# INSTRUCTION MANUAL

# MODEL 4500A

## RF PEAK POWER METER ANALYZER

# MODEL 4400A

## RF PEAK POWER METER

BOONTON

BOONTON ELECTRONICS CORPORATION ■ 25 EASTMANS ROAD ■ PARSIPPANY, NEW JERSEY 07054-0465

TELEPHONE: (973) 386-9696 ■ FAX: (973) 386-9191

Printed in U.S.A.

# INSTRUCTION MANUAL

# MODEL 4500A
# RF PEAK POWER METER ANALYZER

# MODEL 4400A
# RF PEAK POWER METER

This manual covers instrument
serial #s: *ALL*

REV DATE 9/97
MANUAL P/N 98404700A

**BOONTON**
**ELECTRONICS CORPORATION**

**25 EASTMANS ROAD, PARSIPPANY, NJ 07054**
**TELEPHONE: 973-386-9696**
**FAX: 973-386-9191**

# BOONTON ELECTRONICS CORPORATION

## 4400A/4500A MANUAL ADDENDUM

## OPTION 05 - TTL EXTERNAL TRIGGER LEVEL

**(BEC PRODUCT NUMBER 99102115A)**

### *DESCRIPTION*

This option replaces the standard 50 ohm external trigger input(s) and has a resistance of approximately 5k ohms to ground with no pull-up resistor. Most TTL and CMOS sources can easily drive this load. The input is also useful as a general purpose trigger input and is adaptable to ECL logic operating at either +5 volts or –5.2 volts as well as newer low voltage saturated logic families.

### *FUNCTIONAL CHANGES*

With the TTL Trigger Level Option 05 installed, additional menu choices for trigger source will appear in the *Trig>Trig Source* menu box. When selected the 1 EXT TTL and 2 EXT TTL sources automatically set and fix the trigger level to +1.40 volts. The 1 EXT and 2 EXT sources provide a variable trigger level range of -3.00 to +3.00 volts with a 5k ohm load resistance. A minimum signal level of 400 mV peak-to-peak within the trigger level range is required for triggering. To avoid damage DO NOT APPLY a signal level greater than ±30 volts combined DC plus peak AC.

Additional GPIB bus commands have been added to control the trigger source:

TR1EXTTL - selects the number 1 external trigger input BNC connector and forces the trigger level to the TTL threshold +1.40 volts.

TR2EXTTL - selects the number 2 external trigger input BNC connector and forces the trigger level to the TTL threshold +1.40 volts.

### *TESTING*

After installation verify that the *Trig>Trig Source* menu box will select CH1 Int, 1 EXT, 1 EXT TTL and the same for channel 2 if the instrument is a 2 channel configuration. If this test fails the program version may be too old or the instrument is not licensed for this option or both.

Use an ohmmeter to measure the input resistance of the external trigger input(s). The input impedance should be 5.00 kohms ( 4.90 – 5.10 kohms ) .

Using a pulse generator apply a minimum TTL pulse signal (0.8 v to 2.0 v) at 10 kHz to the 1(2) Trigger input BNC connector and to the EXT PULSE input BNC connector on the rear panel simultaneously. Using the *Spcl>Calibrator>Pulse>Source* menu set the calibrator for External pulse modulation and verify that the 1(2) EXT TTL trigger setting will automatically trigger with this source. Change to 1(2) EXT and adjust the trigger level over its range. Using the *Chan1(2)>Extensions>Display>Pwr* and *Chan1(2)>Extensions>Display>Trig* menu settings verify that triggering occurs at approximately 1.4 volts trigger level.

Return the settings *to Chan1(2)>Extensions>Display>Pwr*.

1. Revised 18 DEC 1999

# BOONTON ELECTRONICS CORPORATION

## 4400A/4500A MANUAL ADDENDUM

## OPTION 04 – DELAY by EVENTS TRIGGER QUALIFIER

**(BEC PRODUCT NUMBER 99102114A)**

**Description**

Option 04 adds an additional qualifier to the 4400A/4500A trigger system to permit trigger delay by events rather than by time only, and by a combination of time delay and events delay. This capability is useful for selecting a particular pulse in a burst of pulses.

*Dly by Events* is turned On or Off from the **TRIG**ger menu. This menu selection appears only in instruments that have the necessary hardware installed. When *Trig>Dly by Events* is turned On, the **TRIG**ger menu selections will change to include *Trig>EvTrig Delay* (time) and *Trig>Event Counter*.

The *EvTrig Delay* menu box replaces *Trig Mode* { Auto  Norm }. The selected Auto or Normal setting will remain effective when *Dly by Events* is active. The Auto mode supplies a trace when the trigger condition is not met.

The *EvTrig Delay* time can be set from 1 microsecond to 65.534 milliseconds in 1 microsecond steps and from 66 milliseconds to 65.534 seconds in 1 millisecond steps. To use this mode for burst measurements the delay time is made longer than the burst time, but less than the burst cycle time. This will result in stable triggering of the burst.

The *Event Count* menu box replaces *Holdoff*. When *Dly by Events* is active the sweep generator holdoff is forced to its minimum value and all holdoff functions are performed via the *EvTrig Delay* setting.

The *Event Count* is adjusted from 1 to 65,534 to select the desired trigger event within the burst. The count is not reset at the end of the delay time. If a number larger than the number of events in a single burst is chosen, counting will continue into the next burst.

The source, level and slope qualifications of the trigger are the same for the burst and the events. Any internal or external trigger source may be used. The Model 4400A contains a single sampling time base, but the Events Delay time base is independent of the *Trig Delay* setting in the **TIME** menu. *Time>Trig Delay* along with the *Time>Position* { L M R } trigger position setting can be used to align the trigger point of the expanded delayed trace with the display graticule.

In order to provide maximum flexibility, separate Delay by Events circuits and parameters are maintained for each trigger source group. *Trig>Trig Source* { CH 1 INT, 1 EXT and 1 EXT TTL } sources comprise group 1 and { CH 2 INT, 2 EXT and 2 EXT TTL } make up group 2. Only group 1 sources are functional in single channel configurations.

New GPIB commands control the Delay by Events trigger qualifier. The following commands are trigger source vectored and are directed to the trigger source group ( 1 or 2 ) currently selected. This allows the delay by events conditions to be different for the two measurement channels or the two external trigger sources.

TREVON - select delay by events operation.

TREVOF - select standard trigger system operation.

TREVDELY - set the Events Trigger Delay in seconds. For example, to set the delay to 501 microseconds, send TREVDELY 501E-6. The range is 1E-6 to 65534E-3.

TRECOUNT - set the Event Counter to the desired event number for trigger generation. The range is 1 to 65534.

**Software**

Option 04 operates <u>only</u> with software revision 20000127 and later. This software will detect the presence of the optional circuits and respond by enabling the option 04 features.

To test for this condition, press the TRIG function key. The bottom menu box should be labeled *Dly by Events* and contain selections *ON* and *Off*. If the bottom menu box is blank, the optional circuitry has not been detected.

**Operational Check**

With Option 04 successfully detected, set *TRIG>Dly by Events* to *Off*. Note that the top five menu boxes of function TRIG are the same as for a standard instrument but arranged in a different order. In this mode the trigger system operates in exactly the same manner as a standard instrument without option 04.

Now set *TRIG>Dly by Events* to *On*. Note that the two middle menu boxes change to *EvTrig Delay* and *Event Counter*. In this mode the *TRIG>EvTrig Delay* operates in a similar manner to the Holdoff function in the standard configuration. It sets the minimum time between cycles of the event counting system and is used to obtain synchronization with a pulse burst or equivalent waveform. Once this is done, the *TRIG>Event Counter* is used to select by <u>number</u> the particular event within the burst that triggers the horizontal sweep. The time base can then be expanded and the *Time>Trig Delay* function operates on the <u>expanded</u> waveform as it would normally on a

non-expanded waveform. The two delay functions are completely independent.

In this way you can synchronize and observe the nth pulse of a burst even if its time position is highly variable.

**Testing**

Delay by events requires a pulse burst signal for testing. A TTL test signal consisting of a burst of 50 or so 5 microsecond pulses repeated every 1 millisecond is recommended. Use this signal to externally modulate the 1 GHz Calibrator. Connect a peak sensor to the Calibrator and Channel 1. Use the following setup:

CALIBRATOR

| | |
|---|---|
| Source | Ext |
| Polarity | + |
| Mode | Pulse |
| Level | 0.0 dBm |
| Output | On |

TRIGger

| | |
|---|---|
| Dly by Events | On |
| Trig Slope | + |
| Event Counter | 1 |
| Ev Trig Delay | 800 us |
| Trig Level | -3.00 dBm |
| Trig Source | CH1 Int |

TIME

| | |
|---|---|
| Timebase | 200 us/div |
| Position | M |
| Trig Delay | 0.0 us |

Adjust the Channel 1 controls to view the pulse burst on the display. Change the timebase to 5 us/div and observe the first pulses of the burst beginning in the center of the display. Change the event counter to 2 and observe the second pulse, etc. Slowly advance the Event Counter and verify that you can scan all the way across the burst, pulse by pulse, to the last pulse. Advancing the counter beyond the last pulse displays the first pulse of the next burst, etc.

Repeat the test for Channel 2 in a two channel configuration.

# BOONTON ELECTRONICS

*A subsidiary of Noise/Com a Wireless Telecom Group Company*

# 4400A/4500A MANUAL ADDENDUM

Applies to **Instruction Manual Model 4500A RF Peak Power Meter /Analyzer, Model 4400A RF Peak Power Meter,** Part Number 98404700A, revised 09/97.

Effective for Control Software Revision **20010119** and later.

## 1. NEW FEATURES

### 1.1 Power vs Time Data Output Capability

**Data Buffer Configuration.** Each trace display of the 4400A/4500A Peak Power Meter is derived from a 501-element data buffer. Each element is a measurement value for one pixel in the display. The elements are numbered from zero through 500. The element zero lies on the left-most vertical gridline; the element 500 lies on the right-most gridline and element 250 lies on the center gridline.

**Data Buffer Output.** Data can be output for Channel 1, Channel 2, Channel Math, Reference 1 or Reference 2. The data is adjusted for Vertical Offset, calibration factors and averaging. If the display Units are set to "Linear", power will be in watts with 5 decimal digits of resolution. The real number format is: (-d.ddddE±dd , -dd.dddE±dd or –ddd.ddE±dd where the positive sign is omitted and the exponent is mod 3) watts. Negative power values indicate underflow of the system "zero". If the display units are set to "Log", power will be in dBm (decibels relative to 1 milliwatt) with a resolution of ±0.01 dB. Negative linear power values will return –70.00 dBm excluding offsets if not clipped.

In the Pulse mode with Log units a clip level is applied which establishes a minimum power level based on the sensor calibration data. This level will vary depending upon the sensor type and offsets.

For Channel 1 or 2 in the Trigger View mode the data will be returned in volts with a resolution of ±0.01 volts.

**GPIB Data Buffer Output.** Data buffer contents can be read over the GPIB using the TKFPDISP talk mode command. This is a permanent talk mode that remains in effect until replaced by a different permanent talk mode. TKFPDISP should be followed by an index argument in the range 0 to 500 inclusive that specifies the number of the first element of the data

buffer to be sent. The total number of elements requested is specified by the BUFCOUNT command. BUFCOUNT is followed by an argument in the range 1 to 501 inclusive.

After the TKFPDISP command and argument are sent, the first time the 4400A/4500A is addressed to talk (MTA is sent), a string of comma delimited elements will be returned beginning with the index value followed by BUFCOUNT measurement values as described above.

Each successive time the power meter is addressed to talk the index value will be automatically advanced by BUFCOUNT number of elements and a new string returned. If the incremented pointers reach beyond the last element in the buffer the string is truncated and fewer than BUFCOUNT values are returned. At least one index and one element is always returned.

Example: BUFCOUNT 10
TKFPDISP 0
[MTA] Returns 0, p0, p1, p2, p3, p4 … p9
[MTA] Returns 10, p10, p11, p12, p13 …p19

Example: BUFCOUNT 501
TKFPDISP 0
[MTA] Returns 0, p0, p1, p2 …….p500 (entire buffer)
[MTA] Returns 500, p500 (truncated to one element)

Example: BUFCOUNT 5
TKFPDISP 496
[MTA] Returns 496, p496, p497, p498, p499, p500

The source buffer is selected using the CH1, CH2, CHM, REF1 and REF2 commands. The units are selected using LIN or LOG. TKFPDISP does not interrupt sampling and data collection while sending data. For this reason buffer data will not remain stable during a transfer. If this behavior is undesirable, issue the STOP command to stop data capture when appropriate.

**Front Panel Data Buffer Output.** Front panel data buffer output is controlled by the *Prgm>Trace Data>* menu. An entire data buffer can be sent to a Floppy Disk file, the COM1 serial port or the LPT1 line printer. No index value is used. The delimiter separating data elements can be selected to be a comma, LF (line-feed or NL), CR (carriage return) or ASCII space. This is useful if the data file is to imported directly into a spreadsheet.

*Prgm>Trace Data>Select* A number, nn, 0 to 99 which specifies the filename B4500Ann.TXT. Applies only to Disk output.

*Prgm>Trace Data>Source* Select the data buffer: CH1, CH2, CH Math, Ref1, Ref2

*Prgm>Trace Data>Destination* Select the output device: LPT1, COM1 Disk

*Prgm>Trace Data>Delimiter* Select the data element delimiter: comma, LF, CR, Space

*Prgm>Trace Data>Send Data* Press to START data transfer from buffer to device.

**GPIB Control of Front Panel Output Controls.** In addition to the direct GPIB output via the TKFPDISP and BUFCOUNT commands, the alternate device outputs can also be controlled over the bus. The specific commands are given below.

FILENO Sets the filename B4500Ann.TXT for Disk output where nn is the argument of FILENO. Valid range is 0 to 99.

BUFDELCO Set buffer delimiter to comma.
BUFDELLF Set buffer delimiter to linefeed (NL)
BUFDELCR Set buffer delimiter to carriage return
BUFDELSP Set buffer delimiter to space.
*Note: The delimiters do <u>not</u> apply to data returned using TKFPDISP. They apply only to output using DATASEND.*

DATACOM1 Select COM1 serial port output.
DATADISK Select the floppy disk output with filename selected with FILENO
DATALPT1 Select the printer port LPT1 for output. Delimiter will affect printed format.

DATASOCH1 Select the Channel 1 buffer.
DATASOCH2 Select the Channel 2 buffer.
DATASOCHM Select the Channel Math buffer.
DATASORF1 Select the Reference 1 buffer.
DATASORF2 Select the Reference 2 buffer.
*Note: These source selections do <u>not</u> apply to data returned by TKFPDISP. They apply only to output using DATASEND.*

DATASEND Action command which causes the data buffer to be sent to the selected output.

Unlike output to the GPIB data capture is interrupted during transfers to output ports and the disk.

## 1.2 Statistical Data Output Capability

*The following data output capability is applicable only to the Model 4500A.*

**4500A Statistical Histogram GPIB Output.**

The 4500A statistical histogram count array accumulated by running a CDF, 1-CDF or PDF function is output in two arrays of 4096 values each.

1. The X-axis array consists of up to 4096 power values in watts or dBm as described above. The bus commands LIN and LOG are used to set the units. The Channel 1 array is selected by the command SELDATTBL 6 and the Channel 2 array by SELDATTBL 7. The array is returned by the talk mode command TK-TBLDAT n, where n is the starting index number. The BUFCOUNT command followed by a count argument of 1 to 4096 operates as described above for the TKFPDISP command.

2. The Y-axis array consists of up to 4096 count values. The count value is the number of times the power sample value has fallen within the bin located by the index number. The power in watts or dBm for the center of each bin or index number is given by the X-axis array above. The ratio of each bin count to the total sample count is the probability of occurrence for that bin. The Channel 1 count array is selected by the command SELDATTBL 8 and the Channel 2 count array by SELDATTBL 9. The array is returned by the talk mode command TK-TBLDAT n, where n is the starting index number. The BUFCOUNT command followed by a count argument of 1 to 4096 operates as described above for the TKFPDISP command.

**4500A Front Panel Histogram Output.** Front panel histogram output is controlled by the *Prgm>Trace Data>* menu. An entire data buffer can be sent to a Floppy Disk file, the COM1 serial port or the LPT1 line printer. No index value is used. The delimiter separating data elements can be selected to be a comma, LF (line-feed or NL), CR (carriage return) or ASCII space. This is useful if the data file is to be imported directly into a spreadsheet.

For the Model 4500A, additional source choices will appear in the menu as follows:

| | |
|---|---|
| *Prgm>Trace Data>Source* | Select the data buffer: CH1, CH2, CH Math, Ref1, Ref2,Cal Tbl 1,Cal Tbl 2,Histogram 1,Histogram2 |

Cal Tbl 1 and 2 are the x-axis power value arrays and Histogram 1 and 2 are the count arrays for Channel 1 and 2 respectively. All other front panel controls and associated GPIB commands operate as described above except that the SELDATTBL n, command is used instead of the data source commands.

## 1.3 Screen Saver

A screen saver feature has been added to increase CRT phosphor life in system applications. The display will be dimmed after a specified time during which there is no front panel control activity. The delay time in minutes is set in the *Disp>Scrn Saver Delay* menu window. The delay can be varied from 1 to 240 minutes via the front panel keyboard, knob or increment /decrement buttons. To disable the feature select the increment above 240 which is "infinite" or enter 241 minutes. The CRT display will then remain bright at all times.

The display when dimmed will be restored to full brightness by any front panel key or knob operation. The delay/infinite setting is non-volatile and will be restored after power off/on. There are no related bus commands for this feature.

## 1.4 New Auto-Measure function, EdgeDly

A new auto-measure function, number 15, Edge Delay, has been added to the TEXT display. Edge delay shows the time delay between the left edge of the display window and the first waveform edge of either slope. This allows the display window to be used as a mask to select or exclude portions of a waveform. Trigger delay adjusts the position of the display window with respect to the trigger. Edge Delay should be added as item 15 in Table 4-19. It appears as a selection in the *Meas > Param Meas > Param Top {Middle and Bottom}* menus. The GPIB PARAM___ commands will accept the value 15 as an argument and allow Edge Delay to be selected remotely.

## 1.5 New GPIB Commands

Additions to Table 5-3 Mode 4400A/4500A Talk Mode Bus Mnemonics.

| Code | Arg | Function |
|---|---|---|
| **TKATEMP** | -- | Returns a status flag and the sensor auto-cal temperature for both channels. For the status flag 0 = valid, 1 = no sensor, 2 = no channel card. The auto-cal temperatures are returned in tenths of a degree Celsius (##.#). After returning data the instrument returns to the previous Talk mode.<br>Format: status1, auto-cal temp1, status2, auto-cal temp2<br>Examples: send TKATEMP<br>read 0, 34.0, 0, 39.0 valid both channels<br>or read 0, 34.0, 1, -23.0 valid ch1; no sensor in ch2<br>or read 0, 34.0, 2, -23.0 valid ch1; no ch2 installed |

**TKEJD** -- For the currently selected measurement channel returns a status flag and the time delay in seconds between the left edge of the display window and the first waveform edge of either slope. Trigger delay can be used to move the window with respect to the trigger to select or exclude portions of a long string of pulses. This command works only with TKAMEAS active. After returning data the instrument returns to the previous Talk mode, normally TKAMEAS.

Examples:

| | | |
|---|---|---|
| | send TKAMEAS | send only once |
| | send TKEJD | "send TKEJD read" may be repeated |
| | read 1, 1.163e-7 | valid edge delay in seconds |
| or | read 0, 0 | no valid result |

**TKMMODE** -- Returns a measurement mode run/stop flag, mode identifier and units flag. For the run/stop flag 0 = STOP, 1 = RUN. For the mode identifier 0 = Pulse, 1 = CW**,** 2 = CDF, 3 = 1-CDF, 4 = PDF. For the units flag 0 = log (dBm) and 1 = linear (watts). After returning data the instrument returns to the previous Talk mode.

Examples:

| | | |
|---|---|---|
| | send TKMMODE | |
| | read 1, 0, 0 | running in pulse mode with log units |
| or | read 0, 3, 1 | stopped in 1-CDF mode with linear units |

## 1.6 EOI Only Talk mode Terminator

In the *Util > IEEE-488 > Bus Setup > Talk Term* menu a new choice, **EOI only**, has been added. This allows return strings to be terminated only by the EOI signal of the GPIB, simplifying setup with controllers which use this as their default.

## 1.7 Reference Lines in Linear Units mode

Reference Lines and Reference Line Tracking now work in the Linear as well as Logarithmic units modes. Reference line level readout is always in dBm.

# 2. CORRECTIONS

## 2.1 Sensor Temperature Readings

All previous versions and revisions of Model 4400/4500/4400A and 4500A report sensor temperature approximately 10 degrees Celsius lower than the actual internal sensor temperature. This characteristic has been of little consequence since only delta temperature values are used.

For future developments it is desirable to use the actual internal sensor temperature. Effective with this revision (20010119) all sensor temperatures are the actual internal temperature.

**Compatibility with previous software revisions.** The effect of this change is expected to be minimal because delta temperature values are not affected. Some GPIB programs may use absolute sensor temperature values and expect the old style values for correct operation. To accommodate this situation, a new GPIB command **OLD_TEMP#** has been included in the new revision. To use the old style temperatures, issue the GPIB command OLD-TEMP# in the initialization part of the program. This will cause all sensor temperature values to appear as in earlier revisions. The effect of this command is volatile and it must be re-issued after a power off/on cycle.

## 2.2 Failure to resume in Statistical mode on power up (4500A only).

Some previous software revisions contain a bug that causes statistical measurements not to resume correctly on power up. This occurs only when the instrument was powered down in one of the statistical modes. Normal operation will resume if the menu selection or a GPIB measure mode command is sent. This revision (20010119) corrects the error and under the above conditions statistical measurements will resume automatically at power up.

## 2.3 Inability to use request for service (SRQ) on settled measurement in CW mode with averaging > 1.

In all previous revisions in CW measurement mode with the SRQ mask set to 2, no service request would be issued unless the Averaging was set to 1. This bug has been fixed in this revision (20010119). Since CW is a continuous mode it is necessary to stop and start the measurement in order to obtain repeated service requests with settled readings. Stopping the continuous measurement resets the averaging system. After a restart and after the averaging time has expired, the service request will be issued if the mask for settled measurement (2) is enabled. The serial poll issued by the GPIB controller reads and resets the service request, but not the settled measurement flag. To restore synchronization between the controller and the measurement process, it is necessary to issue the STOP command. When the desired signal is present at the power sensor input, issue the RUN command. When the selected averaging is completed, the service request will again be made. This sequence can be repeated indefinitely.

# BOONTON ELECTRONICS

*a Wireless Telecom Group Company*

## 4400A/4500A MANUAL ADDENDUM

Applies to **Instruction Manual Model 4500A RF Peak Power Meter /Analyzer, Model 4400A RF Peak Power Meter,** Part Number 98404700A, revised 09/97.

Effective for Control Software Revision **20020511** and later.

# 1.0 NEW FEATURES

## 1.1 Peak Sensor Temperature Compensation

When used with a peak sensor that contains a valid temperature compensation table, the model 4400A and 4500A Peak Power Meters can provide temperature compensated power measurements. The default mode for temperature compensation is active. The *Chan n > Calibration>Temp Comp* menu box will be visible with "Sensor Tbl" displayed. To turn off temperature compensation press the menu button and "Off" will be displayed. The "Off" setting is volatile and not preserved through power cycles or major mode changes. If the sensor in use does not have a temperature compensation table the *Temp Comp* menu box will not appear at all.

The *Spcl>Chan n Sensor* report will include the message "Sensor has Temperature Compensation Table" when appropriate. The *Spcl>Servicing>Configuration* report shows TC system status if either channel has a sensor with a valid table. The format of this message
if present is:

TC System Status 1:[err code] #### 2:[err code] ####

The error codes are:

| | | |
|---|---|---|
| 0 | No error. | |
| 145 | TC # of Temps Err | Table parameter error |
| 146 | TC # of Powers Err | Table parameter error |
| 147 | TC Interp Err | Table interpolation error |
| 148 | TC Expand Err | Table expansion error |
| 149 | TC Extend Err | Table extension error |
| 150 | TC Chksum Err | Table read checksum error |
| 151 | TC Table Length Error | |
| 152 | TC Temp Value Err | A temperature value is out of range |

| | | |
|---|---|---|
| 153 | TC Temp Non-mono | A temperature array is non-monotonic |
| 154 | TC Power Value Err | A power value is out of range |
| 155 | TC Power Non-mono | A power array is non-monotonic |
| 156 | TC Corr Value Err | A correction value is out of range |

Use CH1 or CH2 to specify to which channel the following temperature compensation related GPIB commands apply:

| | |
|---|---|
| TCON | Turn on temperature compensation if available. If not, ignore. |
| TCOFF | Turn off temperature compensation. This is a volatile setting if compensation is available. |

## 1.2 Sensor Auto-calibration File Retention

Sensor auto-calibration files are now saved by channel as .AC1 and .AC2 files in non-volatile (flash) memory. This avoids the need to perform auto-cal every time a sensor is removed and replaced by a different one, provided the sensors are known to the channel(s) involved. When a sensor is plugged-in a search is made to find an existing auto-cal file. If one is found, it is installed. If not, the "Needs Auto-cal" message will appear. When auto-cal is performed the existing file is overwritten with the new result. If no previous file exists, one is created. Sensor filenames have the form SEN#####.AC n, where ##### is the serial number and n is the channel number.

The file directory system is expanded to display auto-calibration files in flash memory as well as the previous files on the floppy disk. The *Utility>Disk>Flash Disk* path lists sensor auto-cal files by channel. The *Select File <>* menu contains a sequence number which refers to the position of the file in the list. The selected file is shown in RED and may be deleted by pressing the menu button next to the "Delete" box. Deletion of files must be confirmed or cancelled.

There are no GPIB operations on the file directory.

## 1.3 Color *.bmp File of Display

The Hardcopy section now includes a color *.bmp file of the current display that can be saved to the floppy disk, sent to the COM1 port or the GPIB. To select this feature set the *Util>Hardcopy>Device* menu to "Plotter". Then select *Util>Hardcopy>Model* ".BMP". Choose the *Plot Label*, *Output Port* and *File Select* number if the output is the floppy disk. *Graph & Text* is not applicable. Note that the "IEEE-488" output selection applies to the listen only (lon) GPIB addressing mode only. For controller directed GPIB output

see below. Press the PLOT key to send the file to the selected output. The .bmp extension is added to the floppy disk file directory to allow viewing the filenames saved on disk. The GPIB commands for controller directed return of the .bmp file contents are:

Send the sequence PLOTTER PLOT.BMP to select the bit-map mode.
Send TKPLOT to set the talk mode that returns the file when addressed to talk.

The GPIB commands to send the plot file contents to an output other than the GPIB are:

Send the sequence PLOTTER PLOT.BMP to select the bit-map mode.
Send PLOTSER1, PLOTCOM1, PLOTLPT1 or PLOTDISK to select the output.
{Use PLOT488 only with the front panel PLOT key manually to send in the talk only (ton) mode to a listen only (lon) device}.
For PLOTDISK send FILENO ## to select a filename.
Send PLOT to simulate pressing the PLOT key to send the file to the selected output.

## 1.4 External Trigger Input Calibration

A provision to zero and calibrate the external trigger inputs has been added to provide better accuracy for voltage measurements made with the trigger inputs. The following procedure is used to calibrate each external trigger input:

Set *Time>Timebase* to "5 ms/Div"
Set *Trig>Trig Mode* to "Auto"
Select the external trigger input in the *Trig>Trig Source* menu corresponding to the selected measurement channel (CH1 to 1EXT or CH2 to 2EXT).
Set the *Chan#>Extensions>Display* to "Trig" (Trigger View Mode)
Set the *Chan#>Vert Scale* to 1.00 V/Div
Set the *Spcl>Servicing>Cal Mode* "On"

With *Cal Mode* "On" two boxes labeled *Ext Trig Zero* and *Ext Trig Cal* will appear in the *Chan#>Extensions* menu. *Ext Trig Zero* will have a bright "Start" label.

With no input to the selected external trigger input, press the menu button for *Ext Trig Zero* "Start". The input will be zeroed and the *Ext Trig Cal* "Start" label will be bright.

With +3.00 volts applied to the selected external trigger input, press the menu button for *Ext Trig Cal* "Start". The input will be calibrated for 3 divisions of deflection at 1 V/Div.

Set the *Spcl>Servicing>Cal Mode* "Off"

The results of the calibration are stored in non-volatile memory with file extension .TRV. Absent a file, default data is supplied automatically and simulates the existing software. External trigger level calibration is not available on the GPIB.

### 1.5 UNDIM Command.

A GPIB command, UNDIM, is added to reset the screen saver without touching the panel or re-loading the color table. This is helpful in remotely controlled applications.

## 2.0 Changes

### 2.1 Instrument Setup Save/Recall change.

The instruments setup save and recall system has been modified to save a binary file instead of an ASCII file. The binary file is smaller and more comprehensive and is identical to the internal save/recall format. The new file has the extension .ISU. For customers with existing .INS files the ability to read an .INS file is still present, but new features will not be available using this method. Existing files should be converted by reading the .INS files and saving them as .ISU. The file directory is modified to display .ISU files. The GPIB commands are not affected.

### 2.2 GPIB command *OPT? change.

An installed hardware options list has been appended to the *OPT? GPIB command format previously used. For example, a single channel instrument with Option 04 hardware installed and a sensor plugged-in returns:

1,1,0,0,4

### 2.3 Configuration report change.

Installed options are now identified in the Configuration Report. For example:

The *Spcl>Servicing>Configuration Report* for Option 04 installed reports:

Opt 04 – Trigger Delay by Events installed

### 2.4 Sensor Temperature Reporting change.

Sensor auto-cal temperature and current temperature readings have been moved from the *Utility>Report* to the *Spcl>Ch 1 Sensor>Report* and *Spcl>Ch 2 Sensor>Report*.

## 3.0 Corrections

1. Remove glitches that occur when in Triggered mode (as opposed to Auto) and certain commands are executed. Also, measurement traces can now be moved and re-scaled when Waiting for Trigger on the slow time bases.

2. Calculate the auto-measure parameter “OFF TIME”. This function has always been enabled but there was no calculation method included.

3. Correct an overflow error in the cal table expansion that overwrites the first position of the channel 2 table when channel 1 is expanded. This may cause the channel 2 PDF to not appear.

4. GPIB command TKBMEAS now reports the sign of Pk/Avg ratio correctly.

5. Marker math mode changes now occur immediately even in wait for trigger.

6. When both markers are in trigger view mode the marker math functions MK1-MK2, MK2-MK1, MAX-MIN and MIN-MAX are computed as voltage difference and appear in the middle window with voltage difference units. The PK/AVG mode is not recognized in trigger view mode but is not an error. This correction also appears in the parameters of GPIB commands TKMEAS, TKBMEAS and TKUNITS when appropriate.

7. The trigger pointer is now removed when the direct set of a statistical mode occurs.

8. Restore the legacy GPIB command MKDELTA to set the marker math to power difference in the linear units mode only. This command was deleted by mistake in the “A” series.

9. Update the RUN/STOP message in the recall stored setup function to avoid out of sync messages.

10. Change the linear mode reference lines to track vertical offset in “divisions” rather than watts, which is incorrect.

Revised 20020513

# SAFETY SUMMARY

The following general safety precautions must be observed during all phases of operation and maintenance of this instrument. Failure to comply with these precautions or with specific warnings elsewhere in this manual violates safety standards of design, manufacture, and intended use of the instrument. Boonton Electronics assumes no liability for the customer's failure to comply with these requirements.

## THE INSTRUMENT MUST BE GROUNDED

To minimize shock hazard the instrument chassis and cabinet must be connected to an electrical ground. The instrument is equipped with a three conductor, three prong a.c. power cable. The power cable must either be plugged into an approved three-contact electrical outlet or used with a three-contact to a two-contact adapter with the (green) grounding wire firmly connected to an electrical ground in the power outlet.

## DO NOT OPERATE THE INSTRUMENT IN AN EXPLOSIVE ATMOSPHERE

Do not operate the instrument in the presence of flammable gases or fumes.

## KEEP AWAY FROM LIVE CIRCUITS

Operating personnel must not remove instrument covers. Component replacement and internal adjustments must be made by qualified maintenance personnel. Do not replace components with the power cable connected. Under certain conditions dangerous voltages may exist even though the power cable was removed, therefore; always disconnect power and discharge circuits before touching them.

## DO NOT SERVICE OR ADJUST ALONE

Do not attempt internal service or adjustment unless another person, capable or rendering first aid and resuscitation, is present.

## DO NOT SUBSTITUTE PARTS OR MODIFY INSTRUMENT

Do not install substitute parts or perform any unauthorized modifications or the instrument. Return the instrument to Boonton Electronics for repair to ensure that the safety features are maintained.

## SAFETY SYMBOLS

This safety requirement symbol (located on the rear panel) has been adopted by the International Electrotechnical Commission, Document 66 (Central Office) 3, Paragraph 5.3, which directs that an instrument be so labeled if, for the correct use of the instrument, it is necessary to refer to the instruction manual. In this case it is recommended that reference be made to the instruction manual when connecting the instrument to the proper power source. Verify that the correct fuse is installed for the power available.

The CAUTION symbol denotes a hazard. It calls attention to an operation procedure, practice, or the like, which, if not correctly performed or adhered to, could result in damage to or destruction of part or all of the equipment. Do not proceed beyond a CAUTION symbol until the indicated conditions are fully understood and met.

The NOTE symbol is used to mark information which should be read. This information can be very useful to the operating in dealing with the subject covered in this section.

The HINT symbol is used to identify additional comments which are outside of the normal format of the manual, however can give the user additional information about the subject.

# Contents

**Paragraph** **Page**

# Illustrations

| Figure | | Page |
|---|---|---|

# Tables

| Table | | Page |
|---|---|---|

# 1

# General Information

This instruction manual provides you with the information you need to install, operate and maintain the Boonton mODEL 4400A RF Peak Power Meter and the Model 4500A RF Peak Power Meter Analyzer. Section 1 is an introduction to the manual and the instrument.

## 1.1 Organization

The manual is organized into seven sections and three Appendices, as follows:

**Section 1 - General Information** presents summary descriptions of the instrument and its principal features, accessories and options. Also included are specifications for the instrument and the 56000 Series sensors.

**Section 2 - Installation** provides instructions for unpacking the instrument, setting it up for operation, connecting power and signal cables, and initial power-up.

**Section 3 - Getting Started** describes the controls and indicators and the initialization of operating parameters. Several practice exercises are provided to familiarize you with essential setup and control procedures.

**Section 4 - Operation** describes the display menus and procedures for operating the instrument locally from the front panel.

**Section 5 - Remote Operation** explains the command set and procedures for operating the instrument remotely over an IEEE-488 bus.

**Section 6 - Application Notes** describes automatic measurement procedures and presents an analysis of measurment accuracy. Definitions are provided for key terms used in this manual and on the screen displays.

**Section 7 - Maintenance** includes procedures for installing software and verifying fault-free operation.

**Appendix A - Error Messages** defines the messages that are displayed when errors occur.

**Appendix B - Plotter Operation** describes how to record the Model 4400A/4500A output on a plotter or printer.

**Appendix C - Warranty and Repair Policy** states the policies governing the return and replacement of modules and instruments during and after the warranty period.

**Appendix D - Sensor Performance Specifications**

**Appendix E - End User License Agreement**

## 1.2 Description

The Model 4500A RF Peak Power Meter Analyzer and the Model 4400A Peak Power Meter are new generation RF power meters. These instruments, when operated with 56000 series power sensors, comprise the most versatile power measuring systems available, with capability to make over 25 different measurements on captured signals. The instruments can measure the peak and average power of signals in the frequency range of 30 MHz to 40 GHz with a dynamic range of over 60 dB.

The two models provide performance which previously required multiple instruments, and they provide that performance faster, with increased accuracy; while adding functionality not previously available. The speed is visible during the screen update process, waveform response rate and the IEEE-488 performance. The Model 4400A and Model 4500A are the fastest power meters available with the ability to talk two marker measurements over eighty times a second.

The Model 4400A has two measurement modes - pulse power and CW power. The Model 4500A adds to these a third mode - statistical power. Each mode is targeted towards a specific type of measurement.

In the pulse power mode the instrument functions as an enhanced peak power meter. It can be configured as a single or dual channel instrument. This mode provides the functionality of an random repetitive sampling oscilloscope for viewing the RF envelope of signals in the frequency range of 30 MHz to 40 GHz. Its accuracy approaches that of average power meters, but with the ability to capture power versus time data. With the requirement of an internal or external trigger event it can automatically measure up to 14 characteristics of the RF envelope. These are peak power, average power, pulse width, risetime, falltime, overshoot, pulse period, pulse repetition rate, duty cycle, top amplitude, bottom amplitude, offtime, and the delay between two RF pulses or an RF pulse with an external trigger signal. In addition to the automatic measurements, the instrument offers a powerful set of marker measurements which includes the ability to make marker measurements at full accuracy, independent of vertical scale or offset. This is possible because of the use of logarithmic amplifiers, and a 12 bit analog to digital converter, which provide rangeless operation. In addition, the markers can be used to define regions of the waveform for analysis. This analysis includes average power of a portion of the waveform, minimum power, and maximum power.

In the CW mode the instrument's low end performance is improved by approximately 10 dB, which provides a signal measurement range of up to 70 dB (-50 to +20 dBm). This is accomplished by automatically limiting the input bandwidth of the instrument and using a second, low bandwidth internal measurement channel.

In the statistical mode the Model 4500A offers many new features. This mode does not require a trigger event to make measurements like the pulse power mode. The instrument continuously samples the RF signal at approximately half a million samples per second, without discarding or losing any data. All of this data can be processed statistically to determine peak power, average power, minimum power, peak to average power ratio, and dynamic range, while reporting the sampling time, total samples captured and the statistical tolerance of the data. In addition, this data can be displayed using three different graphical representations. These are probability density function (PDF), cumulative distribution function (CDF), and one minus cumulative distribution function (1-CDF). This mode is very useful in applications where the signal is random in nature; such as digital communication and multiple carrier systems.

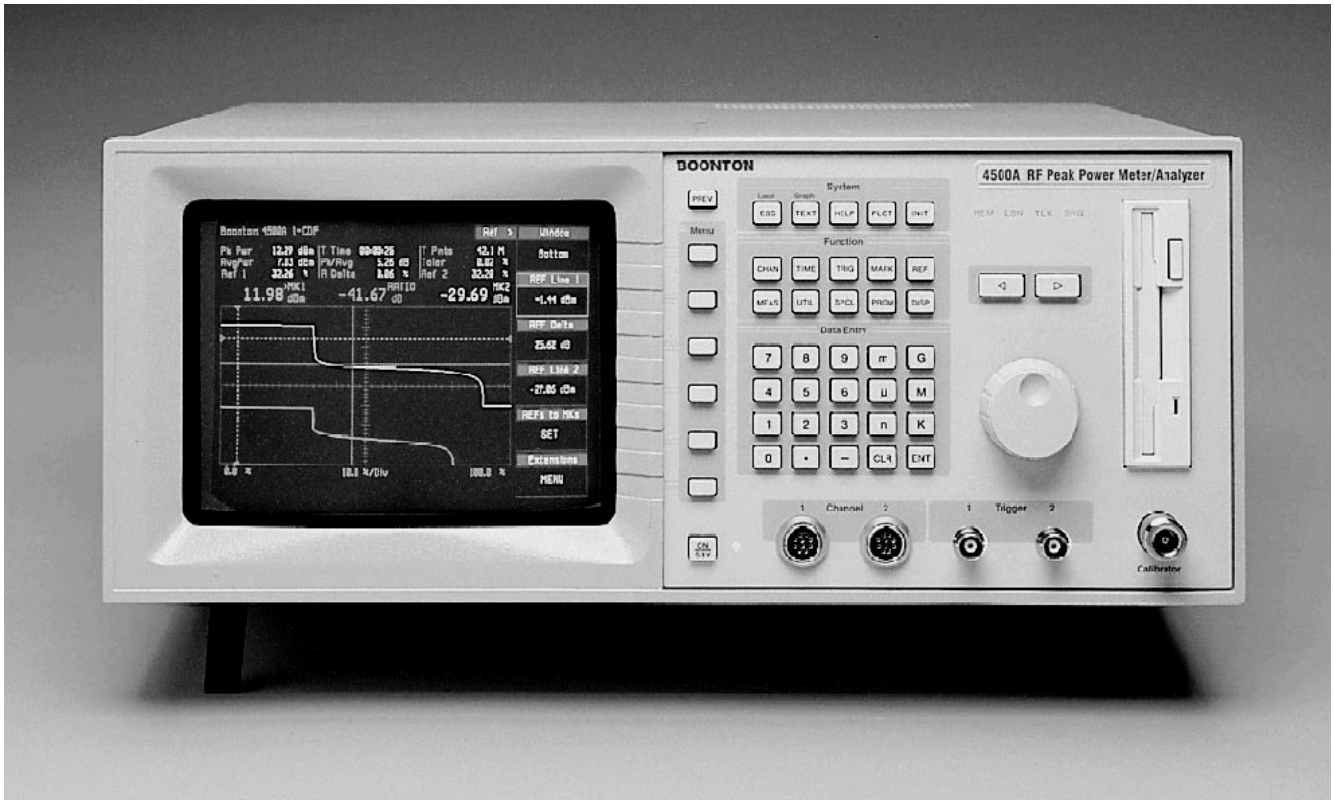


Figure 1-1. Model 4500A RF Peak Power Meter Analyzer

## 1.3 Features

*Software Programmable*

A dedicated microprocessor performs random repetitive sampling, shaping, filtering, calibration, offset compensation, and conversion of the RF signal. The control software is stored in EEPROM and is updated, as necessary, by loading upgrade software from a standard DOS 3.5" diskette. Software can be loaded in the field by inserting the diskette in the front panel disk drive and turning the instrument on. There is no need to remove the cover or change parts.

*Auto-Setup*

The instrument will automatically select a vertical scale, vertical offset, timebase, holdoff and trigger level to display at least one pulse period at full amplitude of the full waveform.

*Menu-Driven Operation*

Setup and control of the instrument is menu-driven to simplify operation. User-selected parameters appear in a menu to the right of the waveform, together with applicable variables. Selections are arranged opposite adjacent “softkeys” that select parameters and activate data entry controls. Required numerical values are entered through the keypad, arrow keys or spin knob.

*Help Displays*

Context-sensitive HELP screens are accessible at the touch of a key for all function menus. The HELP information guides the user step-by-step to assure accurate instrument setup.

| | |
|---|---|
| *High-Resolution Color Display* | Waveforms, control menus, measurement values and related text are displayed on a 7-inch diagonal, 640 x 480 pixel, VGA color CRT. Display element colors are user-selectable to maximize clarity. |
| *Dual Independent Channels* | When equipped with the optional second measurement channel, the instrument can display two pulsed signals or a pulsed signal on one channel and a trigger waveform on the other. Each channel is calibrated and all channel parameters are channel-independent. |
| *Balanced Diode Sensors* | The balanced diode sensor configuration provides high sensitivity and even-order harmonic suppression. Low VSWR minimizes mismatch errors. Frequency Calibration factors traceable to NIST standards are stored in on-board EEPROMs and downloaded to the instrument. A thermistor in each sensor tracks temperature variations. |
| *Waveform Persistence* | The waveform display can be placed in the infinite persistence mode. |
| *Built-In Precision Calibrator* | A 1 GHz calibrator, traceable to NIST, enhances measurement reliability. The user-selectable automatic calibration routine calibrates the sensor and instrument in steps over the full dynamic range. |
| *Adjustable Averaging* | Random repetitive sampling and averaging with an exponential filter (performed on each point of the waveform) reduce noise contribution and provide accurate, stable measurements. The number of repetitions to be averaged can be adjusted to the smallest value that achieves the desired noise suppression, thereby avoiding excessive averaging delays. |
| *Automatic Waveform Analysis* | The instrument can measure fourteen pulse parameters related to power, time and/or frequency. All programmed measurements are made automatically and displayed in text mode. Measurement information is available directly, eliminating the need for interpretation by the user. |
| *Single-Shot Measurements* | The 1 MHz sampling rate yields a 100 kHz single-shot bandwidth (10 samples per pulse) for capturing and analyzing infrequent events. |
| *Disk Drive* | The disk drive uses a 1.44MB DOS compatible 3.5 inch diskette. The instrument can store its setup configuration, reference waveforms, screen printouts, or screen plots to the disk. The instrument setups are stored as ASCII files that use the IEEE-488 bus commands. The waveform can be recalled into a reference channel and used for channel math or marker measurements. The print or plot files can be read by a PC and output to a device connected to the computer. |
| *Hard Copy Output* | A permanent copy of the instrument's screen can be spooled to a plotter or printer. The output can be sent to the serial, parallel or IEEE-488 ports or to disk. |
| *Self-Test and Diagnostics* | An automatic self-diagnostic routine can be initiated at any time to isolate and identify a faulty module. Error reports direct the user to the instrument module or sensor that requires replacement. |
| *IEEE-488 Bus Control* | All instrument functions except power on/off can be controlled remotely via the parallel IEEE-488 bus interface. Setup of interface parameters is menu driven; front panel indicators keep the user informed of bus activity. |

*Stored Configurations* For applications in which the same instrument configurations are used repetitively, up to ten complete setups can be stored and recalled at the touch of a key.

## 1.4 Accessories

The table lists optional accessories and sensors which may be ordered from Boonton Electronics.

**Table 1-1 Accessories for the Model 4500A/Model 4400A**

| Selection | Part Number | Description | |
|---|---|---|---|
| **Standard** | | | |
| | 568106000 | Line Cord | |
| | 96401201A | Fuse Kit, Metric | |
| | 54554900A | Fuse, USA (1.6A 250V SLO-BLO) | |
| | 98404700A | Instruction Manual | |
| | 53304500A | Operating Software (on 1.44M diskette) | |
| | 95105501A | Type N to SMA Adaptor (for 56X26 and 56X40 sensors) | |
| **Optional** | | | |
| | 95005591B | Rack Mounting Bracket | |
| | 95600005A | Sensor Cable - 5 ft. | |
| | 95600010A | Sensor Cable - 10 ft. | |
| | 95600020A | Sensor Cable - 20 ft. | |
| | 95600025A | Sensor Cable - 25 ft. | |
| | 95600050A | Sensor Cable - 50 ft. | |
| | 95005592B | Rack Handle Kit | |
| | 95600201A | Trigger Delay Calibration Adapter | |
| | 95600501A | 4500 Driver for VEE | |
| | 95600601A | 4500 Driver for LABVIEW | |
| **Sensor Options** | | Frequency (GHz) | Pulse Power Range (dBm) |
| | 56218 | 0.03 to 18 | -24 to +20 |
| | 56318 | 0.5 to 18 | -24 to +20 |
| | 56326 | 0.5 to 26.5 | -24 to +20 |
| | 56340 | 0.5 to 40 | -24 to +20 |
| | 56418 | 0.5 to 18 | -34 to +5 |
| | 56518 | 0.5 to 18 | -40 to +20 |
| | 56526 | 0.5 to 26.5 | -40 to +20 |
| | 56540 | 0.5 to 40 | -40 to +20 |

56018 Sensors are no longer available, but are compatible with the Model 4400A/4500A.

## 1.5 Optional Configurations

-01 Second measurement channel; the channel, trigger and calibrator connectors are located on the front panel.

-02 One measurement channel; the channel, trigger and calibrator connectors are located on the rear panel.

-03 Second measurement channel; the channel, trigger and calibrator connectors are located on the rear panel.

## 1.6 Specifications

Performance specifications for the Model 4400A/4500A are listed in Table 1-2.
Performance specifications for the Model 56218 Sensor are listed in Appendix D.
Performance specifications for the Model 56218-S/1 Sensor are listed inAppendix D.
Performance specifications for the Model 56218-S/3 Sensor are listed in Appendix D.
Performance specifications for the Model 56218-S/4 Sensor are listed in Appendix D.
Performance specifications for the Model 56218-S/5 Sensor are listed in Appendix D.
Performance specifications for the Model 56318 Sensor are listed in Appendix D.
Performance specifications for the Model 56318-S/1 Sensor are listed in Appendix D.
Performance specifications for the Model 56326 Sensor are listed in Appendix D.
Performance specifications for the Model 56340 Sensor are listed in Appendix D.
Performance specifications for the Model 56340-S/1 Sensor are listed in Appendix D.
Performance specifications for the Model 56418 Sensor are listed in Appendix D.
Performance specifications for the Model 56518 Sensor are listed in Appendix D.
Performance specifications for the Model 56518-S/1 Sensor are listed in Appendix D.
Performance specifications for the Model 56526 Sensor are listed in Appendix D.
Performance specifications for the Model 56540 Sensor are listed in Appendix D.
Cable length effects are listed in Appendix D.

## Table 1-2 Model 4400A/4500A Performance Specifications*

| Parameter | Specification |
|---|---|
| **Sensor Inputs** | |
| Frequency Range | 30 MHz to 40 GHz, selectable[1] |
| Pulse Measurement Range | -40 to +20 dB[1] |
| CW Measurement Range | -50 to +20 dB[1] |
| Risetime (10 - 90%) | See sensor specifications |
| Single-Shot Bandwidth | 100 kHz (based on 10 samples per pulse) |
| Pulse Repetition Rate | 25 MHz |
| Minimum Pulse Width | 30 ns |
| **Vertical Scale** | Pulse and Statistical Mode |
| Relative Offset Range | |
| Log | ±99.99 dB |
| Linear | 0 to 99 divisions |
| Vertical Scale | |
| Log | 0.1 to 20 dB/div in 1-2-5 sequence[2] |
| Linear | 1 nW to 50 MW in 1-2-5 sequence[2] |
| **Time Base** | |
| **Pulse Mode** | |
| Time Base Range | 10 ns to 1 s/div |
| Time Base Accuracy | 0.01% |
| Time Base Resolution | 200 ps |
| **Statistical Mode (Model 4500A only)** | |
| X-Axis | .1, .2, .5, 1, 2, 5, 10% per division |
| Percent Offset Range | 0 - 99% (x-axis dependent) |
| Percent Resolution | 0.002% |
| **Trigger** | |
| **Pulse Mode Only** | |
| Trigger Source | Channel 1 internal or external; or Channel 2 internal or external[5] |
| Trigger Slope | + or - |
| Pre-Trigger Delay: | |
| Time Base Setting | Delay Range |
| 10 ns to 50 µs | -500 µs |
| 100 µs to 1 sec | -10 div |
| Post-Trigger Delay: | |
| Time Base Setting | Delay Range |
| 10 ns to 1 µs | 10,000 div |
| 2 µs to 50 µs | 2 ms |
| 100 µs to 1 sec | 200 div |
| Trigger Delay Resolution | 0.02 divisions |
| Trigger Holdoff Range | 65 ms |
| Trigger Holdoff Resolution | 62.5 ns |
| Trigger View | |
| Vertical Scale | 0.1V to 1V in 1-2-5 sequence |
| Relative Offset | ±3 volts |
| Internal Trigger Range | -27 to +20 dBm[1] |
| External Trigger Range | ±3 volts |
| External Trigger Input | 50 ohms, dc coupled |

## Table 1-2 Model 4400A/4500A Performance Specifications *(continued)*

| Parameter | Specification |
|---|---|
| **Statistical Processing (Model 4500A only)** | |
| **CDF, 1-CDF, PDF Modes** | |
| Sampling Rate | 500,000 samples per second |
| Number of Sample Bins | 4096 |
| Size of Sample Bins | 32 bits |
| Bin Power Resolution | <0.02 dB[1] |
| Percent Resolution | 0.002% |
| Display Modes | CDF, 1-CDF in log or linear scales and plots normalized to average power<br>PDF log or linear scales and plots normalized to average power |
| Automatic Measurements | Peak max. power, average power, peak to average ratio, minimum power, total samples, sampling time, confidence band of measurements, dynamic range, and tolerance. |
| **Calibration Source** | |
| Operating Modes | CW, internal or external pulse |
| Frequency | 1.024 GHz ± .01% |
| Level Range | -40.0 to +20.0 dBm |
| Resolution | 0.1 dB |
| Output SWR (Refl. Coeff.) | 1.20, (0.091)[3] |
| Accuracy (NIST traceable)[4] (-30 to +20 dBm) | |
| Absolute | ±0.065 (1.5%) at 0 dB and 25°C, ±0.001 dB per °C |
| Linearity | +0.03 dB per 5 dB |
| Internal Pulse Period | 100 µs, 1 ms or 10 ms |
| Internal Pulse Duty Cycle | 10% to 90% in 10% increments |
| Internal/External Pulse Polarity | + or - |
| Connector | Type N |
| **Power Measurement Accuracy** | |
| Measurement Uncertainty | Total measurement uncertainty (worst case) is the sum of the calibrator uncertainty, source mismatch error, sensor calibration factor uncertainty, sensor temperature coefficient, sensor shaping, noise and drift. |
| Mismatch Uncertainty | ±2 x sensor reflection coefficient x source reflection coefficient x 100 % |

## SUPPLEMENTAL INFORMATION

| | |
|---|---|
| **Measurement Characteristics** | |
| Measurement Technique | Stat Mode (4500A only) : Continuous sampling 0.5 M Samples /sec<br>Power Mode: Random repetitive sampling system which provides pre- and post-trigger data |
| Maximum Sample Rate | 1 MHz |
| Memory Depth | 4 K |
| Vertical Resolution | 0.025%, 12 bit A/D converter |
| Waveform Averaging | 1 to 10,000 samples per data point |
| Waveform Storage | Two reference waveforms in internal non-volatile memory |
| Trigger Channel Bandwidth | > 30 MHz typical |

## Table 1-2 Model 4400A/4500A Performance Specifications *(continued)*

| Parameter | Specification |
|---|---|
| **Sensor Characteristics** | |
| Power Detection Technique | Dual diode with selectable detector bandwidth |
| Log Amplifier | The logarithmic amplifier in the sensor enables the instrument to measure and analyze changes in power exceeding 60 dB in a single display range. |
| Internal Data | Sensor calibration factors, frequency range, power range, sensor type, serial number and other sensor dependent information are stored in EEPROM within the peak power sensor. |
| Sensor Cable | The sensor cable is detachable from both the sensor and instrument. The standard cable length is 5 feet. Other cable lengths are 10 ft., 20 ft., 25 ft., and 50 ft. |
| **Rear Panel Connections** | |
| External Calibrator Pulse Input | Provides a means of applying an external TTL level signal to control the pulse rate and duty cycle of the calibrator output. (50 ohm input impedance) |
| IEEE-488 Interface | Complies with IEEE-488-1978. Implements AH1, SH1, T6, LE0, SR1, RL1, PP0, DC1, DT1, C0, and E1 |
| RS-232 Interface 1 | Serial Printer / Plotter interface |
| RS-232 Interface 2 | Diagnostic interface |
| Parallel Port | Parallel Printer/plotter interface |
| Optional Connectors[5] | Rear Panel<br>Channel 1 and 2, Trigger 1 and 2, calibrator output |
| **Physical and Environmental** | |
| General | Manufactured to the intent of MIL-T-28800E, Type III, Class 5, Style E |
| Disk Drive | 3.5", 1.44MB (DOS compatible) |
| Display | VGA compatible 7" diagonal color CRT with 640 x 480 pixel resolution. Waveform display area resolution is 501 x 281. |
| Operating Temperature | 0 to 50°C |
| Storage Temperature | -40 to 75°C |
| Humidity | 95% ± 5% maximum (non-condensing) |
| Altitude | Operating: 10,000 Feet (3000 Meters)<br>Non-operating: 15,000 Feet (4600 Meters) |
| Power Requirements | 90 to 260 VAC, 47 to 440 Hz, 200 VA maximum |
| Dimensions | 17.25 inches (43.8 cm) wide, 7 inches (17.8 cm) high, 22 inches (55.9 cm) deep |
| Weight | 38 lbs. (17.2 kg.) with second channel installed |
| Hard Copy Output | The screen can be output to a printer or plotter on the RS-232, parallel, IEEE-488 devices, or to a file on disk.<br>HPGL Plotters: HP7475 HP7470 ATT 435<br>Printers: ThinkJet LaserJet II |
| **Sensors** | |
| See Appendix D or the Boonton Electronics Sensor Data Manual for detailed specifications for Boonton Peak Power Sensors. | |

**Table 1-2 Model 4400A/4500A Performance Specifications** *(continued)*

| Parameter | Specification |
|---|---|

**Notes**

[1]Sensor dependent
[2]Sensitivities are decreased by a factor of two in the split-screen mode.
[3]CW mode
[4]CW mode, 0 to 40º C
[5]Available with optional second channel.
*Specifications subject to change without notice.

# 2

# Installation

This section contains unpacking and repacking instructions, power requirements, connection descriptions and preliminary checkout procedures.

## 2.1 Unpacking & Repacking

The Model 4400A/4500A is shipped complete and is ready to use upon receipt. Figure 2-1 shows you the various pieces included in the packaging and the order in which they are loaded into the container.

**Note**

Save the packing material and container to ship the instrument, if necessary. If the original materials (or suitable substitute) are not available, contact Boonton Electronics to purchase replacements. Store materials in a dry environment. Refer to the Physical and Environmental Specifications in Table 1-2. for futher information.

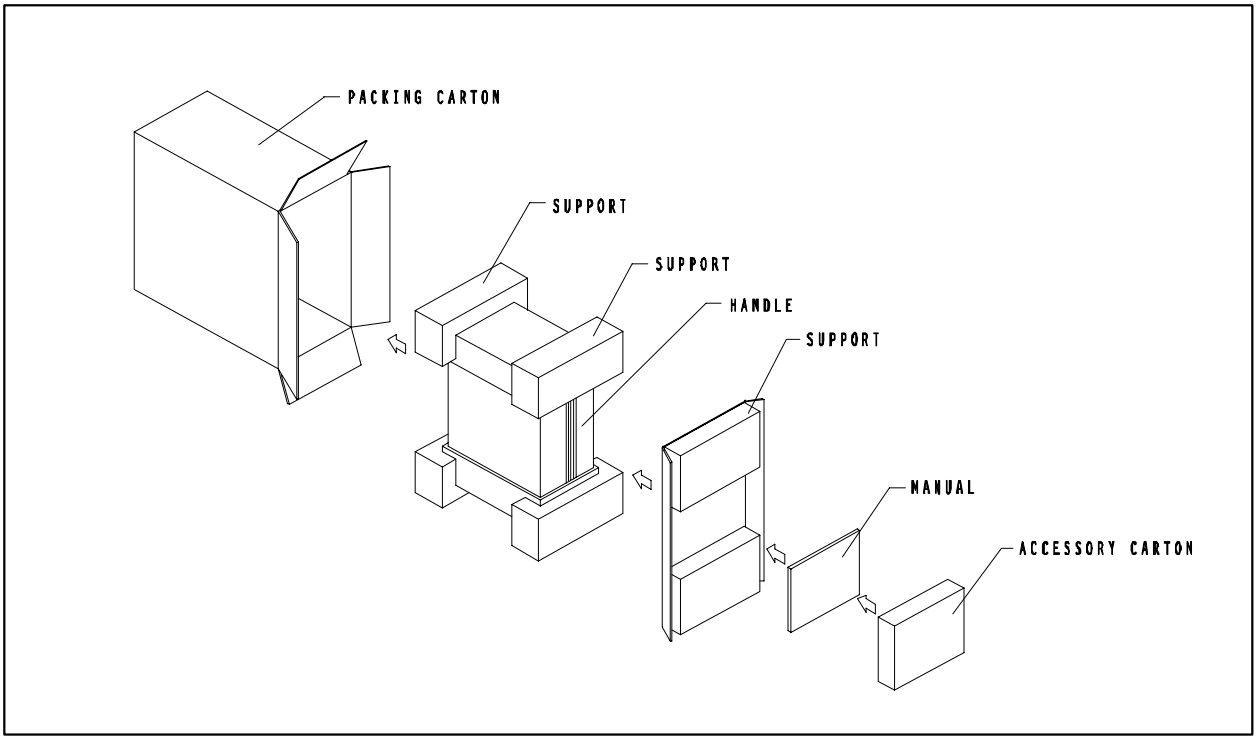


Figure 2-1. Packaging Diagram

**Table 2-1 Model 4400A/4500A Packing List**

| INSTRUMENT | SENSORS (packaged separately) |
|---|---|
| Model 4400A RF Peak Power Meter | Sensor |
| -or- | |
| Model 4500A RF Peak Power Meter/Analyzer | Sensor |
| Power Cord | Sensor Cable, 5-foot |
| Fuse Kit, metric | |
| Fuse, USA (1.6A 250V SLO-BLO) | |
| Operating Software (on 720k, 3.5" diskette) | Type N to SMA Adapter (for 56X26 and 56X40 Sensors) |
| Instruction Manual | |

For bench-top use, choose a clear, uncluttered area. Ensure that there is at least 6" of clearance at each air vent on the top and sides of the case. Pull-down feet are located on the bottom of the instrument. Rack mounting instructions are provided with the (optional) rack mount kit.

## 2.2 Power Requirements

The Model 4400A/4500A is equipped with a switching power supply that permits operation from a 90 to 260 volt, 47 to 440 Hz, single-phase, AC power source. Power consumption is 200 VA maximum. For metric fuse sizes, use the metric fuse kit supplied.

Connect the power cord supplied with the instrument to the power receptacle on the rear panel. See Figure 3-2.

**Cautions**

Before connecting the instrument to the power source, make certain that a 1.6 ampere slo-blow fuse is installed in the fuse holder on the rear panel.

Before removing the instrument cover or any of the circuit boards, position the power switch to off (0 = OFF; 1 = ON) and disconnect the power cord.

## 2.3 Connections

### Sensor(s)

Connect the sensor that covers the frequency range of the measurement to the CHANNEL 1 sensor connector on the front (Standard) or rear (Optional) panel, as follows. Connect the sensor to the sensor cable by aligning the red mark on each part and pressing the connectors together firmly. Connect the sensor cable to the CHANNEL 1 Input, holding the red mark on the cable connector up. For two-channel measurements, use the same procedures to connect the second sensor to the CHANNEL 2 Input.

**Note**

If the sensor connector is not a Type N, install the appropriate adapter (from the accessories kit) on the calibrator output connector..

**Trigger**

For measurements requiring external triggering, connect the external trigger signal to TRIGGER Input 1. For two-channel measurements requiring two external triggers, connect the Channel 2 trigger signal to TRIGGER Input 2.

**Printer / Plotter**

If a printer or plotter is to be used to record measurement data, connect the device to the RS-232 connector 1, parallel port, or IEEE-488 port on the rear panel, with an appropriate cable.

**Maintenance Terminal**

If a (user furnished) remote terminal is to be used for maintenance purposes, connect the terminal to RS-232 Connector 2 on the rear panel.

**IEEE-488**

If the instrument is to be operated remotely, using the IEEE-488 bus, connect the instrument to the bus using the rear panel IEEE-488 connector and appropriate cable.

## 2.4 Preliminary Check

The following preliminary check verifies that the instrument is operational and has the correct software installed. It should be performed before the instrument is placed into service. To perform the preliminary check, proceed as follows:

1. Connect the AC power cord to a suitable AC power source.

2. Press the upper half (marked "1") of the power switch mounted on the rear panel immediately above the power receptacle.

3. If the ON/SBY LED on the front panel is not lit, press the ON/SBY key.

4. After a self-check, the instrument will execute the application program. A brief initialization screen should appear, which shows the instrument name, model number, and software version. After several moments a screen similar to Figure 2-2 should be displayed.

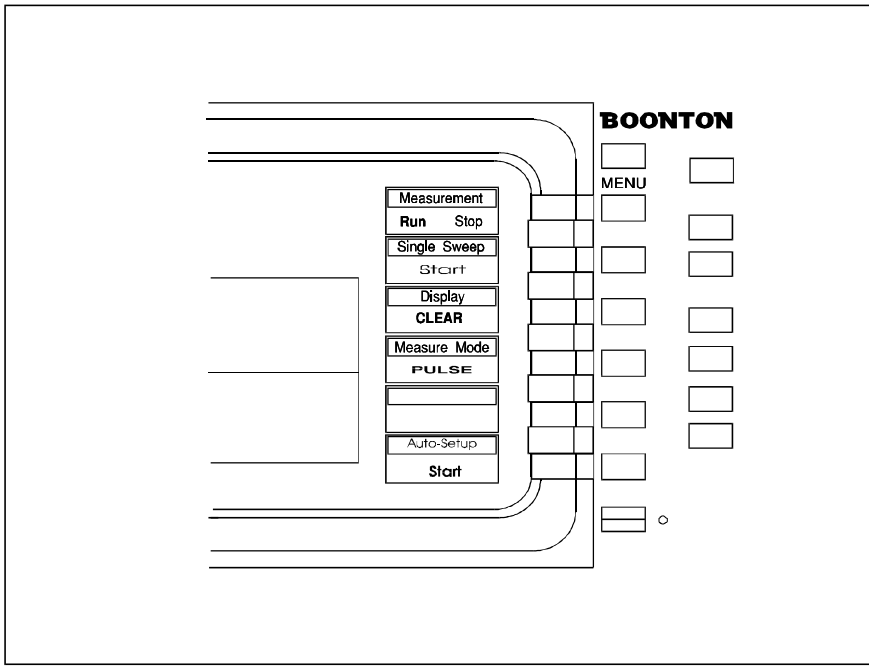


Figure 2-2. Power-On Display

5. On the front panel, press the UTIL function key followed by the *Util > Inst Status > REPORT* menu key. A display similar to Figure 2-3 should appear.

6. Verify that the message "Channel 1 is installed with Sensor Connected" appears. If the optional second channel is installed and a sensor is connected to it, a similar message should appear for Channel 2.

**Note**

If any of the steps above do not produce the expected action, try reinstalling the instrument software as shown in Section 7.4 "Software Upgrade". If this does not correct the problem, contact Boonton Electronics for technical support.

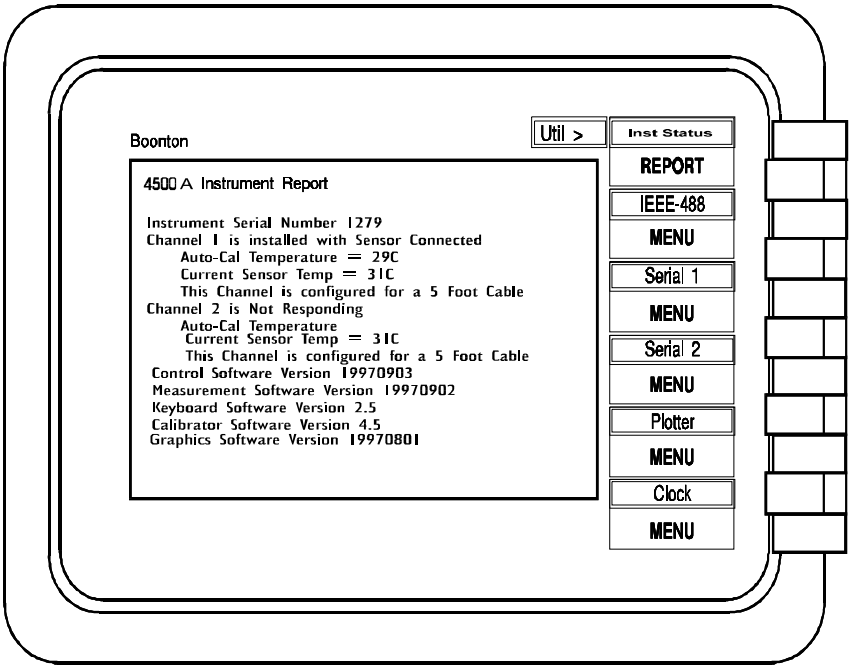


Figure 2-3. *Util > Inst Status* Display

7. Verify that the Instrument Serial Number matches the number on the rear panel label adjacent to the power connector assembly. See Figure 3-2.

8. Compare the Control Software Version numbers on the display to those on the diskette; verify that they are identical.

   If either an improper serial number or incorrect software version numbers appear on the screen, contact Boonton Electronics for technical support.

9. Follow Steps in Sections 3.4 and 3.5 to initialize and calibrate the instrument.

**Note**

You will not be able to perform measurements with the Model 4400A/4500A until an AutoCal procedure (see Subsection 3.5, Step 8) has been performed on the measurement channel. However, AutoCal data is saved when power is removed, so AutoCal need not be repeated with each power-on.

# 3

# Getting Started

This chapter will introduce the user to the Model 4400A/4500A. The chapter will identify objects on the front and rear panels, indentify display organization, list the initial configuration of the instrument after reset, demonstrate how to calibrate the sensors, and provide practice exercises for front panel operation. For additional information you should see **Chapter 4 "Operation."**

## 3.1 Organization

**Subsection 3.2** Operating Controls, Indicators and Connections identifies the control features and connections on the front and rear panels.

**Subsection 3.3 Monitor Display** describes the data fields in the standard (graphic mode) monitor display.

**Subsection 3.4 Initialization** explains how to turn the instrument on for the first time, connect a sensor, set the instrument up for operation, and initialize it to a known state. See Table 3-3. for initialized parameters and their values.

**Subsection 3.5 Calibration** is critical to the proper operation of an instrument. The Model 4400A/4500A comes with a 1 GHz level programmable calibrator. Before making any measurement the sensor(s) must be calibrated.

**Subsection 3.6 Practice Exercises** for power measurements, in pulse mode. Pulse mode operation requires an internal or external trigger event.

**Subsection 3.7 Practice Exercises** for statistical power measurement.

## 3.2 Operating Controls, Indicators and Connections

Figures 3-1 and 3-2 illustrate the controls, indicators and connectors on the front and rear panels, respectively, of the standard instrument. Refer to Table 3-1 for a description of each of the illustrated items. Connectors indicated by an asterisk (*) may be front or rear-mounted, depending on the option selected. The function and operation of all controls, indicators and connectors are the same on the standard and optional models.

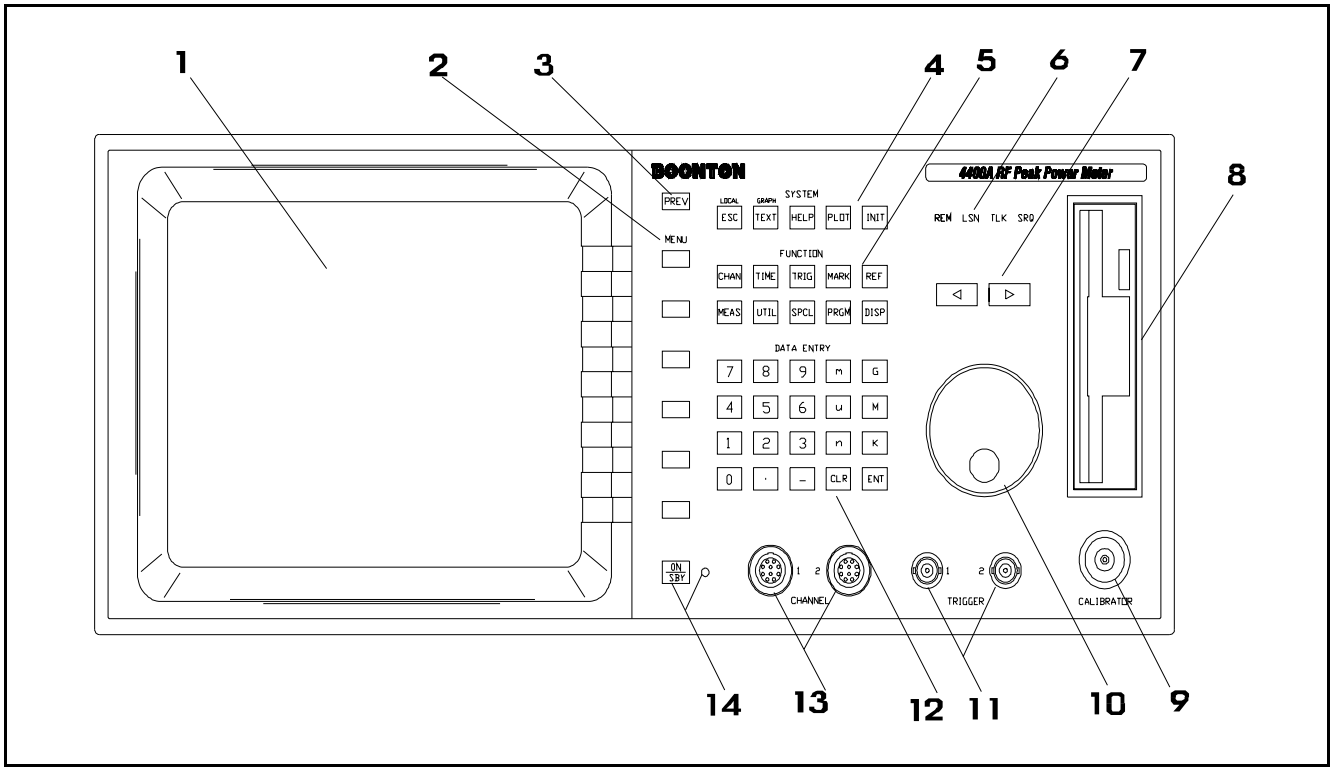


Figure 3-1. Standard Model 4500A RF Peak Power Meter Analyzer - Front Panel

**Table 3-1 Operating Controls, Indicators and Connections**

| Ref. No. Front | Ref. No. Rear | Nomenclature | Function |
|---|---|---|---|
| 1 | | Display screen | VGA color display for the measurement and trigger channels, screen menus, status messages, text reports and help screens. |
| 2 | | Menu keys | Six keys which enable the user to make a selection or choose a submenu. |
| 3 | | PREV key | Returns control to the next higher menu in the hierarchy or to the previous menu displayed, depending on whether the current and previous menu are from the same or different branches of the menu tree. |

**Table 3-1 Operating Controls, Indicators and Connections** *(continued)*

| Ref. No. Front | Ref. No. Rear | Nomenclature | Function |
|---|---|---|---|
| 4 | | System keys | **ESC/LOCAL** key. When the instrument is remote-enabled, pressing this key returns the instrument to the Local mode. In Local mode, this key returns control to the Top Level Menu, exits operations in process, and clears reports.<br><br>**TEXT/GRAPH** key. Selects either the standard (graphics) display of waveforms, menus and messages, or a text report of automatic waveform measurement results.<br><br>**HELP** key. Presents a Help screen containing brief operating instructions for all menu functions.<br><br>**PLOT** key. Outputs the current image on the display screen to selected output device.<br><br>**INIT** key. Initializes the measurement/display selections and parameters to a set of default values. |
| 5 | | FUNCTION keys | **CHAN** key. Enables the display and adjustment of level parameters on each channel; selects video bandwidth; initiates automatic calibration and zeroing function.<br><br>**TIME** key. Selects timebase and horizontal position of displayed waveforms.<br><br>**TRIG** key. Specifies source, threshold, mode and other parameters for the trigger function.<br><br>**MARK** key. Positions the selected marker on the horizontal axis and selects the top or bottom window.<br><br>**REF** key. Positions the selected reference lines on the vertical axis.<br><br>**DISP** key. Selects full or split-screen mode; controls the appearance of the displays; and selects linear or logarithmic level display, or persistence.<br><br>**MEAS** key. Enters frequency, defines the amplitudes of the distal, mesial and proximal, and displays automatic measurements in parameter fields.<br><br>**UTIL** key. Sets up the IEEE-488 bus, RS-232C serial ports, and HPGL plotter; sets the internal clock. Includes disk utilities.<br><br>**SPCL** key. Initiates internal self-tests, calibrator controls and reports sensor parameters.<br><br>**PRGM** key. Stores and recalls instrument setup data, saves reference waveforms, and stores and recalls reference waveforms to disk. |

| Table 3-1 Operating Controls, Indicators and Connections *(continued)* | | | |
|---|---|---|---|
| **Ref. No.** | | | |
| **Front** | **Rear** | **Nomenclature** | **Function** |
| 6 | | IEEE-488 bus annunciators | **REM** annunciator. Indicates that the instrument is addressed and remote on the IEEE-488 bus.<br><br>**LSN** annunciator. Indicates the instrument is addressed to listen on the IEEE-488 bus.<br><br>**TLK** annunciator. Indicates the instrument is addressed to talk on the IEEE-488 bus.<br><br>**SRQ** annunciator. Indicates that the instrument is requesting service from the bus controller. |
| 7 | | ◄ ► | Inputs parameters and selections to the instrument; duplicates the spin knob and data entry keypad; increments/decrements in single steps or repeats if held down. |
| 8 | | Diskette drive | DOS compatible 3.5" (1.44MB) diskette drive for loading the operating program and storing/recalling data. |

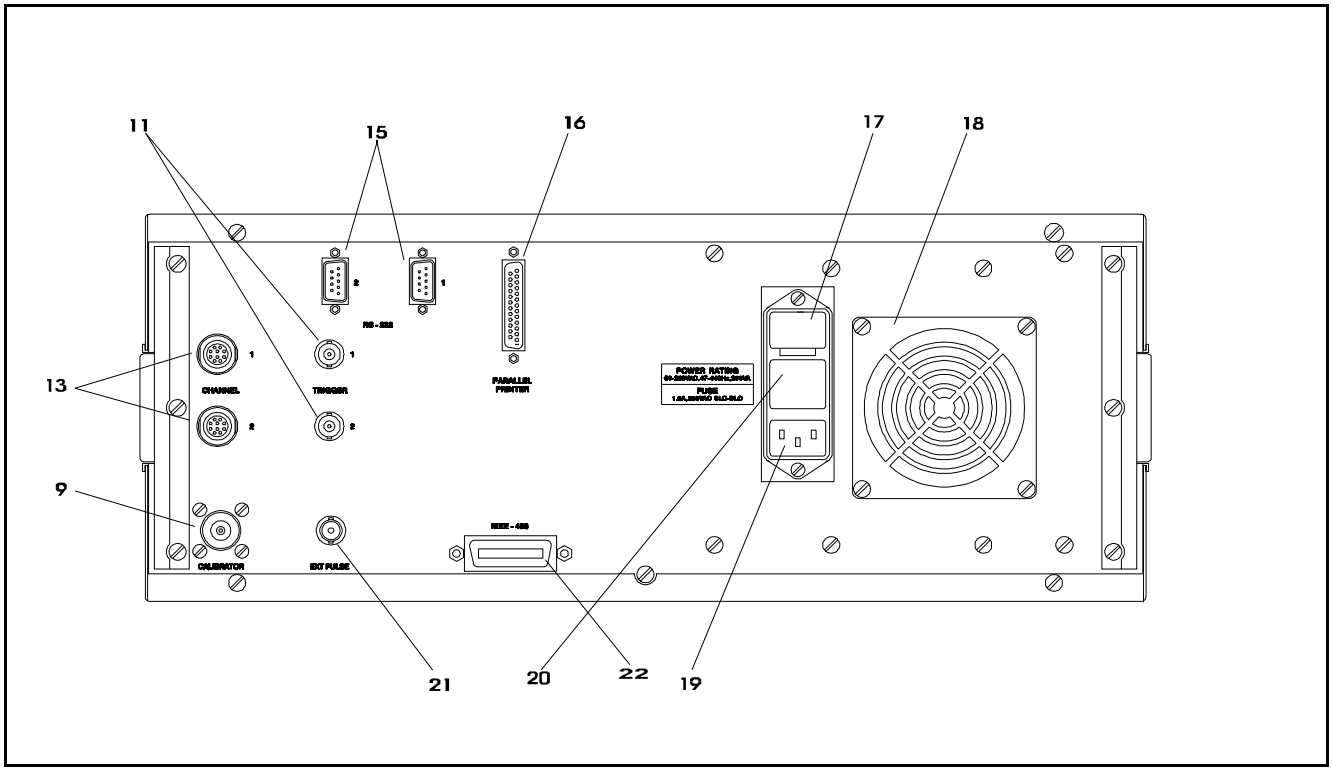


Figure 3-2. Model 4400A/4500A - Rear Panel
Shown with Optional Rear Panel Connectors

**Table 3-1 Operating Controls, Indicators and Connections** *(continued)*

| Ref. No. Front | Ref. No. Rear | Nomenclature | Function |
|---|---|---|---|
| 9* | 9* | Calibrator output | Type-N output port for the calibrator signal. |
| 10 | | Spin knob | Inputs control parameters and selections to the instrument. Input values are automatically limited to their allowable minimums and maximums. Duplicates the ◄ ► and data entry keypad. |
| 11* | 11* | Trigger input | BNC connector for Channel 1 and 2 trigger signals. |
| 12 | | Data entry keypad | Inputs parameters and selections to the instrument. Includes keys to specify units and to clear display errors. Duplicates the spin knob and ◄ ► . |
| 13* | 13* | Measurement channel input connectors | Multipin connector for Channel 1 and (optional) Channel 2 sensors. |
| 14 | | Power ON/SBY switch Indicator LED | In SBY (Standby) mode, calibrator remains powered to enhance accuracy and stability; other modules are off. LED is off in the standby mode. |
| | 15 | RS-232C Connectors #1 Output Port | Interface to serial output device. |
| | | #2 Diagnostic Port | Reports operational and error status to an external user-furnished maintenance terminal. |
| | 16 | Parallel Printer Port | Connector for parallel printer. |
| | 17 | Fuse holder | Holds two 250 Volt fuses (See Table 1-1). |
| | 18 | Cooling fan | Circulates air inside the instrument. |
| | 19 | Power cord connector | Supplies AC power to the instrument (see Subsection 2.2). |
| | 20 | Power switch | Connects or disconnects all power to the instrument; overrides ON/SBY switch. |
| | 21 | External pulse connector | For external control of calibrator pulse characteristics and synchronization. |
| | 22 | IEEE-488 bus connector | Interconnects instrument to the bus controller or output device. |

*May be front or rear-mounted, depending on the option selected.

## 3.3 Monitor Display

This subsection includes a picture (Figure 3-3) and a table (Table 3-2) of descriptions of the display layout of the Model 4400A/4500A. Figure 3-3. shows the principal display mode of the instrument. The other display modes are just text displays with a common menu structure.
See Section 4.5 for more information on the display format.

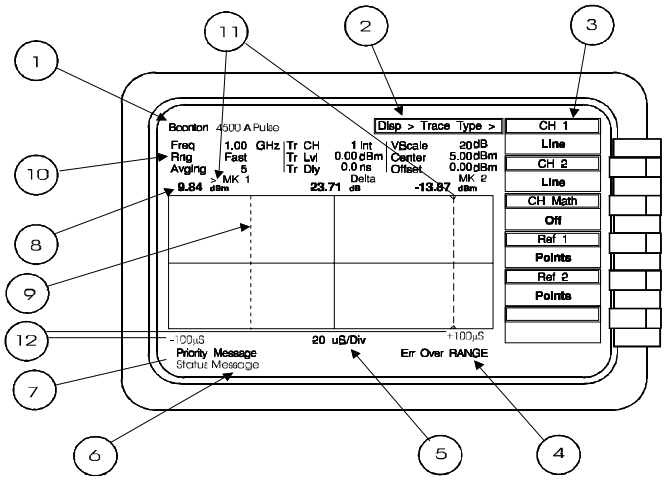


Figure 3-3. Monitor Display

**Table 3-2 Monitor Display Fields**

| Ref. No. | Field Name | Description |
|---|---|---|
| 1 | Header | Displays the Boonton logo, date/time, sensor temperature, or else remains blank. |
| 2 | Path name | Lists the higher menus in the path of the current menu. |
| 3 | Menu | The current menu. |
| 4 | Error field | Identifies errors as they occur. |
| 5 | Timebase | Indicates the timebase per division selected for the waveform display. |
| 6 | Message line | Describes ongoing operations. |

**Table 3-2 Monitor Display Fields** *(continued)*

| Ref. No. | Field Name | Description |
|---|---|---|
| 7 | Priority message | Displays status on a priority basis. Messages include Measuring Stopped, No Sensor, AutoCal Needed, and Temperature Drift, AutoTriggering, Waiting for Trigger, and Capturing Data.<br><br>When multiple messages are active, the message having the highest priority is displayed. For example, if no sensor was connected, only the “No Sensor” message would be displayed; the lower priority *AutoCal* and temperature messages would be suppressed. |
| 8 | Marker measurements | The two outside fields display the absolute power levels at Time Marks 1 and 2. (Marker 1 is on the left; Marker 2 is on the right.) The field above the centerline may display either the ratio of the two power levels (expressed in dB), or the average power in the waveform segment located between the Time Marks (in dBm). |
| 9 | Vertical Markers | There are two vertical markers per window which allows level measurements at specific times relative to the trigger event. |
| 10 | Parameters | Displays a table of measurement status parameters for the currently selected channel or any selected automatic measurement. |
| 11 | Active Marker Indicator | This indicator show the marker that is active in the marker menu and is the measurement at the marker with the triangle located on the vertical markers in the waveform display. |
| 12 | Time Base Limits | These fields show the timebase limits. In the pulse mode the time is relative to the trigger event. |

## 3.4 Initialize

The procedures presented in this section will initialize the Model 4400A/4500A and prepare it for operation. Steps 1 through 3 should be performed every time you turn on the instrument. Step 4 only needs to be performed when you wish to return the instrument operation to a known state. This usually occurs after turning the instrument on or at the beginning of a new test. If you have completed **Subsection 2.4 Preliminary Check**, you may skip this section and continue to **Subsection 3.6 Practice Exercises**.

**STEP** **PROCEDURE**

1. If the main power is off, press the power switch located on the rear panel. See Figure 3-2. If the ON/SBY indicator LED on the front panel is off, press the ON/SBY key. See Figure 3-1.

   After a self-check, the instrument will execute the application program. A brief initialization screen should appear, which shows the instrument name, model number, and software version. After several moments the main measurement screen will appear.

   If it is necessary to change the sensor installed on the instrument, perform Steps 2, 3 and 4.

**Caution**

When selecting a sensor for an exercise or a measurement, be sure you know the power range of the sensor. Extended operation beyond the sensor's specified upper power limit may result in permanent change of characteristics or burnout.

2. Connect the sensor to the sensor cable by aligning the red mark on each part and pressing the connectors together firmly.

3. Connect the sensor cable to the Channel 1 input (holding the red mark UP).

   When the sensor is connected, the instrument will download the factory installed calibration data from the sensor memory. While the download is in process, the message "CH 1 Sensor Data Loading" will appear on the display. If the sensor is disconnected during the download, either the "Sensor Data Error" or "$I^2C$ Error" message will appear. When this occurs, (press **CLR**) to clear the error; reconnect the sensor.

   In general, when any sensor error message occurs, disconnect and reconnect the sensor and press **CLR**. If the message persists, refer the problem to Boonton Electronics for technical support.

**Note**

The **INIT** key does not affect parameters selected for the IEEE Bus, Serial 1, Serial 2, display colors, or the printer/plotter configurations.

4 . Press the **INIT** function key to initialize the operating parameters listed in Table 3-3. This table represents all the parameters that are affected by initialization. This table lists the value or the option to which the

## Table 3-3. Initialized Parameters

| Parameter | | Default |
|---|---|---|
| Graph/Text/Help Mode Select | | Graph |
| Top Level Menu | | |
| Measurement | | Run |
| Measurement Mode | | Pulse |
| Parameters Related to the Chan # > Menu | Applies to: | |
| Select | | CH 1 |
| Channel | CH1, | On |
| | CH2, CH Math | |
| | REF 1, REF 2 | Off |
| Vertical Scale (active marker) | | |
| Log | All Channels | 20 dB/Div |
| Linear | All Channels | 20 mW/Div |
| Trig display | CH 1, CH 2 | 0.5 V/Div |
| Vertical Center | | |
| Log | All Channels | 0.00 dB |
| Linear | All Channels | 0 Divs |
| Trig display | CH 1, CH 2 | 0 Volts |
| Extensions (Menu) | | |
| Display | CH 1, CH 2 | Pwr |
| dB Offset | CH 1, CH 2 | 0.00 dB |
| Cal-Factor in dB | CH 1, CH2 | 0.00 dB |
| Power Mode | CH 1, CH2 | Pulse |
| Stat Mode | CH 1 | CDF |
| Video Bandwidth | | High |
| Averaging | CH 1, CH 2 | 5 |
| Expression | CH Math | |
| Argument A | | CH 1 |
| Operator | | - |
| Argument B | | CH 2 |
| Parameters Related to the Disp > Menu | Applies to: | |
| Screen | | Full |
| Units | | Log |
| Persistence | | Off |
| Format (Menu) | | |
| Grid Type | | Crosshair |
| Trace Type | All Channels | Line |
| Assign Trace | CH 1, CH Math, REF 1 | Bottom |
| | CH 2, REF 2 | Top |
| Disp Header | | Logo |
| Set Colors | | not altered by init. |
| Parameters Related to the Mark > Menu | | |
| Window | | Bottom |
| Marker 1 (active marker) | Power Mode | 5 ms |
| Marker 2 | | -10 ms |
| Marker 1 (active marker) | Stat Mode | 0.00 % |
| Marker 2 | | 50.00 % |
| Extensions (Menu) | | |
| MK Group | | Both |
| Mk 1 CH | | CH 1 |
| Mk 2 CH | | CH 1 |
| Delta Marker | Power Mode | Ratio |
| | Stat Mode | Ratio |
| Mk Math | Power Mode | MK2-MK1 |
| | Stat Mode | MK1-MK2 |
| MK Group | | Each |
| Mk 1 CH | | CH 1 |
| Mk 2 CH | | CH 2 |

## Table 3-3. Initialized Parameters *(continued)*

| Parameter | | Default |
|---|---|---|
| Parameters Related to the *Ref* > Menu | Applies to: | |
| Window | | Bottom |
| REF Line 1 | | 0.00 dBm |
| REF Line 2 | | 0.00 dBm |
| Extensions (Menu) | | |
| REF CH Sel | | Off |
| REF Track | Power Mode | Off |
| Parameters Related to the *Trig* > Menu | Applies to: | |
| Trig Mode | Power Mode | Auto |
| | Stat Mode | Continuous |
| Trig Source | | CH 1 Int |
| Trig Level | CH 1 Int | -3.00 dBm |
| | CH 2 Int | 0.00 dBm |
| | CH 1, CH 2 Int | 0.00 V |
| HoldOff | | 0 µs |
| Trig Slope | | + |
| Parameters Related to the *Time* > Menu | Applies to: | |
| Timebase | Power Mode | 50 µs/Div |
| Position | | M |
| Trig Delay | | 0 µs |
| X-axis | Stat Mode | 1.0 0%/Div |
| % Offset | | 0.0 % |
| Paramters Related to the *Meas* > Menu | Applies to: | |
| Freq Group | | Each |
| Freq CH 1 | Freq Group Each & Both | 1.00 GHz |
| Freq CH 2 | Freq Group Each & Both | 1.00 GHz |
| Define Pulse (Menu) | Power Mode | |
| Distal | | 90% |
| Mesial | | 50% |
| Proximal | | 10% |
| Meas Mode | | PWR |
| Param Meas (Menu) | Power Mode | |
| Select | | CH 1 |
| Param Mode | | Status |
| Param Column | | L |
| Param Top (active menu) | | Pulse Width |
| Param Middle | | Risetime |
| Param Bottom | | Falltime |
| Confidence | Stat Mode | 80% |
| Parameters Related to the *SPCL* > Menu | Applies to: | |
| Calibrator (Menu) | | |
| Cal Output | | Off |
| Set Level (active menu) | | 0.0 dBm |
| Max Power | | 20.0 dBm |
| Cal Mode | | Pulse |
| Pulse (Menu) | | |
| Source | | Int |
| Polarity | | + |
| Duty Cycle | | 10% |
| Pulse Period | | 100 µs |
| Extensions (Menu) | | |
| Level Step (active menu) | | 0.1 dBm |
| Peaking Mode | | Off |
| Auto CENTER | | Off |

## 3.5 Calibration

Before any measurements can be aquired with the Model 400A/4500A, a sensor must be connected from the instrument to the built-in calibrator, and calibrated. The following steps will guide the operator through the calibration process. This explanation covers a single channel configuration. If a second channel and sensor is available, repeat the steps for channel 2.

**Note**

If the sensor was just connected to the instrument or the instrument was just turned on, please wait at least 15 minutes for the instrument to warm up before autocalibration.

| STEP | PROCEDURE |
|---|---|
| 1. | Connect a Boonton Model 56xxx Series sensor to the instrument's CHANNEL input using the supplied cable. The cable will have a silver multipin connector on each end. To connect the cable, align the red dots between the connector and sensor and insert. Once the connector clicks into place, the cable will not pull out without sliding the barrel of the connector away from the connection point. The other end of the cable connects to the measurement channel (1) input connector as identified in Figure 3-1 item 13. |
| 2. | Connect the sensor to the "N" connector for the internal calibrator as identified by Figure 3-1 item 9. If the sensor has a "K" style connector use the "K" to "N" adapter (95105501A) provided. The 56326, 56525, 56340 and 56540 sensors will need the adapter. |
| 3. | Press INIT key. This sets the instrument to pulse mode. However, a pulse waveform will not appear unless the calibrator is turned on. |
| 4. | Press MEAS key. |
| 5. | Select *Meas > Frequency CH1>* by pressing the menu key associated with it. The box around the menu will be highlighted. This indicates that the frequency function is selected for number entry. Frequency is given in hertz. To select a frequency value of 1 GHz, press the "1" key followed by the "G" (for giga) key.<br><br>This causes the frequency correction factor for the sensor to be read from the sensor's internal memory and automatically be applied to the measurement.<br><br>Although in this case the value should have already been set to 1 GHz by the INIT key, it is good practice for learning the operation of the instrument. |
| 6. | Press the **CHAN** function key. |
| 7. | Press the *Chan 1 > Calibration* menu key. |
| 8. | Press the *Chan 1 > Calibration > AutoCal* menu key to initiate the automatic zeroing and sensor calibration routine.<br><br>The *AutoCal* routine will calibrate the entire dynamic range of the sensor in approximately 1.5 minutes while reporting status via screen messages. *AutoCal* will not start if there are any pending errors. Press **CLR** to clear errors before initiating *AutoCal*. A listing of error messages appears in **Appendix A Error Messages**. |

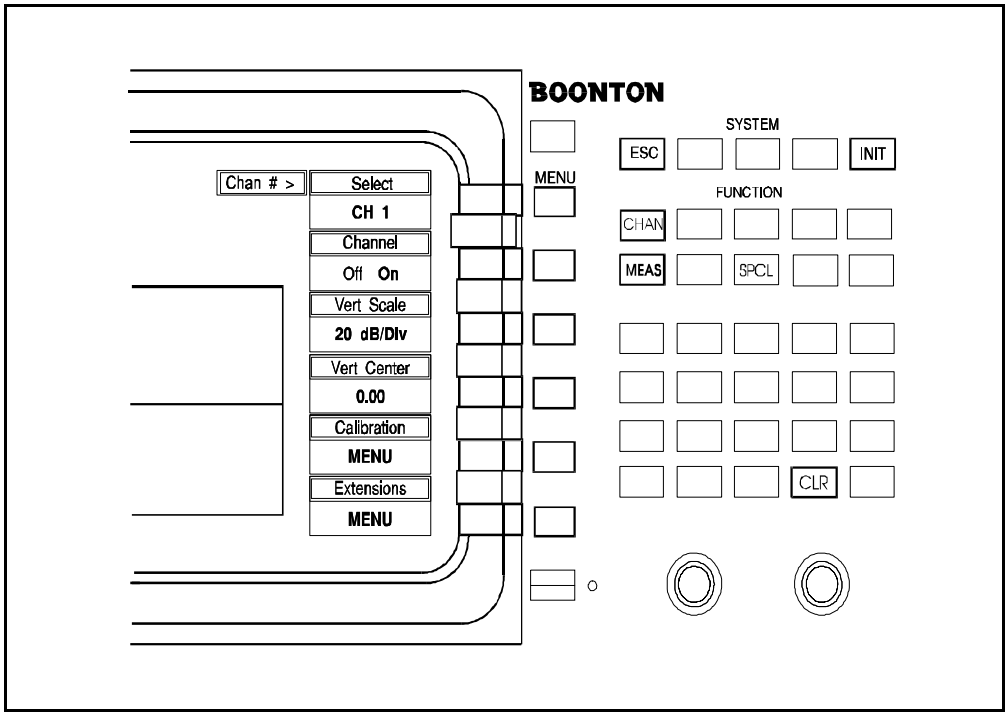


Figure 3-4. Front Panel Controls Used in Calibration Procedures

function will be assigned after initialization.

| STEP | PROCEDURE |
|---|---|

9. If an error message appears after you have initiated *AutoCal*, verify the following:

   a. Is the sensor that is connected to the calibrator also connected to the channel indicated in the *Chan 1 > Select* menu?

   b. Are the sensor cable connections secure at both the sensor and instrument input channels?

   c. Were any errors pending before you initiated *AutoCal*?

   d. Does the instrument pass its self-test (no errors reported when you pressed ON/SBY)?

      To repeat the self-test, press *Spcl > Servicing > Self Test*.

   e. Has an improper value been entered into the *CF in dB* window? (Refer to the discussion of the *Chan 1 > Extensions* menu later in this section.)

   f. Are any attenuators or other devices that are connected between the sensor and the calibrator not accounted for in the *CF in dB* value? (Refer to the discussion of the *Chan 1 > Extensions* menu later in this section.)

This completes the *Calibration* exercise. When you have accomplished these steps, the instrument's zero level will be properly adjusted, the sensor will be calibrated, the calibrator must be manually turned on and a pulsed waveform display will appear. The instrument will be ready for the practice exercises presented in the next subsection.

## 3.6 Practice Exercise for Pulse Power Measurements

In the following exercises you will practice adjusting the display settings and pulse train parameters to become familiar with the Model 4400A/4500A controls. Complete instructions for each control function are presented in **Section 4 OPERATION**.

It is suggested that you review the front panel control conventions presented in **Subsection 4.3 Menu Conventions** before proceeding.

Before beginning the exercise connect a sensor to the calibrator from channel 1. In the *SPCL > CALIBRATOR >* menu set the level to +5 dBm, set Cal Mode to Pulse, and turn the calibrator output "On".

| MENU ITEM | EXERCISE |
|---|---|
| CHAN | Press the **CHAN** function key and perform the following exercises to become familiar with the items in the *Chan 1 >* menu. |
| *Chan 1 > Select* | Press the *Chan 1 > Select* key to select a channel. Each time the button is pressed, the next available channel is selected. Pressing repeatedly will cycle through the following channels:<br><br>CH 1, CH 2, CH Math, Ref 1, Ref 2<br><br>Observe how the menu changes as you step through the items offered in the *Chan > Select* window.<br><br>When *CH Math* is current in the *Chan > Select* window, those instruments equipped with the optional Channel 2 will display the difference between the signals applied to Channels 1 and 2. Use the *Chan (CH Math) > Expression* window to set the operation of the (CH Math) display.<br><br>Use the *Chan 1 > Select* function to reselect CH 1 before proceeding. |
| *Chan 1 > Channel* | Press the *Chan > Channel* menu key to toggle the CH 1 display off and on. The waveform should disappear and reappear. (Leave it on.) |
| *Chan 1 > Vert Scale* | If the *Chan 1 > Vert Scal*e selection is not active, press the *Chan # > Vert Scale* menu key. Use the spin knob or ◄ ► to step the vertical sensitivity of the display through the range from 0.1 dB/Div to 20 dB/Div. Observe the resulting changes in the pulse height, and note that the *VertScale* parameter changes at each step to match the selected sensitivity. Note also that the display is rescaled without recapture of data, and that the markers continue to make full-resolution measurements on waveforms that are off the screen. |

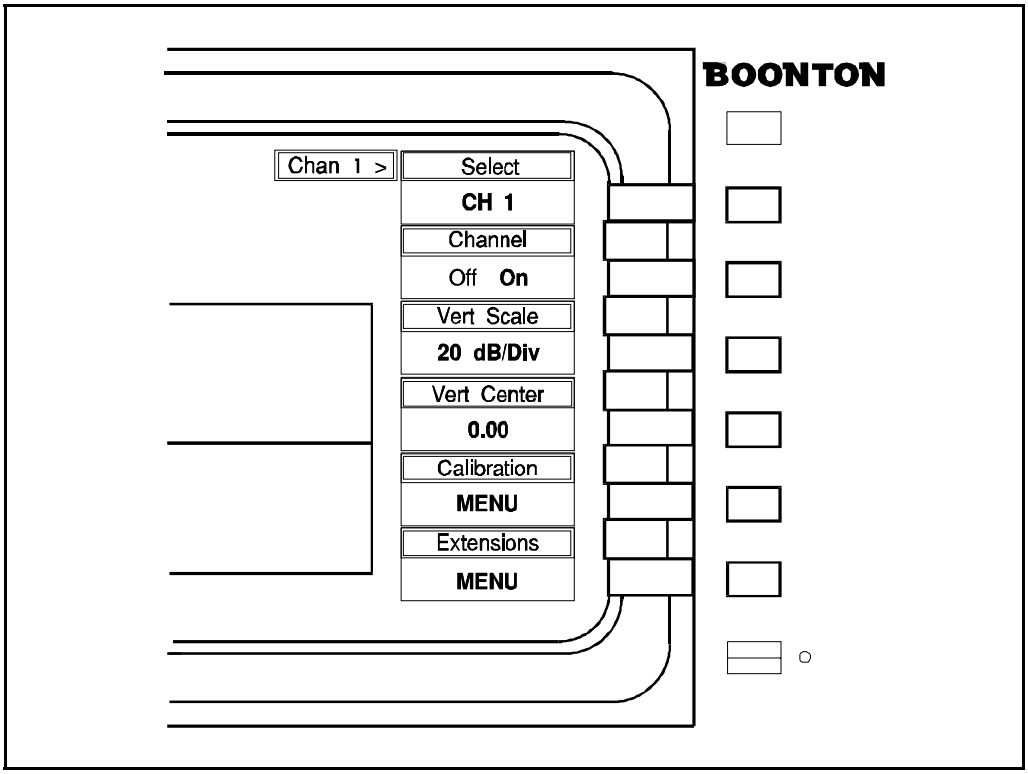


Figure 3-5. *Chan 1* > Menu

*Chan 1 > Vert Center*

Press the *Chan 1 > Vert Center* menu key. Use any of the data entry controls to shift the vertical center of the display to correspond to power levels of -10, 0 and +10 dBm. Observe the position of the display at each setting and note that the *VertCenter* parameter changes to match the selected level. Note also that the display is rescaled without recapture of data.

*Chan 1 > Extensions >*

Press the *Chan 1 > Extensions* menu key to access the *Extensions* submenu (Figure 3-7).

*Chan 1 > Extensions > Display*

Press the *Chan 1 > Extensions > Display* menu key to toggle between the *Pwr* and *Trig* functions. Selecting the *Pwr* function displays the waveform that is connected to the sensor; selecting the *Trig* function displays the waveform connected to the external trigger input. Because there is no external connection to the trigger input for this exercise, the waveform display will be show a flat trace if Trig is selected.

*Chan 1 > Extensions > dB Offset*

This selection will be highlighted. Use any of the data entry controls to shift the waveform vertically on the display. (Positive offsets move the waveform up; negative offsets move it down.)

**Note**

In practice, *dB Offset* is used to compensate for attenuators or amplifiers inserted between the sensor and the device under test. *CF in dB* is used to compensate for losses in cables, adapters, switches and other line equipment inserted between the sensor and the calibrator output, or between the sensor and the device under test, *but not both*.

*Chan 1 > Extensions CF in dB*

Press the *Chan 1 > Extensions > CF in dB* menu key. Use any of the data entry controls to shift the waveform vertically.

| MENU ITEM | EXERCISE |
|---|---|
| *Chan 1 > Extensions > Video BW* | Press the *Chan 1 > Extensions > Video BW* menu key to toggle between the “Low” (narrowband) and “High” (wideband) sensor bandwidths. The bandwidths and risetimes corresponding to the “Low” and “High” sensor selections are presented in the sensor specifications, Tables 1-3, through 1-17. The “Low” position reduces the RF noise level. The “High” position is useful for displaying pulses with fast rise and falltimes. |
| *Chan 1 > Extensions > Averaging* | Press the *Chan 1 > Extensions > Averaging* menu key. Use any of the data entry controls to select the number of samples to be averaged at each point of the waveform to produce the waveform display. |
| TIME | Press the **TIME** function key and perform the following exercises to become familiar with the items in the *Time* > menu (Figure 3-8): |
| *Time > Timebase* | This selection will be highlighted. Use the spin knob to step the timebase through the range from 10 ns/Div to 1 s/Div. Observe the changes in the display and note that for each selection, the *Time > Tr Dly* reading remains consistent with the limits set by the resolution of the display. |
| *Time > Position* | Press the *Time > Position* menu key to shift the start of the waveform to the left (L) edge, middle (M) or right (R) edge of the display area. |

**Note**

In practice, this feature is used to observe a specific segment of the waveform. Select “L” to observe the waveform immediately *after* the trigger occurs; “R” to observe the waveform immediatetely *before*; and “M” to observe segments of the waveform just *before and after* the trigger.

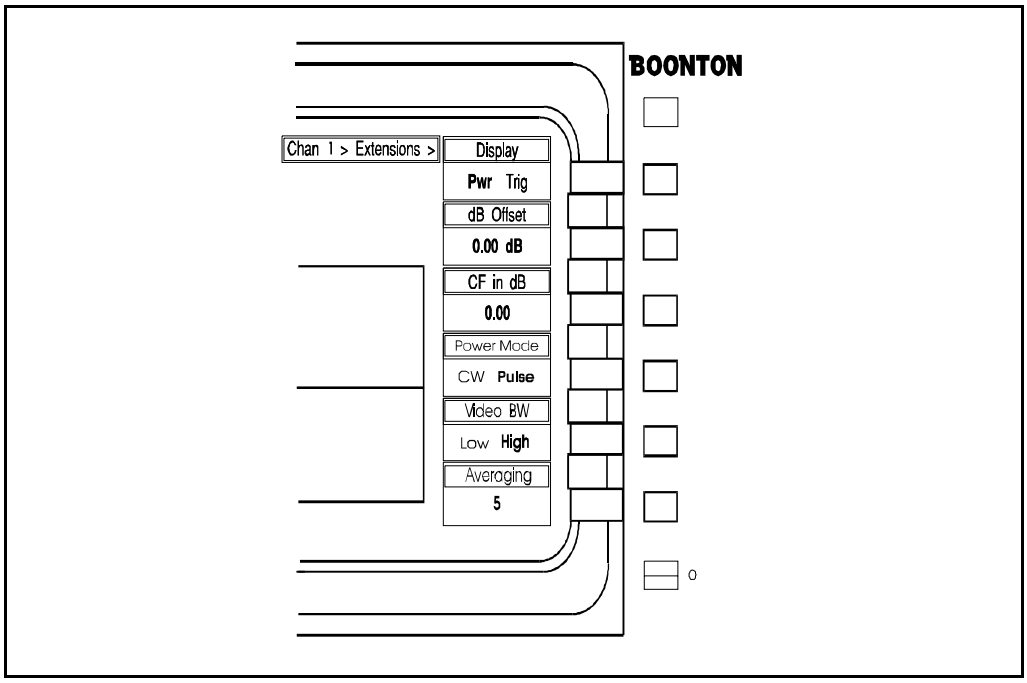


Figure 3-6. *Chan 1 > Extensions* > Menu

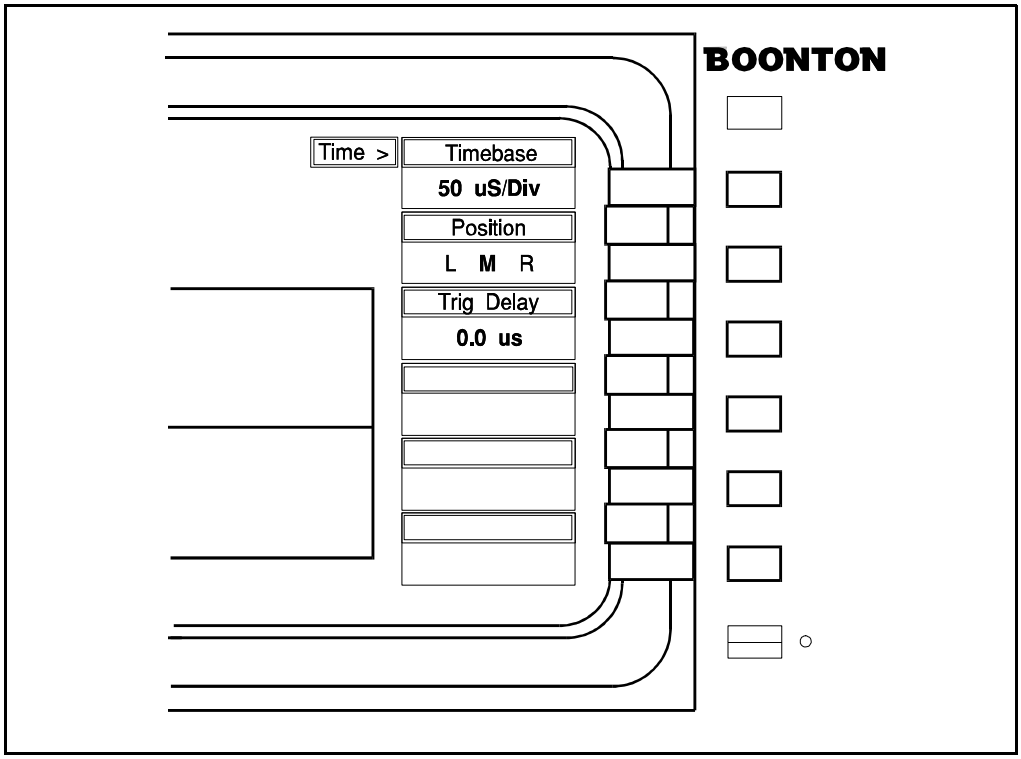


Figure 3-7. *Time* > Menu

| MENU ITEM | EXERCISE |
|---|---|
| *Time > Trig Delay* | Press the *Time > Trig Delay* menu key. Use any of the data entry controls to adjust the time delay between the trigger and the start of the data capture display. The instrument adjusts the limits of the *Trig Delay* parameter based on the timebase selection to reflect an appropriate resolution for that timebase. |
| TRIG | Press the **TRIG** function key and perform the following exercises to become familiar with the items in the *Trig* > menu (Figure 3-9): |
| *Trig > Trig Mode* | Press the *Trig > Trig Mod*e menu key to toggle between *Auto* and *Norm(al)*.<br><br>In the *Norm* mode, the data capture and waveform display are triggered when the internal or external trigger pulse reaches the trigger level. In *Auto* mode, if no trigger pulse is present at or above the trigger level, the measurement is triggered automatically after a prespecified timeout period. The *Auto* mode is preferred for measurement of unmodulated (CW) carriers. |
| *Trig > Trig Source* | Press the *Trig > Trig Source* menu key to toggle between *Ch 1 Int(ernal*) and *Ch 1 Ext(ernal*). The latter choice is valid only if an external trigger source is connected. The Ch 2 selections will be activated only if the optional Channel 2 is installed. |
| *Trig > Trig Level* | Use any of the data entry controls to adjust the trigger level, which may be set to any positive or negative value, up to the peak power of the trigger signal. For these exercises, the trigger waveform is the calibrator signal, which has been set to a peak power level of +10 dBm. Accordingly, the *Trig Level* control may be set to any level in the range from -5 to +9 dBm. |

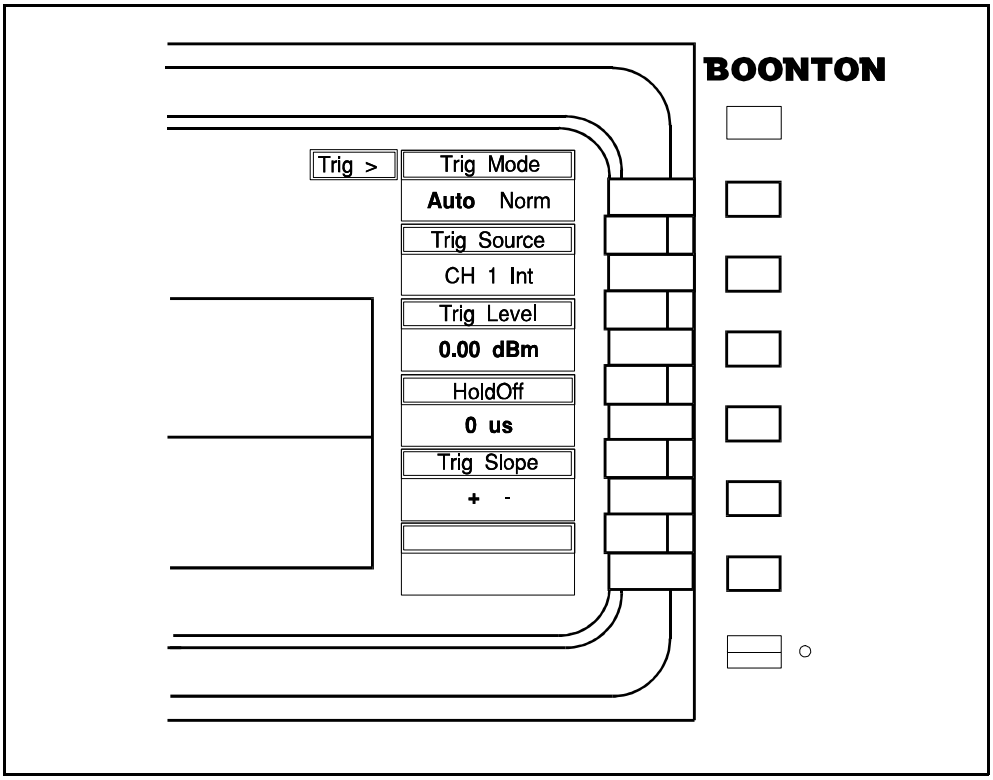


Figure 3-8. *Trig* > Menu

| MENU ITEM | EXERCISE |
|---|---|
| *Trig > HoldOff* | This control cannot be used effectively when the calibrator is the source of the test signal. Consequently, it is not used for these exercises. See Table 4-9 for a discussion of the HoldOff parameter. |
| *Trig > Trig Slope* | Press the *Trig > Trig Slope* menu key to toggle between rising edge triggering and falling edge triggering. Note that in the *Status* parameter field at the top of the graph mode display the trigger slope is indicated by the sign of the trigger channel. |
| MARK | Press the **MARK** function key and perform the following exercises to become familiar with the items in the *Mark* > menu (Figure 3-10): |
| *Mark > Window* | This key enables you to select the time marks in the top or bottom window of a split-screen display available with two-channel instruments (Figure 3-11). (To establish a split-scree display, press the **DISP** function key; then press the *Disp > Screen* menu key and select *Split.*)<br><br>To switch between the top and bottom windows of the split screen display, press the **MARK** function key followed by the *Mark > Window* menu key. The active marker is indicated by the highlighted menu box in the *Mark* > menu and by small triangles at the top and bottom of the markers. See Figure 3-12. |

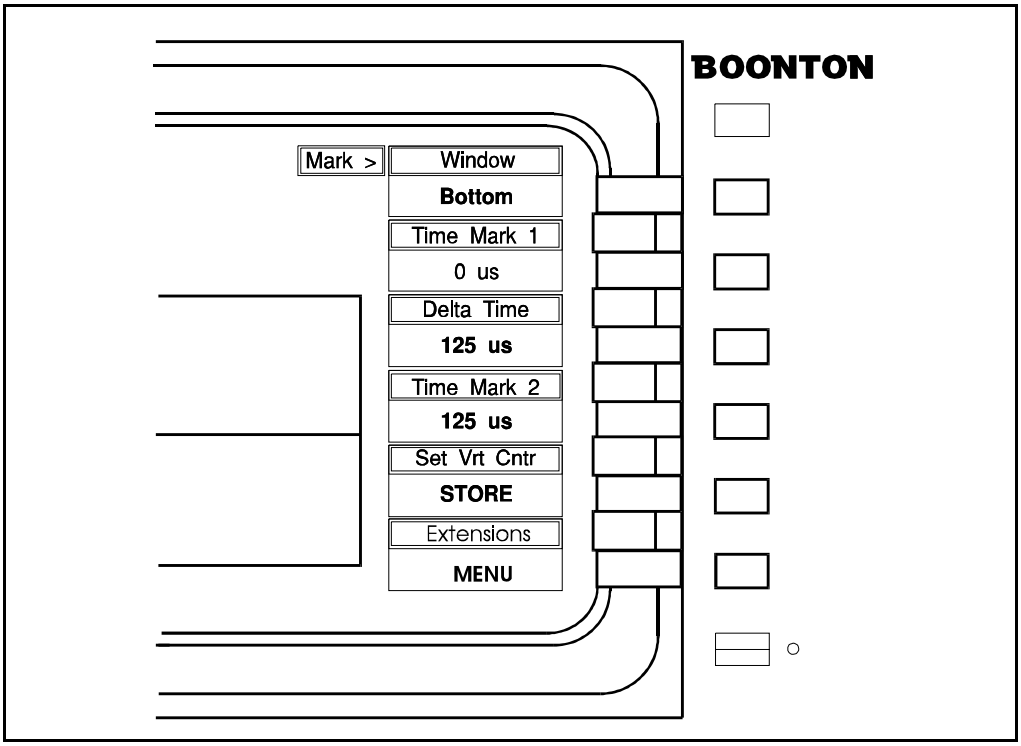


Figure 3-9. *Mark* > Menu

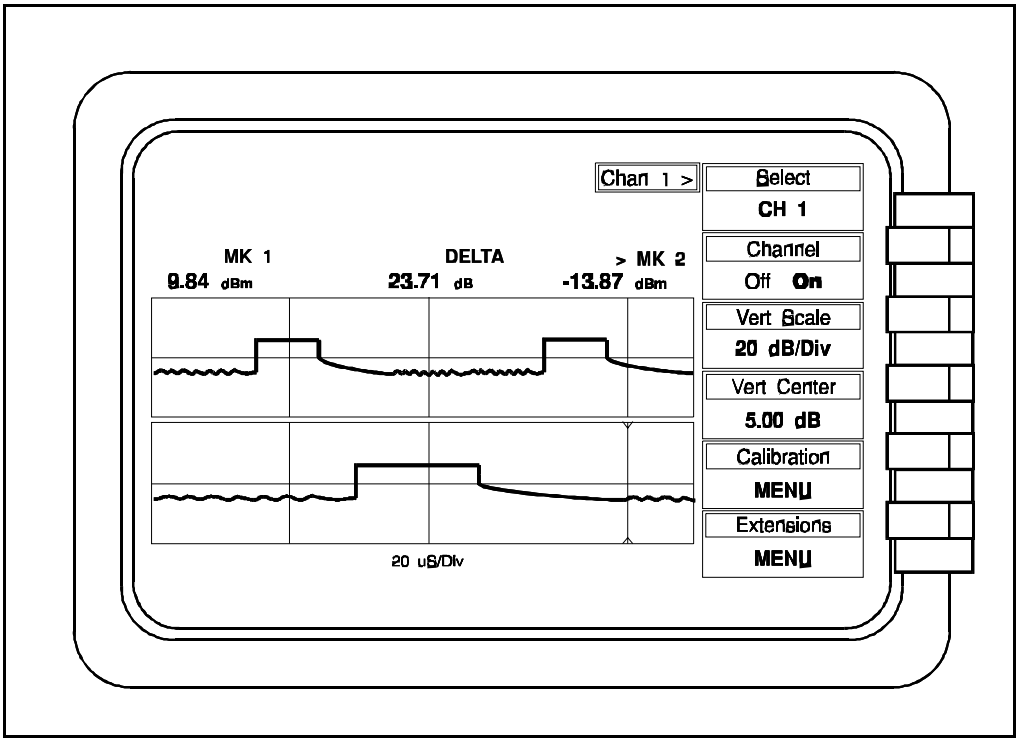


Figure 3-10. Split-Screen Display

| MENU ITEM | EXERCISE |
|---|---|
| | To return to a full screen, press the **DISP function key,** followed by the *Disp > Screen* menu key. Select *Full*. |
| | Press the **MARK** function key to continue the exercise. |
| *Mark > Time Mark 1* | If Time Mark 1 is inactive, press the *Mark > Time Mark 1* menu key to activate it. Use the spin knob or◄ ► to move Time Mark 1 to the leading edge of any pulse in the display. Move the time mark across the pulse and observe the power reading (in dBm) located above the left-hand side of the waveform display window. This reading refers to the peak power level at Time Mark 1 and will be displayed in the same color as the measured waveform. Also observe that the *Time Mark 1* display box shows the time delay of the marker position relative to the trigger event. Use this feature to determine the relative time of any point on the measured waveform. |
| *Mark > Time Mark 2* | If Time Mark 2 is inactive, press the *Mark > Time Mark 2* menu key to activate it. Use the spin knob to move Time Mark 2 a few divisions away from Time Mark 1. Observe that the active marker is designated by triangles at top and bottom. Note that the power reading above the right-hand side of the waveform display window corresponds to Time Mark 2. Note also that the ratio of the waveform power levels at Time Mark 1 and Time Mark 2 (which is equivalent to the difference of the two levels expressed in “dBm”) is displayed above the centerline of the waveform. |

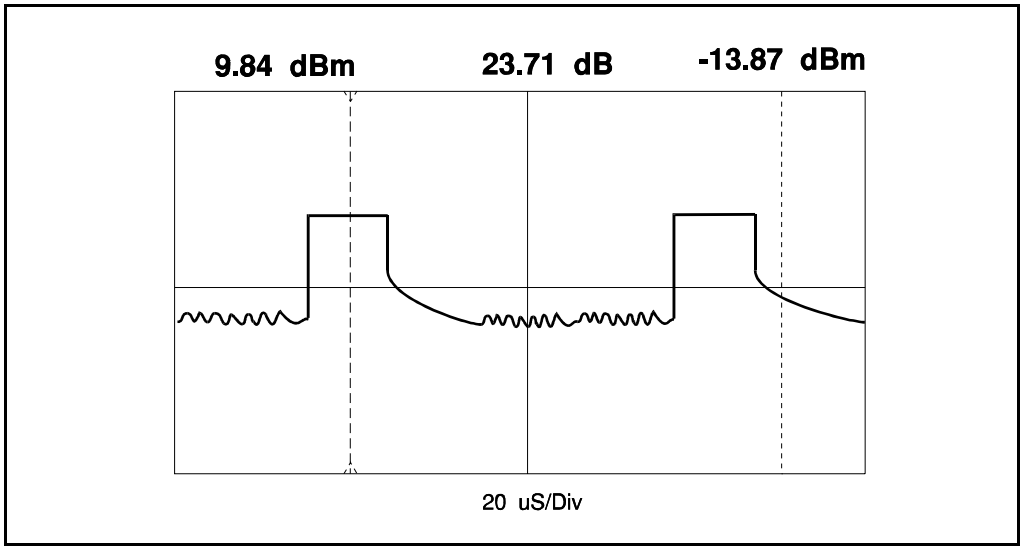


Figure 3-11. Waveform Display With Time Marks

*Mark > Delta Time* Move either time marker and observe that the *Mark > Delta Time* box displays the difference in time between the two time marks.

*Mark > Set Vrt Cntr* Press the *Mark > Set Vrt Cntr* menu key to move the display window so that the signal level at the active marker crossing will be displayed at the center of the screen.
For example, pressing the *Set Vrt Cntr* menu key when the active marker is on a pulse measuring +10 dBm will shift the display up or down, so that the center of the vertical scale corresponds to +10 dBm (see Figure 3-13a). If you move the active marker off the pulse so that its power reading is -15 dBm, for example, pressing the *Set Vrt Cntr* key will shift the display so the vertical center corresponds to -15 dBm (Figure 3-13b).

When you press the *Mark > Set Vrt Cntr* menu key, the *Vertical Center* parameter is automatically adjusted in the applicable *Chan # >* menu.

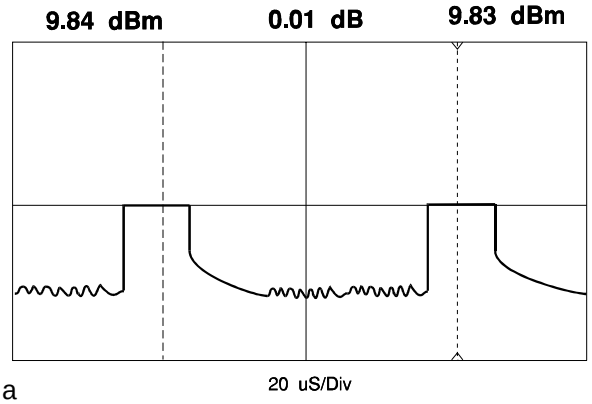


Figure 3-12a

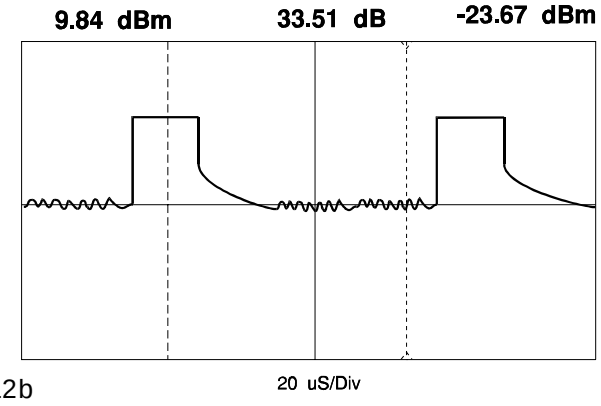


Figure 3-12b

Figure 3-12. Using *Mark >Set Vertical Center*

| MENU ITEM | EXERCISE |
|---|---|
| MEAS | Press the MEAS function key, and perform the following exercises to become familiar with frequency entry.<br><br>Use any of the data entry controls to select the measurement frequency *(in GHz). The instrument will automatically read the frequency correction* data from the sensor and apply the correction to the measurement.<br><br>Because the sensor is connected to the calibrator output for these exercises, the measurement frequency must be set to 1.0 GHz (the frequency of the calibrator signal) to obtain a valid reading. |
| *Meas > Frequency Group* | This selection toggles between BOTH and EACH. The BOTH option links both channels together with the same frequency. The EACH option allows each channel to be set to different frequencies. |
| *Meas > Frequency Channel 1* | Use any of the data entry controls to adjust the frequency for Channel 1 operation. This frequency selection is used to calculate the required correction factor. |
| *Meas > Frequency Channel 2* | This only applies to Channel 2 operation. The operation is the same as discussed above. |

**Note**

The Model 4400A/4500A readings are always full scale, so data is not lost when vertical settings are changed. Thus, there is no danger of losing data related to events that occur during adjustment of *Vertical Scale, Vertical Center, dB Offset, CF in dB,* or *Frequency*.

This concludes the Practice Pulse Power Exercises. Press the **INIT** function key to clear the practice parameter settings and the instrument will be ready to use.

**Hint**

For best results, read the rest of this Instruction Manual through **Section 6 APPLICATION NOTES** before using the Model 4400A/4500A to make operational measurements.

## 3.7 Practice Exercise for Statistical Power Measurements *(4500A only)*

In the following exercises you will practice adjusting settings for the Model 4500A Digital Sampling Power Analyzer in the statistical power mode. In statistical power measurements, the instrument does not require a trigger event to make level measurements. The signal is continuously sampled at approximately half a million samples per second

Before beginning the exercise, turn the instrument power on and connect a sensor to channel 1. Press the **INIT** key to initialize the instrument to a known state. Then connect the sensor to the built-in calibrator. If a sensor requires calibration see Section 3.5 for instructions.

In the *SPCL >CALIBRATOR* menu set the calibrator level to +5 dBm, cal mode to pulse and turn the output power level on.

For more information on the statistical power measure mode definitions, see **Chapter 6 - Applications.**

| MENU ITEM | EXERCISE |
|---|---|
| ***Top Level*** | |
| *> Measure Mode* | Press > *Measure Mode* to cycle through the available measurement modes. On the Model 4500A these are:<br>Pulse, CW, CDF, 1-CDF, PDF<br><br>The last three modes set the 4500A for continuous data acquisition and with statistical display formats. Select the CDF measurement mode. |
| *> Measurement* | Toggle > *Measurement* from RUN to STOP. This will stop the instrument from measuring. |
| *>Display* | Press > *Display:* CLEAR to clear all data and display. All readings will go to dashes (invalid). Use this function any time old data needs to be cleared and new data captured.<br><br>Now toggle the > *Measure* menu to RUN to start acquiring data.<br><br>As the instrument captures data a cumulative distribution function plot will appear on the display (Figure 3-14). This plot represents all data points captured by the instrument. The plot shows the percentage of points that have been accumulated at or below a selected power level. |
| *Parameter and Marker fields* | There are 9 parameter fields above the waveform display in the graph mode. These are:<br><br>Peak Power - The maximum power level sampled<br><br>Average Power - The calculated average power based on all samples<br><br>Peak to Average Ratio - Peak power minus the average power in dB<br><br>Total Time - This is the total time over which readings are captured<br><br>Total Points - This is the actual number of samples captured in 0.1 mega sample resolution<br><br>Tolerance - This is a measure of the statistical relevance of the data and is related to the selected confidence band.<br><br>Ref 1, 2 and Delta - These are the values returned as readings from the horizontal reference lines. The reference lines are set in power and return a value in percent. |

| MENU ITEM | EXERCISE |
|---|---|
| | Press the TEXT button and the screen changes to the text mode to show markers, reference lines, and all the automatic measurements on one screen.<br><br>Press the TEXT button again to change the screen back to the graph display. |
| CHAN | Press the **CHAN** function key and perform the following exercises to become familiar with the items in the *Chan 1 >* menu. |
| *Chan 1 > Select* | Press the *Chan 1 > Select* key to select a channel. Each time the button is pressed, the next available channel is selected. Pressing repeatedly will cycle through the following channels:<br><br>CH 1, CH Math, Ref 1, Ref 2<br><br>Observe how the menu changes as you step through the items offered in the *Chan # > Select* window.<br><br>In the channel selection menu Channel 2 is not available in the *Stat* measurement mode.<br><br>Use the *Chan # > Select* function to reselect CH 1 before proceeding. |
| *Chan 1 > Channel* | Press the *Chan > Channel* menu key to toggle the CH 1 display off and on. The waveform should disappear and reappear. (Leave it on.) |
| *Chan 1 > Vert Scale* | If the *Chan 1 > Vert Scal*e selection is not active, press the *Chan # > Vert Scale* menu key. Use the spin knob or ◄ ► to step the vertical sensitivity of the display through the range from 0.1 dB/Div to 20 dB/Div. Observe the resulting changes in the CDF plot. Note also that the display is rescaled without recapture of data. |
| *Chan 1 > Vert Center* | Press the *Chan 1 > Vert Center* menu key. Use any of the data entry controls to shift the vertical center of the display to correspond to power levels of -10, 0 and +10 dBm. Observe the position of the display at each setting and note that the *Center* parameter changes to match the selected level. Note also that the display is rescaled without recapture of data. |
| *Chan 1 > Extensions >* | Press the *Chan 1 > Extensions* menu key to access the *Extensions* submenu. |

| MENU ITEM | EXERCISE |
|---|---|
| *Chan 1 > Extensions > dB Offset* | The selection will be highlighted as it is the default active function for the extensions submenu. Use any of the data entry controls to shift the waveform vertically on the display. (Positive offsets move the waveform up; negative offsets move it down.) |

**Note**

In practice, *dB Offset* is used to compensate for attenuators or amplifiers inserted between the sensor and the device under test. *CF in dB* is used to compensate for losses in cables, adapters, switches and other line equipment inserted between the sensor and the calibrator output, or between the sensor and the device under test, *but not both.*

*Chan 1 > Extensions CF in dB*

Press the *Chan 1 > Extensions > CF in dB* menu key. Use any of the data entry controls to shift the waveform vertically.

*Chan 1 > Extensions > Video BW*

Press the *Chan 1 > Extensions > Video BW* menu key to toggle between the “Low” (narrowband) and “High” (wideband) sensor bandwidths. The bandwidths and risetimes corresponding to the “Low” and “High” sensor selections are presented in the sensor specifications, Tables 1-3, through 1-17. The “Low” position reduces the RF noise level.

MEAS

Press the MEAS function key and perform the following exercises to become familiar with selecting statistical measurement modes.

*Meas > Stat Mode*

This menu selection offers three choices on how the captured data is plotted. They are *cumulative distribution function (CDF) the default mode, 1- cumulative distribution function (1-CDF), and probability density function (PDF).*

The CDF plot presents the data in a running total by level which can be read by markers or reference lines as the percent of total readings at or below a selected power level.

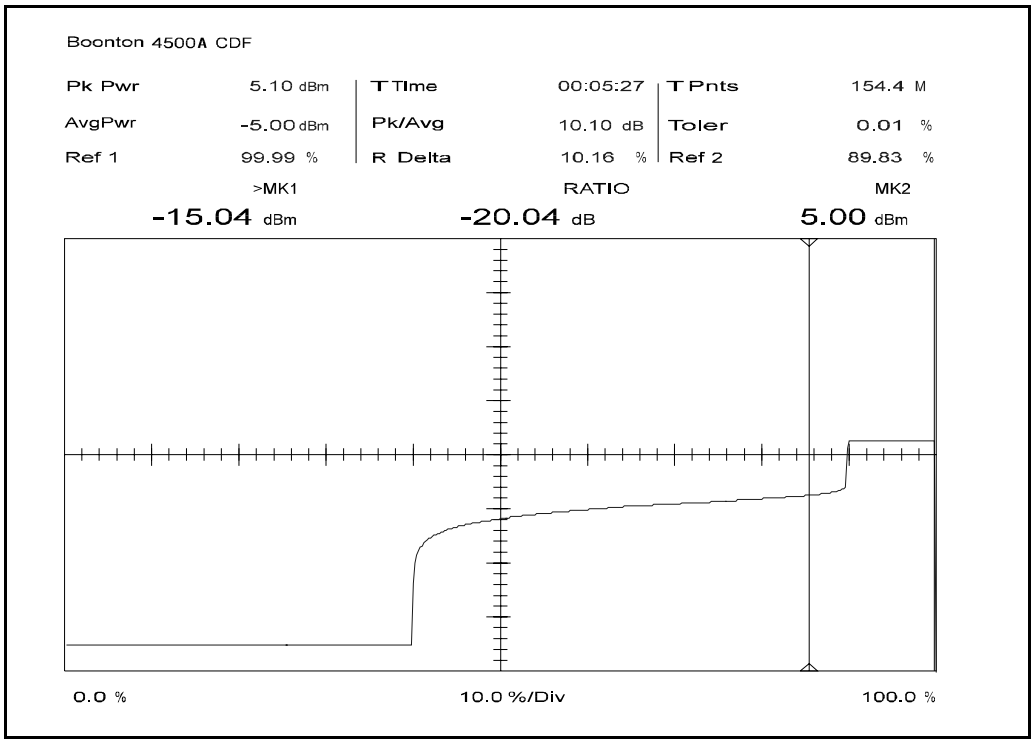


Figure 3-13. CDF Display

The 1-CDF plot presents the data as the percent of total reading at or above a selected power level.

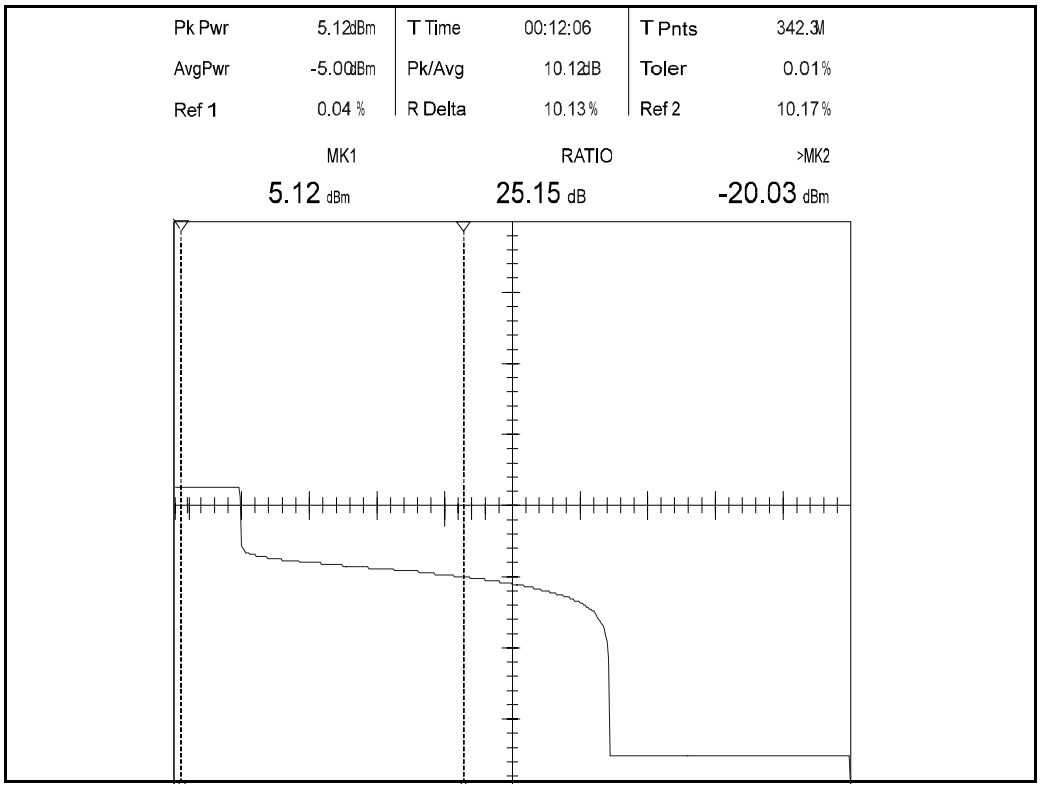


Figure 3-14.
1-CDF Display

The PDF mode plots the quantity of samples. Only the reference lines are functional and return the percent of total readings at a specific power level.

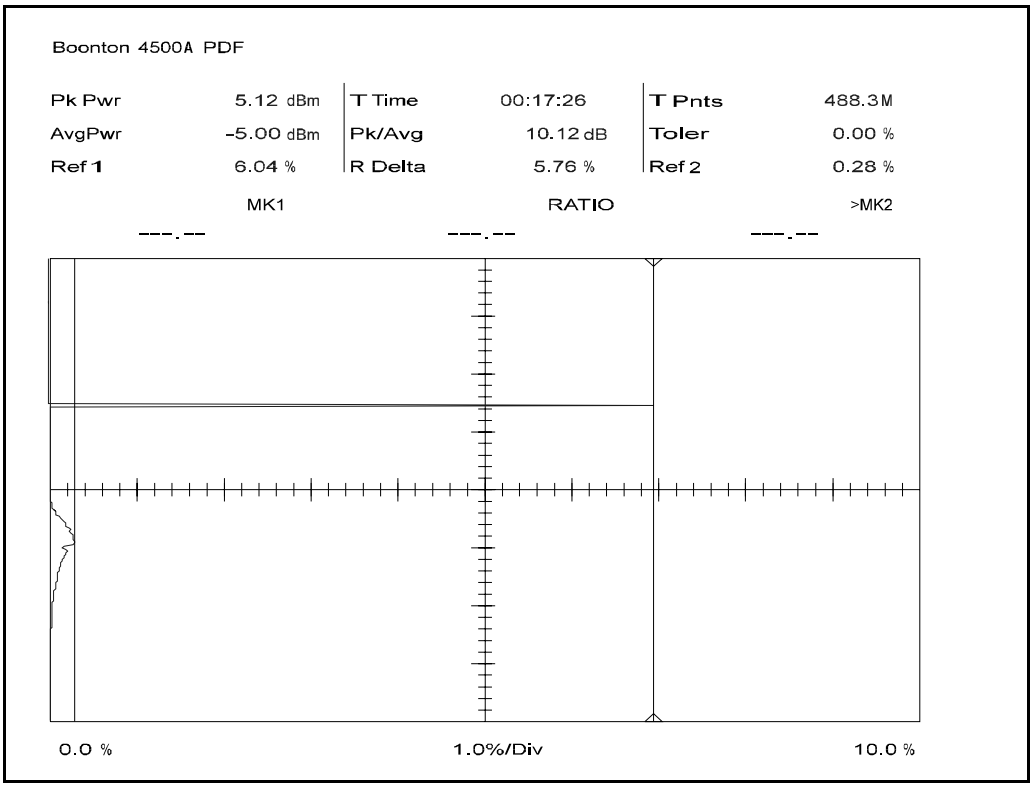


Figure 3-15.
PDF Display

| MENU ITEM | EXERCISE |
|---|---|
| | As an extra exercise, stop the measurement acquisition and use the reference lines to record a reading at +5dBm in CDF mode. Then use the total number of samples and calculate the total number of points that these percentages represent. |
| *Meas > # of Samples* | This selection sets a limit for the number of samples to be acquired. This acquisition takes place at about 500 kSa/sec for a single channel, and 250 kSa/sec for two channels running. When the total number of points has been reached, the instrument will enter STOP mode. |
| | When finished, leave the *Meas > Stat Mode* in 1-CDF. |
| TIME | Press the **TIME** function key and perform the following exercises to become familiar with the items in the *Time >* menu. |
| *Time > X-Axis* | This selection changes the horizontal scale to display all or only a portion of the waveform. Expand the X-axis using the knob until it reads 0.1% per division. This will expand the waveform data to its maximum resolution. |
| | With the instrument in the *Chan > Extensions > Stat Mode: 1-CDF* display mode, the maximum detail around the peak power will be shown at the left edge of the display. |
| *Time > % Offset* | Select the % Offset and use the knob to move the expanded display along the waveform. |

**Note**

The instrument will not accept an invalid combination of X-Axis and % Offset. The % Offset is automatically adjusted to a valid limit for the selected X-Axis. For example, when the X-Axis is set to 10% per division, the horizontal axis covers the range from 0% to 100%. On this setting the only valid % Offset is 0%. The % Offset is automatically limited when the X-axis is changed.

| | |
|---|---|
| TRIG | This menu has no active functions in the statistical mode. One menu displays the message *Trig > Trig Mode*: *Continuous* as a reminder that the instrument is continuously sampling the power envelope in the stat mode. |
| REF | Press the **REF** function key and perform the following exercises to become familiar with the items in the *Ref >* menu. |
| | The first step in using the reference lines is to enable them and assign them to a channel. |
| *Ref > Extensions > Ref CH Sel* | In the REF menu select the extension submenu. In this menu press the *Ref CH Sel* menu key until the selection reads Channel 1. The reference lines are now available and are positioned on the screen based on the vertical scale and vertical center selections for the selected channel; in this case channel 1. |
| | Press the **PREV** key to return one level up (*Ref >*), where the next command is located. |

| MENU ITEM | EXERCISE |
|---|---|
| *Ref > Ref Line 1* | If Ref Line 1 is inactive, press the *Ref > Ref Line 1* menu key to activate it. Use the spin knob or ◀ ▶ to move Ref Line 1 to the power level where the desired measurement is to be made. Move the Ref Line around the waveform and observe the percentage of occurence shown above the left-hand side of the waveform display in the parameter field. In 1-CDF this reading refers to the percentage of the total readings that are at or above the power level for the reference line and are displayed in the same color as the measured waveform. |
| *Ref > Ref Line 2* | If Ref Line 2 is inactive, press the *Ref > Ref Line 2* menu key to activate it. Use the spin knob to move Ref Line 2 a few divisions away from Ref Line 1. Observe that the active reference line is designated by triangles at left and right. Note that the reading above the right-hand side of the waveform display window corresponds to Ref Line 2. Note also that the absolute delta of the percent of Ref Line 1 and Ref Line 2 is displayed above the centerline of the waveform. |
| | This concludes the Practice Statistical Power Exercises. Press the **INIT** function key to clear the practice parameter settings and the Model 4500A will be ready to use. |

**Hint**

For best results, read the rest of this Instruction Manual through **Section 6 APPLICATION NOTES** before using the Model 4400A/4500A to make operational measurements.

# 4

# Operation

This section presents the control menus and procedures for operating the Model 4400A/4500A in the manual mode. All the display menus that control the instrument are illustrated and accompanied by instructions for using each menu item.

The operation section of the manual begins with instructions on how to calibrate the sensors that will be used with the instrument. This calibration is required to begin taking measures using the Digital Sampling Power Analyzer.

## 4.1 Calibration

The Model 4400A/4500A features a built-in automatic calibration (*AutoCal*) process, which calibrates both the peak power and CW measurement channels. An internal programmable calibrator outputs discrete incremental power levels covering the dynamic range of the sensor. Zeroing is adjusted for the High and Low video bandwidths and for the CW measurement mode.

**Note**

You must calibrate the instrument using the *AutoCal* routine whenever the Priority Message field reads "CH # Needs AutoCal."* At Power-On, the instrument checks its data buffers and will not perform measurements if a valid set of calibration data is not present.

Before beginning calibration a warm-up period may be required. If the instrument is not connected to main power or the rear panel power switch is off, a 30 minute warm-up period will be required before the sensors can be calibrated to full accuracy. The front panel switch is a standby switch, and the calibrator is always powered. If the sensors are not connected or the standby switch is off, the sensors will require 15 minutes to temperature stabilize.

Before initiating *AutoCal*, clear any pending errors by pressing **CLR**. To initiate *AutoCal*, press the **CHAN** function key, followed by the *Chan # > Calibration > AutoCal* menu keys. See Figure 4-1b. During *AutoCal*, progress is reported on the display status line. If necessary, you can halt *AutoCal* by pressing the **ESC** key.

**CF in dB**

If cables, adapters or other devices are in the signal path between the calibrator output and the sensor during the *AutoCal* procedure, *but are not to be used in the measurement path*, you must set the *Chan # > Extensions > CF in dB* parameter to assure proper instrument calibration. Do this by adding up the losses of the cables, adapters or other devices and entering the sum into the *Chan # > Extensions > CF in dB* window (Figure 4-1c) before initiating *AutoCal*. After *AutoCal* has run, reset the *CF in dB* parameter to zero and remove the cables and adapters before performing the measurement.

Calibration accuracy varies with signal power, as described in **Subsection 1.6 Specifications**. An analysis of calibration accuracy is presented in **Section 6.0 Application Notes.**

*The # symbol designates the numerals 1 or 2.

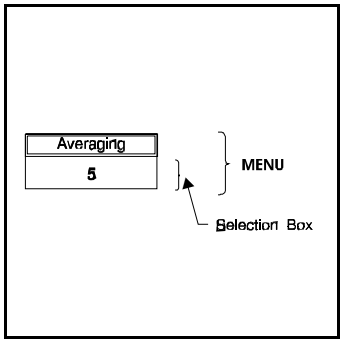


Inset. Menu Terminology

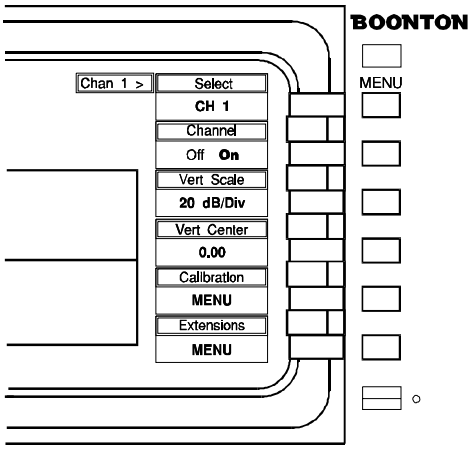


Figure 4-1a. *Chan 1* > Menu

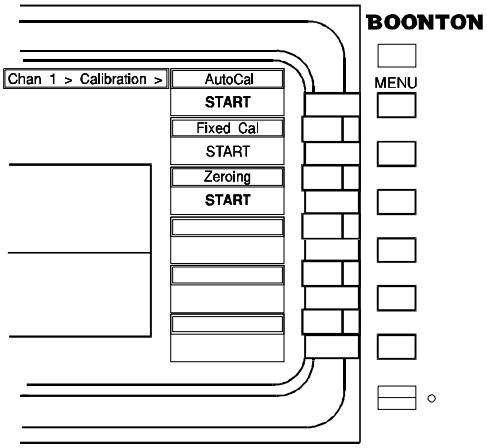


Figure 4-1b. *Chan 1* > *Calibration* > Submenu

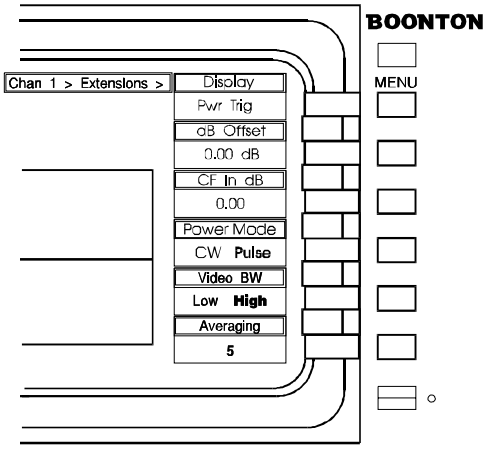


Figure 4-1c. *Chan 1* > *Extensions* > Submenu

Figure 4-1. *Chan 1* > Menu and Associated Submenus

## 4.2 Manual Operation

In the manual mode, the instrument is controlled from the front panel by selecting items from a system of screen menus. The menu structure is illustrated in Figure 4-2. To properly input commands and data using these menus, you must be familiar with the menu conventions described in the next subsection. Subsequent subsections provide detailed instructions for the control keys and menus:

| | |
|---|---|
| 4.6 | Top Level Menu |
| 4.7 | System Keys |
| 4.8 - 4.18 | Function Keys and Associated Menus |
| 4.19 | Automatic Operation |

## 4.3 Menu Conventions

This section of the manual describes the menu conventions used throughout Chapter 4 "Operation" and the rest of the manual.
The control menu conventions are summarized as follows:

1. Path description is a notation to indicate the entry location in the menu structure. The greater than ">" symbol is used to indicate each indented level of the menu. The first name should be one of the function keys. If the ">" symbol is the first character then the top level menu is being referenced. The top level can be accessed by pressing the "ESC" key. If a colon ":" symbol is part of the description, the value that follows the colon ":" is the choice of value in that menu.

   In the top level menu of the Model 4500A, > Measure Mode offers CW, Pulse, and three statistical measurement modes (CDF, 1-CDF and PDF). The Model 4400A does not support the statistical modes, so only CW and Pulse measurement modes are available. The following sections of this manual will use the symbol Pwr to indicate that a menu selection is only applicable when the instrument is in Pulse or CW power measurement modes. The symbol Stat will be used to indicate functions or menu selections that are only available in one of the three statistical modes, and are not applicable on the Model 4400A. *Pwr & Stat* ➪ indicates that the selection is available in any measurement mode. In a 4500A, the CHAN, MEAS, TIME, TRIG, MARK, and REF menus all have slight differences depending upon whether the instrument is set to a power or a statistical mode. The UTIL, SPCL, PRGM and DISP menus operate the same in any mode.

2. Entries in the menu selection boxes (see Figure 4-1 Inset) can be any of the following types:

   *Actions, Toggles or Parameter Values*

3. A single word or abbreviation in a selection box written in upper/lower case letters indicates an entry or selection menu; when the word in the selection box is written in all upper case, it indicates an Action or a secondary menu (submenu). Examples are presented in Figures 4-1.

   The *Chan 1 > Calibration > Fixed Cal* window in Figure 4-1b is an example of an *Action*. To initiate the indicated action, simply press the associated menu key.

# Boonton Model 4400A/4500A

Power Mode ➪

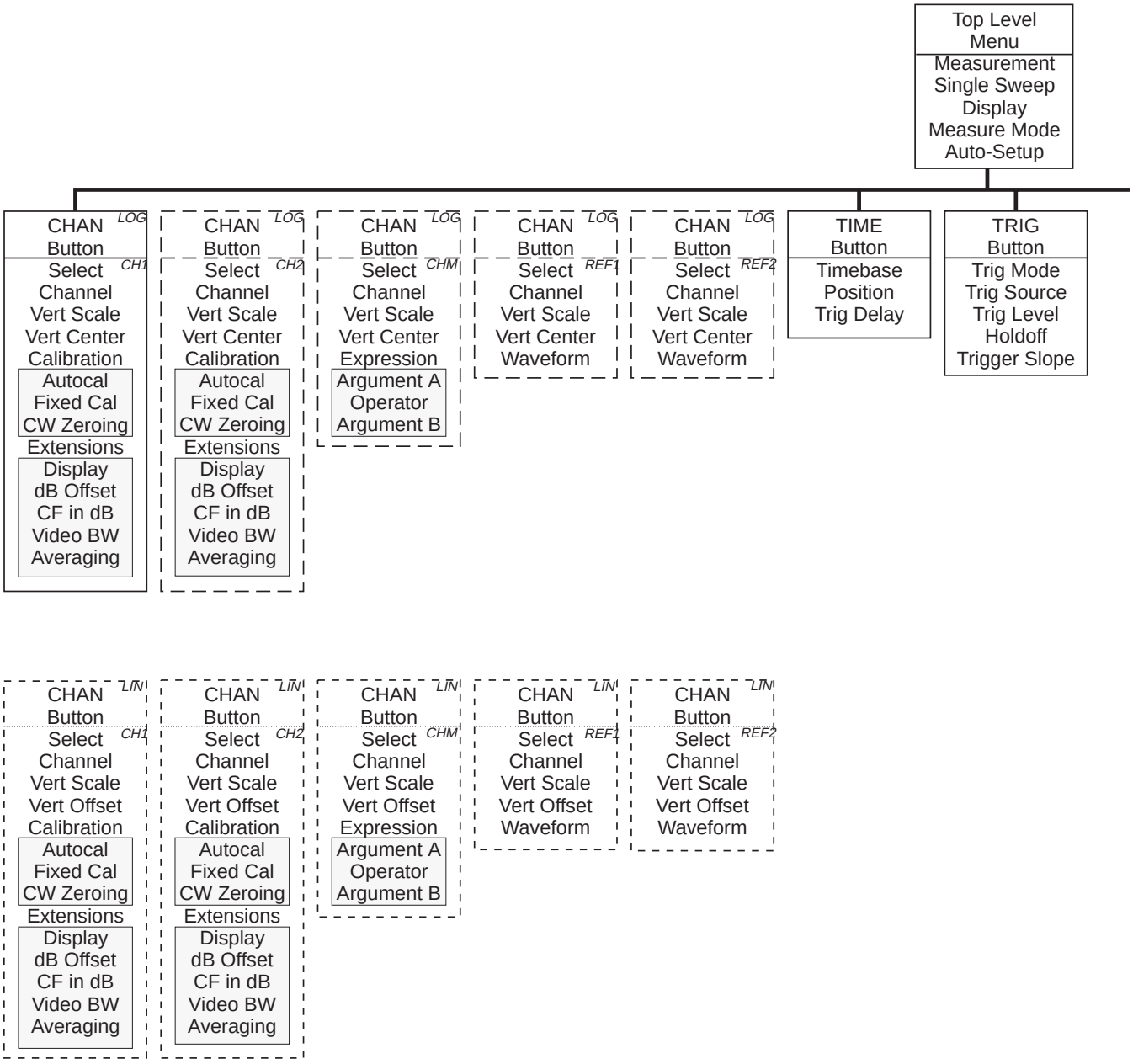


Figure 4-2. Control Menu Structure

# Boonton Model 4400A/4500A

Power Mode ➪

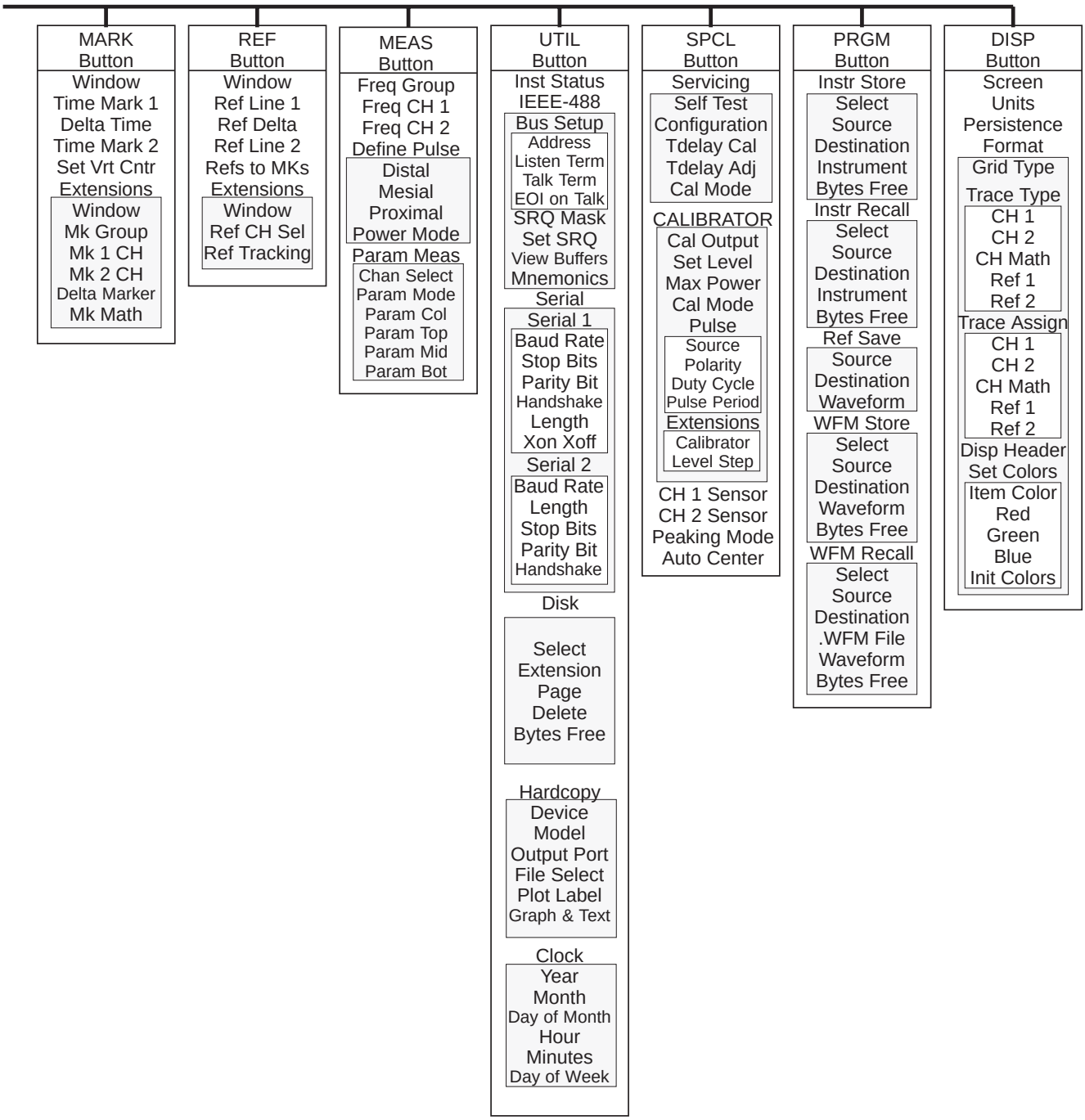


Figure 4-2. Control Menu Structure

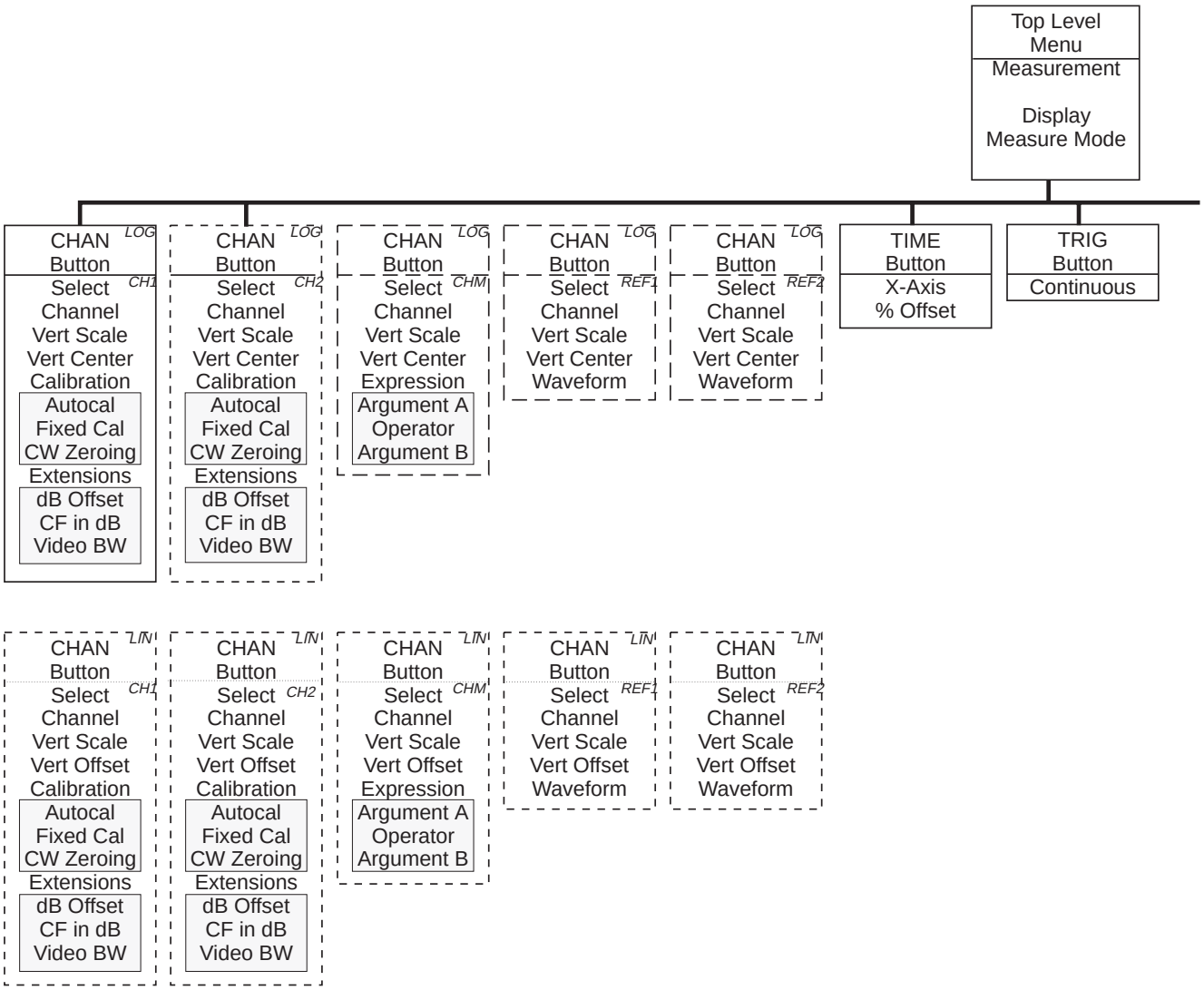


Figure 4-2. Control Menu Structure

# Boonton Model 4500A

Stat Mode ➪

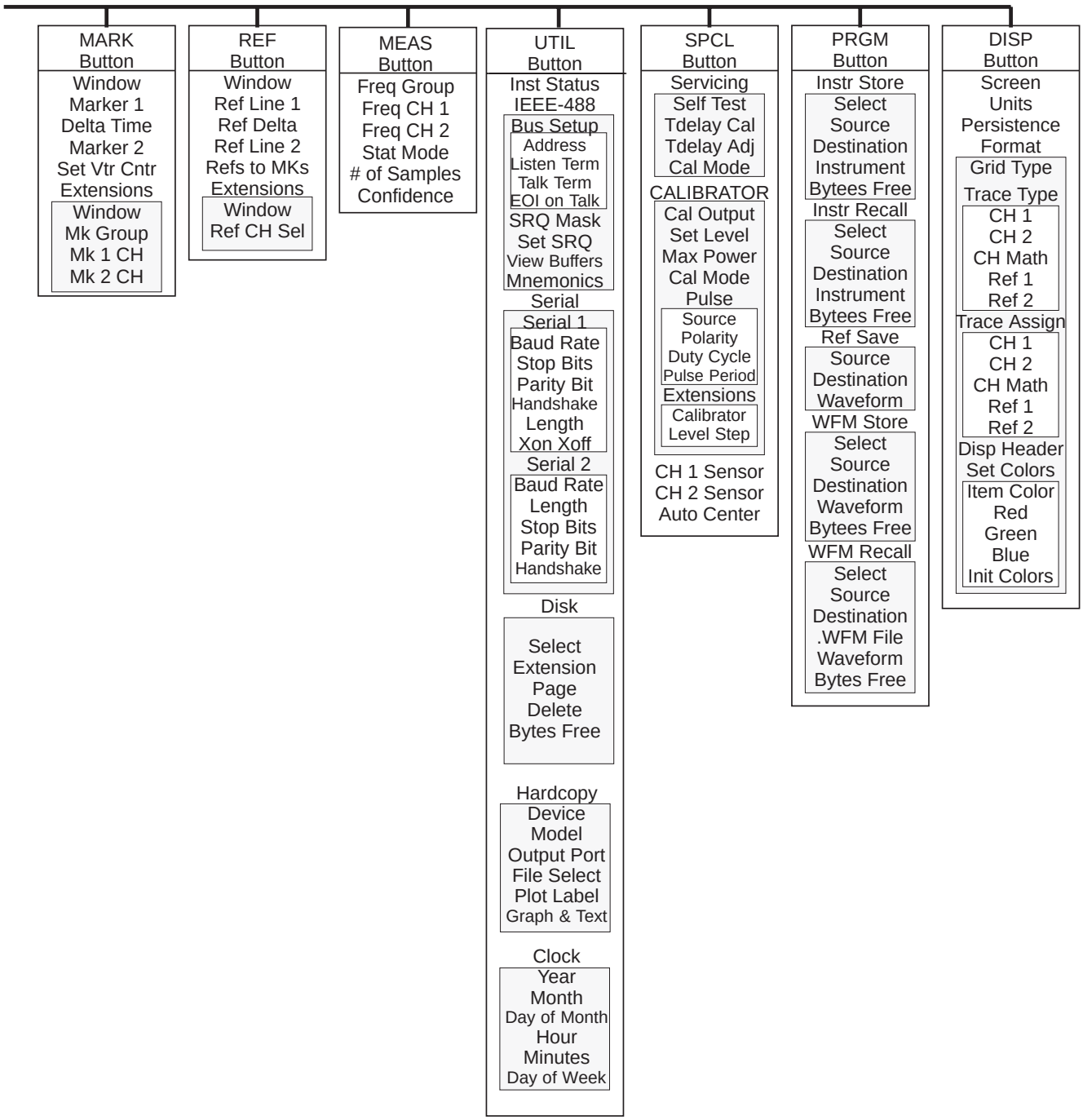


Figure 4-2. Control Menu Structure

4. Two entries (one of which is highlighted) appearing side-by-side within a menu indicate a *Toggle*. See, for example, the *Chan 1 > Channel* selection box in Figure 4-1a. Press the associated menu key to toggle the selection between "Off" and "On."

5. A *Parameter Value* in a selection box represents the current value of that parameter. See the *Chan 1 > Vert Center* selection box in Figure 4-1a. To change a Parameter Value, highlight the selection by pressing the associated menu key. Normally one of the selection boxes will be highlighted automatically each time a menu is activated. Highlighting is indicated by a color change of the selection box.

   When a parameter entry window is highlighted, you may use any of the data entry controls (spin knob, ◄ ► , or keypad) to adjust the parameter value. Pressing the menu key of a highlighted item deactivates the item and disables data entry.

6. *Parameter Values* can either be continuously variable throughout a range, or restricted to a predefined set of discrete values. For discrete sets, the spin knob and arrow keys are programmed to select only valid values in the set. For discrete ranges, if you key in an incorrect value, the instrument will automatically select the nearest correct value. If you input a value outside the range of the parameter, the instrument will respond with the error message "Number Entry Over (Under) Limit."

7. The word "MENU" appearing in a selection box indicates that there is a submenu of additional selections at the next lower menu level. In the menu shown in Figure 4-3a, for example, when you press the *Disp > Trace Type* menu key, you will call up the *Disp > Trace Type >* submenu illustrated in Figure 4-3b.

8. The word "REPORT" in a selection box indicates that a text display of data related tothe associated item is available. In the example of Figure 4-4a, pressing the *Spcl > CH 1 Sensor* menu key will display the text report illustrated in Figure 4-4b.

9. Pressing the **CLR** data entry key (see Figure 3-1) clears errors, text reports and any entry in process.

10. Pressing a menu key associated with the *Action* entry "CENTER", causes the instrument to center the waveform at the active Time Mark. See the *Mark > Set Vert Cntr* window in Figure 4-5.

    These ten rules apply generally to all the Model 4400A/4500A control menus. By becoming familiar with them, you will expedite instrument operations and avoid errors.

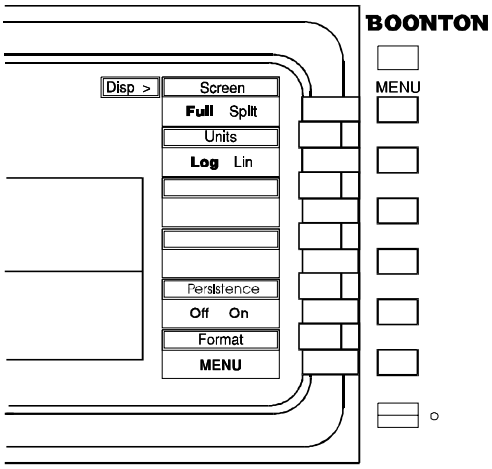


Figure 4-3a. *Disp* > Menu

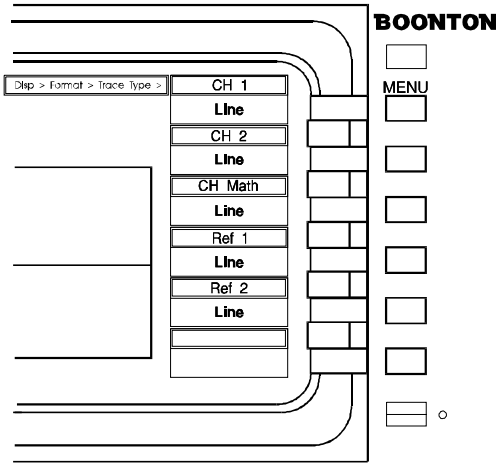


Figure 4-3b. *Disp* > *Trace Type* > Submenu

Figure 4-3. *Disp* > Menu and Associated Submenu

Figure 4-4. *Spcl* > Menu and Associated Text Report

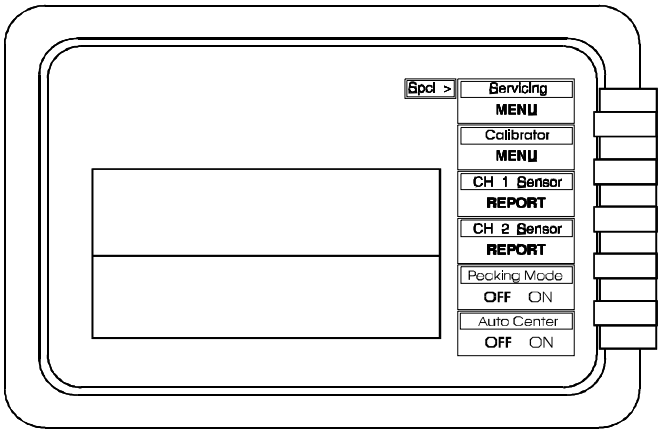


Figure 4-4a. *SPCL* > Menu

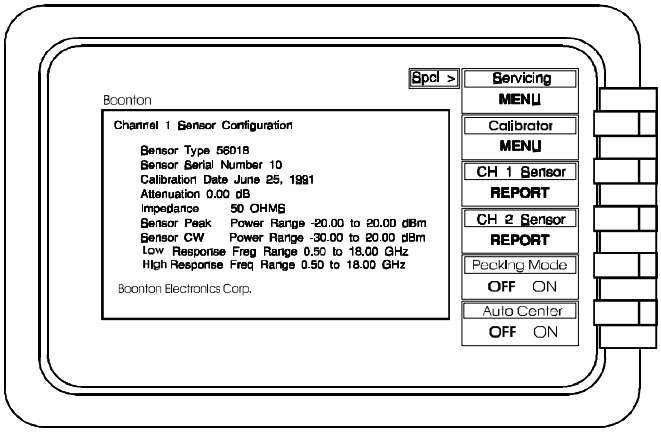


Figure 4-4b. Chan 1 Sensor Configuration Report

Figure 4-5. *Mark* > Menu

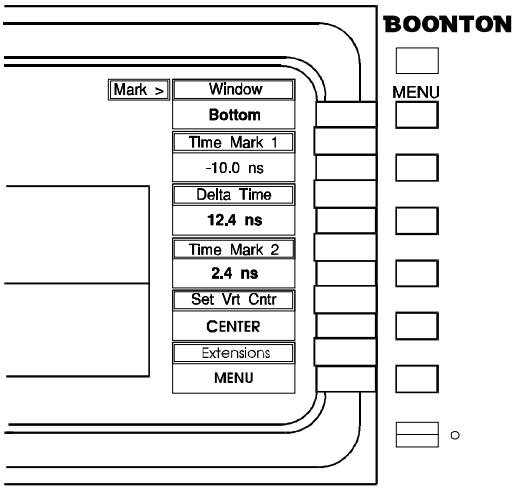

**Note**

Help screens for each menu describe the menu items. **See Subsection 4-7 System Keys**. Press the **HELP** key to access the help screen for the current menu. Press **ESC** or press the **HELP** key again to return to the previous display mode.

In following subsections you will be introduced to the Top Level Menu and operating procedures for the three primary key groups: System, Function, and Data Entry.

## 4.4 Data Entry Controls

The numeric keypad illustrated in Figure 4-6 is one of the three data entry controls that enable you to enter parameters for the various control functions. The keypad is subdivided into three areas: numerals, units of measure and controls.
The ten numerals, the minus sign and the decimal point are used to enter numerical data. Six “units of measure” keys are provided for you to use to complete numerical entries. When entering time intervals, press the “m” after entering the numbers to indicate milliseconds or milliseconds/division; press “μ” to indicate microseconds or microseconds/division; and press “n” to indicate nanoseconds or nanoseconds/division. Press **ENT** to indicate seconds or seconds/division. Pressing any one of these “units” keys enters the numerical data.

When entering numbers that are not time intervals (dBm for example), press the **ENT** key after keying the number. Pressing one of the units keys after entering a non-time-related number has the same effect as pressing **ENT**.

The units keys labeled G, M, and k are used to enter frequencies in Gigahertz, Megahertz, and kilohertz, respectively. They operate in a manner similar to the time-related units keys.

You may cancel a value before it is entered by pressing the **CLR** key. The **CLR** key is also used to clear status and error messages from the display.

Two alternative controls are provided for entering selections and numeric data. These are spin knob and the right/left arrow keys [◄ ►]. Rotate the spin knob clockwise to decrease the value in the active display window; clockwise to increase it. Detents in the knob rotation mark discrete values in the selection range. The arrow keys also select discrete values: the left arrow increases the value in the selected display window; the right arrow decreases it. Holding down an arrow key causes it to repeat.

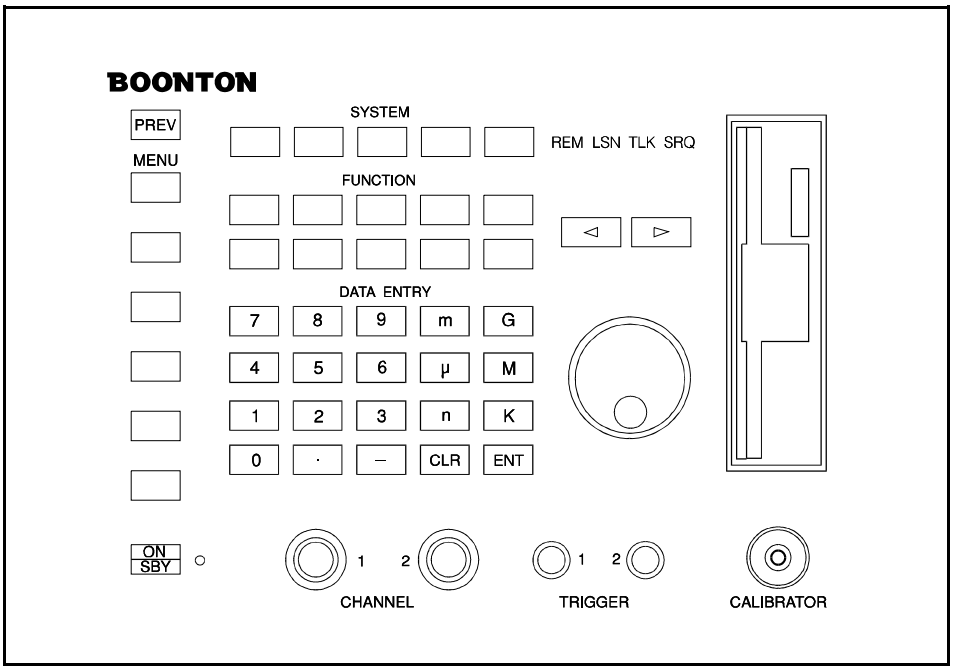


Figure 4-6. Data Entry Keypad

## 4.5 Display Data

The 4400A/4500A has four display modes. These are the Graph mode, Text mode, Report mode, and the Help mode. Whichever mode the display is in, the menu portion of the display is always present and active.

The HELP mode is activated by pressing the HELP key. When in this mode the instrument will display up to three lines of information related to the active menu. The menus are active in the help mode. This allows the operator to move to any menu level and make multiple instrument configuration changes without leaving the help mode. To leave the help mode press the HELP key again or the ESC key.

The REPORT mode is active when a report is requested by a menu selection or an IEEE-488 command. Each report is formatted to provide the specifically requested information. The report mode is exited by pressing the ESC key or selecting another menu option.

The TEXT mode presents a tabular display of measurement values for channels 1 and 2. In Pulse measurement mode, this table consists of all 14 automatic pulse measurements. In all three Stat ⇨ measurement modes (Model 4500A only), power statistics, marker and reference line values and global measurement status parameters are shown. TEXT mode does not display any values when the measurement mode is set to CW.

The GRAPH mode is the primary display mode for the instrument. After initalization the display is in the graph mode. The graph mode includes a 501 by 281 waveform display area, header field, menu path field, priority message field, error message field and general message field.

The header field is in the top left corner. Its options include model number, time and date, sensor temperature and no message.

The menu path is located in the upper right of the display. It shows the current menu location in the menu indentation structure. See Figure 4-2 for menu information.

The error message is below the waveform display on the right. The default color is red. Errors are cleared by pressing the ESC or CLR key.

The general message field is at the bottom of the display. It shows temporary information about the status of the instrument.

## Priority Messages

The priority message is a field located below the waveform display in the graph mode. This field displays a series of messages based on a pre-assigned priority. If multiple conditions exist only the highest priority message is displayed. This approach is used since for normal operation no messages should be displayed. If a message is displayed, corrective action should be taken to address the source of the problem, at which time the messages will be cleared. In the case where only one channel is being used, the other channel should be turned off which will disable any error conditions associated with that channel.
The priory is:

| | |
|---|---|
| Measuring Stopped!! | **Highest** |
| CH 1 & 2 No Sensor | |
| CH 1 No Sensor | |
| CH 2 No Sensor | |
| CH 1 & 2 Need Autocal | |
| CH 1 Needs Autocal | |
| CH 2 Needs Autocal | |
| CH 1 & 2 Temp Drift | |
| CH 1 Temp Drift | |
| CH 2 Temp Drift | |
| Auto Triggering | |
| Waiting for Trigger | |
| Capturing New Data | |
| (Blank Field) | **Lowest** |

The "No Sensor" messages indicate that the instrument cannot detect a sensor connected on the specified channel.

The "Autocal" message indicates the need to perform a new calibration before measurements can be taken. This is required when a different sensor is connected to the selected channel.

The "Temperature Drift" message indicates that the sensor has drifted more than ±4°C from the original autocalibration temperature. For maximum accuracy a new autocal should be performed on the channel. If not, a small additional error can be introduced into the measurements.

The "Auto Triggering" message indicates that the instrument is in the auto-triggering mode. When in this mode the instrument expects that a valid trigger event will occur at regular intervals or the instrument will time-out and generate it's own trigger event. The autotrigger table ( Table 4-10) shows the typical time-out period for each timebase. This mode is useful when the signal being measured drops below the trigger level, the signal is a CW level or is not known. The auto-trigger will give the operator a snap shot of the signal that the instrument is capturing. If this is an undesired effect then switch the instrument to the trigger-normal mode in the TRIG > TRIG MODE menu.

The "Waiting for Trigger" message indicates that there is no valid measurement data, the instrument is in the trigger-normal mode, and waiting for the first valid trigger event. Once any valid trigger event occurs the message will be cleared.

The "Capturing New Data" message indicates that the instrument is triggering and capturing new measurements, but there is not enough data captured for the instrument to complete the assigned averaging. If two channels are active the channel with the largest averaging value is used to determine when the message is cleared.

## 4.6 Top Level Menu

The commands in the To Level Menu (Figure 4-7) enable you to control the measurement modes. These functions are detailed in Table 4-1. All commands affect both measurement Channels 1 and 2.

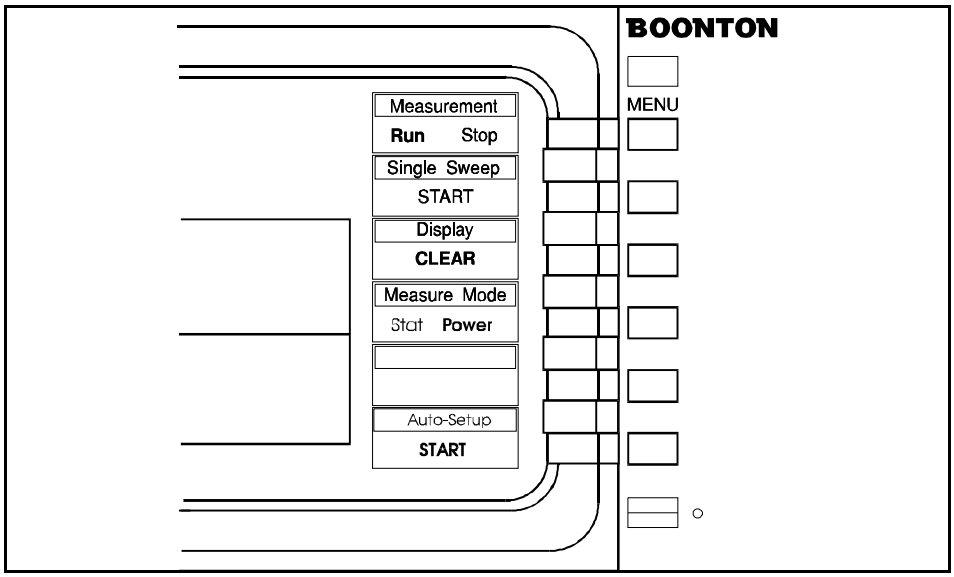


Figure 4-7. Top Level Menu

**Table 4-1. Top Level Menu**

| Menu Item (Type) | Selections | Function |
|---|---|---|
| *Measurement* (Toggle) | *Pwr & Stat* ➪ **Run**, Stop | *Controls the capture of new data*<br><br>Press the Measurement menu key to stop the capture of data by the measurement channel(s). Press it again to restart the data capture. Marker and Ref Line measurements continue to be made whendata capture is stopped. |
| *Single Sweep* (Action) | *Pwr* ➪ START | *Captures data for one trigger event*<br><br>When data capture has been stopped (see previous discussion of the *Measurement* menu key), you can press the *Single Sweep* menu key to capture the data gathered from one trigger event. Pressing the key repeatedly adds new data for each capture. The number of data points captured varies with the timebase. To optimize the display, use the *Disp > Trace Type* menu key to select “Points.” |

**Table 4-1. Top Level Menu** (continued)

| Menu Item (Type) | Selections | Function |
|---|---|---|
| *Display* (Action) | *Pwr & Stat* ➪ CLEAR | *Clears the waveform display and the internal data buffers*<br><br>Press the *Display* > menu key to clear the waveform display and any data in the measurement data buffers. If the instrument is in the Run mode, capture of new data begins immediately. If the instrument is in the *Stop* mode, the measurement data buffers are cleared and the waveform display is blanked. Data capture will resume when *Measurement* > *Run* is initiated.<br><br>SRQ support is inclulded when measurement is ready and priority message indicates data being captured. SRQ support is covered in detail in the Remote Operation Section (Section 5.4). The display clear function is used to clear the existing measurement data. This function will clear the 02h bit which is used for measurement ready but not the active service request. To clear the service request use the ESC key or the IFC bus command. If the service request occurs after the display clear command is executed the bus controller will read a 64 (40h) which will clear the SRQ but does not instruct the computer that measurement data is ready.<br><br>When in the *Pwr* ➪ mode, clearing accumulated data is recommended when the *Chan #* > *Extensions* > *Averaging* parameter is large. This causes much data to be accumulated and slows the computation of the average signal. Pressing *Display* clears that data so that old information does not influence the data display.<br><br>When in the *Stat* ➪ mode, the Clear key will discard old information and begin capturing new data. This also includes resetting the total time and the total points counters to zero. |

**Table 4-1. Top Level Menu** (continued)

| Menu Item (Type) | Selections | Function |
|---|---|---|
| *Measure Mode* (Toggle) | *Pwr* ➪ Pulse, CW<br><br>*Stat* ➪ CDF, 1-CDF, PDF | *Selects the measurement mode for the entire instrument.*<br><br>Pressing the measurement mode menu key toggles the instrument between the power mode and the stat mode. This change affects the entire instrument. The measurement capture, processing , channel selection, data displays and menu structure all change.<br><br>In the pulse mode (*Pwr* ➪) the instrument operates as a peak power meter. The instrument requires a valid trigger event. Instantaneous power measurements are taken at random intervals. Points are tracked in time relative to the trigger event. The instrument reconstructs the waveform from points that fall within the screen's time window. This window is defined by the timebase and trigger delay. All data that is not on the screen is discarded. Markers return measurements of power at specific time offsets from the trigger point. All automatic measurements are limited to the instrument's time window.<br><br>In CW mode (Pwr ➪) the instrument operates as a CW power meter, measuring the average power of an unmodulated (CW) carrier. This mode uses an internal high-gain, low-noise signal path to permit accurate CW power measurements to be made with peak power sensors, and typically offers about 10dB more dynamic range than Pulse mode.<br><br>In the three stat modes (*Stat* ➪) the instrument operates differently. There is no requirement for a trigger signal. The instrument continuously samples the RF signal and processes all of the samples. The data is used to determine the peak, average and minimum power levels. In addition, the data can be organized into a cumulative distribution function plot or a probability density function plot. See Chapter 6, Applications for more information on the statistical relationship of the captured data. |
| *Auto-Setup* (Action) | *Pwr* ➪ START | *Initiates the auto-setup process.*<br><br>Auto-setup will adjust the vertical scale, vertical offset, trigger level, timebase and trigger holdoff for channel 1 and 2. The instrument uses the currently selected trigger source to search for the trigger event.<br><br>The setup will display the full amplitude of the pulse with at least one full cycle. |

**Note**

You *cannot* obtain the average value of a pulse waveform by selecting the *CW* measure mode. To obtain average power, use the average power in the automatic measurement mode or average the power between markers (see Table 4-11).

## 4.7 System Keys

The system keys are located at the top of the front panel control area. See Figure 4-8. They control functions related to the operating mode, display mode, hard copy output and configuration.

**PREV**

Pressing **PREV** returns control to the next *higher* menu in the menu structure (Figure 4-2), unless the last menu displayed was from a different branch. In that case, pressing **PREV** returns to the *last* menu displayed.

**LOCAL**

**ESC**

In the Local mode:
Pressing **ESC/LOCA**L halts a process, clears reports and displays the Top Level Menu.

In Remote mode:
Pressing **ESC/LOCAL** returns the instrument to the Local mode.

The **LOCAL** key is effective only when the analyzer is remote-enabled over the IEEE-488 bus and the **REM** annunciator is illuminated. In Remote mode, all other front panel controls are deactivated, except the **LOCAL** and **ON/SBY** key.

**GRAPH**

**TEXT**

Pressing **TEXT/GRAPH** toggles the display between the graphic mode and a text screen summarizing results of automatic signal measurements. The text display is shown in Figure 4-9.

**HELP**

Pressing the **HELP** key enables the Help mode and displays the Help screen associated with the current menu. See Figure 4-10. In the Help mode the instrument continues to operate and all controls remain active. The **HELP** key operates as a toggle; press it to deactivate the Help mode and return to the graphic display. You may also press the **ESC** key to deactivate the Help mode.

**PLOT**

After the plotter parameters are set using the **UTIL** menu, pressing **PLOT** will direct the Model 4400A/4500A to output the current display image to a (user furnished) output device. See Appendix B, for a description of printer/plotter features and operating instructions.
The output device is selected under **UTIL** > **PLOTTER** > **MENU**.

**INIT**

Press **INIT** to initialize the parameters in Table 3-3 to their default values. Use **INIT** to cancel an undesired set of configuration parameters, or whenever you are uncertain of the instrument configuration.

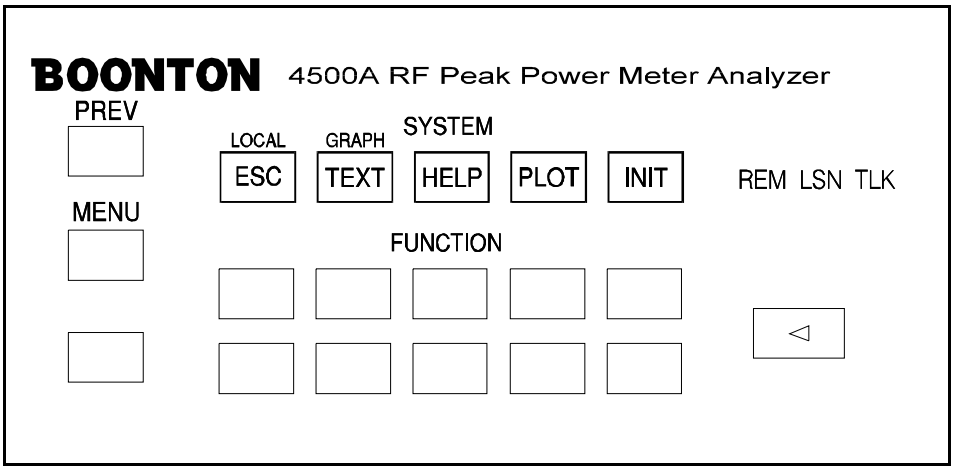


Figure 4-8. System Keys

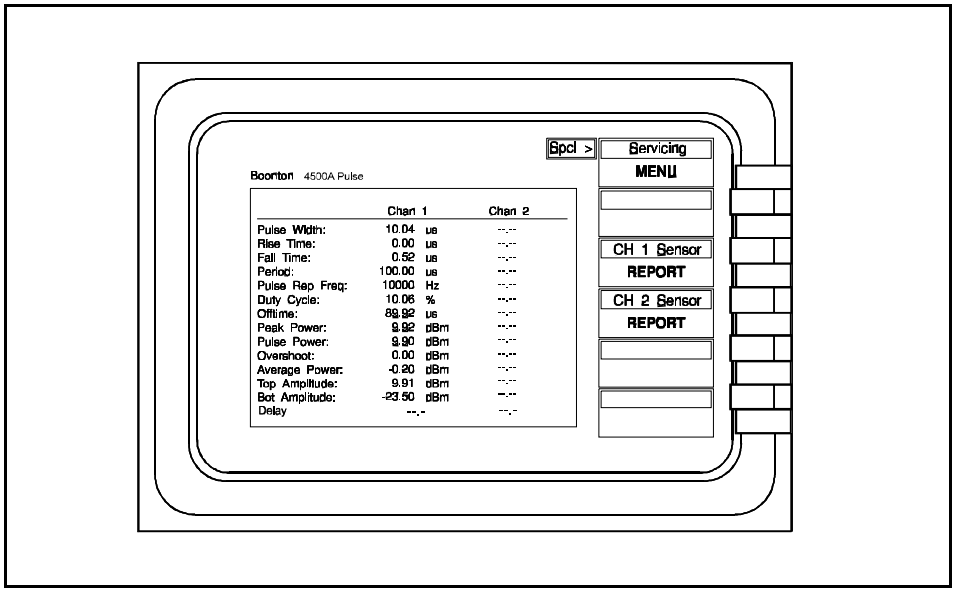


Figure 4-9. Text Mode Display in Power Mode

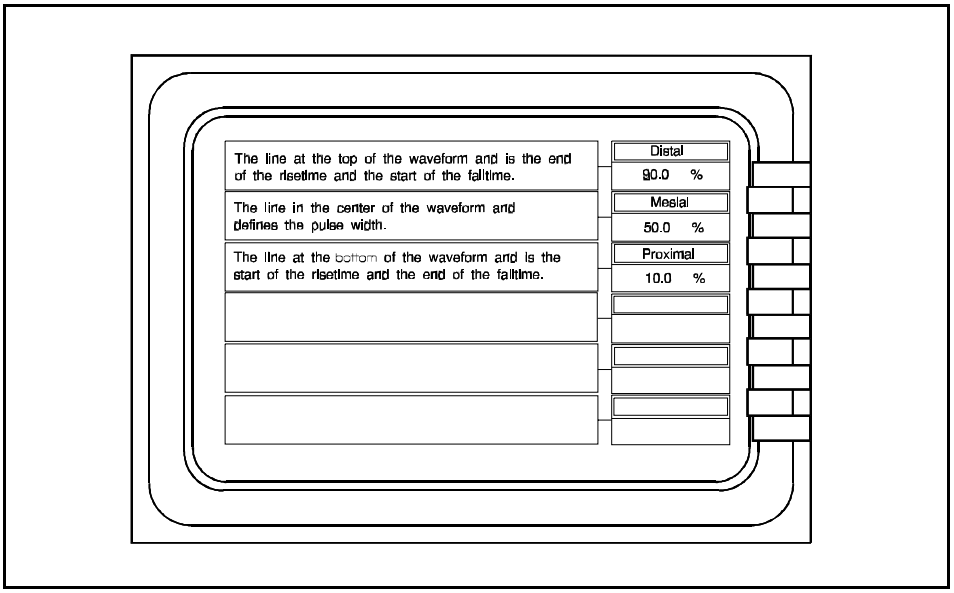


Figure 4-10. Typical Help Screen

## 4.8 Function Keys

The ten function keys illustrated in Figure 4-11 access the principal control menus of the Model 4400A/4500A. Together with associated submenus, they enable you to establish the measurement display modes and analyzer configurations; query the processor database; perform and record measurements; perform internal diagnostics; and communicate with other devices over the IEEE-488 bus and serial communication ports.

The next ten subsections (4.9 through 4.18) discuss the ten function keys and describe the selections in their associated menus and submenus.

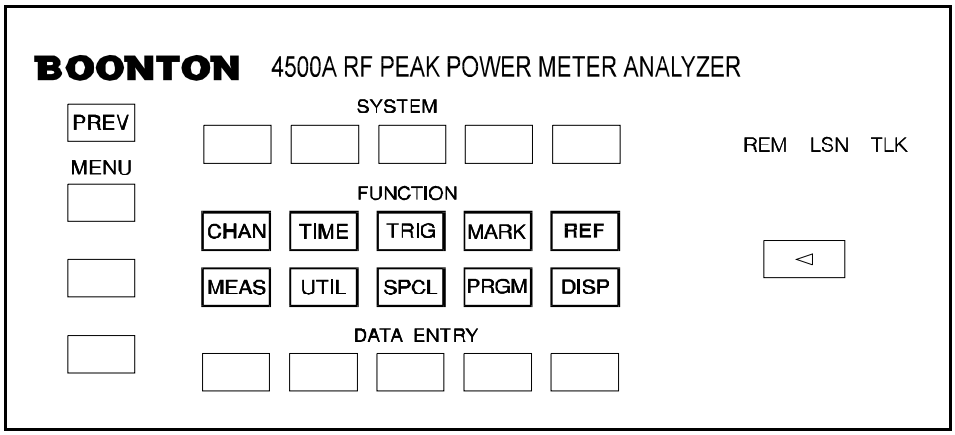


Figure 4-11. Function Keys

## 4.9 CHAN Key and *Chan # >* Menu

The **CHAN** key activates the *Chan # >* menu and associated submenus, which enable you to calibrate the instrument, specify its display parameters, measurement offset, and detector bandwidth. See Figure 4-12.

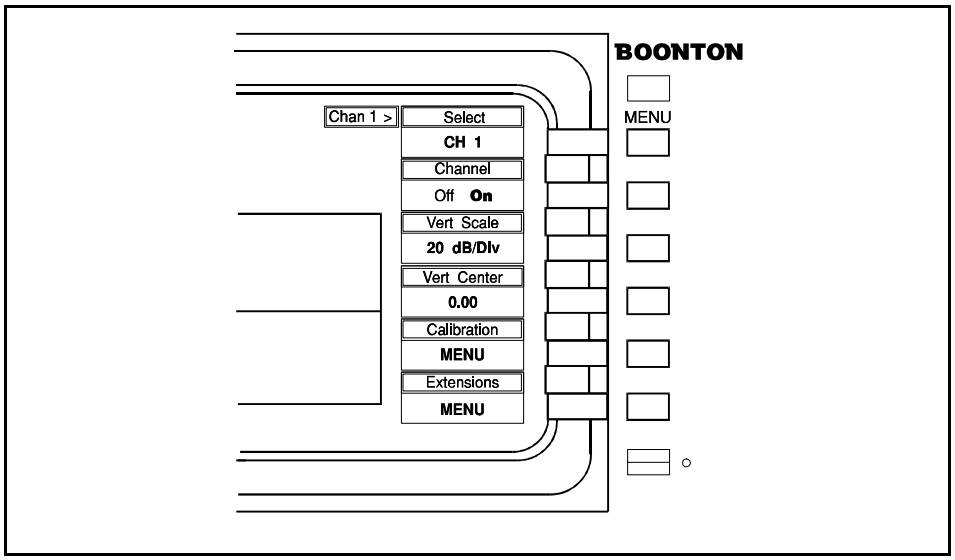


Figure 4-12. *Chan # >* Menu

## Menu Configuration

The configuration of the *Chan # >* menu depends on the item selected in the *Chan # > Select* window.

Figure 4-12 presents the *Chan # >* menu, which is displayed when the instrument is initialized. (*Chan 1 >* is the default menu.) The *Chan # >* menu items enable you to control the display of the measurement channel. Instructions for using the *Chan # >* menu are presented in Table 4-2.

Figure 4-16 illustrates a second version of the *Chan >* menu that appears when "CH Math" has been selected. A submenu of the *Chan Math >* menu enables you to control the display of the calculated sum or difference of the detected Channel 1 and/or Channel 2 signals. Instructions for the *Chan Math >* menu are presented in Tables 4-5 and 4-6.

Figure 4-18 shows the *Chan > Ref1 1 menu,* which appears when "Ref 1" has been selected. The Ref # waveform is a "snapshot" of either the Channel 1 or Channel 2 waveforms, which is created and stored for later reference. The menu items that enable you to control the display of the reference waveform are explained in Table 4-7.

The default *Chan # >* menu (Figure 4-11) contains two submenus of additional functions:

Figure 4-13 illustrates the *Chan # > Calibration >* submenu, which is used to initiate the calibration and zeroing functions. Instructions for using the *Chan # > Calibration >* submenu are presented in Table 4-3.

Figure 4-14 illustrates the *Chan # > Extensions >* submenu, which provides access to a number of additional setup functions. Instructions for using the *Chan # > Extensions >* submenu are presented in Table 4-4.

## Figures and Tables

The figures and tables which describe the *Chan # >* family of menus are summarized as follows.

| Menu or Submenu | Figure | Table |
|---|---|---|
| *(Default) Chan # >* | 4-12 | 4-2 |
| *Chan > Calibration >* | 4-13 | 4-3 |
| *Chan > Extensions >* | 4-14,15 | 4-4 |
| *Chan Math >* | 4-16,17 | 4-5,6 |
| *Chan > Ref # >* | 4-18 | 4-7 |

## Table 4-2. *Chan # >* Menu

| Menu Item (Type ) | Selections | Function and Operation |
|---|---|---|
| *Select* (Toggle) | Pwr & Stat ➪<br>CH1, CH2<br>CH Math<br>Ref 1, Ref 2 | Selects the channel or function that will be affected by the rest of the menu selections.<br><br>You select “CH 1,” “CH 2,” “CH Math,” “Ref 1” or “Ref 2” by pressing the *Chan # > Select* menu key to select the desired channel. Any display parameters you set while “CH 1” is current will apply to the signal connected to the Channel 1 input. Similarly, any changes you make to the display parameters while “CH 2,” “Ref 1,” “Ref 2,” or “CH Math” are current will affect the display of that signal or function. |
| *Channel* (Toggle) | *Pwr & Stat* ➪<br>Off, On | *Turns the measurement channel off or on*<br><br>Disable the measurement by pressing the *Chan > Channel* menu key. Press it again to restore the display.<br><br>Disabling the measurement channel inhibits temperature monitoring and any priority messages related to sensor disconnection, sensor replacement, AutoCal required, and frequency downloading status. Disabling the channel will turn off the display of the power and trigger waveforms, but will not affect the internal or external triggering of the channel. |
| *Vert Scale Log* (Numeric) | *Pwr & Stat* ➪<br>Discrete Range:<br>Full Screen<br>0.1 to 20 dB/Div<br><br>Split Screen<br>0.2 to 40 dB/Div | *Sets the vertical sensitivity of the display in log mode*<br><br>Use this control to size the vertical amplitude of the waveform display to fit the display area, or to magnify a waveform segment of particular interest.<br><br>Press the *Chan # > Vert Scale* menu key to activate this window. Then use any number entry to step the vertical sensitivity of the display to any 1-2-5 sequence value in the specified range. Larger sensitivity values reduce the height of the display; smaller values increase it. |

## Table 4-2. *Chan # >* Menu

| Menu Item (Type ) | Selections | Function and Operation |
|---|---|---|
| *Vert Scale Linear* | Pwr *& Stat* ➪<br>Discrete Range:<br>Full Screen<br>1 nW to 50 MW/Div<br><br>Split Screen<br>2 nW to 1 MW/Div | *Sets the vertical sensitivity of the display in linear mode*<br><br>Press the *Chan # > Vert Scale* menu key to activate this window. Then use any number entry to step the vertical sensitivity of the display to any 1-2-5 sequence value in the specified range. Larger sensitivity values reduce the height of the display; smaller values increase it.<br><br>Linear values are always positive. The bottom of the screen is zero power or the offset level. |
| *Vert Scale Trig View* | *Pwr* ➪<br>Discrete Range:<br>Full Screen<br>100 mV to 1 v/Div<br><br>Split Screen<br>200 mV to 2 v/Div | Sets the vertical sensitivity of the display for trigger view<br><br>Press the *Chan # > Vert Scale* menu key when the channel is in the trigger view mode to activate this window. Then use any number entry scheme to adjust the value in a 1-2-5 sequence in the specified range. Larger sensitivity values reduce the height of the display; smaller values increase it.<br><br>Number entry is always truncated to the lower value. Entering 199 mV will set the vertical scale to the 100mV scale. |
| *Vert. Center Log* (Numeric) | *Pwr & Stat* ➪<br>Continuous Range:<br>-99.99 to +99.99 dB | *Sets the power level at the vertical center of the display*<br><br>Use this control to shift the waveform display vertically to the desired position in the window. Press the *Chan 1 > Vert Center* menu key to activate this window. Then use the keypad to shift the vertical center of the display to the desired power level. Increasing the power level moves the waveform down; decreasing the power level moves it up. |
| *Vert Offset Linear* | *Pwr & Stat* ➪<br>Continuous Range<br>0 to 99.99 Divs: | *Sets the power level at the bottom of the display for the selected channel.*<br><br>When the offset is zero, the bottom of the screen is zero power. Changing the offset allows the viewing of data at larger power levels. Markers continue to make readings on the waveform when it is off the screen.<br><br>The exact value of the offset is related to the selected vertical scale. If the vertical scale is 1 mW/Div then a vertical offset of 1 division is an offset of 1 mW and a vertical offset of 99 divisions is an offset of 99 mW. |

**Table 4-2.** *Chan # >* **Menu** *(continued)*

| Menu Item (Type ) | Selections | Function and Operation |
|---|---|---|
| *Vert Offset Trig View* | *Pwr* ➪ Continuous Range: -3 to +3 V | *Use this control to shift the waveform display vertically to the desired position in the window.*<br><br>Press the *Chan 1 > Vert Center* menu key to activate this window. Then use the keypad to shift the vertical center of the display to the desired voltage level. Increasing the voltage level moves the waveform down; decreasing the voltage level moves it up. |
| *Calibration* (Submenu) | *Pwr & Stat* ➪ MENU | *Accesses the Chan 1 > Calibration > submenu*. See Table 4-6. |
| *Extensions* (Submenu) | *Pwr & Stat* ➪ MENU | Accesses the Chan 1 > Extensions > submenu. See Table 4-7. |

## Calibration

A discussion of the internal calibration capability is presented in **Subsection 4.1 Calibration**. Figure 4-15 illustrates the *Chan # > Calibration >* submenu and Table 4-3 provides instructions for its use.

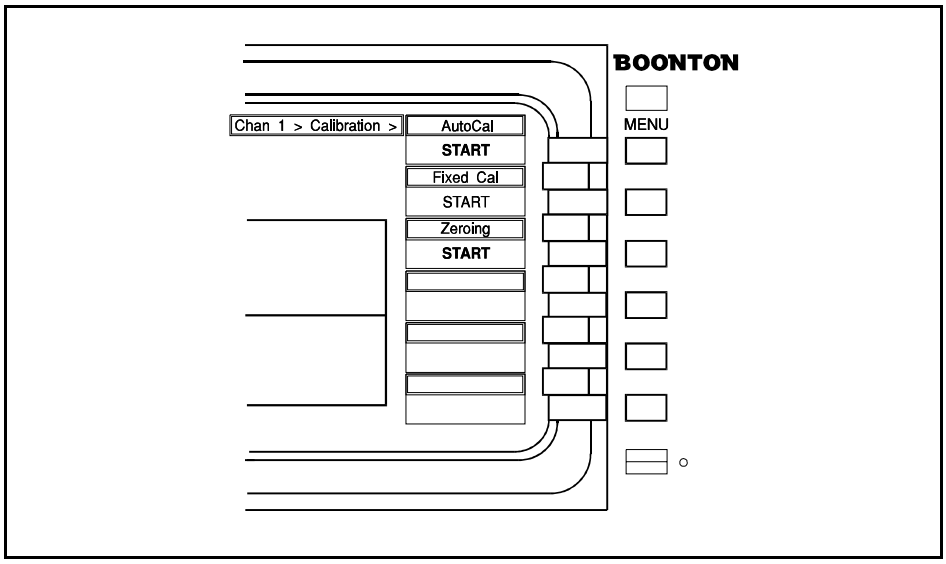


Figure 4-13.
*Chan # > Calibration >*
Submenu

**Table 4-3.** *Chan # > Calibration >* **Submenu**

| Menu Item (Type) | Selections | Function and Operation |
|---|---|---|
| *AutoCal* (Action) | *Pwr & Stat* ➪ START | *Initiates the automatic calibration routine*<br><br>You should initiate *AutoCal:*<br><br>a. Each time you change sensors. Allow 15 minutes for the sensor to stabilize before initiating *AutoCal*.<br><br>b. When the "CH # needs Autocal" message appears in the Priority Message area of the display.<br><br>c. When a temperature drift warning appears in the Priority Message area. The Model 4400A/4500A records the ambient sensor temperature when *AutoCal* is run. If the ambient sensor temperature changes significantly, a temperature drift warning is displayed. The warning message will clear automatically when the temperature returns to the measured range.<br><br>The *AutoCal* routine takes approximately 1-1/2 minutes to zero and calibrate both the High and Low video bandwidths. While these activities are in progress, the display reports the *AutoCal* status on the Message Line. When the process is finished, "Autocal Complete" is displayed. |

**Table 4-3.** *Chan # > Calibration >* **Submenu** *(continued)*

| Menu Item (Type) | Selections | Function and Operation |
|---|---|---|
| **Note** | | The *Chan # > Calibration > Start* selection will only be highlighted when an *AutoCal* can be selected. *AutoCal* is not available if the channel is off or a sensor is not connected.<br><br>If the SRQ annunciator illuminates at the end of the *AutoCal* procedure, proceed as instructed in **Subsection 5.4 SRQ Operation**. If an error message appears on the display during the *Autocal* procedure, refer to **Appendix A Error Messages.**<br><br>Pressing the ESC key will halt the *Autocal* process. |
| *Fixed Cal* (Action) | *Pwr & Stat* ➪ START | *Sets the sensor 0 dBm point precisely using an external standard.*<br><br>The Model 4400A/4500A allows the operator to perform a 0 dBm fixed calibration using a customer-provided source. The *Chan # > Calibration > Fixed Cal Start* selection will only be highlighted when *Fixed Cal* can be activated. To activate *Fixed Cal* the channel must be turned on, have a sensor connected, and have completed a valid *AutoCal.*<br><br>The correction range of the sensor 0 dBm point by the *Fixed Cal* procedure is limited to ± 1 dB. |
| *Zeroing* (Action) | *Pwr & Stat* ➪ START | *Initiates the automatic internal zero adjustment routine for CW measurements*<br><br>The instrument will automatically adjust its indication of the zero input power level.<br><br>Disable any signal source connected to the sensor before initiating the *Zeroing* procedure. If the sensor is connected to the internal calibrator, the calibrator output signal will be turned off automatcially when *Zeroing* is initiated and will resume when zeroing is complete.<br><br>Initiate *Zeroing* by pressing the *Chan # > Calibration > Zeroing* menu key. During the *Zeroing* process, the message line will read “Zeroing CW Channel #.” When complete, the message line reads “Zeroing CW Complete.” Reactivate any external signal applied to the sensor. |
| **Note** | | If the SRQ annunciator illuminates at the end of the *Zeroing* procedure, proceed as instructed in **Subsection 5.4 SRQ Operation**.<br><br>Pressing the ESC key will halt the *Zeroing* process. |

Figure 4-14.
*Chan # > Extensions >*
Submenu

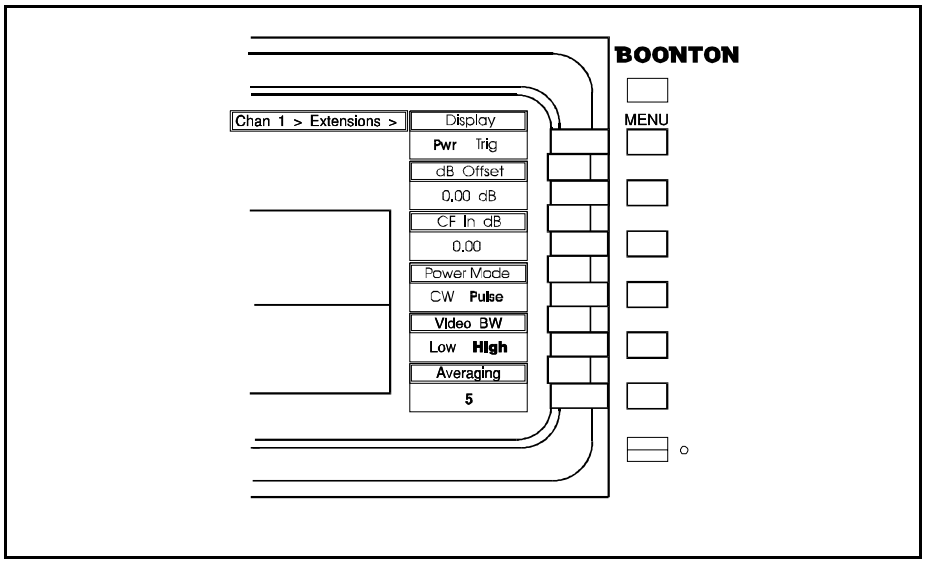


**Table 4-4.** *Chan # > Extensions >* **Submenu**

| Menu Item (Type) | Selections | Function and Operation |
|---|---|---|
| *Display* (Toggle) | *Pwr* ➪ **Pwr**, Trig | *Selects either a measurement channel or a trigger input for the waveform display*<br><br>Press *Chan # > Extensions > Pwr* to display the waveform on the measurement channel. *Press Chan # > Extensions > Trig* to display the trigger input waveform.<br><br>The trigger waveform display is useful for evaluating the trigger signal characteristics and for making time measurements involving the trigger and power channels. For instruments equipped with the optional second channel, it is recommended that you connect the trigger signal to the channel that is not measuring the RF signal. For single channel instruments, store the trigger in a reference channel. |
| *dB Offset* (Numeric) | *Pwr & Stat* ➪ Continuous Range: (-99.99 to +99.99 dB) | *Inputs the value of the offset attenuator*<br><br>This function is used to account for attenuator(s) or amplifier(s) inserted at the instrument's input to adjust high or low signal levels to the input range of the instrument.<br><br>The value for offset correction factor is always entered in dB but is still applied to the signal in the linear mode.<br><br>The offset entered in this function will be reflected in the trigger level value. |

**Table 4-4.** *Chan # > Extensions >* **Submenu** *(continued)*

| Menu Item (Type ) | Selections | Function and Operation |
|---|---|---|
| | | To display the unattenuated signal power, press the "dB Offset" menu key and use any of the data entry controls to input the known value of the offset attenuator.<br><br>If necessary, determine the exact value of the attenuator by connecting the sensor with the attenuator to the calibrator output and following these steps:<br><br>1. Use *Spec > Calibrator > Cal Mode* to select "CW." See Subsection 4-16.<br><br>2. Set the calibrator output to +20 dBm using the *Spec > Calibrator > Set Level* menu key and the keypad.<br><br>3. Select *Chan > Extensions > dB Offset* and use the spin knob to adjust the *dB Offset* parameter to the value (approximately 20 dB) until the power readout at the active time marker reads 20.00 dBm.<br><br>The exact value of the attenuator is indicated by the *dB Offset* parameter. |
| *CF in dB* (Numeric) | *Pwr & Stat* ➪ Continuous Range: (-3 to +3 dB) | *Compensates for any differences between the* Autocal *circuit and the measurement circuit*<br><br>To preserve measurement accuracy, it is necessary to account for circuit losses in the *AutoCal* path that do not appear in the measurement circuit path and *vice versa*.<br><br>The value for correction factor offset is always entered in dB but is still applied to the signal in the linear mode.<br><br>The offset entered in this function will be reflected in the trigger level value.<br><br>During the *AutoCal* process, the instrument creates a table in memory that correlates the calibrator output power levels to the corresponding sensor output voltage. When the sensor is connected directly to the calibrator output during *AutoCal*, this table is precise. However, if the sensor is connected to the calibrator indirectly through lossy circuit elements (cables, adapters, switches, etc.), the loss in these elements is a potential source of measurement inaccuracy.<br><br>However, if the same circuit losses occur in the measurement path between the sensor and the device under test, the potential error is cancelled. Thus, it is necessary to determine the *difference* in circuit loss in the calibrator path and the measurement path. See Figure 4-15.<br><br>To compensate for path loss differences, press the "CF in dB" menu key and use any of the data entry controls to input the circuit loss difference in dB. |

**Table 4-4.** *Chan # > Extensions >* **Submenu** *(continued)*

| Menu Item (Type ) | Selections | Function and Operation |
|---|---|---|
| *Video Bandwidth* (Toggle) | *Pwr & Stat* ➪ Low, **High** | *Selects either the narrowband or wideband detector response*<br><br>Press *Chan # > Extensions > Video BW > Low* to select a narrowband sensor detector response that is useful for displaying noisy, low frequency signals or to reduce carrier feed through.<br><br>Press *Chan # > Extensions > Video BW > High* to select a wideband response that is useful for measuring short pulses. The actual detector bandwidths vary with the sensor selected. Note that High Bandwidth is not available if CW Measurement mode is selected. |
| *Averaging* (Numeric) | *Pwr* ➪ Continuous Range (1 to 10000) | *Selects the number of samples that are averaged at each point*<br><br>Press *Chan # > Extensions > Averaging* to activate this function. Use any of the data entry controls to select the number of samples to be averaged at each point of the waveform to produce the waveform display. |

Figure 4-15. Illustration of Measurement (L1) and Calibration (L2) Paths

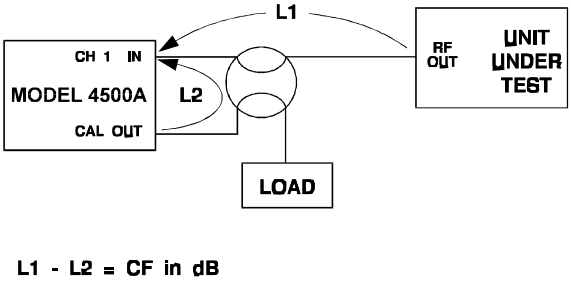

## Channel Math

The Channel Math function enables you to display a plot of the sum or difference of two waveforms. See Figure 4-17. Plotting difference waveforms is useful for comparing the change in a signal as it passes through a circuit element, such as an amplifier or filter. For two-channel instruments, connect the Channel 1 sensor at the input to the device (through a coupler) and connect the Channel 2 sensor at the output.

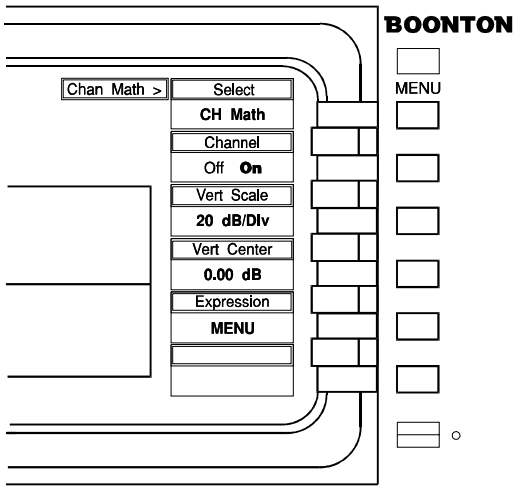


Figure 4-16. *Chan Math >* Menu

**Table 4-5.** *Chan Math>* **Menu**

| Menu Item (Type ) | Selections | Function and Operation |
|---|---|---|
| *Select* | *Pwr & Stat* ⇨ See Table 4-2 | Identical to *Chan #* > menu. See Table 4-2. |
| *Channel* | *Pwr & Stat* ⇨ See Table 4-2 | Identical to *Chan #* > menu. See Table 4-2 |
| *Vert Scale* | *Pwr & Stat* ⇨ See Table 4-2 | Identical to *Chan #* > menu. See Table 4-2 |
| *Vert Center* | *Pwr & Stat* ⇨ See Table 4-2 | Identical to *Chan #* > menu. See Table 4-2 |
| *Expression* | *Pwr & Stat* ⇨ MENU | Accesses the *Chan Math* > *Expression* > submenu.<br>Use the *Chan Math* > *Expression* > submenu to generate and display the sum or difference of two waveforms. See Table 4-6. |

**Table 4-6.** *Chan Math > Expression >* **Submenu**

| Menu Item (Type ) | Selections | Function |
|---|---|---|
| *Argument A* (Toggle) | *Pwr & Stat* ➪ CH1, CH2 REF1, REF2 | *Selects the first item in the Channel Math expression*<br><br>Press the *Chan Math > Expression > Argument A* menu key to select either “CH 1”, “CH 2”, "Ref 1" or "Ref 2". Select an operator (“+” or “-”) and a second argument (see below) to complete the mathematical expression that represents the calculated waveform you wish to display. Any combination of Channel 1 and Channel 2 waveforms can be selected as the arguments of the sum or difference expression. |
| *Operator* (Toggle) | *Pwr* ➪ Log +, - Linear *, / | *Selects the operator for the mathematical expression*<br><br>The "+" and "-" in the log mode is equivalent to "*" and "/" in the linear mode.<br><br>Press the *Chan Math > Expressions > Operator* menu key to select either the plus or minus sign to indicate whether the designated waveforms are to be added, or whether one is to be subtracted from the other. All addition and subtraction operations are logarithmic, producing either the product or ratio of the signal waveforms. |
| | *Stat* ➪ Log +, - Linear *, / | *Selects the operator for the mathematical expression*<br><br>Press the *Chan Math > Expressions > Operator* menu key to select either the plus or minus sign to indicate whether the designated waveforms are to be added, or whether one is to be subtracted from the other. All addition and subtraction operations are logarithmic, producing either the product or ratio of the signal waveforms. |
| *Argument B* (Toggle) | *Pwr & Stat* ➪ CH1, CH2 REF1, REF2 | *Selects the second item in the Channel Math expression*<br><br>Press the *Chan Math > Expressions > Argument B* menu key to select either “CH 1” or “CH 2.” |

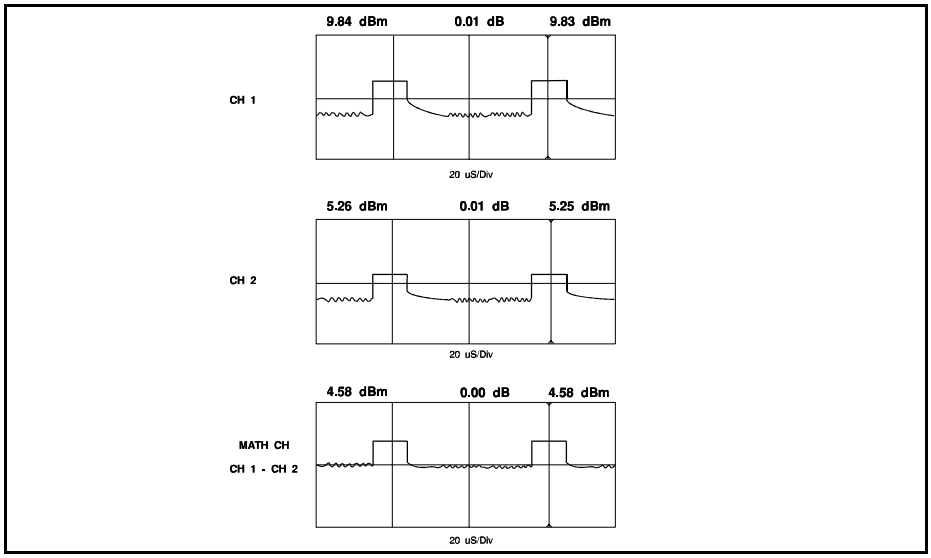


Figure 4-17.
Generating a Difference Waveform Using Channel Math

**Reference Traces**

Select *Chan Ref #* > *Select Ref #* to store a signal trace in non-volatile RAM for later reference. This feature is useful for comparing signals at the input and output of an RF device, such as an amplifier, filter, or equalizer. Either “Ref 1” or “Ref 2” may be assigned arbitrarily to record the waveform on Channel 1, Channel 2, or Channel Math.

Reference waveforms can be saved in different formats. These are pulse, CDF, 1-CDF and PDF. Reference waveforms in a format which does not match the instrument’s current mode cannot be displayed or used in math channel operations. CW waveforms are stored using pulse format.

Before using the “Ref 1” or “Ref 2” functions, set up the display of the measurement channel display, as discussed in Table 4-2. Afterward, it is recommended (although not mandatory) that you select the split-screen display and assign the measurement channel and reference trace(s) to the top and bottom windows, respectively.

Procedures for establishing a split-screen display and assigning the traces to windows are listed in Subsection 4-18. The split-screen display enables you to view the channel and reference traces independently. Alternatively, you may superimpose the measurement channel and reference traces in a full-screen display for comparison.

**Note**

When in the *Stat* ⇨ mode, PDF the split screen display is not available.

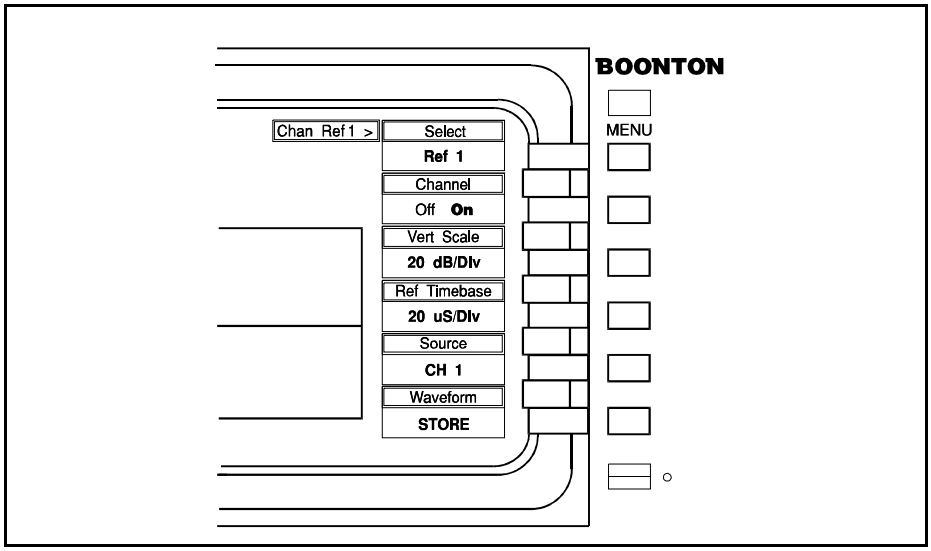


Figure 4-18.
*Chan Ref #* > Menu

**Table 4-7.** *Chan Ref # >* **Menu**

| Menu Item (Type) | Selections | Function |
|---|---|---|
| *Select* | *Pwr & Stat* ➪ | Identical to *Chan # >* Menu. See Table 4-2.<br><br>Select either “Ref 1” or “Ref 2.” |
| *Channel* (Toggle) | *Pwr & Stat* ➪<br>Off, On | *Turns the display of the current reference waveform off or on.*<br><br>Remove the reference waveform from the waveform display window by pressing the *Chan Ref # > Channel* menu key. Press it again to restore the display. |
| *Vert Scale* (Numeric) | *Pwr & Stat* ➪<br>Log Mode:<br>0.1 to 20 dB/Div<br>Lin Mode:<br>1 nW to 50 MW/Div | The reference mode is saved in full vertical resolution in a floating point array. This allows the vertical scale of reference channel waveforms to be changed any time after being saved to memory or recalled from disk. The reference channel will switch between the log and linear modes with the "Units" command in the *Display* menu. |
| *Vert Center* (Numeric) | *Pwr & Stat* ➪<br>Log Mode:<br>-99.99 to 99.99 dB | The reference mode is saved in full vertical resolution in a floating point array. This allows the vertical center or offset of reference channel waveforms to be changed any time after being saved to memory or recalled from disk. |
| *Vert Offset* (Numeric) | *Pwr & Stat* ➪<br>*Lin Mode*<br>0 to 99 Divs: | See above function description. |
| *Waveform* (Action) | *Pwr & Stat* ➪<br>REPORT | *Displays a report that describes the instrument setup for the reference channel stored in reference 1 memory.*<br><br>This is a similar report to the one used in waveform recall from disk. This report includes the instrument serial number, sensor serial number, channel, dB Offset, dB Correction Factor, video bandwidth, averaging, display, frequency, timebase, position, trigger delay, trigger mode, trigger source, trigger level, trigger holdoff, and trigger slope. |

## 4.10 TIME Key and *Time* > Menu

The TIME key activates the *Time* > menu (Figure 4-19). When in the *Pwr* ⇨ mode this enables you to specify the timebase and horizontal position of the waveform display. When in the *Stat* ⇨ mode the time menu enables you to specify the x-axis scale in percent and the percent offset. Table 4-8 describes the functions that appear in the *Time* > menu.

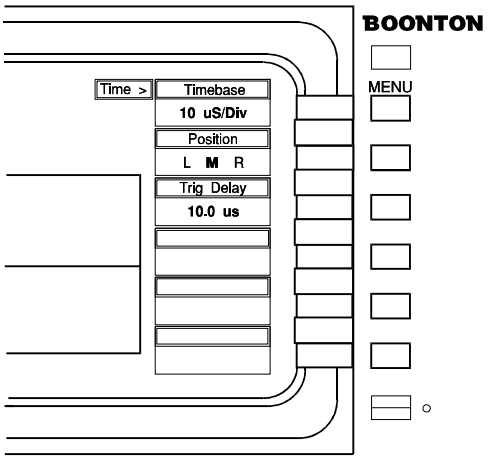


Figure 4-19. *Time* > Menu

**Table 4-8.** *Time* > **Menu**

| Menu Item (Type) | Selections | Function |
|---|---|---|
| *Timebase* (Numeric) | *Pwr* ⇨ Discrete Range: 10 ns/Div to 1 s/Div | *Sets the horizontal resolution for data capture*<br><br>Press the *Time* > *Timebase* menu key if it is not already activated. Adjust the timebase using any of the data entry controls. When selecting the timebase locally, using the keypad, or remotely, over the IEEE 488 bus, any entry between valid timebase values will be rounded up to the next valid timebase.<br><br>The horizontal (time) axis is subdivided into ten divisions of fifty data points (pixels) each. The timebase you select determines the resolution of the trigger delay function (see below) and the positioning of the time markers (See Subsection 4-12). The timebase selection also determines the accuracy of all time measurements.<br><br>In the timebase range from 10 ns to 50 µs, the signal sampling rate is 1 MHz; from 100 µs to 1 sec, the sampling rate is 500 kHz. For the data collected on timebases 10 ns to 100 µs, every sample is processed and displayed. In the range from 200 µs to 5 ms, redundant time samples are discarded. For the range from 10 ms to 1 sec, redundant time samples are averaged, or peak detected, depending upon the setting of > *SPCL* > *Peaking Mode*. |

**Table 4-8.** *Time* > **Menu** *(continued)*

| Menu Item (Type ) | Selections | Function |
|---|---|---|
| *Position* (Multiple Choice) | *Pwr* ➪ L, M, R | *Positions the trigger within the waveform display window.*<br><br>Press the *Time* > *Position* menu key to shift the start of the waveform display to the left edge (“L”), middle (“M”) or right edge (“R”) of the display area.<br><br>Use this function when you wish to view a specific segment of the waveform. Select “L” to observe the waveform immediately *after* the trigger occurs; “R” to observe the waveform immediately *before*; and “M” to observe segments of the waveform just *before and after* the trigger. |
| *Trig Delay* (Numeric) | *Pwr* ➪ Continuous Range: (See discussion) | *Sets the amount of delay between the trigger and the start of sweep.*<br><br>The trigger delay is a time offset from the trigger event to the point at which the waveform data is captured.<br><br>The Model 4400A/4500A automatically adjusts the limits of the *Time* > *Trig Delay* parameter range not to exceed the limits established by the *Time* > *Timebase* selection. These limits are listed in the the instrument’s specifications, Table 1-2. |
| *X-Axis* (Numeric) | *Stat* ➪ Discrete Range: 0.1% / Div to 10% / Div | *Sets horizontal axis scale.*<br><br>In the *Stat* ➪ mode the horizontal axis is always in percent. It is scalable over the range of 0.1 to 10 percent per division. This allows the operator to zoom in and out on the statistical waveforms. The Model 4500A does not allow the operator to enter a combination of X-axis and % Offset which is invalid. The instrument will automatically adjust the % Offset to a valid value when the X-axis is adjusted. An invalid combination is one that would have the minimum (left) edge of the graph at less than 0% or the maximum (right) edge of the graph greater than 100%. |
| *% Offset* (Numeric) | *Stat* ➪ Continuous Range: 0 to 99% | *Allows the operator to offset the left edge of the statistical waveform display away from 0%.*<br><br>The upper limit for entry of this function is variable and depends on the X-axis setting. The % Offset can not create an invalid display. An invalid display is one where the right edge of the display exceeds 100%. For example, when the X-axis is at 10% per division, the percent offset can only be zero. |

## 4.11 TRIG Key and *Trig* > Menu

The TRIG key activates the *Trig* > menu (Figure 4-20), which enables you to specify the trigger parameters. Table 4-9 describes the functions that appear in the *Trig* > menu. This menu does not contain any active menu selections in the *Stat* ⇨ mode. In that mode one menu is labeled trigger mode continuous and provides no options. This is simply a reminder that the instrument continuously samples in this mode.

When in the *Pwr* ⇨ Auto Trigger mode, the instrument expects that a valid trigger event will occur at regular intervals or the instrument will time-out and generate its own trigger event. The autotrigger delay time table (Table 4-10) shows the typical time-out period for each timebase.

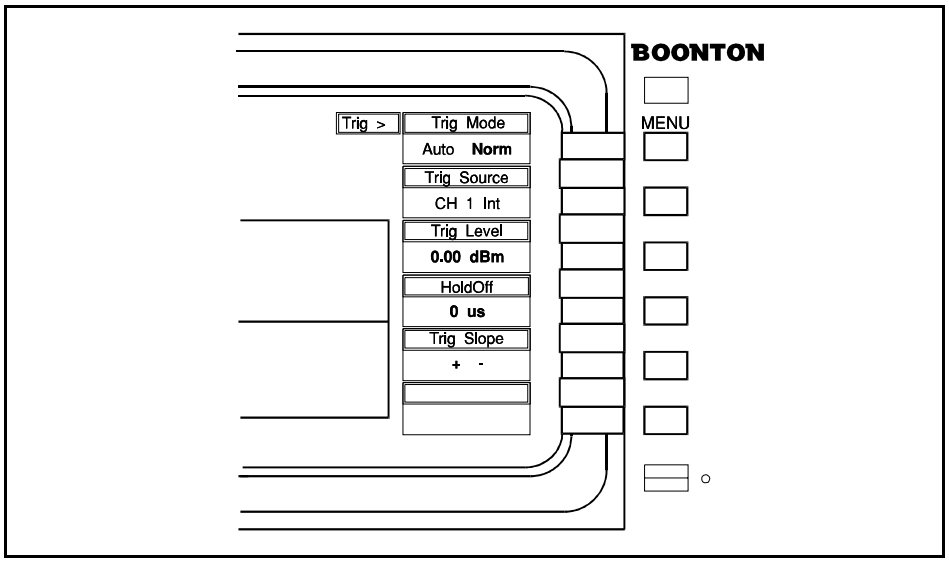


Figure 4-20. *Trig* > Menu

**Table 4-9.** *Trig* > **Menu**

| Menu Item (Type) | Selections | Function |
|---|---|---|
| *Trig Mode* (Toggle) | *Pwr* ⇨ **Auto**, Norm | *Selects normal or automatic triggering*<br><br>Press the *Trig* > *Trig Mode* menu key to toggle between “Auto” and “Norm(al).”<br><br>In the Normal mode, the data capture is triggered when the internal or external trigger signal reaches the trigger level. If no valid trigger level is reached, the waveform data will not change.<br><br>In Auto mode, if there is no valid trigger event, the measurement occurs automatically after a prespecified timeout. The timeout period varies depending on the timebase (see Table 4-10).<br><br>If the signal is turned off in the Auto trigger mode, the waveform will decay slowly to the noise level.<br><br>The Auto mode is useful for measuring unmodulated (CW) carriers. |

## Table 4-9. *Trig* > Menu *(continued)*

| Menu Item (Type ) | Selections | Function |
|---|---|---|
| *Trig Source* (Mult. Choice) | *Pwr* ➪ CH1 Int, CH1 Ext, CH2 Int, CH2 Ext | *Selects internal or external triggering for Channel 1 or 2.*<br><br>Only one trigger source is needed to capture data on a single or dual-channel instrument.<br><br>The trigger source can be Channel 1 internal or external. For dual-channel instruments, Channel 2 internal or external can also provide the trigger.<br><br>Specifications for the trigger source are provided in Section 1.6, Table 1-2. Internal triggering occurs when the signal in the measurement channel crosses the specified trigger level in the direction (positive-going or negative-going) indicated by the slope selection. External triggering occurs when the signal applied at the Trigger 1 or 2 ports reaches the trigger level on the selected slope of the waveform. The selected triggering source is always active and will generate triggers even if the source channel is turned off.<br><br>The choice of internal or external triggering will depend generally on the characteristics of the measured signal. External triggering can help stabilize the display of noisy signals, and is preferred if an external sync pulse is available.<br><br>Select internal triggering by pressing the *Trig* > *Trig Source* menu key to produce “CH # Int” in the selection box. To use external triggering, connect the external trigger signal to the appropriate Trigger # input. Press the *Trig* > *Trig Source* key until “CH # Ext” appears in the selection box.<br><br>For instruments not equipped with optional Channel 2, the choices in the *Trig* > *Trig Source* window will be limited to “CH 1 Int” and “CH 1 Ext.” |
| *Trig Level* (Numeric) | *Pwr* ➪ Continuous Range: | *Sets the threshold level for the trigger signal.*<br><br>Press *Trig* > *Trig Level* to highlight this selection and use any of the data entry controls to adjust the trigger level for the desired trigger source. (Trigger level settings are set independently for each of the four trigger sources.)<br><br>The specified range of the internal trigger covers the upper 25 dB of the sensor power range. Typically, however, triggering depends on the noise level in the measurement channel.<br><br>The trigger range is automatically adjusted to include the *dB Offset* and *CF in dB* parameters selected in the *Chan #* > *Extensions* menu. For example, if the trigger level = 10 dBm, the *dB Offset* = 20 dBm, and the *CF in dB* = 0.5 db, the trigger display will indicate a trigger *level* of 30.5 dBm. The trigger *range* is shifted upward by 20.5 dB to cover -9.5 to + 40.5 dBm. |

**Table 4-9.** *Trig* > **Menu** *(continued)*

| Menu Item (Type ) | Selections | Function |
|---|---|---|
| *Holdoff* (Numeric) | *Pwr* ➪ Continuous Range: (0 to 60,000 µs) | *Prevents false triggering when measuring complex digital waveforms.*<br><br>The *Trig* > *HoldOff* function is used to stabilize the display of complex signals when the triggering signal has multiple pulses within a triggering period.<br><br>Measuring framed communication signals is a good example of an application of the *Trig* > *HoldOff* function. These signals are characterized by repetitive frames of random data bursts. Each frame is marked by a framing pattern of several bits. To achieve a stable display with the Model 4400A/4500A, it would be necessary to trigger the data capture with the framing pattern. However, without an external trigger, the instrument would trigger repeatedly on the data pulses, as well as on the framing pattern, resulting in an unstable display.<br><br>To solve this problem, the *Trig* > *HoldOff* function allows you to specify a time period during which triggering is inhibited. By specifying the *Trig* > *HoldOff* period to be slightly less than the frame interval, the instrument can be made to “lock on” to the framing pattern and present a stable display.<br><br>The minimum *HoldOff* value is 0.7 µs, the minimum interval after a trigger event before the next trigger can occur. Entering “0” as the HoldOff parameter disables the HoldOff function. |
| *Trig Slope* (Toggle) | *Pwr* ➪ +, - | *Causes the trigger to occur on the rising or falling edge of the trigger pulse.*<br><br>Press the *Trig* > *Trig Slope* menu key to select the desired triggering slope. |
| *Trig Mode* | *Stat* ➪ Continuous | This function has no options. It is a reminder that the instrument does not need trigger configuration. |

| Table 4-10. Autotrigger Delay Times | | | |
|---|---|---|---|
| **Time/Division** | **Delay Time** | **Samp/Trig** | **Rdgs/Samp** |
| 1 sec | 10.4 sec | 500 | 10000 |
| 500 msec | 5.2 sec | 500 | 5000 |
| 200 msec | 2.16 sec | .500 | 2000 |
| 100 msec | 500 msec | 500 | 1000 |
| 50 msec | 616 msec | 500 | 500 |
| 20 msec | 308 msec | 500 | 200 |
| 10 msec | 204 msec | 500 | 100 |
| 5 msec | 76 msec | 500 | 1 of 50 |
| 2 msec | 62 msec | 500 | 1 of 20 |
| 1 msec | 61 msec | 500 | 1 of 10 |
| 500 µsec | 69 msec | 500 | 1 of 5 |
| 200 µsec | 149 msec | 500 | 1 of 2 |
| 100 µsec | 51 msec | 500 | 1 |
| 50 µsec | 83 msec | 500 | 1 |
| 20 µsec | 81 msec | 200 | 1 |
| 10 µsec | 80 msec | 100 | 1 |
| 5 µsec | 80 msec | 50 | 1 |
| 2 µsec | 79 msec | 20 | 1 |
| 1 µsec | 79 msec | 10 | 1 |
| 500 nsec | 79 msec | 5 | 1 |
| 200 nsec | 79 msec | 2 | 1 |
| 100 nsec | 79 msec | 1 | 1 |
| 50 nsec | 79 msec | 0.5 | 1 |
| 20 nsec | 79 msec | 0.2 | 1 |
| 10 nsec | 79 msec | 0.1 | 1 |

## 4.12 MARK key and *Mark* > Menu

The MARK function key activates the *Mark* > menu (Figure 4-21) which enables you to position the time marks, and make power and time interval measurements. Table 4-11 explains the operation of each item in the *Mark* > menu. Figure 4-22 and Table 4-12 describe the items in the *Mark* > *Extensions* > submenu.

In the *Pwr* ➪ mode two vertical markers (time marks) help you make precise power and time interval measurements. In the split-screen mode, two independent markers are available in the top and bottom waveform display windows. The signal level at Time Mark 1 appears above the left-hand side of the display window; the level at Time Mark 2 is to the right. The center position above the display window is user-assigned to indicate either the ratio of the two marker power measurements or the average power of the waveform between the markers (see Table 4-12).

In the *Stat* ⇨ mode the markers are positioned in percent and return the power levels. The markers do not function in the probability density function (PDF) mode.

Each marker field is color-coded to match the waveform the marker is assigned to measure. When each marker is assigned to a different channel, the power ratio readout is assigned the marker color.

The data field above the center of the waveform display is operator-designated. You can choose to display either the ratio of the power levels at Time Marks 1 and 2, expressed in dB (or %), or the average power in the waveform segment between the markers. Instructions for making this selection are provided in Table 4-12.

One marker is designated the *active* marker for control purposes, and is recognizable by the small triangles at top and bottom. To change the active marker, press the *Mark* > *Marker #* menu key corresponding to the marker you wish to activate. In split-screen mode, only the active window has an active time mark.

The markers read the power at the instant specified by their location on the waveform. Power readings are not affected by the setting of the vertical scale or vertical center offset parameters (see Subsection 4.9), nor must waveform data points appear on screen to be measured. When there are no valid data to be measured at a marker, the corresponding display field will show a series of dashes (--.--). The symbol (^^^.^^) indicates an overrange condition; the symbol (___.__) indicates an underrange condition.

**Procedure**

To make time interval measurements, position Time Marks 1 and 2 at the beginning and end of the interval you wish to measure. The time interval measurement appears in the *Mark* > *Delta Time* window. The resolution of time interval measurements depends on the timebase selection (see Subsection 4.10).

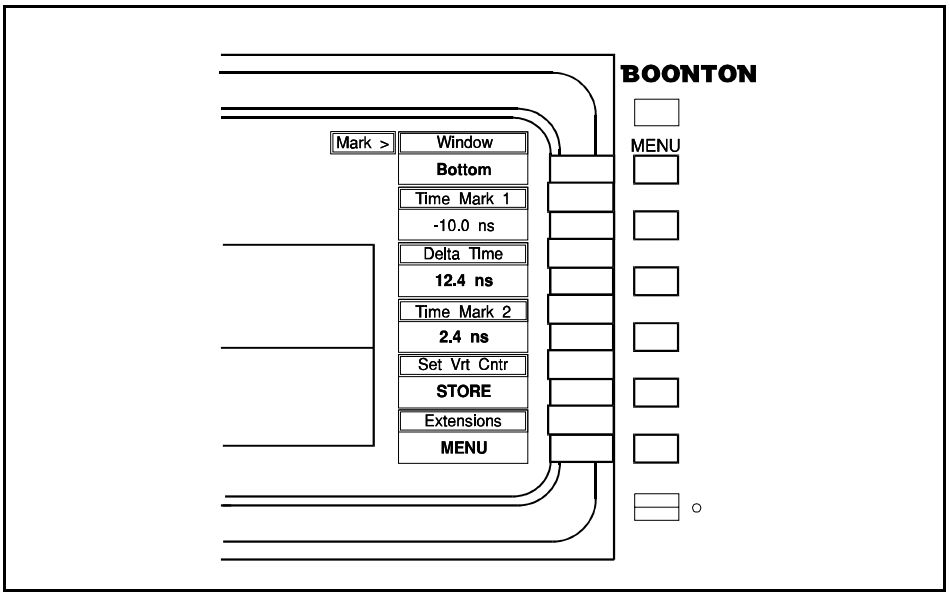


Figure 4-21.
*Mark* > Menu

## Table 4-11. *Mark* > Menu

| Menu Item (Type ) | Selections | Function |
|---|---|---|
| *Window* (Toggle) | *Pwr & Stat* ➪ Top, **Bottom** | *Designates which set of time marks (top or bottom) will be controlled (applicable in split-screen mode).*<br><br>When the instrument is in the split-screen mode, you may use two time marks in each window to designate points on the waveform display. Use the data entry controls to position the time marks, after you select which set of marks (those in the top or bottom window) you wish to position. Indicate your choice by pressing the *Mark* > *Window* menu key to select either "Top" or "Bottom."<br><br>In the full-screen mode, the *Mark* > *Window* menu key is inactive and always displays "Bottom". |
| *Mark #* (Numeric) | *Pwr* ➪ Continuous Range: Left and Right boundaries of the display.) | *Controls the position of Time Mark #.*<br><br>Press the *Mark* > *Time Mark #* menu key to activate this function.<br><br>Use any of the data entry controls to position the time marker anywhere within the left and right boundaries of the waveform display. The marker position is expressed as the time offset relative to the trigger event. |
| | *Stat* ➪ Continuous Range: Left and Right boundaries of the display.) | *Controls the position of Percent Mark #.*<br><br>Press the *Mark* > *Percent Mark #* menu key to activate this function.<br><br>Use any of the data entry controls to position the percent marker anywhere within the left and right boundaries of the waveform display. The marker position is expressed as the percent of total occurrence. |
| *Delta Time* (None) | *Pwr* ➪ None | *Displays the time difference between Time Marks 1 and 2*<br><br>The value that appears in this window is automatically calculated by the instrument, and represents the time interval between Time Marker 1 and 2. |
| | *Stat* ➪ None | *Displays the percent difference between Percent Marks 1 and 2*<br><br>The value that appears in this window is automatically calculated by the Model 4500, and represents the percent difference between Marker 1 and 2. |
| *Set Vrt Cntr* (Action) | *Pwr & Stat* ➪ CENTER | *Shifts the waveform display vertically to position it according to the location of the active time mark.*<br><br>When the *Mark* > *Set Vrt Cntr* > *CENTER* menu key is pressed, the *Chan #* > *Vert Center* parameter is modified to reposition the waveform vertically. The waveform is shifted so that the horizontal centerline (reference level) of the display coincides with the level at which the currently active marker crosses the waveform. If the markers are in the min/max mode, then the waveform will be shifted so the minimum or maximum power (depending upon which marker is active) appears at the center of the screen.<br>Use the active marker to designate the point on the waveform that you wish to place on the reference level and press the *Mark* > *Set Vrt Cntr* menu key. |

Figure 4-22. *Mark > Extensions >* Menu

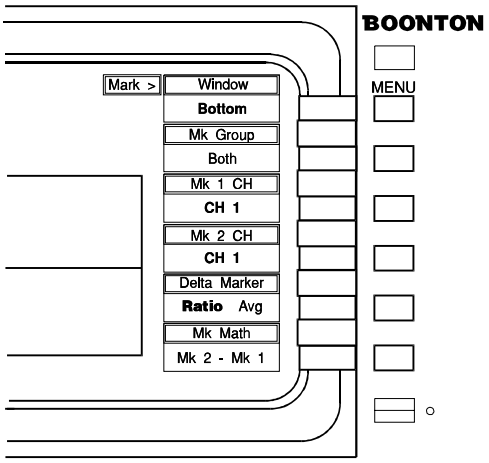


**Table 4-12.** *Mark > Extensions >* **Submenu**

| Menu Item (Type ) | Selections | Function |
|---|---|---|
| *Window* (Toggle) | *Pwr & Stat* ➪ Top, **Bottom** | *Designates which set of time marks (top or bottom) will be controlled (applicable in split-screen mode).*<br><br>When the Model 4400A/4500A is in the split-screen mode, you may use two time marks in each window to designate points on the waveform display. Use the data entry controls to position the time marks, after you select which set of marks (those in the top or bottom window) you wish to position. Indicate your choice by pressing the *Mark > Window* menu key to select either “Top” or “Bottom.”<br><br>In the full-screen mode, the *Mark > Window* menu key is inactive and always displays “Bottom”. |
| *Mk Group* (Toggle) | *Pwr & Stat* ➪ **Both**, Each | *Selects the marker channel assignment mode.*<br><br>When “Both” has been selected, both markers are assigned to the same channel. Changing either marker channel assignment changes both assignments. Also, selecting “Both” activates two choices in the *Mark > Extensions > Delta Marker >* menu, “Ratio” and “Average.”<br><br>When “Each” has been selected, the markers can be assigned individually; that is, *Mark > Extensions > Mk 1 CH* and *Mark > Extensions > Mk 2 CH* can be assigned to different channels. The marker channel assignments for the “Both” and “Each” selections are independent and are saved separately. |

**Table 4-12.** *Mark > Extensions >* **Submenu** *(continued)*

| Menu Item (Type ) | Selections | Function |
|---|---|---|
| *Mk 1 CH, Mk2, CH* (Multi Choice) | *Pwr* ➪<br>**CH1,** CH2,<br>CH Math,<br>Ref 1, Ref 2<br><br>*Stat* ➪<br>**CH 1,**<br>CH Math,<br>Ref 1, Ref 2 | *Selects the measurement channel for the indicated marker.*<br>The Time Mark # assignment for each of the two group assignments (“Both” and “Each”) are independent of each other. When *Mark > Mk Group Both* has been selected, both Marker 1 and Marker 2 are assigned to the same channel. Changing either entry changes both. When *Mark > Mk Group Each* has been selected, the marker assignments are recalled from the last selections made in the *Mark > Mk Group Each* mode. Each of the markers can be assigned to separate measurement channels. Each marker can be assigned to the reference channels also. All marker functions will function on the reference channels including minimum and maximum power measurements between markers and average power between markers. |
| *Delta Marker* (Multi Choice) | *Pwr* ➪<br>**Ratio**<br>Avg., Delta (Lin)<br><br>*Stat* ➪<br>**Ratio** | *Selects the functionality of the center marker window above the waveform display; can either display ratio or average power between markers. In Stat ➪ mode the ratio option is automatically selected.*<br>Place the time marks in the active window at the points of interest on the waveform. Press the *Mark > Delta Marker* menu key to select either “Ratio”, “Avg.” , or "Delta". (Linear mode only).<br>The "Ratio" description applies to the *Pwr & Stat* ➪ modes of operation.<br>Selecting “Ratio” causes the center marker window to display the power ratio (the difference in dB) of Marker 1 and 2. Assign the markers using the MK Math function.<br>This ratio can be expressed in dB or %. If the individual power levels at Marker 1 and 2 are expressed in dBm, their ratio will be expressed in dB. If the individual levels are expressed in watts, the ratio will be expressed as the percentage of power.<br>Select “Avg” to display the average power in the waveform segment between the two markers. The average power will be expressed in the same terms as the individual power levels (dBm or watts).<br>The “Avg” selection is available only when *Mark > Extensions > Mk Group Both* is active. When *Mark > Extensions > Mk Group Each* is selected, the *Delta Marker* selection is automatically switched to “Ratio.” When *Mark > Extensions > Mk Group Both* is reselected, the *Delta Marker* selection returns to “Avg.”<br>The "Delta" mode only applies when the instrument is in the linear display mode and the displaying power in watts. When in the log mode it functions the same as "Ratio." The delta mode displays the power difference between the two markers in watts. The MK1-MK2, MK2-MK1, MIN-MAX, MAX-MIN modes for marker math all apply. |
| *MK Math* (Multi Choice) | *Pwr* ➪<br>**Mk2 - Mk1**<br>Mk 1 - Mk 2<br>MIN - MAX<br>MAX - MIN<br>PK/AVG | *Selects the expression that governs marker ratio measurement.*<br>Use *Mark > Extensions > Mk Math* to select the sense of the power ratio measurement. This function enables the operator to make gain/loss measurements conveniently and accurately, even in the presence of circuit path delays. |

**Table 4-12.** *Mark > Extensions >***Submenu** *(continued)*

| Menu Item (Type ) | Selections | Function |
|---|---|---|
| | | The MIN - MAX and the MAX - MIN functions allow the user to make minimum and maximum power measurements between markers. This can be used to measure carrier bleed through on the top of the pulse or the limits of power across multiple pulses. This selection has no effect on average power between marker mode, however , when in ratio mode, the ratio of min and max is reported in the delta window.<br><br>The MIN - MAX operation is restricted to marker both mode. When in marker each the operation automatically switches to Mk# - Mk#.<br><br>The PK/AVG mode allows the instrument to measure the long term peak-to-average power ratio for the portion of a periodic waveform that falls between the two markers. The left window displays the long term average power for this portion of the waveform, the center window shows the peak-to-average power ratio, and the right window displays the maximum instantaneous power level that has occurred between the two markers since the instrument was started in this mode. PK/AVG mode functions for any timebase faster than 10ms; it is not available for slower timebases. Also, *Mark > Extensions > Mk Group* is forced BOTH.<br><br>When this mode is selected, the waveform pixel averaging value in the channel menu is used to select the number of sweeps that are used to compute the long term average power level. The pixel averaging (which smooths the displayed waveform) is automatically set to 1 by the instrument so it can accurately capture the correct instantaneous peak power reading rather than averaging out the high points. This will cause the waveform display and automatic pulse measurements to show more noise and appear less stable than usual.<br><br>The MK Math menu is a multiple choice selection which rotates between MK1-MK2, MK2-MK1, MIN-MAX, MAX- MIN, and PK/AVG. |

## 4.13 REF Key and *Ref* > Menu

The **REF** function key activates the *Ref* > menu, which controls the horizontal reference line operation. Figures 4-23 and 4-24 and Tables 4-13 and 4-14 describe the *Ref* > menu and its submenus, as follows:

| Menu or Submenu | Figure | Table |
|---|---|---|
| *Ref* > | 4-23 | 4-13 |
| *Ref* > *Extensions* > | 4-24 | 4-14 |

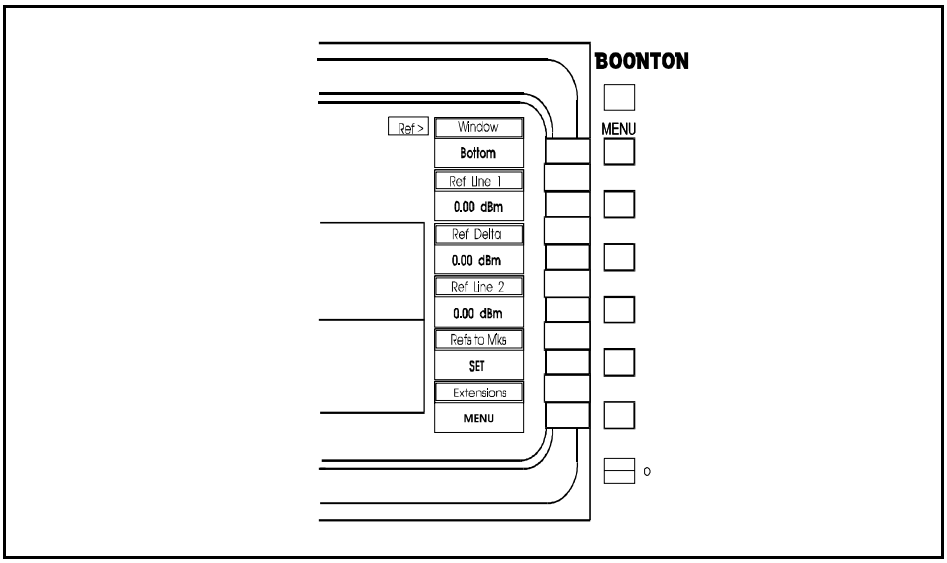


Figure 4-23. *Ref* > Menu

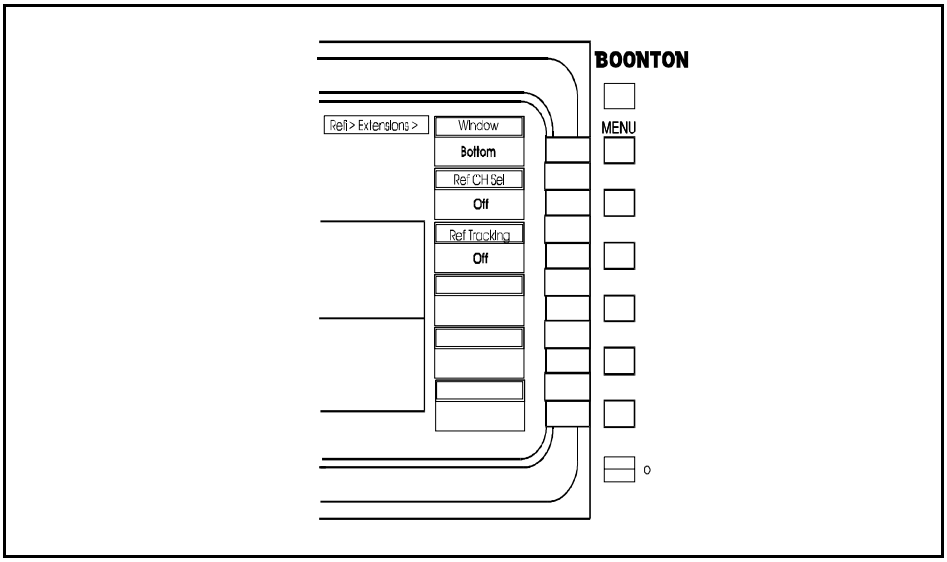


Figure 4-24. *Ref* > *Extensions* > Submenu

## Table 4-13. *Ref* > Menu

| Menu Item (Type ) | Selections | Function |
|---|---|---|
| *Window* (Toggle) | *Pwr & Stat* ➪ Top, **Bottom** | *Designates which set of reference lines (top or bottom) will be controlled (applicable in split-screen mode).*<br><br>When the instrument is in the split-screen mode, you may use two reference lines in each window to designate points on the waveform display. Use the data entry controls to position the reference lines, after you select which set of marks (those in the top or bottom window) you wish to position. Indicate your choice by pressing the *Ref* > *Window* menu key to select either "Top" or "Bottom". |
| *Ref Line 1* (Numeric) | *Pwr & Stat* ➪ Continuous Range | *Controls position of reference line 1.*<br><br>The reference line will indicate the power level that corresponds to its display position based on the reference channel's vertical scale and vertical offset. |
| *Ref Delta* (None) | *Pwr & Stat* ➪ NONE | *Displays the difference between the power levels at reference lines 1 & 2.* |
| *Ref Line 2* (Numeric) | *Pwr & Stat* ➪ Continuous Range | *Controls position of reference line 2.*<br><br>The reference line will indicate the power level that corresponds to its display position based on the reference channel's vertical scale and vertical offset. |
| *Ref to Mks* (Action) | *Pwr & Stat* ➪ Set | *Sets the levels of both of the Ref lines to the levels displayed by the measurement markers MK1 and MK2.*<br><br>Ref 1 is set to MK1 level, Ref2 is set to MK2 level. |

**Table 4-14.** *Ref* > *Extensions* > **Submenu**

| Menu Item (Type ) | Selections | Function |
|---|---|---|
| *Window* (Toggle) | *Pwr & Stat* ➪ Top, **Bottom** | *Designates which set of reference lines (top or bottom) will be controlled (applicable in split-screen mode)*<br><br>When the instrument is in the split-screen mode, you may use two reference lines in each window to designate points on the waveform display. Use the data entry controls to position the reference lines, after you select which set of marks (those in the top or bottom window) you wish to position. Indicate your choice by pressing the *Mark* > *Window* menu key to select either "Top" or "Bottom."<br><br>In the full-screen mode, the *Mark* > *Window* menu key is inactive and always displays "Bottom". |
| *REF CH Sel* (Mult. Choice) | *Pwr* ➪ **Off**, CH1, CH2 CH Math, Ref 1, Ref 2<br><br>*Stat* ➪ Off, CH1, CH Math, Ref 1, Ref 2 | The reference lines can indicate the power level based on the position on the screen. The relationship between the screen position and the level is dependent on the vertical scale and offset of the assigned channel. To make measurement on any specific channel, that channel must be selected, or both channels must have the same vertical scale and vertical center (vertical offset). |
| *Ref Tracking* (Mult. Choice) | *Pwr* ➪ **Off,** Markers Top - Bottom Distal - Mesial Distal - Proximal | The reference line tracking mode allows the instrument to set the level reference markers to the position indicated by the selected source. When set to off the reference lines are set to levels entered in the Ref 1 and Ref 2 menus. The marker selection causes the reference lines to be set to the marker levels. Mk 1 is loaded into Ref 1 and Mk 2 is loaded into Ref 2. The Top - Bottom selection loads the automatic measurement of the Top line amplitude into Ref 1 and the Bottom line amplitude into Ref 2. The Distal - Mesial selection loads the automatic measurement of the distal level into Ref 1 and the Mesial level into Ref 2. The Distal - Proximal selection loads the automatic measurement of the Distal into Ref 1 and the Proximal level into Ref 2. |

## 4.14 MEAS Key and *Meas* > Menu

The MEAS function key activates the *Meas* > menu (Figure 4-25). This menu contains the frequency assignments for each channel, measurement mode selection, pulse definitions for the automatic measurements, and the automatic measurement assignments for the parameter fields.

In the *Meas* > menu three items are dedicated to the frequency assignment for the channel 1 and channel 2 inputs. Frequency entries can be assigned to each channel individually or to both channels at the same time. The entries in the two modes are independent, which allows the instrument to hold three different frequency assignments. The selection of the frequency is determined by the frequency of the signal being applied to the measurement channel. These entries are used to recall frequency related correction data from the sensors connected to that channel. This data is automatically applied to the measurement. The range of allowable frequency entries is determined by the sensor connected to channel. The limits can be viewed under the *Spcl* > *CH 1 Sensor* > *Report*. The frequency correction data can be disabled by entering a zero for frequency (see Table 4-15).

The measurement submode may also be changed from the MEAS > menu. On a 4500A this allows rotating through the three statistical presentation formats without changing from Stat ⇨ mode and resetting the data acquisition.

In the *Pwr* ⇨ mode the instrument makes automatic measurements on pulses. These measurements are based on the IEEE definition of a standard pulse.

The define pulse sub-menu provides a facility for changing the default pulse percentages for the distal, mesial, and proximal points on a waveform. Table 4-17 shows the menu entry options for the *Meas* > *Define Pulse* submenu. The values entered for these points are used to determine the automatic measurement data. For additional information on automatic measurements and how they are made, read **Chapter 6 Applications**.

The Model 4500 is a peak power analyzer, and the percentages are defined in terms of power. When using the 10%, 50%, and 90% of power for measurements, the answers will not be the same if compared with the same percentages in voltage. Table 4-16 lists the relationships between the ratio in dB, percent power and percent voltage. To measure the rise and fall times in terms of voltage, change the proximal to 1%, the mesial to 25% and the distal to 81%.

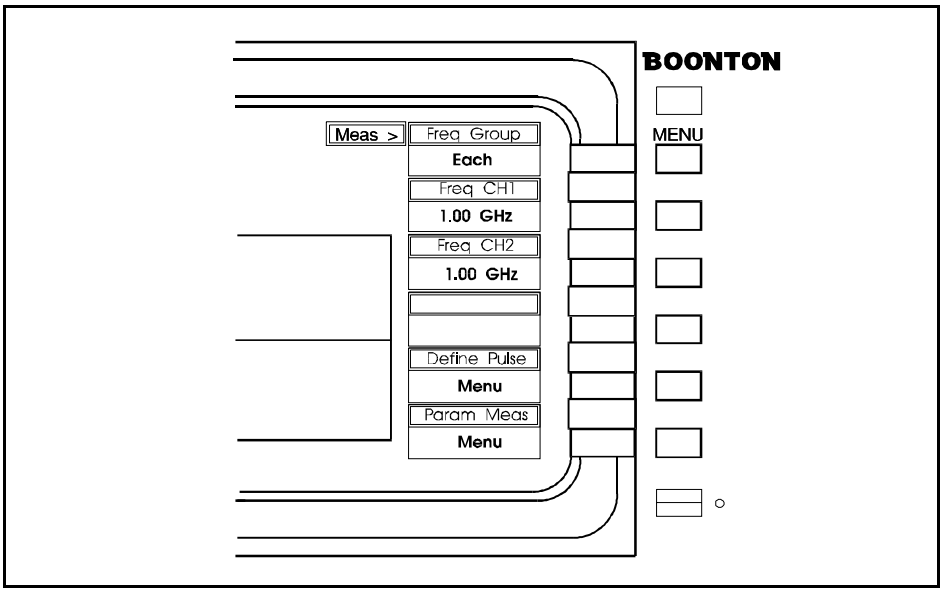


Figure 4-25. *Meas* > Menu

## Table 4-15. *Meas* > Menu

| Menu Item (Type) | Selections | Function |
|---|---|---|
| *Frequency Group* (Toggle) | *Pwr, Stat* ➪ **Both,** Each | *Selects the channel frequency entry mode.*<br><br>The frequency "Both" selection assigns the same frequency to both channels. Changing either CH1 or CH2 frequencies changes both of them. Both windows are updated.<br><br>In the "Each" selection, the frequency for each channel can be individually assigned. |
| *Frequency CH1* (Numeric) | *Pwr & Stat* ➪ Continuous Range: (Sensor Dependent) | *Selects the input signal frequency on CH1 for frequency correction.*<br><br>To indicate the measurement frequency, press the *Meas* > menu key and use any of the data entry controls to select the measurement frequency in GHz.<br><br>The frequency response characteristic for each Model 4500 sensor is recorded in an EEPROM in the sensor before shipment from the factory. The Model 4500 downloads this data into its processor memory and creates a look-up table of correction factors that are applied to each power measurement. The measurement frequency is examined to determine which factor is to be applied to the measurement. If the frequency selected lies between two values in the table, the Model 4500 automatically interpolates between them. |
| *Frequency CH2* (Numeric) | *Pwr & Stat* ➪ Continuous Range: (Sensor Dependent) | *Selects the input signal frequency on CH2 for frequency correction.*<br><br>For more details, see the explanation above. |
| *Power Mode* | *Pwr* ➪ | Toggles between Pulse and CW measurement submodes. |
| *Stat Mode* | *Stat* ➪ | Rotates through CDF, 1-CDF and PDF measurement submodes. |
| *Define Pulse* | *Pwr* ➪ | *Sets levels for the distal, mesial and proximal of measured pulses.*<br><br>See Table 4-17 for the *Meas* > *Define Pulse* > Submenu. |
| *Param Meas* | *Pwr* ➪ | *Assigns the automatic measurement to a parameter field.*<br><br>See Table 4-18 for the *Meas* > *Parameter Meas* > Submenu. |
| *# of Samples* | *Stat* ➪ | This selection sets a limit for the number of samples to be acquired. This acquisition takes place at about 500 kSa/sec for a channel 1 only, and 250 kSa/sec for if channel 2 is running. When the total number of points has been reached, the instrument will enter STOP mode. |
| *Confidence Band* (Toggle) | *Stat* ➪ 80%, 85%, 90% 95%, 99% | *Tolerance band around the CDF data.*<br><br>Based on confidence desired and the number of samples taken.<br><br>See Applications, Section 6. |

**Table 4-16. Ratio Conversion Chart**

| Ratio in dB | Power Ratio in % | Voltage Ratio in % |
|---|---|---|
| 0.00 | 100.00 | 100.00 |
| -0.46 | 90.0 | 94.9 |
| -0.92 | 81.0 | 90.0 |
| -3.01 | 50.0 | 70.7 |
| -6.02 | 25.0 | 50.0 |
| 10.00 | 10.0 | 31.6 |
| -20.00 | 1.0 | 10.0 |

**Table 4-17.** *Meas > Define Pulse >* **Submenu**

| Menu Item (Type) | Selections | Function |
|---|---|---|
| *Distal* (Numeric) | *Pwr* ➪ Continuous Range | *Changes the percentages of pulse peak power defining the distal.*<br><br>The distal is normally defined as 90% of the pulse peak power. The range is from the mesial to 100.00%. |
| *Mesial* (Numeric) | *Pwr* ➪ Continuous Range | *Changes the percentages of pulse peak power defining the mesial.*<br><br>The mesial is normally defined as 50 % of the pulse peak power. The range is from the proximal value to the distal value. |
| *Proximal* (Numeric) | *Pwr* ➪ Continuous Range | *Changes the percentages of pulse peak power defining the proximal.*<br><br>The proximal is normally defined as 10% of the pulse peak power. The range is from 0.00 to the mesial value. |
| *Meas Mode* (Toggle) | *Pwr* ➪ Pwr, Volts | *Changes the definition of the Distal, Mesial and Proximal point used to determine the automatic measurements.*<br><br>These points are set in percentage of the waveform. The original method always used the percentage of power. Now the percentage of voltage can be specified. All references to automatic measurements and specifications use the 90%, 50%, 10% of power unless specified differently. |
| **Note** | | For the automatic measurements to function properly, the distal must be greater than the mesial, which must be greater than the proximal. |

You may view the pulse measurement results by pressing the TEXT function key, which puts the instrument in the Automatic Measurement mode.

The *Meas* > *Param Meas* > submenu (Table 4-18) is used to determine the data displayed in the nine parameter fields at the top of the display when the instrument is in the graph mode. The default parameter mode of operation is status (Stat). When in this mode, the instrument will display the standard nine channel related fields of the currently selected channel. Changing the selected channel changes the color, and the data presented in the parameter fields.

The other mode available is the measure (Meas) selection. In this mode each parameter field can display the default status value or any of the automatic measurements from either channel 1 or 2. The entry in these fields can be made by using the knob, arrow keys or number entry. When using the knob or arrow keys the menu entry filed displays the name of the measurement assigned to that field. The selection can also be made with the data keypad.

**Table 4-18.** *Meas* > *Parameter Meas* > **Submenu**

| Menu Item (Type) | Selections | Function |
|---|---|---|
| *Channel Select* | *Pwr* ➪ | *This function changes the currently active channel and is equal to CHAN # > SELECT.*<br>Parameter assignments for automatic measurements use the selected channel at the assignment time to determine the channel for the measurement. |
| *Param Mode* | *Pwr* ➪<br>**Stat**, Meas | *The status (Stat) selection will display the status fields for the currently selected channel in all of the parameter fields.*<br>The measurement (Meas) selection will enable the display of the selected automatic measurements and status fields. |
| *Param Column* | *Pwr* ➪<br>L, M, R | *Selects the parameter column to which Top, Middle and Bottom entries will assign automatic measurements.* |

**Table 4-18.** *Meas > Parameter Meas >* **Submenu** *(continued)*

| Menu Item (Type) | Selections | Function |
|---|---|---|
| *Param Top* | *Pwr* ➪ | *Assigns the automatic measurement display location.* |
| | Status ⟶ Delay<br>0 14 | The parameter display mode must be set to measure in order to display the automatic measurements. The channel used for the measurement is selected from the currently active channel. |
| *Param Middle* | *Pwr* ➪ | *Assigns the automatic measurement display location.* |
| | Status ⟶ Delay<br>0 14 | The parameter display mode must be set to measure in order to display the automatic measurements. The channel used for the measurement is selected from the currently active channel. |
| *Param Bottom* | *Pwr* ➪ | *Assigns the automatic measurement display location.* |
| | Status ⟶ Delay<br>0 14 | The parameter display mode must be set to measure in order to display the automatic measurements. The channel used for the measurement is selected from the currently active channel. |

Table 4-19 gives the numeric equivalents of the automatic measurements which are displayed in the nine parameter fields when the Model 4400A/4500A is in the GRAPH display mode. The numbers 1 through 14 denote the automatic measurements. The TEXT display shows the order in which the numbers are assigned. For example, the first automatic measurement in the list is Pulse Width and is assigned the number 1. The second is Risetime and it is number 2. The channel selection for the assigned automatic measurement is determined by the currently selected channel when the assignment is made and will not change unless reassigned. The exception to this rule is the status selection. This will always show the status of the currently selected channel.

**Table 4-19. Numerical Equivalency of Automatic Measurements**

| Number | Description |
|---|---|
| 0 | Displays the default status value assigned to this field for the currently selected channel. |
| 1 | Assigns the Pulse Width of the currently selected channel to the assigned parameter window. |
| 2 | Assigns the Risetime of the currently selected channel to the assigned parameter window. |
| 3 | Assigns the Falltime of the currently selected channel to the assigned parameter window. |
| 4 | Assigns the Period of the currently selected channel to the assigned parameter window. |
| 5 | Assigns the Pulse Rep. Freq. (PRF) of the currently selected channel to the assigned parameter window. |
| 6 | Assigns the Duty Cycle of the currently selected channel to the assigned parameter window. |
| 7 | Assigns the Offtime of the currently selected channel to the assigned parameter window. |
| 8 | Assigns the Peak Power of the currently selected channel to the assigned parameter window. |
| 9 | Assigns the Pulse Power of the currently selected channel to the assigned parameter window. |
| 10 | Assigns the Overshoot of the currently selected channel to the assigned parameter window. |
| 11 | Assigns the Average Power of the currently selected channel to the assigned parameter window. |
| 12 | Assigns the Top Amplitude of the currently selected channel to the assigned parameter window. |
| 13 | Assigns the Bottom Amplitude of the currently selected channel to the assigned parameter window. |
| 14 | Assigns the Delay of the currently selected channel to the assigned parameter window. |

## 4.15 UTIL Key and *Util* > Menu

The **UTIL** key activates the *Util* > menu (See Table 4-20 and Figure 4-26), which enables you to view the instrument status summary, set up the IEEE-488 bus and serial input/output ports, and set the internal realtime clock.

**Table 4-20.** *Util* > **Menu**

| Menu Item (Type) | Selections | Function |
|---|---|---|
| *Inst Status* | REPORT | *Displays equipment serial numbers, configuration, and revision status.* (See Fig. 4-26) |
| *IEEE-488* | MENU | Accesses the *Util* > *IEEE-488* submenu. (See Fig. 4-27) |
| *Serial* | MENU | Accesses the *Util* > *Serial* submenu. (Table 4-23) |
| *Disk* | UTILITIES | Accesses the *Util* > *Disk* directory screen. *(Table 4-26)* |
| *Hardcopy* | MENU | Accesses the *Util* > *Hardcopy* submenu. (Table 4-30) |
| *Clock* | MENU | Accesses the *Util* > *Clock* submenu. (See Fig. 4-31) |

**Inst Status**

Press the *Util* > *Inst Status* menu key at the top of the *Util* > menu to display the equipment serial numbers, configuration, and revision status. See Figure 4-26. If the report indicates that Channel 1 or 2 is not responding, it is likely that a channel card is either not functional or not installed. If the Instrument Status Report indicates that the sensor is not connected, check the cable and sensor connections. The Report will also indicate the cable length for the input board. The cable length should match the configuration for the input board.

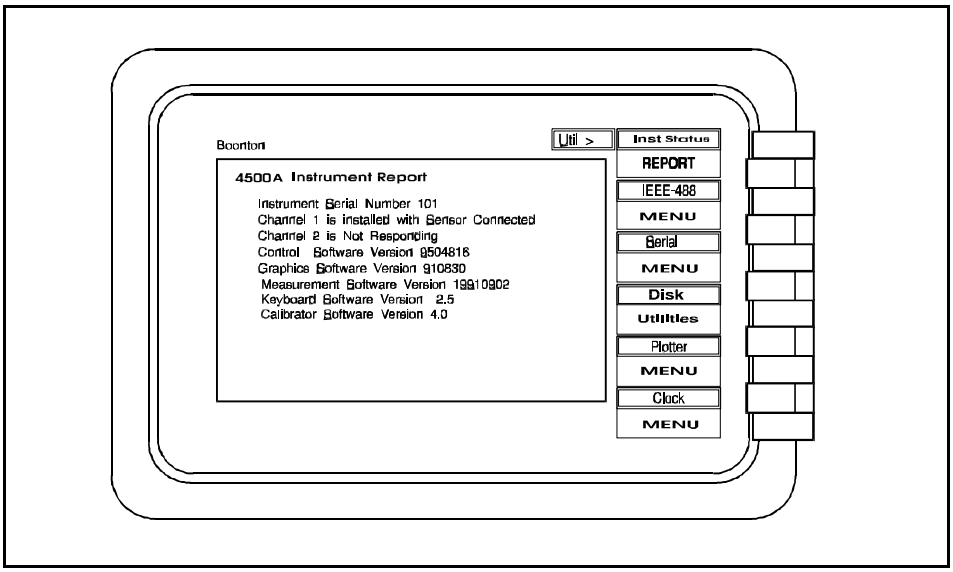


Figure 4-26. *Util* > Menu Inst Status Report

**IEEE-488 Bus**

Press the *Util* > *IEEE-48*8 menu key to display the submenu shown in Figure 4-27. The functions in this submenu enable you to configure and check the status of the IEEE-488 bus interface. Table 4-21 explains each of the submenu items.

**Bus Setup Submenu.** Press the *Util* > *IEEE-488* > *Bus Setup* > menu key to activate the *Bus Setup* submenu. The functions on this submenu enable you to configure the bus address, and terminating character strings for the Listen and Talk modes. You can also enable the optional EOI signal at the end of instrument Talk strings.

Figure 4-27.
*Util* > *IEEE-488* > Submenu

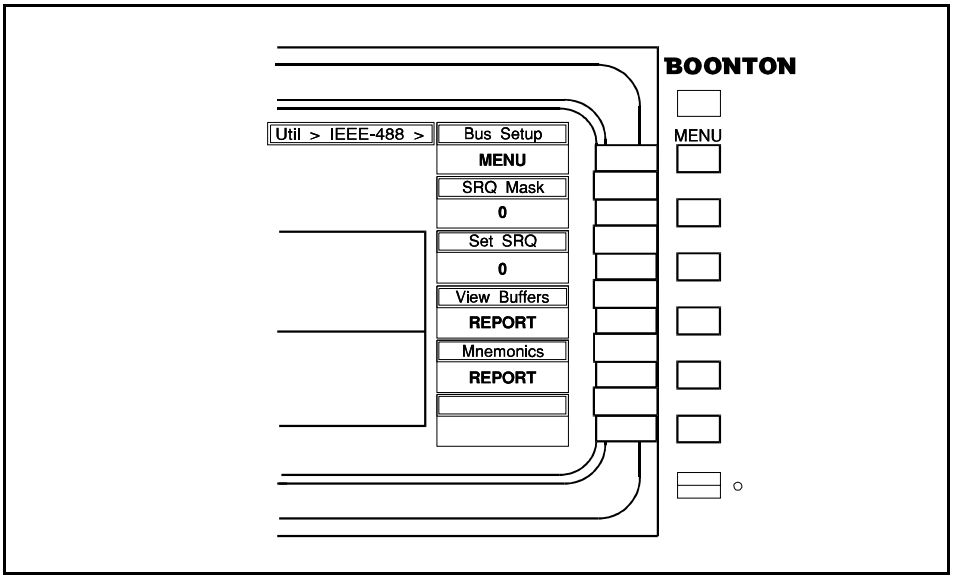


**Table 4-21.** *Util* >*IEEE-488* > **Submenu**

| Menu Item (Type) | Selections | Function |
|---|---|---|
| *Bus Setup* (Action) | MENU | Accesses the *Util* > *IEEE-488* > *Bus Setup* > submenu. See Figure 4-28 and Table 4-22. |
| *SRQ Mask* (Numeric) | Continuous Range (0 to 255) | *Enters the SRQ mask as a decimal number*<br><br>Press the *Util* > *IEEE-488* > *SRQ Mask* menu key to highlight this function. Use any of the data entry controls to enter the decimal equivalent of the SRQ mask.<br><br>The SRQ mask is a bit-level mask that is entered in a decimal number base. For example, enter 2 Decimal to activate the second bit ; enter 16 Decimal to activate the fourth bit; or enter 128 Decimal to activate the eighth bit.<br><br>Each bit in the mask enables the reporting of a service request for an individual function. The functions assigned to each bit are listed in Table 5-4 SRQ Mask Bit Assignments. |

**Table 4-21.** *Util >IEEE-488 >* **Submenu** *(continued)*

| Menu Item (Type) | Selections | Function |
|---|---|---|
| *Set SRQ* (Action) | SRQ | *Generates a request for service from the IEEE-488 bus controller.*<br><br>To generate a request for service from the IEEE-488 bus controller:<br><br>Use the *SRQ Mask* function to set the SRQ mask to a value of 128, or higher. This activates the SRQ function. When the SRQ is active, the front panel SRQ annunciator will be lit.<br><br>Press the *UTIL > IEEE-488 > Set SRQ* menu key.<br><br>The manual SRQ feature is useful in automatic routines that prompt users to initiate manual measurements, calibration or other functions. When the function is complete, the user can signal the controller by generating a manual service request.<br><br>The number that is displayed in the "Set SRQ" selection window is the current SRQ number, which is in effect after the mask is applied. If the SRQ light on the front panel is on, the operator can view the SRQ value that will be reported to the controller in the next polling cycle.<br><br>Pressing the **ESC** key when the instrument is in the local mode will clear any pending SRQ conditions. |
| *View Buffers* (Action) | REPORT | This function allows the inspection of expected bus messages in Listen mode, and pending outgoing messages in Talk mode. It is provided as a tool for troubleshooting bus communication problems. |
| *Mnemonics* (Action) | REPORT | *Reports acceptable bus mnemonics.*<br><br>*Press the Util > IEEE > Mnemonics* menu key to display a report listing all the bus mnemonics the instrument will accept. The report is organized into pages based on mnemonic length. Pressing the menu key repeatedly will display the next page in sequence. |

Figure 4-28. *Util > IEEE-488 > Bus Setup >* Submenu

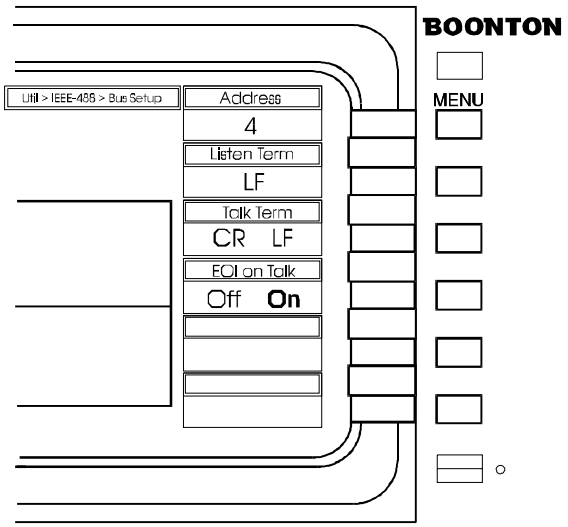


**Table 4-22.** *Util > IEEE-488 > Bus Setup >* **Submenu**

| Menu Item (Type) | Selections | Function |
|---|---|---|
| *Address* (Numeric) | Continuous Range (0 to 30) | *Sets the IEEE-488 address for the Model 4400A/4500A.*<br><br>The instrument address can be set to any value in the range from 0 to 30. Each instrument on the bus must be assigned a unique address. |
| *Listen Term* (Mult. Choice) | **LF**, CR | *Selects the terminating characters for the Listen mode.*<br><br>Press the *Util > IEEE-488 > Bus Setup > Listen Term* menu key until the desired terminating character appears in the selection window.<br><br>Each incoming message on the IEEE-488 bus ends with a terminating character, which can either be a CR or an LF. In the Listen mode, the instrument interprets only the final terminating character. For example, CR/LF is interpreted as LF.<br><br>The instrument always monitors the EOI line for an end of message indicator. The EOI function is optional; if it is not implemented at the controller, the instrument responds to the end of message character, as described above. |

**Table 4-22.** *Util > IEEE-488 > Bus Setup >* **Submenu***(continued)*

| Menu Item (Type) | Selections | Functions |
|---|---|---|
| *Talk Term* (Mult. Choice) | **CRLF**, LF, CR | *Selects the terminating character for the Talk mode.*<br><br>Press the *Util > IEEE-488 > Bus Setup > Talk Term* menu key until the desired terminating character appears in the selection window.<br><br>The Talk mode terminating character must match the controller configuration, or communications will hang up in an uncompleted message condition. |
| *EOI on TALK* (Toggle) | Off, **On** | *Enables or disables activation of the EOI line at the end of talk messages*<br><br>Press the *Util > IEEE-488 > Bus Setup > EOI on Talk* menu key until the desired terminating character appears in the selection window.<br><br>This selection informs the instrument whether to activate the EOI line at the end of each message. |

**Serial Menu**

Press the *Util > Serial* menu key to display the Serial Port submenus (Table 4-23). The submenu items are explained in Table 4-24 and Table 4-25.

**Table 4-23.** *Util > Serial >* **Submenu**

| Menu Item (Type) | Selections | Functions |
|---|---|---|
| *COM 1* | MENU | Accesses the *Util > Serial > COM 1* submenu (Table 4-24). |
| *COM 2* | MENU | Accesses the *Util > Serial > COM 2* submenu (Table 4-25). |

**Serial Port 1**

Press the *Util > Serial > COM 1* menu key to display the protocol options associated with the EIA RS232C serial communication port on the rear panel. Table 4-24 describes the menu items. Port 1 connects to an optional (user furnished) output device, such as a plotter. See **Appendix B Plotter Operation** for additional information on making connections to Serial Port #1 and configuring the plotter.

**Table 4-24.** *Util > Serial > COM 1* **Submenu**

| Menu Item (Type) | Selections | Function |
|---|---|---|
| *Baud Rate* (Numeric) | *Discrete Range:* 300 to 38.4K Baud | *Controls the transmission speed on Serial Port 1.*<br><br>Press the *Util > COM 1 > Baud Rate* menu key until the desired data speed appears in the selection window. |
| *Length* (Toggle) | 7, 8 | *Selects the word length (in bits) for the words transmitted through Serial Port 1.*<br><br>Press the *Util > COM 1 > Length* menu key until the desired word length appears in the selection box. |
| *Stop Bits* (Toggle) | 1,2 | *Selects the number of stop bits in each binary word.*<br><br>Press the *Util > COM 1 > Stop Bits* menu key until the desired number of Stop bits appears in the selection window. |
| *Parity Bit* (Mult. Choice) | Odd, None, Even | *Selects the type of parity check that will be applied to each block of input/output data.*<br><br>Press the *Util > COM 1 > Parity Bit* menu key until the desired parity chcking technique appears in the selection window. |
| *HandShake* (Mult. Choice) | None, RTS, CTS, RTS & CTS | *Selects the handshaking protocol to be supported on the selected serial port.*<br><br>Press the *Util > COM 1 > HandShake* menu key until the desired RS232C line control function appears in the selection box. |
| *Xon/Xoff* (Toggle) | Off, On | *Enables or disables the use of the Xon/Xoff protocol.*<br><br>The Xon/Xoff protocol uses in-line characters to control the data rate. For this mode to operate correctly the output device connected must support Xon/Xoff. |

**Serial Port 2**

Serial Port 2 accommodates an external (user furnished) maintenance terminal. This feature can help you troubleshoot and repair instrument failures; it is particularly useful when the monitor is inoperative. Port 2 uses minimal hardware to establish communications with a terminal or a PC operating in the terminal- emulation mode. All COM 2 settings are fixed to the parameters shown in Figure 4-29. Table 4-25 describes the menu items. All data is in the form of ASCII characters to assure compatibility with a wide variety of terminals.

Figure 4-29.
*Util > Serial > COM 2 >*
Submenu

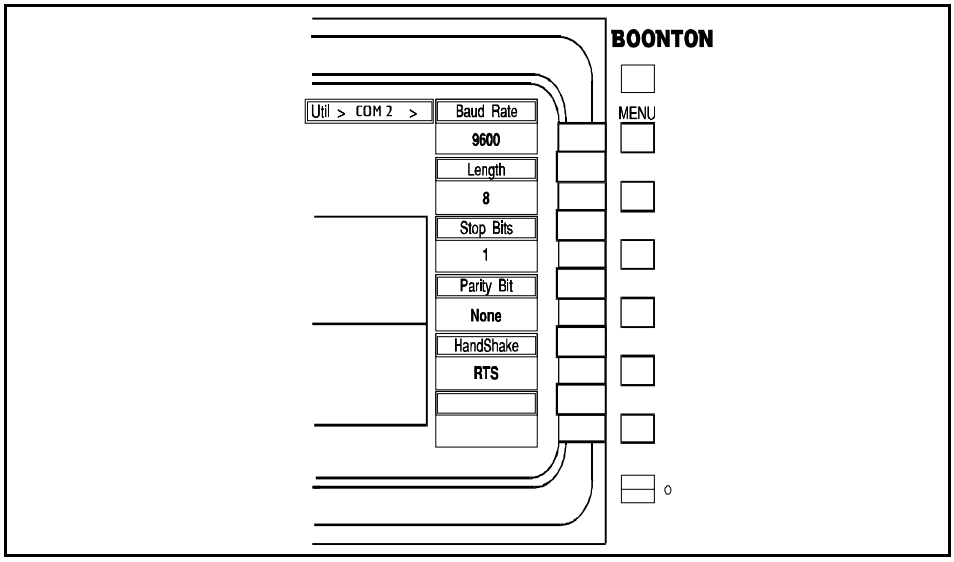


**Table 4-25.** *Util > Serial > COM 2* **Submenu**

| Menu Item (Type) | Selections | Function |
|---|---|---|
| *Baud Rate* | 9600 | The baud rate is 9600. |
| *Stop Bits* | 1 | There is only 1 stop bit. |
| *Parity Bit* | None | Parity is disabled. |
| *HandShake* | RTS | The handshake support ready to send. |
| *Length* | 8 | The word length (in bits) is 8. |

### Disk Utilities

Press the Util > Disk UTILITIES key to display a directory page for the floppy disk currently in the front panel drive, along with menu options to view more files or delete a selected file as shown in Table 4-27.

The 4400A/4500A supports standard DOS formatted 720K or 1.44MB 3½ " floppy disks. Since the instrument has no provision to support full DOS pathnames, all files must be in the root directory. Any subdirectories and files in them are ignored. Each file the instrument creates is named with a filename prefix followed by a sequence number and file extension. The filename prefix identifies the instrument model which created the file: "B4400A" for the Model 4400A and "B4500A" for the Model 4500A. The sequence number is a two-digit number appended to the filename prefix which identifies individual files of a particular type. The prefix may range from "00" to "99", allowing up to 100 unique files of each type. The three character extension indicates the file type from one of four possible types that can be created by the Model 4400A/4500A: ".INS", ".WFM", ".HGL", or ".PRN". Table 4-26 shows information about each type of supported file.

## Table 4-26. File Information

| Menu Item (Type) | Selections | Function |
|---|---|---|
| *B4500A##.INS* | ≈2.0 kBytes | (Instrument Setup) ASCII File |
| *B4500A##.WFM* | ≈3.5 kBytes | (Single waveform storage) Binary File |
| *B4500A##.HGL* | ≈16.5 kBytes | (Screen Plot) ASCII Plotter File |
| *B4500A##.PRN* | ≈42.0 kBytes | (Screen Print) Binary Printer File |

*NOTE:* The ## is the select number to uniquely identify the specific file. This number will always be a two character ASCII number with a zero filler for numbers less than ten.

## Table 4-27. *Util > Disk Utilities* Submenu

| Menu Item (Type) | Selections | Functions |
|---|---|---|
| *Select* | 0 to 99 | *Selects an individual file for deletion.* |
| *Extension* | .HGL, . PRN, .INS, .WFM | *Determines the file type for all displayed files.*<br><br>The directory will only display one file type at a time. Changing the extension will cause the directory display to be updated with the new file type.<br>.HGL - plot files<br>.PRN - printer files<br>.INS - instrument setup files<br>.WFM - waveform files |
| *Page* | Next | When displaying the directory for a large number of files of one type, the instrument will show the files in numerical order (by sequence number) and pause after each screenful. Pressing *Util > Disk > Page* Next will scroll to the next screen if there are more files left to display; otherwise it will return to the first screen. |
| *Delete* | START | *Deletes the selected file.*<br><br>Depress the "Delete START" menu key. The user will be prompted with "Are you sure? ENT-yes/ANY KEY-no" in the message field for verification. Storing to the disk cannot overwrite an existing file. The file must first be deleted. |
| *Bytes Free* | REPORT | *Reports the number of bytes available on the diskette for storage.*<br><br>The status number is updated during a disk access. If data is stored or deleted from the disk, the bytes free report is updated. If there is no disk in the drive the window will display "NO DISK". |

**Hardcopy**

Press the *Util > Plotter* menu key to display the plotter information described in Table 4-28.

**Table 4-28.** *Util > Hardcopy* **Submenu**

| Menu Item (Type) | Selections | Function |
|---|---|---|
| *Device* (Mult. Choice) | Plotter, Printer | *This function selects the class of output device.*<br><br>All plotters are HPGL compatible devices.<br><br>The printers are PCL format raster output devices. Printers have the advantage of recording persistence from the screen. |
| *Model* | *Printer*<br>ThinkJet<br>LaserJet<br><br>*Plotter*<br>HPGL, HP7470<br>HP7475, FPG310 | *Selects a particular model printer/plotter for page formatting.*<br><br>Select the a device model that matches or is similar to the printer/plotter you wish to use. This selection controls page size, resolution, position, and rotation. |
| *Output Port* (Mult. Choice) | LPT1, COM1, IEEE-4888, Disk | *Selects the communication port or disk file used for the hardcopy output.*<br><br>The parallel port connects to a standard Centronics-type printer.<br><br>For the serial port all parameters under the *Util > Serial > Serial 1* menu must match the output device settings.<br><br>For the IEEE-488 interface, the output device must be in the listen only mode. See Appendix B for more details on generating output.<br><br>When the SYSTEM "PLOT" key is depressed the print/plot data is sent to the selected output, or to a disk file. |
| File Select | 0 to 99 | *Selects the sequence number (filename) for the file that will be created when a PLOT operation is performed.*<br><br>When the plot data is directed to a file, the data is stored to the file indicated by the select number. The file name will always be B4500A##.EXT. The EXT will be HGL for plotter output and PRN for printer output. The instrument automatically checks for an existing file and sufficient disk space and reports an error if there is not sufficient space for the file to be stored or if a file by that name already exists on the disk. |
| *Plot Label* (Toggle) | Off, On | *This function enables the display and output of 4 plot label lines.*<br><br>These lines are located in the upper right of the graph display. The content of the label can be altered by using the IEEE-488 interface or by recalling an instrument setup file. An ASCII text file can be created on a PC with the required mnemonics to change the plot label. For example, if a file named "B4500A10.INS" contains the following:<br><br>PLABEL1 "This is a plot"<br>PLABEL2 "label message"<br>PLABELON<br><br>and an instrument recall of the file is executed, then that message would appear in the plot label field. The label is nonvolatile and can be disabled and reenabled at any time. |

**Table 4-28.** *Util > Hardcopy* **Submenu** *(Continued)*

| Menu Item (Type) | Selections | Function |
|---|---|---|
| *Graph & Text* (Toggle) | Off, On | *This option only applies when the selected output device is a printer.*<br><br>When enabled, this feature spools both the graphics and text screens when the PLOT button is pressed, no matter which screen mode is currently active. If Graph & Text is off or a plotter is the selected output device, only the currently displayed screen will be printed. In this case the screen mode must be changed manually by pressing the TEXT/GRAPH button then plotting again. |

## Clock

Press the *Util > Clock >* menu key to display the internal real-time clock submenu illustrated in Figure 4-30. The menu entries are explained in Table 4-29.

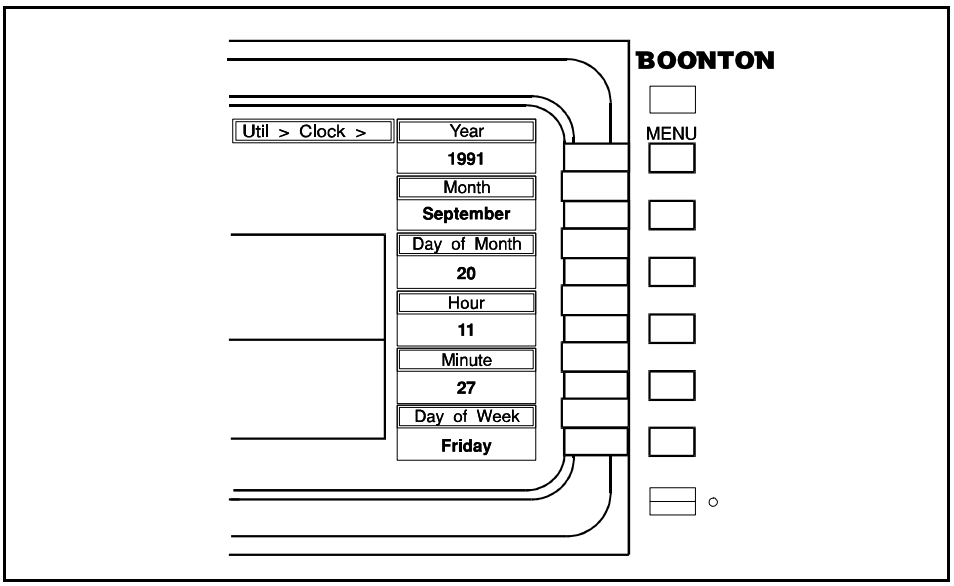


Figure 4-30.
*Util >Clock >* Submenu

The internal clock operates on battery power to maintain accuracy in the event power is removed from the instrument. Note, however, that after the *Util > Clock* menu has been activated, the information on the screen display is not updated until the submenu is deactivated and reactivated.

**Table 4-29.** *Util > Clock >* **Submenu**

| Menu Item (Type) | Selections | Function |
|---|---|---|
| *Year* (Numeric) | Discrete Range: (1990 - 2089) | *Sets the year in the date code that appears in the display header.*<br><br>Use the spin knob, right-left arrow keys, or numeric keypad to select the year. |
| *Month* (Numeric) | Discrete Range: (Jan. - Dec.) | *Sets the month in the date code that appears in the display header.*<br><br>Use the spin knob, right-left arrow keys, or numeric keypad to select the month (January = 1, February = 2, etc.). |
| *Day of Month* (Numeric) | Discrete Range: (1 - 31) | *Sets the day of the month in the date code that appears in the display header.*<br><br>Use the spin knob, right-left arrow keys, or numeric keypad to select the day of the month. |
| *Hour* (Numeric) | Discrete Range: (0 - 23) | *Sets the hour in the date code that appears in the display header.*<br><br>Use the spin knob, right-left arrow keys, or numeric keypad to select the hour. |
| *Minute* (Numeric) | Discrete Range: (0 - 59) | *Sets the minute in the date code that appears in the display header.*<br><br>Use the spin knob, right-left arrow keys, or numeric keypad to select the minute. Note that the seconds are automatically reset to zero whenever the minutes value is changed. |
| *Day of Week* | Display Only | *Displays the current day of the week – Automatically calculated.* |

## 4-16. SPCL Key and *Spcl* > Menu

The **SPCL** key activates the *Spcl* > menu (Figure 4-31), which enables you to initiate the internal self-test and diagnostic routines, adjust the calibrator output and view sensor specifications, and control special instrument functions.

**Table 4-30.** *Spec* >**Menu**

| Menu Item (Type) | Selections | Function |
|---|---|---|
| *Servicing* | MENU | *Accesses the SPCL > Servicing submenu (See Fig. 4-32)* |
| *Calibrator* | MENU | Accesses the SPCL > Calibrator submenu (See Fig. 4-34) |
| *CH 1 Sensor* | REPORT | Displays a sensor report for Channel 1. (See Fig. 4-33) |
| *CH 2 Sensor* | REPORT | Displays a sensor report for Channel 2. (See Fig. 4-33)<br>The sensor report contains the sensor model, serial number, calibration information, autocal and current temperatures, attenuation, impedance, and power and frequency ranges for the sensor currently connected to the specified channel. With the exception of the current and auto-cal temperatures, this report information is read from the factory-programmed sensor EEPROM. |
| *Peaking Mode* (Toggle) | Pwr ⇨ **Off**, On | Turns Peaking Mode on or off.<br>Peaking mode is a special feature of the Model 4400A/4500A that controls how the sampled waveform is processed and displayed at slow timebases. When the timebase is set to 5ms/div or faster, each display pixel corresponds to the power level of the waveform at a single point in time relative to the trigger. When the timebase is 10ms/div or slower, each display pixel is either an average of the continuously sampled waveform during that pixel interval (peaking mode off) or the maximum power level sampled during the pixel interval (peaking mode on).<br>Each pixel is 1/50th of a screen division, and the sample rate is 1MSa/sec. For a 10ms/div timebase, each pixel is 200µs long, and corresponds to 200 samples of the waveform. If peaking mode is off, the power level for that pixel (as displayed and read by the markers) will be the average of those 200 samples during that 1ms interval. If peaking mode is on, the pixel's value will be the peak power level during the interval.<br>Note that this averaging/peaking operation on slow timebases is independent of the trace averaging. Trace averaging will further reduce the signal noise if peaking mode is off, but will tend to average out the peak signal events when peaking mode is in use. |
| *Auto CENTER* (Toggle) | Off, On | Turns the Auto Center feature on or off.<br>Auto CENTER |

Press the *Spcl* > *Servicing* menu key to display the self-test and calibration control submenu illustrated in Figure 4-32.

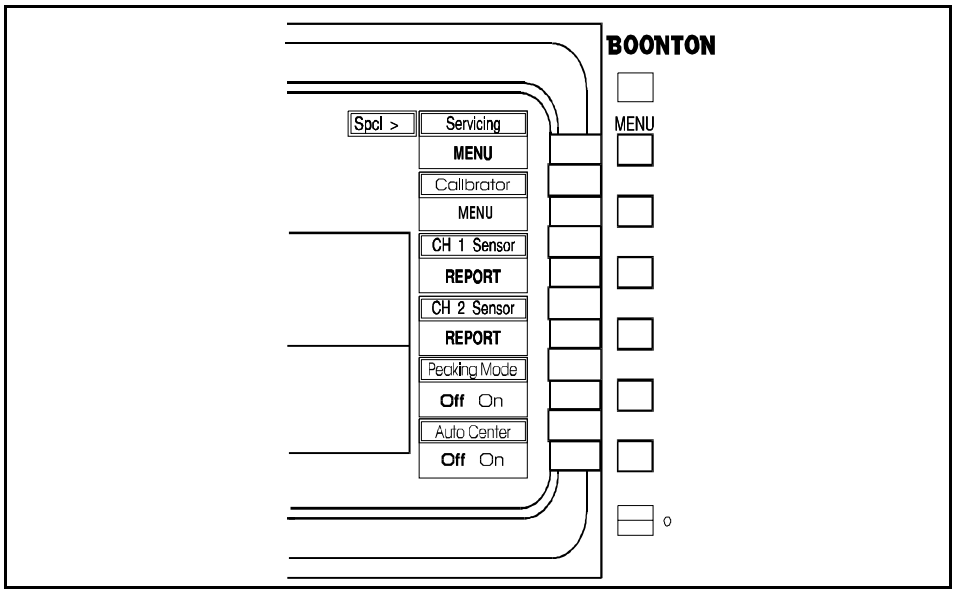


Figure 4-31. *Spcl* > Menu

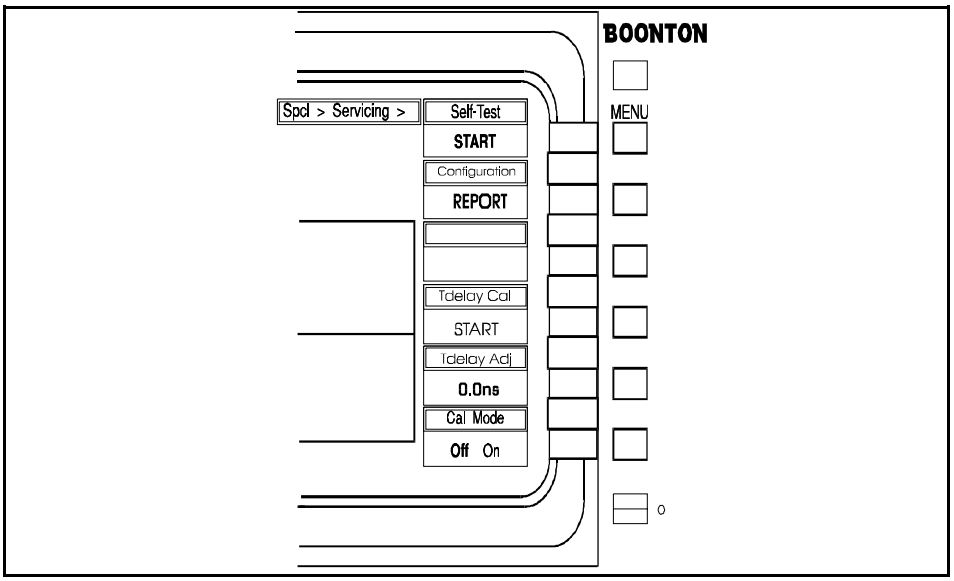


Figure 4-32. *Spcl* > *Servicing* > Submenu

**Self-Test**

Press the *Spcl > Servicing > Self-Test* menu key to initiate an internal test of all the Model 4400A/4500A modules. Any errors are reported in the Message Line of the display. The items tested during this procedure are listed in Table 4-33. These tests are performed automatically when you power on the instrument.

**Table 4-31. Self-Test Parameters**

| Item | Description |
|---|---|
| 1 | EEPROM Checksum |
| 2 | DSP Self-Test |
| 3 | Keyboard Self-Test |
| 4 | Calibrator Self-Test |
| 5 | Sensor Operation |
| 6 | Input Circuit Board Operation |

**Configuration**

Pressing Spcl > Servicing > Configuration REPORT displays a report of the instrument's current hardware and software installation settings. This information can be a useful troubleshooting aid when reporting operational difficulties to Boonton Electronics Technical Support.

**Cal Mode**

When you turn on *Spcl > Servicing > Cal Mode* you activate the *Spcl > Calibrator > Extensions > Fixed Cal* function (see discussion of the *Spcl > Calibrator > Extensions* functions in Table 4-36). These enables you to adjust the absolute 0 dBm point of the internal calibrator using an external standard. Procedures for making this adjustment are provided in **Section 7 Maintenance**.

**Warning**

Adjusting the calibrator 0 dBm point invalidates the factory calibration and certifications. See **Section 7 Maintenance**.

**Caution**

Be sure to disable *Spcl > Servicing > Cal Mode* after you have completed the calibrator adjustment procedure.

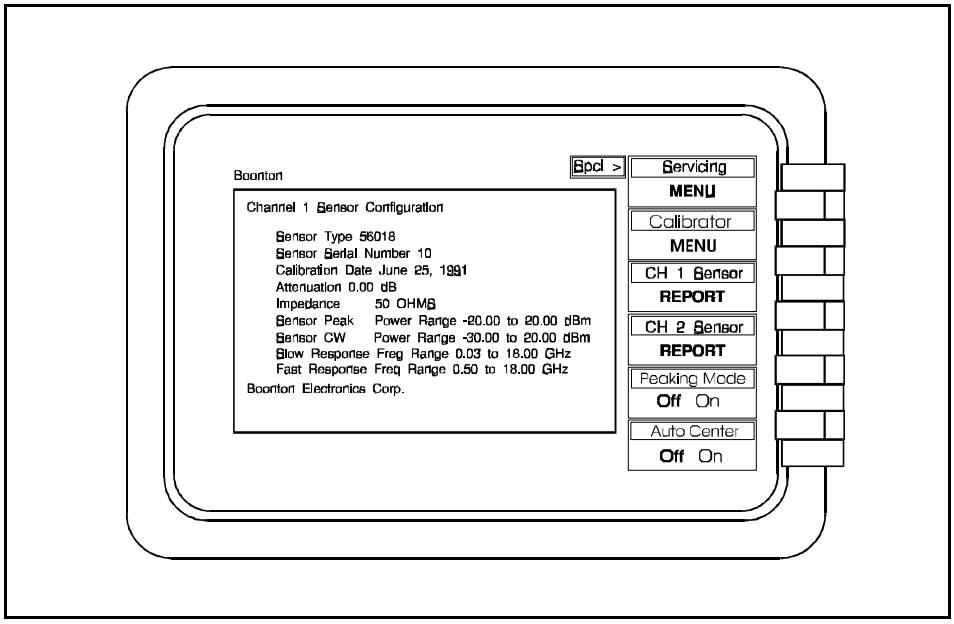


Figure 4-33.
*Spcl > CH # Sensor >* Report

With the *Spcl > Calibrator >* menu (Figure 4-34), you can turn on the calibrator output and adjust the calibrator signal parameters. The items in the *Spcl > Calibrator>* menu and its two submenus are presented in the following figures and tables:

| Menu or Submenu | Figure | Table |
|---|---|---|
| *Spcl > Calibrator >* | 4-34 | 4-32 |
| *Spcl > Calibrator > Pulse* | 4-35 | 4-33 |
| *Spcl > Calibrator > Extensions* | 4-36 | 4-34 |

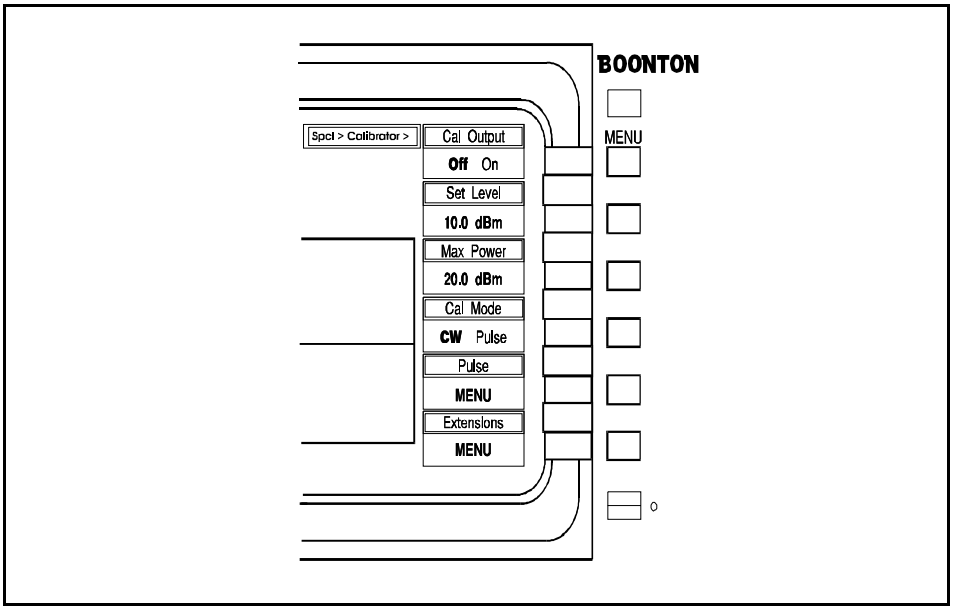


Figure 4-34.
*Spcl > Calibrator >* Menu

**Table 4-32.** *Spcl* > *Calibrator* > **Menu**

| Menu Item (Type) | Selections | Function |
|---|---|---|
| *Cal Output* (Toggle) | **Off**, On | *Activates the calibrator output.*<br><br>Press the *Spcl* > *Calibrator* > *Cal Output* menu key to activate the calibrator output signal. |
| *Set Level* (Numeric) | Continuous Range: -40 to +20 dBm | *Sets the calibrator output level.*<br><br>Press the *Spcl* > *Calibrator* > *Set Level* menu key to activate this function. Use the data entry controls to adjust the calibrator output power to the desired level. |
| *Max Power* (Numeric) | Continuous Range: -40 to +20 dBm | *Establishes the upper limit for the calibrator output power.*<br><br>Press the *Spcl* > *Calibrator* > *Max Power* menu key to activate this function. Use the data entry controls to adjust the upper limit of calibrator output power.<br><br>An error message will be generated if you attempt to set the *Spcl* > *Calibrator* > *Max Power* parameter below the *Set Level* parameter, or if you attempt to set the *Set Level* value greater than the *Spcl* > *Calibrator* > *Max Power* parameter. |
| *Cal Mode* (Toggle) | **CW**, Pulse | *Selects the calibrator output signal format.* |
| *Pulse* | MENU | Accesses the *Spcl* > *Calibrator* > *Pulse* submenu. See Figure 4-35. |
| *Extensions* | MENU | Accesses the *Spcl* > *Calibrator* > *Extensions* submenu. |

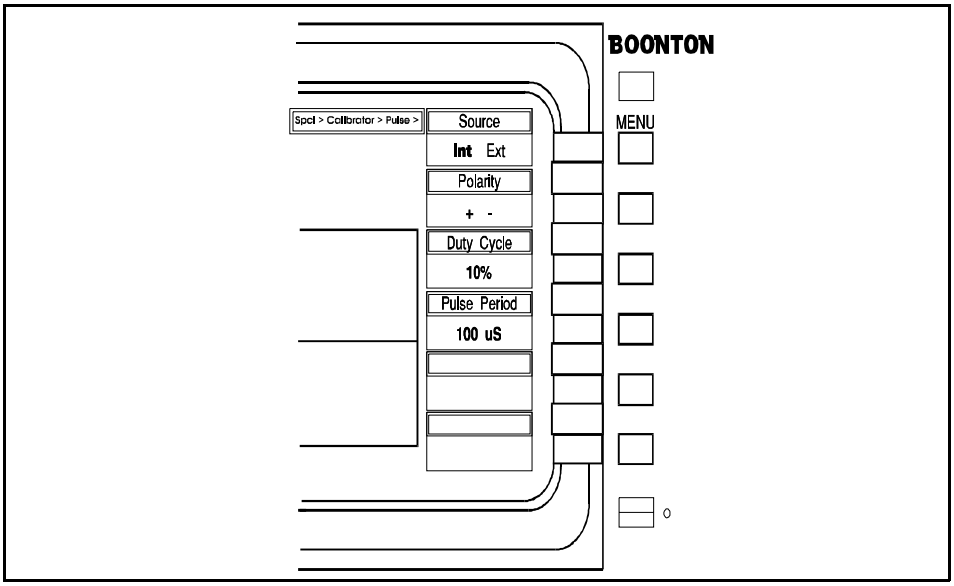


Figure 4-35. *Spcl* > *Calibrator* > *Pulse* > Submenu

**Table 4-33.** *Spcl > Calibrator >Pulse >* **Submenu**

| Menu Item (Type) | Selections | Function |
|---|---|---|
| *Source* (Toggle) | **Int**, Ext | *Selects the source for the calibrator output pulse.*<br><br>Press the *Spcl > Calibrator > Pulse >* menu key to specify whether the calibrator output pulse is to be internally or externally generated. |
| *Polarity* (Toggle) | +, - | *Selects the polarity for the calibrator output signal.*<br><br>Press the *Spcl > Calibrator > Pulse > Polarity* menu key to select positive-going or negative-going calibrator output pulses. |
| *Duty Cycle* (Numeric) | Discrete Range: 10, 20, 30, 40 and 50% | *Selects the calibrator pulse train duty cycle.*<br><br>Press the *Spcl > Calibrator > Pulse > Duty Cycle* menu key to step through the range of available duty cycles. |
| **Note** | Additional duty cycles of 60, 70, 80 and 90% may be obtained by inverting the pulse. (Select "-" polarity.) | |
| *Pulse Period* (Numeric) | Discrete Range 100 uS, 1 mS and 10 mS) | *Selects the period of the calibrator pulse train.*<br><br>Press the *Spcl > Calibrator > Pulse > Pulse Period* menu key to step through the range of available pulse periods. |

Table 4-33 indicates that the duty cycle and pulse period parameters are discretely variable in the specified ranges. If necessary, continuous ranges of duty cycle and pulse period may be obtained by connecting an external pulse generator to the rear-mounted BNC connector labeled "EXT PULSE" and selecting "Ext" in the *Spcl > Calibrator > Pulse > Source* window. TTL-level signals connected at this port will gate the 1 GHz calibration signal on and off.

**Extensions**

You can view a listing of calibrator information by pressing the *Spcl > Calibrator > Extensions > Calibrator* menu key. The Calibrator Report lists the calibrator information shown in Figure 4-36. A non-zero status reading indicates that an error condition exits.

If the instrument is in the calibration mode (see discussion of *Spcl > Servicing > Cal Mode* in Subsection 4.16), the *Spcl > Calibrator > Extensions > Fixed Cal* window will appear at the bottom of the menu. This window enables you to adjust the calibrator output precisely, as described in **Section 7 Maintenance**.

**Warning**

Adjusting the calibrator 0 dBm point invalidates the factory calibration and certifications. **See Section 7 Maintenance**.

**Table 4-34.** *Spcl > Calibrator > Extensions >* **Menu**

| Menu Item (Type) | Selections | Function |
|---|---|---|
| *Calibrator* | REPORT | *Includes information about the installed calibrator.*<br><br>Includes STATUS, SERIAL NUMBER, SOFTWARE VERSION, CALIBRATION DATE and INTERNAL TEMPERATURE. |
| *Level Step* (Numeric) | 0.1 to 60 dB | *Selects the step level for the calibrator.*<br><br>The step level value is incremented or decremented from the current calibrator when the knob or arrow keys are activated. |

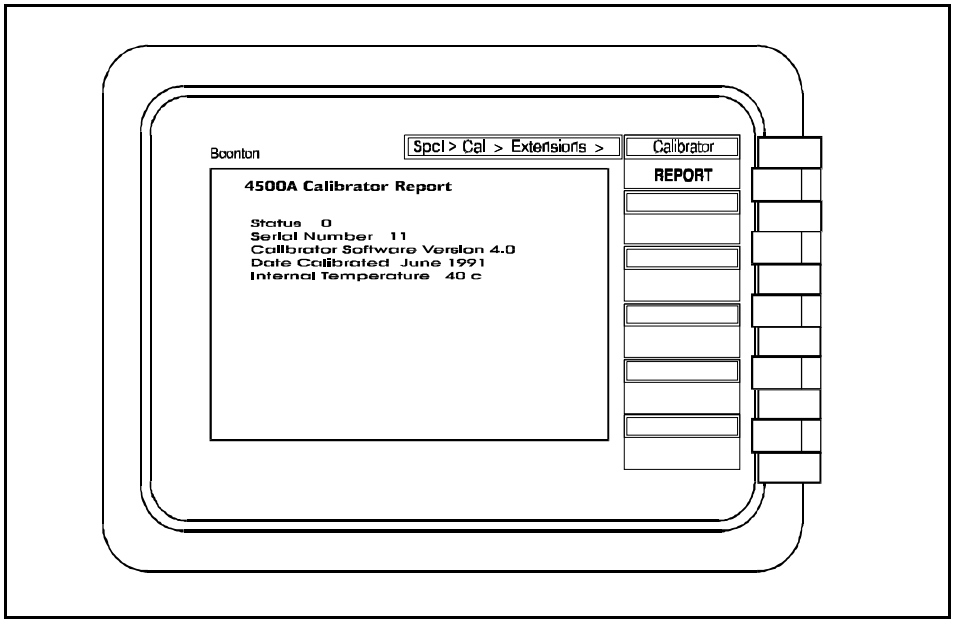


Figure 4-36. 4400A/4500A Calibrator Report

## 4.17 PRGM Key and *Prgm* > Menu

The **PRGM** key activates the *Prgm* > menu (Figure 4-37), which enables you to store one or more instrument configurations for later recall and reuse.

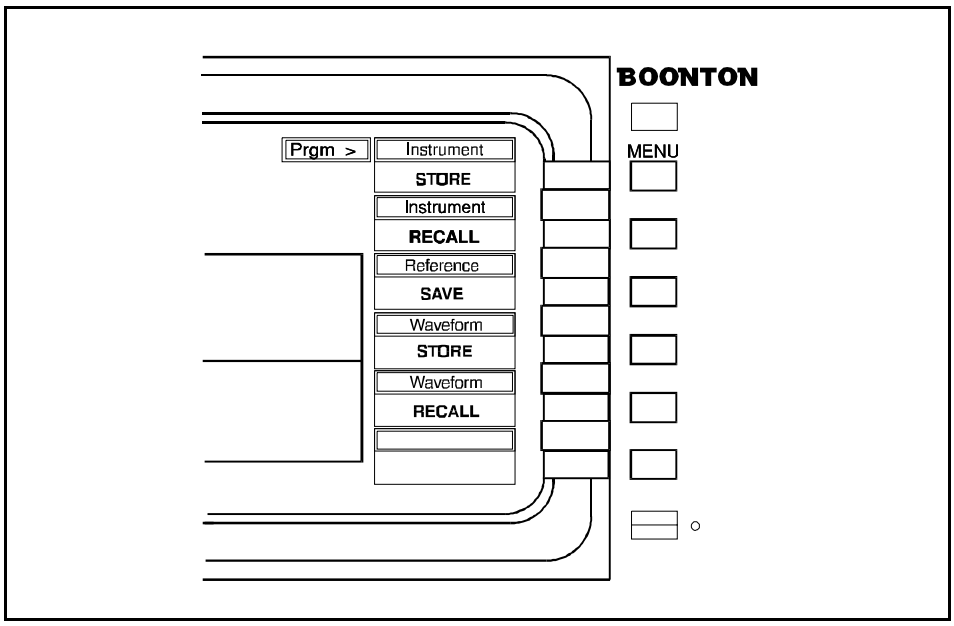


Figure 4-37. *Prgm* > Menu

The Model 4400A/4500A is equipped with ten non-volatile memory locations, in which you may store up to ten instrument setup (configuration) files. This is useful for saving configurations you develop for specific measurements. To make similar measurements later, you can save time by recalling the appropriate configuration from memory, rather than accessing several control menus to reestablish the desired conditions.

The items contained in each saved configuration file are listed in Table 3-3. Items not included in the store and recall operations include parameters related to the IEEE-488 bus, Serial Ports 1 and 2, plotter, clock and display colors. Initially, each memory location contains the factory default settings until a user-generated configuration is saved in it. Memory Location 0 is used to recall the factory defaults without the resetting, testing, and reloading overhead of the **INIT** function. Location 0 cannot be used to store user-generated configuration data.

**Caution**

Saving configuration data in a memory location overwrites any data that resides there. Be sure to keep an updated record of any saved configurations and their location to avoid accidental loss.

To **save** the current configuration, press the *Prgm > Instr STORE* menu key (Table 4-35) and use the data entry controls to select the destination memory location (other than Location 0 which is used by Instrument Recall as a read only location).

To **recall** a previously stored configuration, select the *Prgm > Instr RECALL* submenu (Table 4-36) and select the memory location in which the configuration is stored.

**Instrument Store Submenu.** This submenu (Table 4-35) allows the user to store instrument setups to non-volatile memory or a disk file. There are 10 non-volatile memory locations and up to 100 locations on each disk for setups. Instrument setups do not include every instrument programmable function (see above). In general, hardware specific configurations are not saved and must be set individually. Examples are display colors, IEEE-488 configurations, the Serial port configuration, the plotter selection and output port. These parameters are usually fixed for a specific installation and are not transferrable to other instruments.

The disk based instrument store builds an ASCII DOS compatible file on the disk of the current instrument configuration using IEEE-488 bus mnemonics. The storage to the disk will be to file "B4500A##.INS" ("B4400A##.INS" for the Model 4400A) where ## is the number in the select menu. These files can be edited to include any valid bus commands and the instrument will respond to them. This allows the user to add commands to configure hardware that is not normally included in the setup files. An example of this is described in Table 4-30, *Util > Plotter > Plot Label*, where the plot label is easily changed without the aid of an IEEE-Bus controller. When editing an instrument setup remember that the commands are executed as they are read from disk. The sequence of commands is very important. For example, channel related commands affect the currently selected channel. This means that VSCALE 20 will set the currently selected channel to 20 dB per division. The currently selected channel is determined by the last occurrence of the CH1, CH2, CHM, REF1, REF2 commands. (CH1 VSCALE 20 CH2 VSCALE 10) would set channel 1 to a vertical scale of 20 dB per division and channel 2 to 10 dB per division.

**Table 4-35.** *Prgm > Instr Store >* **Submenu**

| Menu Item (Type) | Selections | Functions |
|---|---|---|
| *Select* (Numeric) | 1 to 10 (0 to 99) | *Identifies the location to save the instrument setup.*<br><br>The range is different based on the destination. There are 10 (1 to 10) memory locations and 100 (0 to 99) file locations. |
| *Source* (Fixed) | MEMORY | *The source for all instrument store operations is from memory.* |
| *Destination* (Toggle) | **NVRAM**, Disk | The destination for instrument store operations can be either non-volatile memory or disk locations. The specific location is selected by the *Prgm > Instr Store > Select* menu. The range of the select entry is different depending on the destination. Memory options are 1 to 10 and disk options are 0 to 99 per disk. |
| *Instrument* (Action) | STORE | *Executes the store operation.*<br><br>For disk operations a disk must be in the disk drive, and the selected file name must be unique. Existing files will not be overwritten. The user will be prompted if file already exists. The file must first be removed using the delete function. When saving to disk, wait until the disking operation is complete before removing the disk. |
| *Bytes Free* | REPORT | *Reports the number of bytes available on the diskette for storage.*<br><br>The status number is updated during a disk access. If data is stored or deleted from the disk, the bytes free report is updated. If there is no disk in the drive the window will display "NO DISK". |

**Instrument Recall Submenu.** This menu (Table 4-36) allows the user to recall instrument setups from non-volatile memory or a disk file. There are 11 non-volatile memory locations and up to 100 locations on each disk for setups. Instrument setups do not include every instrument programmable function (see above). In general, hardware specific configurations are not saved and must be set individually. Examples include display colors, IEEE-488 configurations, the Serial port configuration, the plotter selection and output port. These parameters are usually fixed for a specific installation and are not transferrable to other instruments.

Remember that the instrument has ten store locations (1 - 10), but the Instrument Recall also uses location 0 as a read only location. This location will always restore the instrument to its factory set defaults. This is different than the reset function which also performs hardware resets and self-tests which require more time.

The file recall reads an ASCII, DOS compatible file on the disk of the current instrument configuration using IEEE-488 bus mnemonics. The storage to the disk will be to file "B4500A##.INS" ("B4400A##.INS" for the Model 4400A) where ## is the number in the select menu. These files can be edited to include any valid bus commands and the instrument will respond to them. This allows the user to add commands to configure hardware that is not normally included in the setup files.

When editing an instrument setup remember that the commands are executed as they are read from disk. The sequence of commands is very important. For example, channel related commands affect the currently selected channel. This means that VSCALE 20 will set the currently selected channel to 20 dB per division. The currently selected channel is determined by the last occurrence of the CH1, CH2, CHM, REF1, REF2 commands. (CH1 VSCALE 20 CH2 VSCALE 10) would set channel 1 to a vertical scale of 20 dB per division and channel 2 to 10 dB per division.

For more information on directory, file deletion, and disk formatting see Tables 4-27.

**Table 4-36.** *Prgm > Instr Recall >* **Submenu**

| Menu Item (Type) | Selections | Functions |
|---|---|---|
| *Select* (Numeric) | 0 to 10 (0 to 99) | *Identifies the location where the instrument setup is saved.*<br><br>The range is different based on the destination. There are 11 (0 to 10) memory locations and 100 (0 to 99) file locations. |
| *Source* (Toggle) | **NVRAM**, Disk | The source for instrument recall operations can be either non-volatile memory or disk locations. The specific location is selected by the *Prgm > Instr Recall> Select* menu. The range of the select entry is different depending on the destination. Memory options are 0 to 10 and disk options are 0 to 99 per disk. |
| *Destination* (Fixed) | MEMORY | *The destination for all instrument recall operations is to memory.* |
| *Instrument* (Action) | RECALL | *Executes the recall operation.*<br><br>For disk operations, a disk must be in the disk drive, and the selected file name must exist. When recalling from disk wait until the disking operation is complete before removing the disk. |
| *Bytes Free* | REPORT | *Reports the number of bytes available on the diskette for storage.*<br><br>The status number is updated during a disk access. If data is stored or deleted from the disk, the bytes free report is updated. If there is no disk in the drive the window will display "NO DISK". |

**Reference Save Submenu.** This menu (Table 4-37) allows the operator to save channel 1, channel 2, or channel math waveforms to either of the reference waveform storage memories.

When a waveform is stored to a reference channel, the instrument records the current measurement mode. The stored reference waveform may only be displayed when the instrument is set for that same measurement mode. If the measurement modes are not the same, an error message will be displayed and no reference waveform will be visible. The measurement mode of a stored reference channel may be displayed by pressing *Chan > Ref1 > Waveform Report.*

When the channel is saved all channel, trigger, and timebase information is saved along with the floating point data for the waveform. This information can be accessed as a report from the *Chan > Ref #* menu (Table 4-7). There are some limitations in saving math channels to reference channels. A math channel waveform which uses a reference channel cannot store the math channel back into the source reference channel. It can be saved into the other reference channel. Linear and log vertical scale and vertical center can be changed on the reference waveforms. Marker and between marker measurements can be made on reference waveforms. The exception is long term average, peak hold, and peak-to-avg ratio. These measurements imply multi-screen data capture. When in this mode on reference channels the value of long term average and peak hold is remembered and displayed from the storage of the reference waveform and never recalculated. Automatic measurements cannot be performed on reference channels.

**Table 4-37.** *Prgm > Ref Save >* **Submenu**

| Menu Item (Type) | Selections | Functions |
|---|---|---|
| *Source* (Mult. Choice) | CH1, CH2, CHM | The source for reference channels can only be channel 1, channel 2, or the math channel. A math channel which uses a reference channel in its equation cannot store the math channel into the used reference channel, but must use the other reference channel. |
| *Destination* (Mult. Choice) | REF 1, REF2 | The destination must be one of the reference channels. The reference channel can then be saved to disk. |
| *Instrument* (Action) | STORE | *Executes the store operation.* |

**Waveform Store Submenu.** This submenu (Table 4-38) allows the user to store reference waveforms to a disk file. There are up to 100 locations on each disk for waveforms. Only reference waveforms REF1 and REF2 can be saved to disk. To save waveforms from channel 1, channel 2, or channel math, the waveform must be saved as a reference waveform first.

The waveform file store command saves the waveform in floating point representation to disk with the instrument configuration at the time the waveform was saved. The reference waveform saved to disk will have a different format depending on the operating mode selected at the time of storage. The file created on disk has a unique name for each of the styles. The file report will incude the format type. The operator will only be able to recall the reference waveform files that correspond to the current operating mode of the instrument.

Once the reference waveform is recalled from disk the vertical scale and offset for linear and log modes can be changed after saving the waveform to a reference channel. The waveform is stored on the disk to a file "B4500A##.WFM" ("B4400A##.WFM" for the Model 4400A) where ## is the number in the select menu.

**Table 4-38.** *Prgm > WFM Store >* **Submenu**

| Menu Item (Type) | Selections | Functions |
|---|---|---|
| *Select* (Numeric) | 0 to 99 disk Locations | *Identifies the file to save the reference waveform.*<br><br>There are 100 (0 to 99) file locations. |
| *Source* (Mult. Choice) | REF1, REF2 | The source is the reference waveform to be stored. |
| *Destination* (Fixed) | DISK | The destination is always disk for waverform stores. |
| *Waveform* (Action) | STORE | *Executes the store operation.*<br><br>A disk must be in the disk drive and the selected file name must be unique. Existing files will not be overwritten. The user will be prompted if a file already exists. The file must first be removed using the delete function. When saving to disk wait until the disking operation is complete before removing the disk. |
| *Bytes Free* | REPORT | *Reports the number of bytes available on the diskette for storage.*<br><br>The status number is updated during a disk access. If data is stored or deleted from the disk, the bytes free report is updated. If there is no disk in the drive the window will display "NO DISK". |

**Waveform Recall Submenu.** This submenu (Table 4-39) allows the user to restore reference waveforms from a disk file. There are up to 100 locations on each disk for waveforms. Reference waveforms on disk can only be recalled into REF1 and REF2 locations.

The waveform file recall command reads the waveform in floating point format along with the instrument configuration at the time the waveform was saved as a reference waveform. The vertical scale and offset for linear and log modes can be changed after the waveform is recalled to a reference channel. The waveform is stored on the disk to a file "B4500A##.WFM" ("B4400A##.WFM" for the Model 4400A) where ## is the number in the select menu. A waveform report can display the instrument's configuration for the reference waveform stored on disk.

**Table 4-39.** *Prgm > WFM Recall >* **Submenu**

| Menu Item (Type) | Selections | Functions |
|---|---|---|
| *Select* (Numeric) | 0 to 99 disk Locations | *Identifies the file to recall as the reference waveform.*<br><br>There are 100 (0 to 99) file locations. |
| *Source* (Fixed) | DISK | The source for all waveform recalls is disk. |
| *Destination* (Mult. Choice) | REF1, REF2 | The destination for waveform recall can only be reference 1 or reference 2 channels. |
| *.WFM File* (Action) | REPORT | Reports the instrument's configuration of the selected file when the waveform was stored to disk. |
| *Waveform* (Action) | RECALL | *Executes the recall operation.*<br><br>A disk must be in the disk drive and the selected file name must exist. When recalling from disk wait until the disking operation is complete before removing the disk. |
| *Bytes Free* | REPORT | *Reports the number of bytes available on the diskette for storage.*<br><br>The status number is updated during a disk access. If data is stored or deleted from the disk, the bytes free report is updated. If there is no disk in the drive the window will display "NO DISK". |

## 4.18 DISP Key and *Disp* > Menu

The **DISP** function key activates the *Disp* > menu, which enables you to control the appearance of the monitor displays. Figures 4-38 through 4-42 and Tables 4-42 through 4-44 describe the *Disp* > menu and its submenus, as follows:

| Menu or Submenu | Figure | Table |
|---|---|---|
| *Disp* > | 4-38 | 4-40 |
| *Disp* > *Format* > | 4-39 | 4-41 |
| *Disp* > *Format* > *Trace Type* > | 4-40 | 4-41 |
| *Disp* > *Format* > *Assign Trace* > | 4-41 | 4-41 |
| *Disp* > *Format* > *Set Colors* > | 4-42 | 4-42 |

The waveform display area can be split into two windows, each capable of displaying measured or stored waveforms, and a set of time marks. You can assign either measurement channel (1 or 2) and reference trace (1 or 2) to appear in either the top or bottom window. The time marks in the windows are controlled independently, as discussed in Tables 4-11 and 4-12.

The functions in the *Disp* > *Format* > *Set Colors* menu enable you to designate the color of each element in the waveform display window, including the background, grid, markers and signal traces.

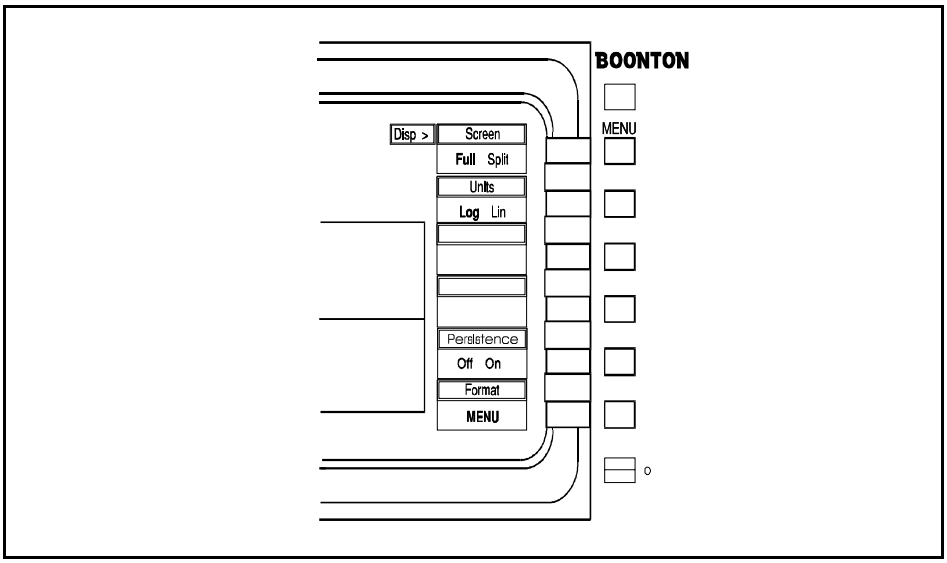


Figure 4-38. *Disp* > Menu

## Table 4-40. *Disp* > Menu

| Menu Item (Type ) | Selections | Function |
|---|---|---|
| *Screen* (Toggle) | **Full**, Split | *Sets the screen display mode.*<br><br>The full or split screen selection displays 1 or 2 windows. The split screen mode is at half vertical resolution. |
| *Units* (Toggle) | **Log** - dBm/dB<br>Lin - Watts/% | *Selects the unit of measure for the signal level readouts.* |
| *Persistence* (Toggle) | **Off**, On | *Enables or disables trace persistence.*<br>When persistence is on ("infinite"), the trace will automatically be drawn with single points (pixels) which will remain visible on the screen until cleared by pressing > *Display CLEAR*. The data points are not connected by lines when persistence is enabled and changing any measurement or display parameters that could affect the waveform will cause the accumulated points to be erased. This prevents invalid data from being drawn or remaining visible on the screen.<br><br>Note that the infinite persistence display has no function on reference channels and only operates when the instrument is in pulse measurement mode. |
| *Format* (Action) | MENU | *Allows operator to reconfigure the screen grid, trace type and assignment, the header and the display colors.* |

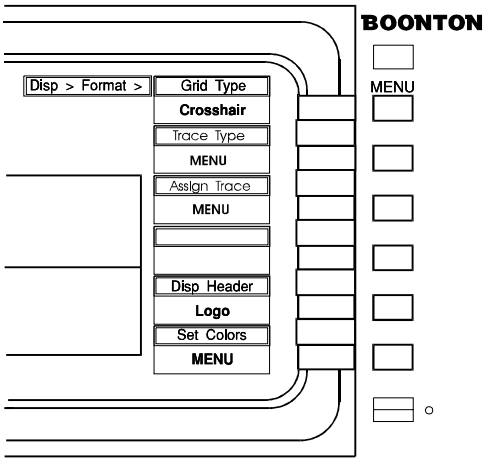


Figure 4-39. *Disp* > *Format* > Submenu

**Table 4-41.** *Disp >Format >* **Submenu**

| Menu Item (Type ) | Selections | Function |
|---|---|---|
| *Grid Type* (Mult. Choice) | **Crosshair**, Hash Marks, Grid Hash, Grid and Box | *Selects the background markings of the window display.*<br><br>The reference grid in the display area makes it easier to make precise measurements. The grid type should be chosen to be compatible with the trace characteristics and units of measure. In selecting the grid type, it may be necessary also to consider any requirements that apply to printouts you may wish to make using hardcopy output. To select the desired grid, press the “Grid Type” menu key until the desired background markings appear in the display area. |
| *Trace Type* (Action) | MENU | Accesses the *Disp > Format > Trace Type* submenu. See Figure 4-40.<br><br>Use the *Disp > Format > Trace Type* submenu to specify the display format for the "CH 1," "CH 2, " "CH Math," "Ref 1," or "Ref 2" waveform traces. Each of these waveforms may be displayed as a solid or dotted line, or turned off. Press the menu key opposite the function you wish to specify until the desired line type appears. When the waveform is turned off, data is still being captured, but it is not displayed. This is useful, for example, when the Math Channel is being displayed. |
| *Assign Trace* (Action) | MENU | Accesses the *Disp > Format > Assign Trace* submenu. See Figure 4-41.<br><br>Each selection in the Disp > Format > Assign Trace menu enables you to assign a function to a split-screen window. In the example of Figure 4-41, measurement Channel 1 is assigned to the top window of the split-screen display and the Reference 1 trace is assigned to the bottom. This would be a useful arrangement to observe the effects of signal processing. In this example, the Ref 1 trace could be used to record the signal before processing, for comparison to the postprocessed signal in the measurement channel. Alternatively, measurement Channels 1 and 2 could be assigned to the top and bottom windows, respectively, for comparison purposes. Many such combinations are available for comparing "before and after" waveforms in split-screen windows.<br><br>To assign functions to windows, press the menu key opposite each function name (CH 1, CH 2, CH Math, Ref 1 or Ref 2) until the desired window location ("Top" or "Bottom") appears.<br><br>In the full-screen mode, the window assignments are ignored and all traces are displayed in the full-screen window. |
| *Disp Header* (Mult. Choice) | **Logo**, Time/Date, Sens Temp, and Blank (space) | *Selects which item will appear in the header field of the display.*<br><br>You can display any one of the items in the header field: “Boonton” (Logo), the date and time, or the sensor temperature (Celsius scale). You may also choose to leave the space blank.<br><br>Press the *Disp > Format > Disp Header* menu key until the desired function appears on the header line. |

**Table 4-41.** *Disp >Format >* **Submenu** *(continued)*

| Menu Item (Type ) | Selections | Function |
|---|---|---|
| *Set Colors* (Action) | MENU | Accesses the *Disp > Format > Set Colors* submenu. See Figure 4-42 and Table 4-44. |

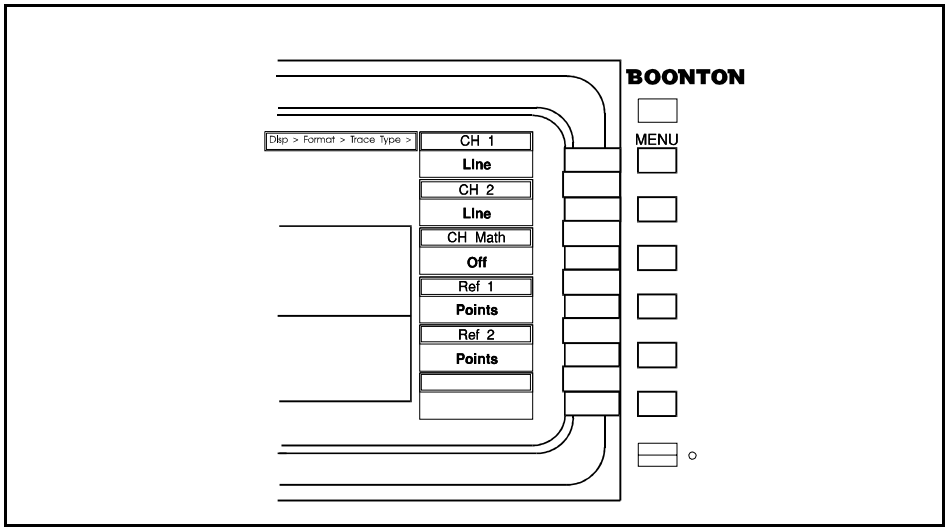


Figure 4-40. *Disp > Format>Trace Type >* Submenu

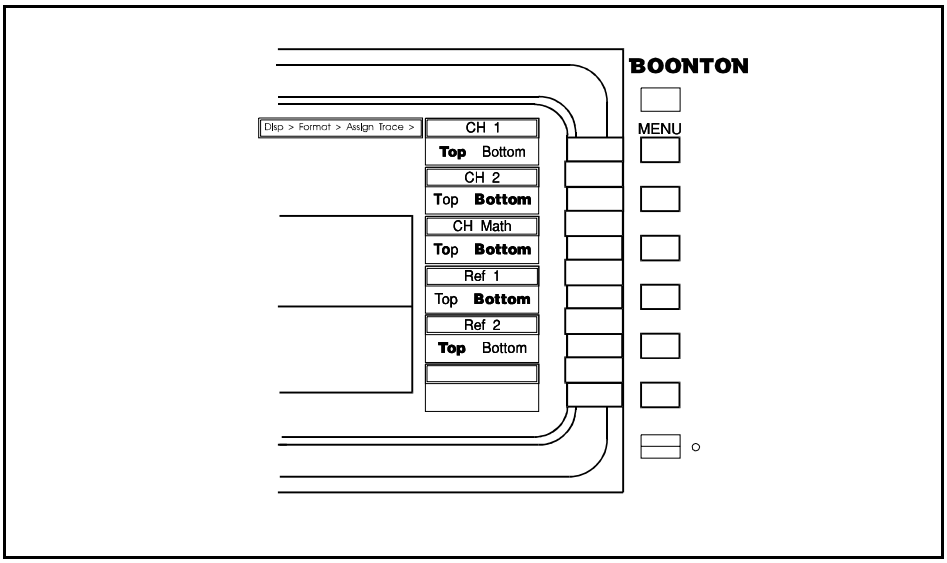


Figure 4-41. *Disp > Format>Assign Trace >* Submenu

## Set Colors

You may color the various elements of the display for photographic purposes, or for any other reason. Color choices can be solid Red, Green, Blue, or mixtures of these. Set the color for a display element by selecting it in the *Disp > Format > Set Colors > Item Color* window and adjust the mix of Red, Green and Blue. See Table 4-42.

Color selections are stored in non-volatile RAM and are retained when the instrument is turned off. They are not reset by operation of the **INIT** function key and are not included in the *Prgm > Instrument >* "Store" and "Recall" parameters. (See Subsection 4-17.) Reloading the Model4400A/4500A control software or selecting *Disp > Format > Set Color > Init Colors* will reinitialize the color selections to the factory default settings.

## Color Conventions

For color assignment purposes, each element of the monitor display is assigned an element number. The Priority Message, Status Line, Path Message, selection box outline, etc., are all display elements and are assigned numerical equivalents. See Table 4-44. The waveform display window is a special case, and all the elements in it are assigned numbers that equal powers of 2 (1, 2, 4,... 128), to speed waveform display processing. Display elements outside the waveform window are assigned element numbers greater than 128.

The intersection of a waveform and a grid element or marker is considered a display element and is assigned an element number equal to the sum of the overlapping items. Thus the intersection of the Channel 1 waveform (element #4) and the grid (element #1) is assigned element #5. The intersection of Channel 1 (#4) and Channel 2 (#8) waveforms is assigned element #12).

Intersections of display element are color-set at the factory according to the following convention:

Waveform-grid intersections are assigned the color of the waveform.

Waveform-waveform intersections are white.

**Table 4-42.** *Disp >Format >Set Colors >* **Submenu**

| Menu Item (Type) | Selections | Function |
|---|---|---|
| *Item Color* (Mult. Choice) | 253 Items (See discussion) | *Selects the background markings of the window display.*<br><br>To select or adjust the color of any of the 253 items on the screen, press the *Disp > Format > Set Color > Item Color* menu key to activate this window. Next, use any of the data entry controls to select the item to be color- adjusted. To locate the item you wish to color, consult Table 4-45 for its numeric equivalent. |
| *Red, Green, Blue* (Numeric) | 0 to 252 | *Selects the mixture of primary colors in each display element.*<br><br>To indicate the color or mix of colors for the selected display element, press one of the color keys and use the data entry controls to set its intensity value (from 0 to 252). Repeat this process for the other two colors. To indicate a solid (unmixed) color, assign an intensity of 252 to it and assign "0" to the other two colors. Note the color values must be even multiples of 4. |
| *Init Colors* | INIT | *Resets all colors to factory default settings*<br><br>Press the *Disp > Format > Set Color > INIT Colors* menu key to reset the colors for all display items to their original factory settings. The bus command for Init Colors is NEWCOLOR (see Table 5-2). |

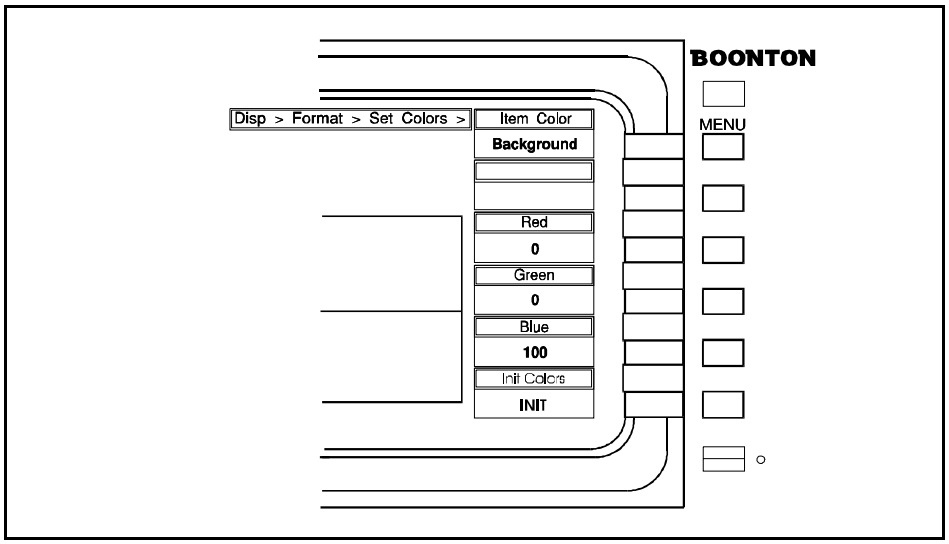


Figure 4-42. *Disp >Format > Set Colors >* Submenu

## Table 4-43. Numeric Equivalent of Display Items

| Number | Item | Pen * Designation | Definition |
|---|---|---|---|
| 0 | Background | 0 | The basic color of the display onto which all other graphic information is superimposed. |
| 1 | Grid | 1 | The grid upon which the measurement waveform is displayed . |
| 2 | Time Markers | 6 | The marker lines that are oriented vertically on the graph. They are used to indicate the point along the graph's horizontal axis at which the measurement is made. |
| 4 | CH 1 | 2 | The color of the waveform and the marker measurements displayed as Channel 1. |
| 8 | CH 2 | 3 | The color of the waveform and the marker measurements displayed as Channel 2. |
| 16 | CH Math | 4 | The color of the waveform and the marker measurements displayed as Channel Math. |
| 32 | Ref 1 | 5 | The color of the waveform and the marker measurements displayed as Reference Channel 1. |
| 64 | Ref 2 | 6 | The color of the waveform and the marker measurements displayed as Reference Channel 2. |
| 128 | Reference Lines | 6 | The marker lines that are oriented horizontally on the grid and are used to indicate the minimum or maximum amplitude of the waveform. |
| 224 | Status Message | 1 | The color of the message that appears in the Message field. |
| 225 | Error Message | 4 | The color of the message that appears in the Error field. |
| 226 | Path Message | 1 | The color of the Pathname. |
| 227 | Priority Message | 2 | The color of the message that appears in the Priority Message field. |
| 241 | Box Low | 1 | The color of the outline of the menu boxes. |
| 242 | Box High | 5 | The highlight color of the menu box that is selected for data entry. |
| 243 | Label Back | 0 | The background color of the label area of the menu boxes, upon which the menu labels are displayed. This color is superimposed upon the background color. |

* Pen assignment applies only to plotting output.

**Table 4-43. Numeric Equivalent of Display Items** *(continued)*

| Number | Item | Pen * Designation | Definition |
|---|---|---|---|
| 244 | Menu Label | 1 | The color of the labels appearing at the top of each of the menu boxes. |
| 245 | Data Back | 0 | The background color of the data entry area of the menu boxes, upon which the data are displayed. This color is superimposed upon the background color. |
| 246 | Menu Data | 3 | The color of the data appearing in the data entry area of the menu boxes. |
| 247 | Data Low | 0 | The alternate color of the labels appearing in the menu boxes. For example: When the menu label for a toggled function such as Channel "Off/On" is changed from "Off" to "On," the color of the "On area of the label is set using Menu Label; the "Off" area is set using Data Low. |
| 248 | Help Box | 1 | The box drawn around help messages. |
| 249 | Text | 1 | The color of the Parameter Field above the graph. |

* Pen assignment applies only to plotting output.

**Note**

For item numbers not listed in Table 4-43, see the previous discussion of coloring conventions.

This concludes the discussion of the function keys that control Model 4400A/4500A operation. You will quickly become familiar with most of their characteristics through continued use. For the less-frequently used keys, consult the appropriate sections of this manual to avoid measurement errors or loss of valuable data.

## 4.19 Automatic Operation

The Model 4400A/4500A can make many automatic measurements for the operator. The instrument makes different measurements depending on the operating mode. Pressing the TEXT system key will display all of the available automatic measurements.

When in the pulse power (*Pwr* ⇨) mode the instrument can make the following list of measurements on channels 1 and 2. Note that if an external trigger signal is being displayed, only the time measurements are valid. A sample display is illustrated in Figure 4-43.

| | |
|---|---|
| Pulse width | Peak power |
| Risetime | Pulse power |
| Falltime | Overshoot |
| Period | Average power |
| Pulse repetition frequency | Top amplitude |
| Duty cycle | Bottom amplitude |
| Offtime | Delay between CH 1 and CH 2 |

The information displayed in the text report is based on the data captured in the graph mode. Parameters such as pulse width, period, and repetition frequency, can only be displayed if there are a sufficient number of pulse transitions on the display. For pulse width, there must be at least two pulse transitions; for pulse period and repetition frequency there must be three. If there are an insufficient number of transitions to determine one of these parameters, the display will show "--.-" instead of a numeric value. Rise and fall times are most accurately measured when the instrument's timebase is set so that each transition takes at least one full display division.

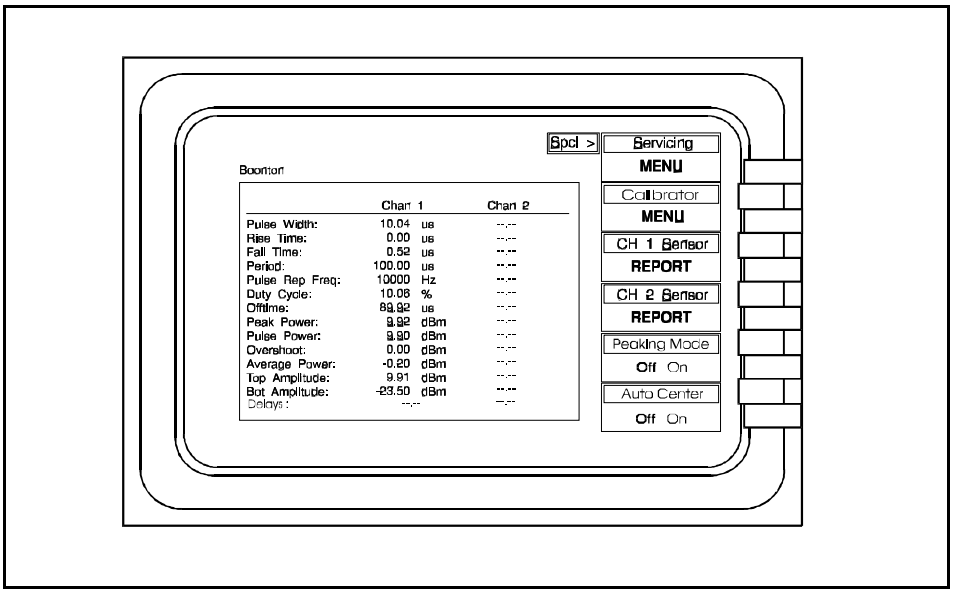


Figure 4-43. Text Mode Display

When in the statistical (Stat ⇨) mode the Model 4500A will measure eleven parameters for channels 1 and 2 and report four global configuration parameters. A sample display is illustrated in Figure 4-44.

| | |
|---|---|
| Peak Power | Total Points |
| Average Power | Tolerance |
| Peak to Average Power | Confidence Band |
| Dynamic Range | Marker 1 & 2 Position Reading and Delta |
| Minimum Power | Reference 1 & 2 Position Reading and Delta |
| Total Time | |

When the readings are invalid the numeric display will be filled with dashes “--.-”. Over range will be indicated by up arrows "^" and under range by underlines "_ _ _ ".

All of these values are available over the IEEE-488 bus.

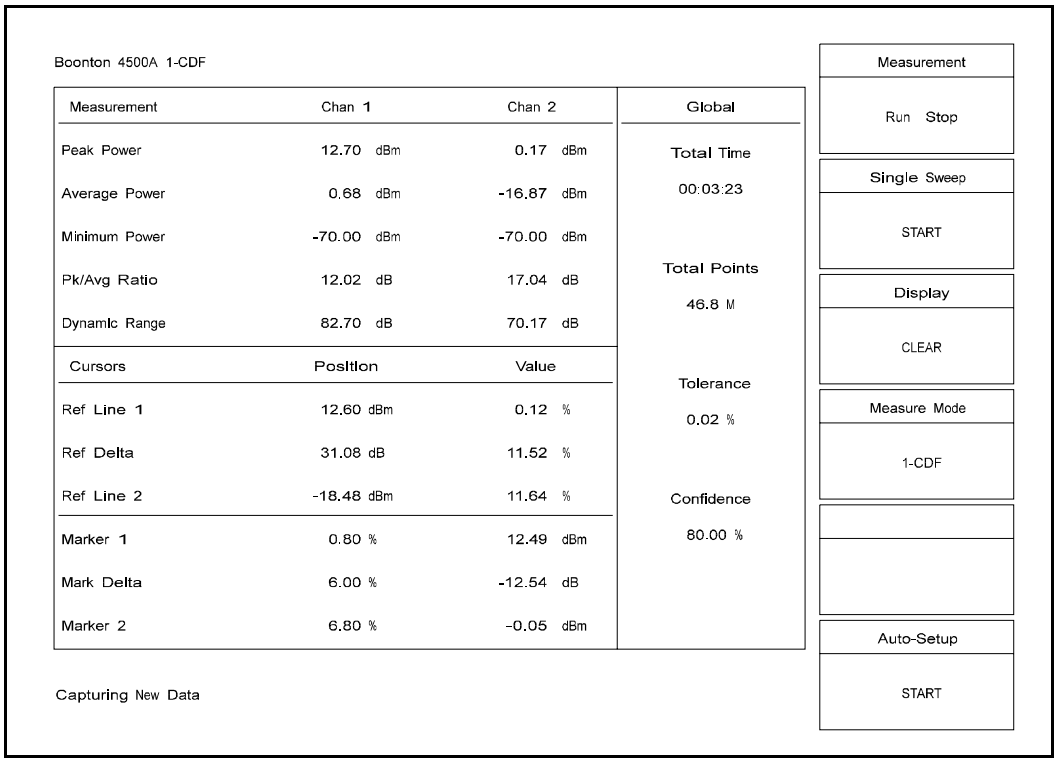


Figure 4-44.
Text Mode Display
*(when in Stat ⇨ mode)*

## 4.20 Advanced Procedures

This section presents fundamental operating procedures for the Model 4400A/4500A. These procedures enable you to perform all the routine measurements available in the Local mode. Section **5 Remote Operation** covers the commands and procedures used to operate the instrument remotely via the IEEE-488 bus. **Section 6 Application Notes** provides general information on power measurements, automatic measurement techniques, and error calculations. **Section 7 Maintenance** covers software upgrades, calibration and performance verification. **Appendix B Plotter Operation** instructs you on the connection, setup, and operation of hardcopy output devices.

# 5

# Remote Operation

All of the Model 4400A/4500A front panel operations, except ON/SBY, can be remotely controlled using an IEEE-488 interface controller. IEEE-488 is a hardware standard for the communication and handshaking across an 8-bit parallel bus connecting a controller and up to fifteen instruments.

This section presents procedures for setting up remote operations and describes the Listen and Talk mode functions.

## 5.1 Setup for Remote Operation

Table 5-1 lists the procedures you follow to set up the instrument for remote operation. Refer to Figure 4-28 and Table 4-22.

**Table 5-1. Setup for Remote Operation**

| Function | Procedure |
|---|---|
| *Setting the Bus Address* | Press *Util* > *IEEE-488* > *Bus Setup* > to set the IEEE-488 bus address (MLTA). The current bus address will be displayed in the *Address* window. Use the data entry controls to enter the desired address, which may be any number from 0 to 30, inclusive. A secondary address is not implemented. |
| *Setting the End-of- String Character* | To set the IEEE-488 end-of-string characters, press the *Util* > *IEEE-488* > *Bus Setup* > menu key. The current end-of-string characters for the Listen and Talk modes will be displayed in the *Listen Term* and *Talk Term* entry windows, respectively. Press the menu key corresponding to the mode(s) you wish to change and use the data entry controls to specify the terminating character.<br><br>The terminating characters are independently settable for the Listen and Talk strings. The instrument always responds to EOI when listening on the bus, and will activate the EOI line when the *EOI on Talk* function is enabled, as explained in Table 4-22. |
| *Entering the Remote Mode* | The instrument is put in the remote mode by addressing it as a listener, with the remote enable (REN) bus signal true. In the remote state, the front panel controls are disabled, except for the **ESC/LOCAL** key; on the rear panel, the Power ON/OFF switch remains active. When the instrument becomes remote over bus it automatically returns to the top level menu. The REM status annunciator is illuminated. |
| *Returning to Local Mode* | To return to the local mode press the **ESC/LOCAL** function key. The instrument will also return to local if the Go-to-Local (GTL) bus command is sent by the controller, or the remote enable (REN) line is set false. |

**Note**

The instrument should be placed in the remote mode before commands are sent on the IEEE-488 bus.

## 5.2 Listen Mode

### Program Function

Each front panel key is assigned a program mnemonic. For bus operation, functions that appear as toggles on the local control menus are separated into individual commands. Other program mnemonics are used for functions that apply only to remote operation. Table 5-2 lists all the Listen mode (bus) mnemonics.

*Note that some of these mnemonics are supported only by the Model 4500A. If a mnemonic indicates Pwr ⇨ or has no mode notation, it is supported by both the Model 4400A and Model 4500A. If the mnemonic function pertains only to statistical mode or has only the Stat ⇨ notation, it is not supported by the Model 4400A.*

### Number Formatting

The number formatting rules are:

a. Either fixed or floating formats are accepted.

b. The optional "+" or "-" sign may precede the mantissa and/or the exponent.

c. The optional radix point may appear at any position within the mantissa. A radix point in the exponent is ignored.

d. The optional "E" for exponent may be upper or lower case.

e. The ASCII character ";" (3Bh) is considered the command delimiter. The ASCII characters " " (20h) and "," (2Ch) are considered numeric delimiters.

### Data String Format

The data string formats conform to the following:

a. The programming sequence is in natural order; that is, a function mnemonic is sent first followed by the argument, if appropriate.

b. A primary function mnemonic sent without a following argument will make the specified function active.

c. The data string may not exceed 2000 characters and may be terminated with LF, CR, and/or EOI.

d. Interpretation of the data string does not begin until the end-of-string character is received.

e. All commands transmitted over the bus must be separated by a delimiter. Valid delimiters are a blank space, comma (,), semicolon (;), or colon (:).

**Data String Errors**

Errors are detected during interpretation. The occurrence of an error will display the error code if the display is enabled, and will set SRQ true if SRQ is enabled. The error and SRQ can be cleared by a serial poll, a status request (MTS), or a "clear" error instruction (*CLR). No new input can be processed until an existing error is cleared.

**Table 5-2 Model 4400A/4500A Listen Mode Bus Mnemonics**

| Code | Arg | [Equivalent Keystrokes]<br>Function |
|---|---|---|
| **A*B** | --- | [*Pwr ⇨ CH Math > Expression > Operator : A*B*]<br>When in the linear mode, this command will cause the channel assigned to argument A to be multiplied by the channel assigned to argument B. |
| **A+B** | --- | [*Pwr ⇨ CH Math > Expression > Operator* : + ]<br>When in the log mode, this command places the math channel into the sum mode, adding the arguments A + B. The source of arguments A and B can be set to CH 1, CH 2, Ref 1, or Ref 2, as required. |
| **A-B** | --- | [*CH Math > Expression > Operator* : - ]<br>When in the log mode, this command places the math channel to the subtraction mode, subtracting arguments A - B. The source of argument A and B can be set to CH 1, CH 2, Ref 1, or Ref 2 as required. |
| **A/B** | --- | [*Pwr ⇨ CH Math > Expression > Operator : A/B* ]<br>When in the linear mode, this command will cause the channel assigned to argument A to be divided by the channel assigned to argument B. |
| **A=CH1** | --- | [*CH Math > Expression > Argument A : CH1* ]<br>Sets the source of the A argument to CH 1 for channel math. |
| **A=CH2** | --- | [*Pwr ⇨ CH Math > Expression > Argument A : CH2 ]*<br>Sets the source of the A argument to CH 2 for channel math. |
| **A=REF1** | --- | [*CH Math > Expression > Argument A : Ref1* ]<br>Sets the source of the A argument to Ref 1 for channel math. |
| **A=REF2** | --- | [*CH Math > Expression > Argument A : Ref2* ]<br>Sets the source of the A argument to Ref 2 for channel math. |
| **AUTOCAL** | --- | [*Chan # > Calibration > Autocal* ]<br>The sensor of the current selected channel must be connected to the internal calibrator or an error will occur. The *AutoCal* generates new calibration data for both the CW and the pulse power measurements. Error status should always be checked after *AutoCal* to verify successful calibration. |
| **AUTOSET** | --- | [*Pwr ⇨ > Auto-setup: START*]<br>Auto setup is perfromed by the instrument to select a vertical scale, vertical offset, timebase, trigger level and trigger holdoff from channel 1 and 2. |
| **AVG** | ### | [*Pwr ⇨ Chan # > Extensions > Averaging : ###* ]<br>(1 to 10000) sample length<br>Averages the specified number of samples for each measurement of the currently selected channel, either CH 1 or CH 2. |

## Table 5-2 Model 4400A/4500A Listen Mode Bus Mnemonics *(continued)*

| Code | Arg | [Equivalent Keystrokes]<br>Function |
|---|---|---|
| **AVERAGE** | **###** | [*Pwr* ⇨ *Chan # > Extensions > Averaging* : *###* ]<br>(1 to 10000) sample length<br>Equivalent to the AVG command. Averaging is applied to each measurement on the currently selected channel, either CH 1 or CH 2. |
| **B=CH1** | **---** | [*Pwr* ⇨ *CH Math > Expression > Argument B : CH1* ]<br>Sets the source of the B argument to CH 1 for channel math. |
| **B=CH2** | **---** | [*CH Math > Expression > Argument B : CH2* ]<br>Sets the source of the B argument to CH 2 for channel math. |
| **B=REF1** | **---** | [*CH Math > Expression > Argument B : Ref1* ]<br>Sets the source of the B argument to Ref 1 for channel math. |
| **B=REF2** | **---** | [*CH Math > Expression > Argument B : Ref2* ]<br>Sets the source of the B argument to Ref 2 for channel math. |
| **BLUE** | **###** | [*Disp > Format > Set Colors > Blue : ###* ]<br>(0 to 255)<br>Sets the intensity of the blue component of the display; affects the color and brightness of the selected color item. See **COLOR**. |
| **BOTWIND** | **---** | [*Mark > Window : Bottom* ]<br>Sets the markers to the bottom window in the split display. |
| **BWLOW** | **---** | [*Chan # > Extensions > Video BW : Low* ]<br>Places the sensor on the currently selected channel into the low bandwidth mode. Affects the currently selected channel. |
| **BWHIGH** | **---** | [*Chan # > Extensions > Video BW : High* ]<br>Places the sensor into the high bandwidth mode. Affects the currently selected channel. |
| **CAL10%** | **---** | [*Spcl > Cal > Pulse > Duty Cycle : 10%* ]<br>Sets the duty cycle of the calibrator to 10%. |
| **CAL20%** | **---** | [*Spcl > Cal > Pulse > Duty Cycle : 20%* ]<br>Sets the duty cycle of the calibrator to 20%. |
| **CAL30%** | **--** | [*Spcl > Cal > Pulse > Duty Cycle : 30%* ]<br>Sets the duty cycle of the calibrator to 30%. |
| **CAL40%** | **---** | [*Spcl > Cal > Pulse > Duty Cycle : 40%* ]<br>Sets the duty cycle of the calibrator to 40%. |
| **CAL50%** | **---** | [*Spcl > Cal > Pulse > Duty Cycle : 50%* ]<br>Sets the duty cycle of the calibrator to 50%. |
| **CAL1MS** | **---** | [*Spcl > Cal > Pulse > Pulse Period : 1ms* ]<br>Sets the pulse period of the calibrator to 1 ms. |

## Table 5-2 Model 4400A/4500A Listen Mode Bus Mnemonics *(continued)*

| Code | Arg | [Equivalent Keystrokes]<br>Function |
|---|---|---|
| **CAL10MS** | --- | [*Spcl > Cal > Pulse > Pulse Period : 10ms* ]<br>Sets the pulse period of the calibrator to 10 ms. |
| **CAL100US** | --- | [*Spcl > Cal > Pulse > Pulse Period : 100* µs ]<br>Sets the pulse period of the calibrator to 100 µs. |
| **CALCW** | --- | [*Spcl > Cal > Cal Mode : CW* ]<br>Sets the calibrator to CW output. |
| **CALEDGE +** | --- | [*Spcl > Cal > Pulse > Polarity : +* ]<br>When the calibrator edge is assigned to the positive edge, the calibrator is in the pulse mode and the calibrator output will follow the internal or external trigger signal. |
| **CALEDGE -** | --- | [*Spcl > Cal > Pulse > Polarity : -* ]<br>When the calibrator edge is assigned to the negative edge, the calibrator is in the pulse mode and the calibrator output will be inverted from the internal or external trigger signal. |
| **CALEXT** | --- | [*Spcl > Cal > Pulse > Source : Ext* ]<br>Sets the source for generating the calibrator output pulse to external. |
| **CALINT** | --- | [*Spcl > Cal > Pulse > Source : Int* ]<br>Sets the source for generating the calibrator output pulse to internal. |
| **CALLEVEL** | ### | [*Spcl > Cal > Set Level : ###* ]<br>(-40 to +20) dBm in .1 dBm steps<br>Sets the calibrator output level. |
| **CALLIMIT** | ### | [*Spcl > Cal > Max Power : ###* ]<br>(-40 to +20) dBm in .1 dBm steps<br>Sets the maximum power level for the calibrator output. |
| **CALON** | --- | [*Spcl > Cal > Cal Output : ON* ]<br>Sets the calibrator output ON. |
| **CALOFF** | --- | [*Spcl > Cal > Cal Output : OFF* ]<br>Sets the calibrator output OFF. |
| **CALPULSE** | --- | [*Spcl > Cal > Cal Mode : Pulse* ]<br>Sets the calibrator to the pulse output mode. |
| **CALSTEP** | ### | [*Spcl > Cal > Extensions > Level Step: ###*] (0.1 to 60 dBm in .1 dBm steps)<br>This function sets the size of the power steps used for the knob and arrow keys when setting the Cal Level. |
| **CFDB** | ### | [*Chan # > Extensions > CF in dB : ###* ]<br>(-3.00 to +3.00) Cal factor in DB<br>Enter correction factor in dB. Affects currently selected channel. |
| **CH1** | --- | [*Chan # > Select : CH 1* ]<br>Selects channel 1 as the channel that all following commands affect. |

## Table 5-2 Model 4400A/4500A Listen Mode Bus Mnemonics *(continued)*

| Code | Arg | [Equivalent Keystrokes]<br>Function |
|---|---|---|
| **CH1 - CH2** | --- | [*CH Math > Expression* : *CH 1 - CH 2* ]<br>Selects CH1 minus CH2. |
| **CH2** | --- | [*Chan # > Select : CH 2* ]<br>Selects channel 2 as the channel that all following commands affect. |
| **CH2 - CH1** | --- | [*CH Math > Expression : CH 2 - CH 1* ]<br>Selects CH 2 minus CH 1. |
| **CHM** | --- | [*Chan # > Select CH : Math* ]<br>Select the Math Channel as the channel that all following commands affect. |
| **CHON** | --- | [*Chan # > Channel : ON* ]<br>Enables the currently selected channel allowing measurements to be made. |
| **CHOFF** | --- | [*Chan # > Channel : OFF* ]<br>Disables the currently selected channel. Related to **CHON**. |
| **CLRSCR** | --- | [ *> Display : Clear* ]<br>Clears all measurement data out of internal buffers and the display on both measurement channels. Used on stopped channels or to clear data out of long averaging conditions; does not clear errors. See ***CLS**. |
| **COLOR** | ### | [*Disp > Format > Set Colors > Item Color : ###* ]<br>(0 to 255)<br>Selects the item number that the color changes will affect. Each item is a trace, a menu, a block, or text which are differentiated by color on the display. See Table 4-44 Numerical Equivalency of Display Items. |
| **CON80%** | --- | [*Stat ⇨ Meas > Confidence Band: 80%*]<br>This command sets the confidence band to 80%. This confidence band is used to calculate the statistical tolerance of the readings based on the number of samples captured. |
| **CON85%** | --- | [*Stat ⇨ Meas > Confidence Band: 85%*]<br>This command sets the confidence band to 85%. See **CON80%** function description. |
| **CON90%** | --- | [*Stat ⇨ Meas > Confidence Band: 90%*]<br>This command sets the confidence band to 90%. See **CON80%** function description. |
| **CON95%** | --- | [*Stat ⇨ Meas > Confidence Band: 95%*]<br>This command sets the confidence band to 95%. See **CON80%** function description. |
| **CON99%** | --- | [*Stat ⇨ Meas > Confidence Band: 99%*]<br>This command sets the confidence band to 99%. See **CON80%** function description. |
| **CWON** | --- | [*Pwr ⇨ Chan # > Extensions > Measure Mode : CW* ]<br>Sets the instrument to CW measurement mode. |
| **CWOFF** | --- | [*Pwr ⇨ Chan # > Extensions > Measure Mode : Pulse*]<br>Sets the instruments to the pulse mode. |

## Table 5-2 Model 4400A/4500A Listen Mode Bus Mnemonics *(continued)*

| Code | Arg | [Equivalent Keystrokes]<br>Function |
|---|---|---|
| **DAY** | ### | [*Util > Clock > Day of Month : ###* ]<br>(1 to 31)<br>Enters new day of the month for the real time clock. |
| **DISTAL** | ### | [*Pwr ⇨ Meas > Define Pulse > Distal : ###* ]<br>(1 to 99) Percent, in 0.01% increments.<br>Sets the distal parameter for the risetime calculation. |
| **DSPWR** | | [*Pwr ⇨ Chan # > Extensions > Display : Pwr* ]<br>Changes the waveform display mode to display the power channel instead of the external trigger channel. |
| **DSTRIG** | | [*Pwr ⇨ Chan # > Extensions > Display : Trig* ]<br>Changes the waveform display mode to display the external trigger channel instead of the power channel. |
| **ESC** | --- | [**ESC** Key ]<br>Returns the display to the top level menu.<br>When instrument becomes remote over bus, it automatically returns to the top level menu. |
| **FILENO** | --- | [*Used in all file select menus*]<br>FILE Number - Filename select - the suffix to the filename B4400A## (B4500A## for Model 4500A). Range 0 to 99. Used for storing and recalled data to and from the disk. |
| **FIXCAL** | --- | [*Chan # > Calibration > Fixed Cal : Start* ]<br>Performs a single point calibration to an external source at 0 dBm. This enables traceability improvement by using a better specified source at frequencies as low as 30 MHz. It uses the currently selected frequency for correction data. |
| **FREQ** | ### | [*Meas > Freq CH# : ###*]<br>(0 to 40 GHz)<br>Sets the operating frequency for the selected channel. Note the frequency entered must be in Hertz, but will be rounded to the nearest .01 GHz for use in sensor frequency correction. Use scientific notation to maintain an acceptable number of digits. The acceptable range of frequencies is sensor dependent. Entering a frequency of 0 will cancel sensor frequency correction factors. Ex: **FREQ 18.3E9** sets the channel's frequency to 18.3 GHz. |
| **FREQBOTH** | --- | [*Meas > Freq Group : Both* ]<br>Select the frequency entry mode where both channels are assigned to the same frequency. |
| **FREQEACH** | --- | [*Meas > Freq Group : Each* ]<br>Select the frequency entry mode where each channel can be assigned to an independent frequency. The individual frequency assignments for the each assignments are independent of the frequency assignment in the frequency both mode. |
| **FREQCH1** | ### | [*Meas > Freq CH1 : ###* ]<br>Set the frequency of operation of channel 1 in the frequency each mode or both channels in the frequency both mode. See **FREQ** function description. |
| **FREQCH2** | ### | [ *Meas > Freq CH2 : ###* ]<br>Set the frequency of operation of channel 2 in the frequency each mode or both channels in the frequency both mode. See **FREQ** function description. |

## Table 5-2 Model 4400A/4500A Listen Mode Bus Mnemonics *(continued)*

| Code | Arg | [Equivalent Keystrokes]<br>Function |
|---|---|---|
| **G&TOFF** | --- | [*Util > Plotter > Graph & Text : Off* ]<br>Select the printer output to record the current screen image. |
| **G&TON** | --- | [*Util > Plotter > Graph & Text : On* ]<br>Select the printer output to record the graph screen and the text screen on one page. |
| **GRAPH** | --- | [ **TEXT/GRAPH** Key ]<br>Places the display into the graphics mode if the display is in either the automatic measurement (Text) or Help mode. |
| **GREEN** | ### | [*Disp > Format > Set Colors > Green : ###* ]<br>(0 to 255)<br>Sets the intensity of the green component of the display; affects the color and brightness of the selected color item. See **COLOR.** |
| **GRID** | --- | [*Disp > Format > Grid Type : Grid ]*<br>Sets the display to box, with grid and no crosshairs. |
| **GRIDCH** | --- | [*Disp > Format > Grid Type : Crosshair* ]<br>Sets the display to box, crosshairs and no grid. |
| **GRIDBOX** | --- | [*Disp > Format > Grid Type : Box* ]<br>Sets the display grid for the box outline. |
| **GRIDGH** | --- | [*Disp > Format > Grid Type : Grid Hash* ]<br>Sets the display to box, with grid and crosshairs. |
| **GRIDHM** | --- | [*Disp > Format > Grid Type : Hash Marks* ]<br>Sets the display for the box with peripheral hash marks. |
| **HDBLANK** | --- | [*Disp > Format > Disp Header : Blank* ]<br>Sets the display header off. |
| **HDDATE** | --- | [*Disp > Format > Disp Header : Time/Date* ]<br>Sets the display header to show the date and time. |
| **HDLOGO** | --- | [*Disp > Format > Disp Header : Logo* ]<br>Sets the display header to show BOONTON logo and current operating mode. |
| **HDTEMP** | --- | [*Disp > Format > Disp Header : Temp* ]<br>Sets the display to show the temperature of the sensors. |
| **HELPON** | --- | [**HELP** Key ]<br>Sets the display to the Help mode. |
| **HELPOFF** | --- | [**HELP** Key ]<br>Disables the Help mode and returns to graphics or text mode. |
| **HOLDOFF** | ### | [*Pwr ⇨ Trig > HoldOff : ###* ]<br>(0 to 60000) µs<br>Set the trigger HoldOff time. This is the time interval after a valid trigger event during which the instrument rearms the trigger. |
| **HOUR** | ### | [*Util > Clock > Hour : ###* ]<br>(0 to 23)<br>Change the hour entry of the realtime clock. |

## Table 5-2 Model 4400A/4500A Listen Mode Bus Mnemonics *(continued)*

| Code | Arg | [Equivalent Keystrokes]<br>Function |
|---|---|---|
| **INSNVRAM** | --- | [*Prgm > Instr Store > Destination: NVRAM*] *or* [*Prgm > Instr Recall > Source: NVRAM*]<br>Sets the Instrument setup store and recall destination and source for non-volatile memory. |
| **INSDISK** | --- | [*Prgm > Instr Store > Destination: DISK*] or [*Prgm > Instr Recall > Source: DISK*]<br>Sets the Instrument setup store and recall destination and source for disk access. |
| **INSRCL** | --- | [*Prgm > Instr Recall > Instrument Recall*]<br>Instrument recall reads and configures the instrument from a setup file. Note that this command recalls the setup from a floppy disk file only, even if the **INSNVRAM** has been issued. The file sequence number (filename) for the recall operation must be set with the **FILENO** command. Note that **INSRCL** must be the last command issued before the listen string is terminated. The listen buffer is flushed when the instrument setup is recalled, and any commands left in the buffer will not be executed. |
| **INSSAV** | --- | [*Prgm > Instr Store > Instrument Store*]<br>Instrument store builds an instrument setup file and saves to disk. Note that this command stores the setup to a floppy disk file only, even if the **INSNVRAM** has been issued. The file sequence number (filename) for the save operation must first be set with the **FILENO** command. |
| **LABELOFF** | --- | [*Util > Plotter > Plot Label : Off* ---]<br>Turns the four plot labels on the graph display off. |
| **LABELON** | --- | [*Util > Plotter > Plot Label : On* ---]<br>Turns the four plot labels on the graph display on. |
| **LIN** | --- | [*Disp > Units : Lin* --- ]<br>Changes the display mode placing the measurement markers into linear representation of the power measured at the marker. |
| **LOCATION** | **###** | [*Prgm > Instr Store >Select: ###* ] or [*Prgm > Instr Recall > Select: ###*]<br>Sets the location for storing and recalling the instrument setup to and from NVRAM. If saving to or recalling from the floppy disk, see the **FILENO** command. |
| **LOG** | --- | [*Disp > Units : Log* ]<br>Sets the measurement markers into logarithmic representation of the power measured at the marker. |
| **M% 1** | --- | [Stat ➪ *Mark > % Mark 1* : ###]<br>When the instrument is in Stat Mode, this command sets marker 1 to a location on the X-axis. The X-axis marker units are shown in percent. The range of values is 0 to 100% with two decimal places of resolution.<br>Markers are limited to screen extents. Marker values outside screen extents are limited to screen extents. However, the **TKMKT** command can be used to read the actual marker positions. |
| **M% 2** | --- | [Stat ➪ *Mark > % Mark 2* : ###]<br>When the instrument is in Stat Mode, this command sets marker 2 to a location on the X-axis. The X-axis marker units are shown in percent. The range of values is 0 to 100% with two decimal places of resolution.<br>Markers are limited to screen extents. Marker values outside screen extents are limited to screen extents. However, the **TKMKT** command can be used to read the actual marker positions. |

## Table 5-2 Model 4400A/4500A Listen Mode Bus Mnemonics *(continued)*

| Code | Arg | [Equivalent Keystrokes] Function |
|---|---|---|
| **MAX-MIN** | --- | [*Pwr ⇨ Mark > Extensions > Mk Math : Max-Min* ]<br>Assign the marker mode to Max-Min for the center marker window in the marker ratio mode. In addition, the left marker window is assigned to the minimum power when in the both marker mode. The right marker window is assigned to the maximum power when in the both marker mode. |
| **MIN-MAX** | --- | [*Pwr ⇨ Mark > Extensions > Mk Math : Min-Max* ]<br>Assign the marker mode to Min-Max for the center marker window in the marker ratio mode. In addition, the left marker window is assigned to the minimum power when in the both marker mode. The right marker window is assigned to the maximum power when in the both marker mode. |
| **MESIAL** | ### | [*Pwr ⇨ Meas > Mesial : ###* ]<br>(1 to 99) percent in 0.01% increments<br>Sets the mesial parameter for the risetime calculation. |
| **MINUTE** | ### | [*Util > Clock > Minute : ###* ]<br>(0 to 59)<br>Changes the minutes entry of the realtime clock and resets seconds to :00. |
| **MK2 - MK1** | | [*Pwr ⇨ Mark > Extensions > Mk Math : Mk 2 - Mk 1* ]<br>Selects the expression used in power ratio measurements. |
| **MK1 - MK2** | | [*Pwr ⇨ Mark > Extensions > Mk Math : Mk 1 - Mk 2* ]<br>Selects the expression used in power ratio measurements. |
| **MK1CH1** | --- | [*Mark > Extensions > Mk 1 CH : CH 1* ]<br>Sets marker 1 to read from channel 1. |
| **MK1CH2** | --- | [*Mark > Extensions > Mk 1 CH : CH 2* ]<br>Sets marker 1 to read from channel 2. |
| **MK1CHM** | --- | [*Mark > Extensions > Mk 1 CH : CH Math* ]<br>Sets marker 1 to read from channel math. |
| **MK1REF1** | --- | [*Mark > Extensions > MK1 CH: Ref 1*]<br>Sets marker 1 to read from reference channel 1. |
| **MK1REF2** | --- | [*Mark > Extensions > MK1 CH: Ref 2*]<br>Sets marker 1 to read from reference channel 2. |
| **MK2CH1** | --- | [*Mark > Extensions > Mk 2 CH : CH 1* ]<br>Sets marker 2 to read from channel 1. |
| **MK2CH2** | --- | [*Mark > Extensions > Mk 2 CH : CH 2* ]<br>Sets marker 2 to read from channel 2. |
| **MK2CHM** | --- | [*Mark > Extensions > Mk 2 CH : CH Math* ]<br>Sets marker 2 to read from channel math. |
| **MK2REF1** | --- | [*Mark > Extensions > MK1 CH: Ref 1*]<br>Sets marker 2 to read from reference channel 1. |
| **MK2REF2** | --- | [*Mark > Extensions > MK1 CH: Ref 2*]<br>Sets marker 2 to read from reference channel 2. |

## Table 5-2 Model 4400A/4500A Listen Mode Bus Mnemonics *(continued)*

| Code | Arg | [Equivalent Keystrokes]<br>Function |
|---|---|---|
| **MKAVG** | --- | [*Pwr* ⇨ *Mark* > *Extensions* > *Delta Marker : Avg* ]<br>Sets the delta marker mode to read the average power between markers in the center window and talk it over the bus. |
| **MKBOTH** | --- | [*Mark* > *Extensions* > *Mk Group : Both* ]<br>Assigns a marker to a source. |
| **MKCENTER** | --- | [*Mark* > *Set Vrt Cntr : Center* ]<br>Changes the vertical center (log mode) or the vertical offset (linear mode) to the value where the active marker crosses the waveform. The command functions even if the waveform is off the screen. Does not function in Stat Mode when PDF is selected. |
| **MKEACH** | --- | [*Mark* > *Extensions* > *Mk Group : Each* ]<br>Assigns a marker to a source. |
| **MKRATIO** | --- | [*Pwr* ⇨ *Mark* > *Extensions* > *Delta Marker : Ratio* ]<br>Sets the delta marker mode to display in the center marker window the ratio between the powers at Markers 1 and 2. The ratio is talked over the bus in Talk Measure mode (See **TKMEAS** mnemonic in Table 5-3). |
| **MMPWR** | --- | Same as MMPOWER |
| **MMPOWER** | --- | [*Pwr* ⇨ *Meas* > *Define Pulse* > *Meas Mode: Pwr*]<br>The measurement mode power sets the pulse definitions to work in percent of power. This affects the distal, mesial, and proximal points. These are used by the instrument to determine the automatic measurements. |
| **MMVOLTS** | --- | [*Pwr* ⇨ *Meas* > *Define Pulse* > *Meas Mode: Volts*]<br>The measurement mode volts sets the pulse definitions to work in percent of voltage. This affects the distal, mesial, and proximal points. These are used by the instrument to determine the automatic measurements. The default mode is power and all specifications and references to automatic measurements are in terms of power unless specifically indicated to be in voltage. |
| **MONTH** | ### | [*Util* > *Clock* > *Month : ###* ]<br>(1 to 12)<br>Change the month entry for the realtime clock. |
| **MP1** | ### | [*Mark* > *Time Mark 1 : ###* ]<br>(0 to 500)<br>Marker 1 position in pixels for currently selected window. |
| **MP2** | ### | [*Mark* > *Time Mark 2* : ### ]<br>(0 to 500)<br>Marker 2 position in pixels for currently selected window. |
| **MT1** | ### | [*Pwr* ⇨ *Mark* > *Time Mark 1 : ###* ]<br>Display time range.<br>Time in seconds relative to trigger event. Markers are forced to be within the screen limits. If time entered is out of screen limits, the marker will appear in the first or last screen position.<br><br>*Example*:<br>10.1 µs would be sent as “MT1 10.1E-06.” |

## Table 5-2 Model 4400A/4500A Listen Mode Bus Mnemonics *(continued)*

| Code | Arg | [Equivalent Keystrokes]<br>Function |
|---|---|---|
| **MT2** | ### | [*Pwr ➪ Mark > Time Mark 2 : ###* ]<br>Display time range.<br>Time in seconds relative to trigger event. Markers are forced to be within the screen limits. If time entered is out of screen limits, the marker will appear in the first or last screen position. |
| **NEWCOLOR** | --- | [*Disp > Format > Set Color > Init Colors : INIT* ]<br>Initializes the display colors to the factory defaults. This is equivalent to the front panel command "Init Colors" under display menu. |
| **OFFSET** | ### | [*Chan # > Extensions > dB Offset : ###* ]<br>(-99.99 to 99.99) dB in .01 dB steps<br>Enter a correction factor in dB. Used to compensate for attenuators or amplifiers. Affects the currently selected channel. |
| **PARAMBL** | ### | [*Pwr ➪ Meas > Param Meas : Bottom Left ###*]<br>The number entered assigns the automatic measurement which is displayed in the bottom left parameter field in the graph mode. The parameter display mode must be set to measure to display the automatic measurements. The channel used for the measurement is selected from the currently active channel. (See Table 4-19) |
| **PARAMBM** | ### | [*Pwr ➪ Meas > Param Meas* : *Bottom Middle ###* ]<br>The number entered assigns the automatic measurement which is displayed in the bottom middle parameter field in the graph mode. The parameter display mode must be set to measure to display the automatic measurements. The channel used for the measurement is selected from the currently active channel. |
| **PARAMBR** | ### | [*Pwr ➪ Meas > Param Meas : Bottom Right ###*]<br>The number entered assigns the automatic measurement which is displayed in the bottom right parameter field in the graph mode. The parameter display mode must be set to measure to display the automatic measurements. The channel used for the measurement is selected from the currently active channel. |
| **PARAMML** | ### | [*Pwr ➪ Meas > Param Meas : Middle Left ###* ]<br>The number entered assigns the automatic measurement which is displayed in the middle left parameter field in the graph mode. The parameter display mode must be set to measure to display the automatic measurements. The channel used for the measurement is selected from the currently active channel. |
| **PARAMMM** | ### | [*Pwr ➪ Meas > Param Meas : Middle ###* ]<br>The number entered assigns the automatic measurement which is displayed in the middle parameter field in the graph mode. The parameter display mode must be set to measure to display the automatic measurements. The channel used for the measurement is selected from the currently active channel. |
| **PARAMMR** | ### | [*Pwr ➪ Meas > Param Meas : Middle Right ###* ]<br>The number entered assigns the automatic measurement which is displayed in the middle right parameter field in the graph mode. The parameter display mode must be set to measure to display the automatic measurements. The channel used for the measurement is selected from the currently active channel. |

## Table 5-2 Model 4500 Listen Mode Bus Mnemonics *(continued)*

| Code | Arg | [Equivalent Keystrokes]<br>Function |
|---|---|---|
| **PARAMTL** | ### | [*Pwr ⇨ Meas > Param Meas : Top Left ###* ]<br>The number entered assigns the automatic measurement which is displayed in the top left parameter field in the graph mode. The parameter display mode must be set to measure to display the automatic measurements. The channel used for the measurement is selected from the currently active channel. |
| **PARAMTM** | ### | [*Pwr ⇨ Meas > Param Meas : Top Middle###-* ]<br>The number entered assigns the automatic measurement which is displayed in the top middle parameter field in the graph mode. The parameter display mode must be set to measure to display the automatic measurements. The channel used for the measurement is selected from the currently active channel. |
| **PARAMTR** | ### | [*Pwr ⇨ Meas > Param Meas : Top Right ###* ]<br>The number entered assigns the automatic measurement which is displayed in the top right parameter field in the graph mode. The parameter display mode must be set to measure to display the automatic measurements. The channel used for the measurement is selected from the currently active channel. |
| **PERSOFF** | --- | [*Display > Persistence: Off*]<br>This command turns the display persistence off. |
| **PERSON** | --- | [*Display > Persistence: On*]<br>This command turns the display persistence on for Channel 1, Channel 2, and the Math Channel, and forces the trace type for these channels to dots. The command is only valid when the measurement mode is pulse power. In this mode the instrument will only draw waveform data to the screen and never erase it. To erase data send the **CLRSCR** command. There are commands which will clear the screen as part of their operation, these include display, timebase and trigger related commands. Persistence is a display only representation, this data can only be output to a printer. Plotters that use HPGL will not record the persistence data. |
| **PK/AVG** | --- | [ *Pwr ⇨ Mark > Extensions > Mk Math : Pk/Avg* ]<br>Sets the marker mode to display peak to average power between markers. This function only operates when the markers are set to BOTH and the timebase is 5ms/div and faster. The three marker windows will display the peak, long-term average and peak-to-average power ratios between the markers. These values may be reset by using the **CLRSCR** command. Pixel averaging is automatically set to 1, and the channel averaging parameter is used to determine the number of screens to process for calculating long term average. |
| **PKINGOFF** | --- | [*Pwr ⇨ Spcl > Peaking Mode : Off* ]<br>Turn the measurement peaking mode off. |
| **PKINGON** | --- | *Pwr ⇨ Spcl > Peaking Mode : On* ]<br>Turn the measurement peaking mode on. |
| **PLABEL1** | --- | *"String" Bus Only*<br>The PLABEL1 command enters a string of up to 19 characters into the first plot label field. This field can be displayed in the graph mode by turning on the plotter label mode. The string should start and end with the double quotation character (").<br>*Example:*<br>PLABEL1 "HELLO"<br>This will display the message HELLO in the first plot label field if enabled under the *Util > Plotter > Plot Label On*. |

## Table 5-2 Model 4400A/4500A Listen Mode Bus Mnemonics *(continued)*

| Code | Arg | [Equivalent Keystrokes] Function |
|---|---|---|
| **PLABEL2** | --- | *"String" Bus Only*<br>The PLABEL2 command enters a string of up to 19 characters into the second plot label field. This field can be displayed in the graph mode by turning on the plotter label mode. The string should start and end with the double quotation character (''). |
| **PLABEL3** | --- | *"String" Bus Only*<br>The PLABEL3 command enters a string of up to 19 characters into the third plot label field. This field can be displayed in the graph mode by turning on the plotter label mode. The string should start and end with the double quotation character (''). |
| **PLABEL4** | --- | *"String" Bus Only*<br>The PLABEL4 command enters a string of up to 19 characters into the fourth plot label field. This field can be displayed in the graph mode by turning on the plotter label mode. The string should start and end with the double quotation character (''). |
| **PLOT** | --- | [ **PLOT** Key ]<br>Creates a plotter output from the display buffer and transmits the output via the selected output port to the assigned device. |
| **PLOTDISK** | --- | [*Util > Hardcopy > Output Port: DISK*]<br>Redirects the plotter or printer output data to a file on disk. The PLOT command is required to start the process. |
| **PLOT488** | --- | [*Util >Hardcopy > Output Port : IEEE-488* ]<br>The output port for the output device is IEEE-488. Device must be only device on bus. |
| **PLOTLPT1** | --- | [ Util > Hardcopy > Output Port : LPT1 ]<br>The output port for the printer or plotter is assigned to the parallel port (LPT1). |
| **PLOTSER1** | --- | [*Util > Hardcopy > Output Port : COM 1* ]<br>The output port for the printer or plotter is assigned to the serial port 1. |
| **PLOTCOM1** | --- | [ *Util > Hardcopy > Output Port : COM1* ]<br>The output port for the printer or plotter is assigned to serial port 1 (COM1). |
| **PLOTTER** | --- | [*Util > Hardcopy > Device: Plotter* ]<br>The output device of plotter is selected. This function selects an HPGL vector compatible drawing device. |
| **PLOT7470** | --- | [*Util > Hardcopy > Model : 7470* ]<br>The 7470 plotter is assigned as the active plotter device. This command will only affect the plotter type and will have no effect on printers. |
| **PLOT7475** | --- | [*Util > Hardcopy > Model : 7475* ]<br>The 7475 plotter is assigned as the active plotter device. This command will only affect the plotter type and will have no effect on printers. |
| **PLOTF310** | --- | [*Util > Hardcopy > Model : F310* ]<br>The F310 plotter is assigned as the active plotter device. This command will only affect the plotter type and will have no effect on printers. |
| **PLOTHPGL** | --- | [*Util > Hardcopy > Model : HPGL* ]<br>The HPGL plotter is assigned as the active plotter device. This command will only affect the plotter type and will have no effect on printers. |

## Table 5-2 Model 4400A/4500A Listen Mode Bus Mnemonics *(continued)*

| Code | Arg | [Equivalent Keystrokes]<br>Function |
|---|---|---|
| **PLOTTJET** | --- | [*Util >Hardcopy > Model : ThinkJet* ]<br>The ThinkJet printer is assigned as the active printer device. This command will only affect the printer type and will have no effect on plotters. |
| **PLOTLJET** | --- | [*Util > Hardcopy > Model : LaserJet* ]<br>The LaserJet printer is assigned as the active printer device. This command will only affect the printer type and will have no effect on plotters. |
| **PMEAS** | --- | [*Pwr ⇨ Meas > Param Meas > Param Mode : Meas* ]<br>The parameter fields in the graph mode will display the automatic measurements assigned to each of the nine fields. |
| **POWER** | --- | [> *Measure Mode: Power* ]<br>This command switches the instrument to the power measurement mode. This mode affects the instrument's fundamental measuring operation and the menu structure. When in this mode, the instrument can make CW and triggered peak power measurements. |
| **PRINTER** | --- | [*Util > Hardcopy > Device: Printer* ]<br>The output device of printer is selected. This function selects a bit-mapped screen dump printing device. |
| **PROXIMAL** | ### | [*Pwr ⇨ Meas > Proximal : ###* ]<br>(1 to 99) percent in 0.01% increments.<br>Sets the proximal parameter for the risetime calculation. |
| **PSTAT** | --- | [*Pwr ⇨ Meas > Param Meas > Param Mode : Stat* ]<br>The parameter fields in the graph mode will display the status of the selected channel. |
| **RED** | ### | [*Disp > Format > Set Colors > Red : ###* ]<br>(0 to 255)<br>Sets the intensity of the red component of the display; affects the color and brightness of the selected color item. See **COLOR**. |
| **REFCH1** | --- | Combines the keyboard commands:<br>[*Prgm > Ref Save > Source : CH 1* ] and<br>[*Prgm > Ref Save > Waveform : Store* ]<br>Makes CH 1 the source for the currently selected reference waveform channel; then stores the waveform from CH 1 into the currently selected reference channel. |
| **REFCH2** | --- | Combines the keyboard commands:<br>[*Pwr ⇨ Prgm > Ref Save > Source : CH 2* ] and<br>[*Pwr ⇨ Prgm > Ref Save > Waveform : Store* ]<br>Makes CH 2 the source for the currently selected reference waveform channel; then stores the waveform from CH 2 into the currently selected reference channel. |
| **REFCHM** | --- | Combines the keyboard commands:<br>[*Prgm > Ref Save > Source : CH Math* ] and<br>[*Prgm > Ref Save > Waveform : Store* ]<br>Makes CHM the source for the currently selected reference waveform channel. The command then stores the waveform from CHM into the currently selected reference channel. |

## Table 5-2 Model 4400A/4500A Listen Mode Bus Mnemonics *(continued)*

| Code | Arg | [Equivalent Keystrokes]<br>Function |
|---|---|---|
| **REF1** | --- | [*Chan > Select : Ref 1* ]<br>Selects the reference channel that all following commands affect. See **REFCH1**, **REFCH2**, and **REFCHM**. |
| **REF2** | --- | [*Chan > Select : Ref 2* ]<br>Selects the reference channel that all following commands affect. See **REFCH1**, **REFCH2**, and **REFCHM**. |
| **REFSAV** | --- | [*Prgm > Ref Save > Waveform: Store*]<br>Reference save moves a waveform from a measurement channel specified by the reference save source to the reference channel save destination. |
| **RL1** | ### | [*REF > REF Line 1: ###*]<br>This is the level at which the horizontal reference line 1 will be set. |
| **RL2** | ### | [ *REF > REF Line 2: ###*]<br>This is the level at which the horizontal reference line 2 will be set. |
| **RLOFF** | --- | [*REF > Extensions > REF CH Sel : Off*]<br>This turns the reference lines off. |
| **RLCH1** | --- | [*REF > Extensions > REF CH Sel : CH1*]<br>This assigns the reference lines to channel 1. This is important because each channel can have a different vertical scale and offset which affects the position of the reference lines on the screen. |
| **RLCH2** | --- | [*Pwr ➪ REF > Extensions > REF CH Sel : CH2*]<br>This assigns the reference lines to channel 2. This is important because each channel can have a different vertical scale and offset which affects the position of the reference lines on the screen. |
| **RLCHM** | --- | [*REF > Extensions > REF CH Sel : CHM*]<br>This assigns the reference lines to channel Math. This is important because each channel can have a different vertical scale and offset which affects the position of the reference lines on the screen. |
| **RLREF1** | --- | [*REF > Extensions > REF CH Sel: Ref 1*]<br>Sets both reference lines to reference 1 channel. |
| **RLREF2** | --- | [*REF > Extensions > REF CH Sel: Ref 2*]<br>Sets both reference lines to reference 2 channel. |
| **RLSTOMKS** | --- | [*Ref > Refs to Mks : Set*]<br>Set the reference line to current marker positions. This function will update the reference lines with the value being displayed for marker 1 and marker 2. Marker 1 is loaded into reference 1 and marker 2 is loaded into reference 2. If the markers are on different channels or the markers are in the Min-Max mode the displayed values will be used. |
| **RLTD&M** | --- | [*Pwr ➪ REF > Extensions > REF Track : Dist-Mesial*]<br>This enables the reference line tracking of the distal and mesial levels of the assigned channel. The levels are displayed in the REF CH Sel menu. The distal amplitude is assigned to reference line 1 and the mesial amplitude is assigned to reference line 2. |

## Table 5-2 Model 4400A/4500A Listen Mode Bus Mnemonics *(continued)*

| Code | Arg | [Equivalent Keystrokes]<br>Function |
|---|---|---|
| **RLTD&P** | --- | [*Pwr ⇨ REF > Extensions > REF Track : Dist-Proximal*]<br>This enables the reference line tracking of the distal and proximal levels of the assigned channel. The levels are displayed in the REF Line # menu. The distal amplitude is assigned to reference line 1 and the proximal amplitude is assigned to reference line 2. |
| **RLTT&B** | --- | [*Pwr ⇨ REF > Extensions > REF Track : Top-Bottom*]<br>This enables the reference line tracking of the top and bottom amplitudes of the assigned channel. The levels are displayed in the REF Liine # menu and automatic measurements. The top amplitude is assigned to reference line 1 and the bottom amplitude is assigned to reference line 2. |
| **RLTMKR** | --- | [*Pwr ⇨ REF > Extensions > REF Track : Markers*]<br>This enables the reference line tracking of the markers of the assigned channel. The levels are displayed in the REF Line # menu and automatic measurements. This forms a cross-hair cursor at the intersection of the waveform and the markers. Marker 1 is assigned to reference line 1 and marker 2 is assigned to reference line 2. |
| **RLTOFF** | --- | [*REF > Extensions > REF Track : Off*]<br>This disables the reference line tracking. |
| **RSDREF1** | --- | [*Prgm > Ref Save > Destination: Ref 1*]<br>Reference save destination selects reference 1 as the channel where the next **REFSAV** command will save the source measurement channel. |
| **RSDREF2** | --- | [*Prgm > Ref Save > Destination: Ref 2*]<br>Reference save destination selects reference 2 as the channel where the next **REFSAV** command will save the source measurement channel. |
| **RSSCH1** | --- | [*Prgm > Ref Save > Source: CH1*]<br>Reference save source selects channel 1 as the source for the **REFSAV** command. |
| **RSSCH2** | --- | [*Prgm > Ref Save > Source: CH2*]<br>Reference save source selects channel 2 as the source for the **REFSAV** command. |
| **RSSCHM** | --- | [*Prgm > Ref Save > Source: CHM*]<br>Reference save source selects channel math as the source for the **REFSAV** command. |
| **RUN** | --- | [ *> Measurement : Run* ]<br>Puts the instrument into the measurement running mode to capture new data. |
| **SCRFULL** | --- | [*Disp > Screen : Full* ]<br>In the graph mode only one waveform display is active at full vertical resolution of 281 pixels. |
| **SCRSPLIT** | --- | *[Disp > Screen : Split* ]<br>In the graph mode two waveform displays are active, each at one-half the vertical resolution of 141 pixels each. |
| **SINGLE** | --- | [*Pwr ⇨ > Measurement : Single* ]<br>Initiates the capture of new data related to one trigger event in Stop mode. |

## Table 5-2 Model 4400A/4500A Listen Mode Bus Mnemonics *(continued)*

| Code | Arg | [Equivalent Keystrokes] Function |
|---|---|---|
| **STAT** | --- | [ > *Measurement Mode : Stat* ]<br>Stat is an abbreviation for statistical mode. This command changes the instrument's measurement mode to continuous sampling. When the instrument is in Stat mode, the measurement talk modes format changes. See Talk Mode Table 5-3. This command is only available on the Model 4500A; it is not supported by the Model 4400A. |
| **STOP** | --- | [ > *Measurement : Stop* ]<br>Stops data capture and hold the last set of data. Measurements based on this data set may be made in Stop mode. |
| **TEXT** | --- | [*Text/Graphics* ]<br>Places the display into the automatic measurement mode. |
| **TIMEBASE** | ### | [*Pwr* ⇨ *Time* > *Timebase : ###* ]<br>(1 ns to 1s ) in secs.<br>Set time per division. |
| **TOPWIND** | --- | [*Mark* > *Window : Top* ]<br>Sets the markers to the top window in the split display. |
| **TRAUTO** | --- | [*Pwr* ⇨ *Trig* > *Trig Mode : Auto* ]<br>Selects the automatic trigger mode. |
| **TRCH1INT** | --- | [*Pwr* ⇨ *Trig* > *Trig Source : INT CH1* ]<br>Selects the CH 1 internal trigger source. |
| **TRCH2INT** | --- | [*Pwr* ⇨ *Trig* > *Trig Source : INT CH2* ]<br>Selects the CH2 internal trigger source. |
| **TRCH1EXT** | --- | [*Pwr* ⇨ *Trig* > *Trig Source : EXT CH1* ]<br>Selects the CH1 external trigger source. |
| **TRCH2EXT** | --- | [*Pwr* ⇨ *Trig* > *Trig Source : EXT CH2* ]<br>Selects the CH 2 external trigger source. |
| **TRCENTER** | --- | [*Pwr* ⇨ *Time* > *Position : M* ]<br>Set the trigger position to the center of the display. |
| **TRDELAY** | ### | [*Pwr* ⇨ *Time* > *Trig Delay : ###* ]<br>(Variable based on timebase units in seconds.)<br>Sets the time delay offset for the capture of data relative to the trigger event. |
| **TREDGE+** | --- | [*Pwr* ⇨ *Trig* > *Trig Slope : +* ]<br>Sets the trigger slope to the positive-going edge of the pulse signal. |
| **TREDGE-** | --- | [*Pwr* ⇨ *Trig* > *Trig Slope : -* ]<br>Sets the trigger slope to the negative-going edge of the pulse signal. |
| **TRLEFT** | --- | [*Pwr* ⇨ *Time* > *Position : L* ]<br>Sets the trigger position to the left side of the display. |

## Table 5-2 Model 4400A/4500A Listen Mode Bus Mnemonics *(continued)*

| Code | Arg | [Equivalent Keystrokes]<br>Function |
|---|---|---|
| **TRLEVEL** | **###** | **Same as TRLVL** |
| **TRLVL** | **###** | [*Pwr ➪ Trig > Trig Level* : *###* ]<br>(-39.99 to +20) dBm in .01 dBm steps for Internal Trigger.<br>(-3 to +3) volts in .01 volt steps for External Trigger.<br>Sets the trigger level. The range depends on whether the trigger source is internal or external. The range and entry value are affected by *dB Offset* and *CF in dB* for the selected internal trigger channel. |
| **TRNORM** | **---** | [*Pwr ➪ Trig > Trig Mode :* Auto ]<br>Selects the normal trigger mode. |
| **TRRIGHT** | **---** | [*Pwr ➪ Time > Position : R* ]<br>Sets the trigger position to the right edge of the display. |
| **TTDOT** | **---** | [*Disp > Format > Trace Type : Points* ]<br>Sets trace type to point representation. Affects currently selected channel. |
| **TTLINE** | **---** | [*Disp > Format > Trace Type : Line* ]<br>Sets trace type to line representation. Affects currently selected channel. |
| **TTOFF** | **---** | [*Disp > Format > Trace Type : Off* ]<br>Sets trace type to off. Affects currently selected channel. The channel with an off trace continues to measure, but does not display the resulting trace. |
| **TWBOT** | **---** | [*Mark > Window : Bottom* ]<br>Selects the bottom window as the active window in split screen display for the currently selected channel. |
| **TWTOP** | **---** | [*Mark > Window : Top* ]<br>Selects the top window as the active window in split screen display for the currently selected channel. |
| **VCENTER** | **###** | [*Chan # > Vert Center : ###* ]<br>(-99.99 to +99.99) dB in .01 dB steps in log mode.<br>(0 to 99.99) divisions in .01 division increments in linear mode.<br>Sets the level for the horizontal centerline of the graph for the currently selected channel. |
| **VSCALE** | **###** | [*Chan # > Vert Scale : ###* ]<br>(0.1 to 20) dB/div for full screen log mode.<br>(0.2 to 40) dB/div for split screen log mode.<br>(1.0e-9 to 5.0e7) W/div in full screen linear mode.<br>(2.0e-9 to 1.0e8) W/div in split screen linear mode.<br>Sets the vertical sensitivity of the display. |
| **WEEKDAY** | **###** | [*Util > Clock > Day of Week : ###* ]<br>This command is maintained for compatibility purposes. It still allows the day of the week to be read back over the GPIB using the active function talkmode **(TKFUNC)**, however it may no longer be set, since it is calculated automatically from the date. Any argument passed to **WEEKDAY** will be ignored.<br>(1 = Sun; 7 = Sat) |

## Table 5-2 Model 4400A/4500A Listen Mode Bus Mnemonics *(continued)*

| Code | Arg | [Equivalent Keystrokes]<br>Function |
|---|---|---|
| **WFMRCL** | --- | [*Prgm > WFM Recall > Waveform: Recall*]<br>Waveform recall reads a reference waveform from disk into a reference channel for display. |
| **WFMSAV** | --- | [*Prgm > WFM Store > Waveform: Store*]<br>Waveform store writes a reference waveform to the disk from a reference channel. |
| **WFRDREF1** | --- | [*Prgm > WFM Recall > Destination: Ref 1*]<br>Waveform recall destination is set to reference 1. |
| **WFRDREF2** | --- | [*Prgm > WFM Recall > Destination: Ref 2*]<br>Waveform recall destination is set to reference 2. |
| **WFSSREF1** | --- | [*Prgm > WFM Store > Source: Ref 1*]<br>Waveform storage source is set to reference 1. |
| **WFSSREF2** | --- | [*Prgm > WFM Store > Source: Ref2*]<br>Waveform storage source is set to reference 2. |
| **XAXIS** | ### | [*Stat ⇨ Time > X Axis*]<br>The X-Axis command sets the horizontal scale for the Stat Mode waveform display. This command applies to the CDF, 1-CDF and PDF selections. |
| **XON** | --- | [*Util > Serial > Serial 1 > Handshake : XON* ]<br>Enables character based handshaking for the serial output port. |
| **XOFF** | --- | [*Util > Serial > Serial 1 > Handshake : XOFF* ]<br>Disables character based handshaking for the serial output port. |
| **YEAR** | ### | [*Util > Clock > Year ###*]<br>(1990 to 2089)<br>Changes the year entry of the realtime clock. |
| **ZERO** | --- | [*Chan # > Calibration > Zeroing : START* ---]<br>Performs CW zeroing on the currently selected channel. The signal applied to the sensor must be turned off before issuing the zero command. Error status should always be checked after zeroing to verify successful calibration. |
| **%CDF** | --- | [*Stat ⇨ Meas > Stat mode: CDF*]<br>[ *> Measure Mode : CDF ]*<br>The CDF command will change the waveform display in the stat measurement mode to CDF. CDF displays the cumulative distribution function plot. See Chapter 6, Application Notes, for a discussion of Cumulative Distribution Function. This command is only available on the Model 4500A; it is not supported by the Model 4400A. |
| **%PDF** | --- | [*Stat ⇨ Meas > Stat mode: PDF*]<br>[ *> Measure Mode : PDF* ]<br>The PDF command will change the waveform display in the stat measurement mode to PDF. PDF displays the probability density function plot. See Chapter 6, Application Notes, for a discussion of Probability Density Function. This command is only available on the Model 4500A; it is not supported by the Model 4400A. |

## Table 5-2 Model 4400A/4500A Listen Mode Bus Mnemonics *(continued)*

| Code | Arg | [Equivalent Keystrokes]<br>Function |
|---|---|---|
| **%1-CDF** | --- | [*Stat ⇨ Meas > Stat mode: 1-CDF*]<br>[ *> Measure Mode : 1-CDF* ]<br>The 1-CDF plots the inversion of the CDF waveform. CDF plot displays the data so the markers read as the percent of samples that are less than or equal to a power level. In 1-CDF the markers read as the percent of samples that are greater than a power level. This command is only available on the Model 4500A; it is not supported by the Model 4400A. |
| **%OFFSET** | ### | [*Stat ⇨ Time > %OFFSE*T: *###*]<br>Accepts values of 0 to 99% with 1 decimal place of resolution. The value is limited to valid settings; invalid values are ignored. For example, with an X-axis of 10% per division, the only valid %OFFSET is 0. This is because the display has 10 horizontal divisions, and all data is displayed from 0 to 100%. |
| ***CLS** | --- | [**CLR** Key ]<br>The bus clear command clears all errors. |
| ***RCL** | --- | [ *Prgm > Instr Recall > Instrument : RECALL* ]<br>This command recalls a previously saved instrument configuration from NVRAM. Note that the setup is retrieved from an NVRAM location only, even if the **INSDISK** command has been issued. The NVRAM location for the recall operation must first be set with the **LOCATION** command. If the NVRAM location is invalid, the recall operation will not be performed. |
| ***RST** | --- | Resets all operating selections to their default values (similar to INIT), except the hardware configuration, operation of the IEEE-488 bus, serial ports, and colors. |
| ***SAV** | --- | [ *Prgm > Instr Store > Instrument : STORE* ]<br>This command stores the current instrument configuration to NVRAM. Note that the setup is saved to an NVRAM location only, even if the **INSDISK** command has been issued. The NVRAM location for the store operation must first be set with the **LOCATION** command. If the NVRAM location is invalid, the store operation will not be performed. |
| ***SRE** | ### | [*Util > IEEE-488 > SRQ Mask : ###* ]<br>Enters the mask value for enabling SRQs on the bus. Each bit position represents a specific event. See Table 5-4. |
| ***TRG** | --- | [*Single* ]<br>Equivalent to the GET line on the bus. This function will generate a trigger condition that is used by the instrument to capture new data. The instrument must be in the Stop mode for the command to be effective. |

## 5.3 Talk Mode

The instrument may be addressed as a talker without regard for remote/local condition. When the talker state is set by the bus controller, the instrument sends a character string which is determined by the current Talk mode. The different Talk modes are selected by sending the appropriate mnemonic with the instrument addressed as a listener. The selected mode will remain in effect until changed. Table 5-3 lists the Talk mode (bus) mnemonics.

*Note that some of these mnemonics are supported only by the Model 4500A. If a mnemonic indicates Pwr ⇨ or has no mode notation, it is supported by both the Model 4400A and Model 4500A. If the mnemonic function pertains only to statistical mode or has only the Stat ⇨ notation, it is not supported by the Model 4400A.*

**Table 5-3 Model 4400A/4500A Talk Mode Bus Mnemonics**

| Code | Arg | [Equivalent Keystrokes] Function |
|---|---|---|
| **TKAMEAS** | -- | Sets the Talk string to report the automatic measurements for the active channel in one string. The number and format of automatic measurements changes when the instrument is in the power mode versus the stat mode. |
| | *Pwr* ⇨ | In power mode, the first value is a measurement error flag; any non-zero value is an error number. Each measurement has a preceding number that is a validity flag. If the flag is “1” the reading is valid; if “0” it is not. The automatic measurements depend on the data captured in the waveform buffer to make measurements. For measurements such as duty cycle, period, repetition frequency, and average power, at least three transitions must be on screen. Putting the instrument in the *Time > Pos L* mode with a small negative trigger delay is recommended to bring the waveform edge on the screen.<br><br>The order of the measurement is:<br>1) Peak Power 2) Pulse Power 3) Overshoot 4) Average/CW Power 5) Pulse Top Amplitude 6) Pulse Bottom Amplitude 7) Pulse Width 8) Risetime 9) Falltime 10) Period 11) Pulse Repetition Frequency 12) Duty Cycle 13) Offtime 14) Delay<br><br>Log Mode Example:<br>0, 1, 9.82, 1, 9.79, 1, 0.04, 1, -0.32, 1, 9.79, 1, -21.24, 1, 10.04-E-06, 1, 0.00E-06, 1, 0.40E-06, 1, 100.00E-06, 1, 10000E00, 1, 10.04, 1, 89.92E-06 |
| | *Stat* ⇨ | In stat mode there is only one status flag for all the measurements. The first value is the status flag.<br>Status = 1 The instrument is taking new readings and the current measurements are valid.<br>Status = 0 The instrument is not reading and there is no valid measurement.<br>Status = -1 The instrument has stopped taking new readings, but all measurements are valid.<br><br>The order of the measurement is:<br>1) CDF status flag 2) Peak Power 3) Minimum Power 4) Dynamic Range 5) Average Power, 6) Pk/Avg Ratio 7) Total Time (seconds) 8) Total Points (mega-samples) 9) Tolerance<br><br>Log Mode Example<br>1, 16.25, -40.12, 56.37, 4.89, 11.36, .10, 50, 0.02 |

## Table 5-3 Model 4400A/4500A Talk Mode Bus Mnemonics

| Code | Arg | [Equivalent Keystrokes]<br>Function |
|---|---|---|
| **TKBMEAS** | --- | Sets the Talk string to report the values of the marker windows for both measurement channels. The string begins with a measurement error flag. If the following readings are invalid, this will be set to a non-zero value corresponding to the error number. In this case, the measurements should be ignored. The second value is always the value of Marker 1 that is displayed in the left window in the graphic display mode. The third value is the value of Marker 2 that matches the number in the right window in the graphic display mode. The fourth number is either the average power level of the portion of the waveform between the markers or the ratio of the two marker measurement windows as set by **MKAVG**, **MKRATIO**, **MK1-MK2**, **MK2-MK1**, **MIN-MAX**, MAX-MIN, or **PK/AVG**. Note that the error flag will not show an error if the delta marker is undefined, but a value of zero will be returned for the delta measurement. In the Watts mode, the numbers are presented in floating point notation with E-09 = nW, E-06 = uW, E-03 = mW, E00 = W, E03 = kW.<br><br>Example (dBm ratio): 0, -12.34, 19.88, 32.22, 12.01, 13.25, 1.24<br>Example (Watts ratio): 0, 57,.54E-06, 97.24E-03, 0.04, 15.88E-03, 21.13E-03, 133.0 |
| **TKBDISP** | --- | Bus Only<br>This command sends the same data as the TKDISP command, except in binary format, and in one message.<br><br>When executed this command places the instrument in a mode that will talk the same display normalized data as the TKDISP command, but in binary form. This command sends all 501 points over the bus in one string. Each point of the display is represented in the IEEE-488 string as a two byte signed 16 bit number. All waveform points that are negative or zero are invalid points and should be ignored.<br><br>Format String Returned:<br>"#800000501" followed by 501 words or 1002 bytes followed by selected terminator and the last byte has EOI set.<br><br>Binary HEX:23383030303030353031001200120014012 3.....0D0A<br>EOI<br><br>This command must be used with care, because normal bus operation must be suspended for the length of the string. The binary data can contain any 8 bit code from 00 to FF hex. This includes the normal terminators. Most bus controllers support a block or buffer read operation that will only look for EOI or the absolute string length. A block read or enter command must be used when the instrument is in this mode. |
| **TKDISP** | --- | Sends fifty values that represent the display normalized data for the currently selected channel over a specified region of the display. The number specifies the starting point. If repeated Talk commands are received, the instrument sends the next group of fifty values automatically. When the end of the display buffer is reached, the numbers automatically wrap around to the beginning. The range of received numbers is -1 for “off” and 0 to 280 for each of the 501 horizontal points on the graph.<br><br>*Example:*<br>Output TKDISP 0<br>Enter Display points 0 to 49<br>Enter Display points 50 to 99<br>Enter Display points 100 to 149<br>(...)<br>Enter Display point 500, followed by 0 to 49<br><br>This will continue until a new Talk mode command is issued |

## Table 5-3 Model 4400A/4500A Talk Mode Bus Mnemonics *(continued)*

| Code | Arg | [Equivalent Keystrokes] Function |
|---|---|---|
| **TKERR** | --- | Causes the instrument to send a string that describes the error state of the instrument and measurement. After sending the error string, errors are cleared and the Talk mode returns to the previous Talk mode.<br><br>Format : #1, #2<br>where #1 is the instrument error number and #2 is the measurement error number. |
| **TKERRMSG** | --- | Causes the instrument to send a string that describes the error state of the instrument and measurement, followed by an error description string. After sending the error string, the errors are cleared and the Talk mode returns to the previous Talk mode.<br><br>Format : #1, #2, $1<br>where #1 is the instrument error, #2 is the measurement error number, and $1 is an error message (maximum of 25 characters) that describes the problem. |
| **TKFREE** | --- | Returns the number of bytes available on the diskette for data storage. This is a temporary talk command. The instrument will return the TKFREE value, then return to the previous talk mode. (-1 represents that no disk is present.) |
| **TKFUNC** | --- | Causes the instrument to talk a value that represents the current setting of a selected function. Functions are bus commands that allow number entry. After talking the value, the instrument returns to the previous talk mode.<br><br>Example: send FREQ TKKEY<br>read 23 |
| **TKKEY** | --- | Talks the key code of the last key depressed. The instrument will return the TKKEY value once then return to the previous talk mode.<br><br>Example: after depressing the front panel "ESC" key;<br>send - TKKEY<br>read - 8 |
| **TKMEAS** | --- | Sets the Talk string to report the current marker measurements. Returns the measurements for the channel to which the marker is assigned. The string begins with a measurement error flag. If the following readings are invalid, this will be set to a non-zero value corresponding to the error number. In this case, the measurements should be ignored. The second value is the measurement at Marker 1 that is displayed in the left window in the graphic display. The third value is the measurement at Marker 2 and matches the number in the right window of the graphic display. The fourth number is either the average power level of the portion of the waveform between the markers or the ratio of the two marker measurement windows as set by **MKAVG**, **MKRATIO**, **MK1-MK2**, **MK2-MK1**, **MIN-MAX**, **MAX-MIN**, or **PK/AVG**. Note that the error flag will not show an error if the delta marker is undefined, but a value of zero will be returned for the delta measurement. In the Watts mode, the numbers are presented in floating point notation with E-09 = nW, E-06 = µW, E-03 = mW, E00 = W, E03 = kW.<br><br>Example (dBm ratio): 0, -12.34, 19.88, 32.22<br>Example (Watts ratio): 0, 58.34E-06, 97.24E-03, 166700% |

## Table 5-3 Model 4400A/4500A Talk Mode Bus Mnemonics *(continued)*

| Code | Arg | [Equivalent Keystrokes] |
|---|---|---|
| **TKMKT** | --- | This talk mode will return the position of marker 1 and marker 2 in absolute units, and in pixel position from the left edge. The screen position is always a number between 0 and 500, inclusive. |
| | *Pwr* ➪ | In power mode the absolute marker position is in time relative to the trigger event. |
| | *Stat* ➪ | In stat mode the absolute marker position is in percent. The X-axis and the %Offset must be known to determine the left edge of the display, and thus know the marker position on the screen. |
| | | Power ➪ Example:<br>The instrument is setup with a 50 µsec timebase. Trigger position is center, Trigger Delay is 0 and Marker 1 set to -10 µsec. Marker 2 set to +60 µsec.<br>-10E-6, 60E-6, 248, 261 |
| **TKRLMEAS** | --- | Sends reference line measurements over the bus in the following format:<br>error code, % of power at ref line 1, % of power at ref line 2, absolute delta % between ref line 1 and ref line 2. |
| | *Stat* ➪ | |

| Error code | Description |
|---|---|
| 0 | valid measurements |
| 1 | invalid measurements<br>-.01% indicates under range<br>-.02% indicates over range |
| 2 | invalid measurements<br>instrument not in stat mode |

| | | |
|---|---|---|
| **TKSDATA** | --- | Sends the sensor data of the sensor connected to the currently selected channel.<br>Format: Format type, sensor type, month of manufacture, day of manufacture, year of manufacture, serial number, month of calibration, day of calibration, year of calibration, attenuation, impedance, pulse power bottom of range, pulse power top of range, CW bottom of range, CW top of range. |
| **TKSETUP** | --- | In the power mode this talk mode will report the current setup of the instrument. It is intended to be executed after the AUTOSET command. The AUTOSET initiates an auto-setup procedure to begin. The TKSETUP will return all values which are changed by this procedure. This routine is not limited to this function and can be executed at any time. |
| | *Pwr* ➪ | |
| | | Example: After AUTOSET execute a TKSETUP<br>CH1 Log Vertical Scale (dB), CH1 Log Vertical Center (dB), CH1 Linear Vertical Scale (W), CH1 Lin Offset (Div), CH2 Log Vertical Scale (dB), CH2 Log Vertical Center (dB), CH2 Linear Vertical Scale (W), CH2 Lin Offset (Div), Timebase (sec), Trigger Holdoff (sec), Trigger Level (dB or Volts; see trigger source), Trigger Source (1 or 2 for Channel), Trigger Delay (sec), Trigger Position (0-Left 1-Center 2-Right)<br><br>20,0.00,20E-3,0.00,20,0.00,20E-3,0.00,50E-6,0.00E-6,0.00,1,0E-6,1 |

## Table 5-3 Model 4400A/4500A Talk Mode Bus Mnemonics *(continued)*

| Code | Arg | [Equivalent Keystrokes]<br>Function |
|---|---|---|
| | *Stat* ⇨ | In the stat mode the X-AXIS and %OFFSET is returned instead of timebase data.<br><br>Example of stat mode TKSETUP ouput:<br>CH1 log vertical scale (db), CH1 log vertical center (db),<br>CH1 linear vertical scale (W), CH1 lin offset (Div),<br>CH2 log vertical scale (db), CH2 log vertical center (db),<br>CH2 linear vertical scale (W), CH2 lin offset (Div),<br>X-axis (%/Div), %Offset (%) |
| **TKSFAST** | --- | Sends the sensor frequency correction data for the high bandwidth setting of the sensor connected to the currently selected channel.<br><br>Format: Count, bottom of frequency range, top of frequency range, Freq0, CF0, Freq1, CF1,.... "Count" refers to the count of numbers, including the bottom and top of the frequency range and each Freq*n* and CF*n* separately. The maximum count is 124 numbers or 60 frequency points. Frequencies are valid if they lie within the specified frequency range and conform to a format of ##.## (Implied unit: GHz). CF range is ± 3.00 (Implied unit: dB). |
| **TKSMSG** | --- | Sends the sensor message (up to 255 characters, with CR and LF.) |
| **TKSSLOW** | --- | Sends the sensor frequency correction data for the low bandwidth setting of the sensor connected to the currently selected channel.<br><br>Format: Count, bottom of frequency range, top of frequency range, Freq0, CF0, Freq1, CF1,.... "Count" refers to the count of numbers, including the bottom and top of the frequency range and each Freq*n* and CF*n* separately. The maximum count is 124 numbers or 60 frequency points. Frequencies are valid if they lie within the specified frequency range and conform to a format of ##.## (Implied unit: GHz). CF range is ± 3.00 (Implied unit: dB). |
| **TKTEMP** | --- | Sends the sensor temperature (in degrees C) for both channels.<br><br>Format: CH1 flag, CH1 temp, CH2 flag, CH2 temp<br>Flag is 0 if sensor is connected, 1 if no sensor is connected, and 2 if no channel card is present. |
| **TKUNITS** | --- | Same as **TKMEAS**, except the measurement values are followed by the units strings.<br>If the delta marker is undefined, its units will be returned as "N/A".<br><br>Example (dBm avg): 0, -12.34 dBm, 19.88 dBm, 10.52 dB<br>Example (watts avg): 0, 58.34 µW, 97.24 mW, 11.29 mW |
| ***CAL?** | --- | [*Chan* > *Calibration* > *Zeroing* ---]<br>(Only applies in the CW mode.) Same as zeroing the instrument, however, the Model 4500 will talk an error string for the next Talk message, then return to the previous Talk mode. |

**Table 5-3 Model 4400A/4500A Talk Mode Bus Mnemonics** *(continued)*

| Code | Arg | [Equivalent Keystrokes] Function |
|---|---|---|
| ***IDN?** | --- | Places the instrument in the Talk instrument ID mode. If this is the last Talk mode command in a command string, the next response will be an ID string. After it has talked once, the instrument will resume the previous Talk mode.<br><br>Format:<br>BEC, 4500A, [Serial Number], [Firmware Revision Code] |
| ***OPT?** | --- | [*Util > Inst Report* ]<br>Places the instrument in the Talk Options mode. If this is the last Talk command in a command string, the next response will be the installed options string. The instrument will return to the previous Talk mode.<br><br>Format: 0 = not present; 1 = installed<br>[CH 1], [Sensor on CH 1], [CH 2], [Sensor on CH 2]<br><br>Example: 1, 1, 0, 0. Channel 1 is installed with sensor; Channel 2 is not installed. A sensor cannot be detected if no channel is present. |
| ***SRE?** | --- | [*Util > IEEE-488 > SRQ Mask* ]<br>Places the instrument in the Talk SRQ Mask mode. If this is the last Talk command in a command string the next response will be the SRQ Mask value. The instrument will return to the previous Talk mode. |
| ***TST?** | --- | [*SPCL > Servicing > Selfcheck*]<br>Runs the internal self-test. This is equivalent to the test done on power-up, and as part of initialization. After the self-test has executed, the instrument will talk a single error status string with the test result, then return to the previous talk mode. See **TKERR** for the status string format. |

## 5.4 SRQ Operation

### Using "Service Request"

The Service Request allows the Model 4400A/4500A to inform the bus controller that some special event has occurred. The instrument then expects the controller to perform a serial poll to find out what event has occurred. The events that can be selected to generate service requests are Instrument Error, Measurement is Ready, Zeroing is Complete, Calibration is Complete, and Auto Set-up is Complete.

Each of these options can be individually enabled or disabled with the SRQ mask. The default setting for the mask is with all SRQs disabled. They can only be enabled over the bus by setting the appropriate bits high in the SRQ mask using the *SRE mnemonic. See Table 5-4.

Frequently, in small systems only one instrument is capable of using SRQ. In this situation there is no need to execute a serial poll, since the identity of the requesting device is known. The error codes may be obtained directly from the talk error **(TKERR)** mode. The SRQ line can then be cleared by sending the clear **(*CLR)** command.

## SRQ Operation

Each active bit of the IEEE-488 bus serial poll byte signals a specific function, as listed in Table 5-4. Each function listed in the table is individually enabled and disabled. The SRQ Enable function **(*SRE)** is used to enter the SRQ mask with each bit AND-ed with the internal SRQ request. Only active functions will generate a serial poll request.

**Example:** Enable SRQ after *AutoCal*.

***SRE 16**
After *AutoCal*, an SRQ is generated, the front panel SRQ annunciator lights, and the bus controller can perform a serial poll.

Value returned is 80 (50h). Bit 6 is set, indicating that the Model 4400A/4500A has requested service. Bit 4 is set, indicating that an *AutoCal* or zero cycle has been completed.

SRQ on measurement ready is bit position 1. By performing a logical "OR" operation with a value of 2 and the SRQMask, the instrument will assert the SRQ line on the IEEE-488 interface, and light the SRQ annunciator on the front panel when the measurement is ready.

The instrument determines when the measurement is ready by the amount of data that must be captured to generate an averaged reading. The length of time required is related to the number of averages, timebase, and the trigger rate. When two channels are active the larger of the two averaging values is used. A special case is when the averaging is set to one. In this case the SRQ is active as soon as all points on the waveform have a valid data point.

**Note**

When using this mode the CLRSCR bus command should always be used to clear out old data. This command will clear the 1 bit in the SRQ register but will not clear the SRQ request. This allows the 1 bit to always correctly indicate that valid data is available. Any SRQ service routine must support the case where the instument requests service, but when the controller polls the instrument only bit 6 is active. Bit 6 indicates that this is the instrument that requested service. This polling will clear the SRQ request and the controller can return to normal program operation.

| Table 5-4. SRQ Mask, Bit Assignments | | | |
|---|---|---|---|
| **Bit Position** | **Bus Code** | | **Function** |
| | **Hex** | **Decimal** | |
| 0 | 01h | 01 | An error has been generated. |
| 1 | 02h | 02 | Measurement ready. |
| 2 | | | Inactive. |
| 3 | 8h | 08 | Auto Set-up cycle is complete. |
| 4 | 10h | 16 | *AutoCal* cycle or zeroing cycle is complete. |
| 5 | 20h | 32 | Plotter transmission is complete. |
| 6 | 40h | 64 | Addressed device is requesting service. |
| 7 | 80h | 128 | Service request was generated from the keyboard. |

**Bus Command Responses**

IEEE-488 bus commands are sent by the controller to all devices on the bus (Universal Command Group) or to addressed devices, only (Addressed Command Group). The response of the instrument is listed in Table 5-5. All unlisted commands are ignored.

| Table 5-5. Bus Command Responses | |
|---|---|
| **Command** | **Response** |
| **Universal Command Group** | |
| Device Clear (DCL) | Clear errors. |
| Local Lockout (LLO) | Disable LCL/init key. |
| Serial Poll Enable (SPE) | Set Talk mode for poll response. |
| Serial Poll Disable (SPD) | Disable serial poll response. |
| **Addressed Command Group** | |
| Selected Device Clear (SDC) | Same as device clear. |
| Go to Local (GTL) | Returns front panel control. |

# 6

# Application Notes

This section provides supplementary material to enhance your knowledge of Model 4400A/4500A operation, advanced features and measurement accuracy. Topics covered in this section include pulse measurement fundamentals, automatic measurement principles, and an analysis of measurement accuracy.

## 6.1 Introduction to Pulse Measurements

### Power Measurements

The following is a brief review of power measurement fundamentals.

**Unmodulated Carrier Power.** The average power of an unmodulated carrier consisting of a continuous, constant amplitude sinewave signal is also termed CW power. For a known value of load impedance R, and applied voltage Vrms, the average power i s:

$$P = \frac{Vrms}{R}^{2} \quad watts$$

Power meters designed to measure CW power can use thermoelectric detectors which respond to the heating effect of the signal or diode detectors which respond to the voltage of the signal. With careful calibration accurate measurements can be obtained over a wide range of input power levels.

**Modulated Carrier Power.** The average power of a modulated carrier which has varying amplitude can be measured accurately by a CW type power meter with a thermoelectric detector, but the lack of sensitivity will limit the range. Diode detectors can be used at low power, square-law response levels. At higher power levels the diode responds in a more linear manner and significant error results.

**Pulse Power.** Pulse power refers to power measured during the on time of pulsed RF signals (Figure 6-1). Traditionally, these signals have been measured in two steps: (1) thermoelectric sensors measure the average signal power, (2) the reading is then divided by the duty cycle to obtain pulse power, $P_{pulse}$:

$$P_{pulse} = \frac{Average\ Power}{Duty\ Cycle}\ (measured)$$

where $Duty\ Cycle = \frac{Pulse\ Width}{Pulse\ Period}$

Pulse power provides useful results when applied to rectangular pulses, but is inaccurate for pulse shapes that include distortions, such as overshoot or droop (Figure 6-2).

Figure 6-1.
Pulsed RF Signal

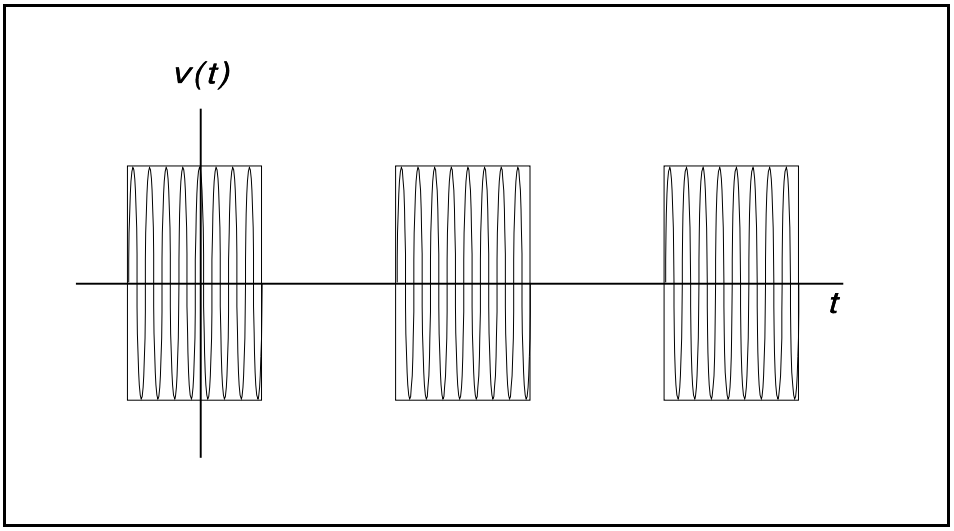


Figure 6-2.
Distorted Pulse Signal

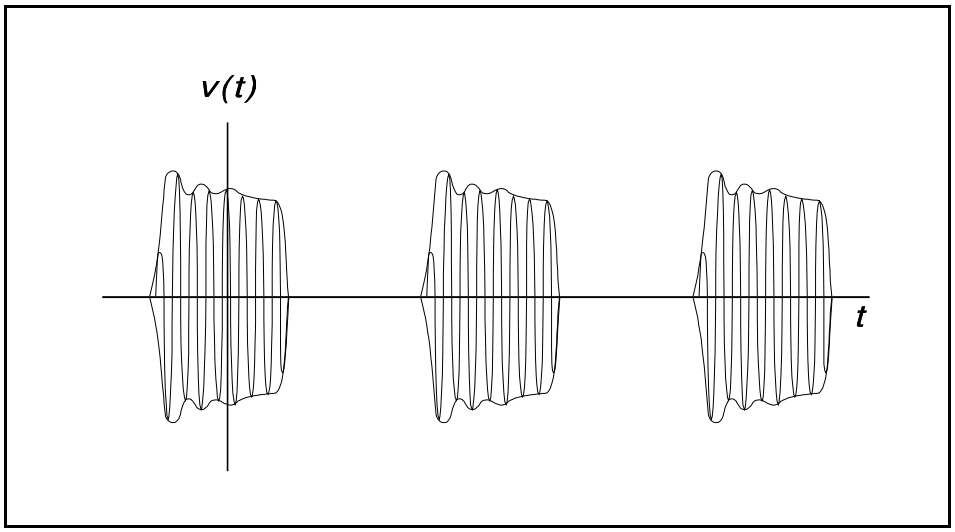


**Peak Power.** The Model 4400A/4500A makes power measurements in a manner which overcomes the limitations of the pulse power method and provides both peak power and average power readings for all types of modulated carriers. The fast responding diode sensors detect the RF signal to produce a wideband video signal which is sampled with a narrow sampling gate. The video sample levels are accurately converted to power on an individual basis at up to a 1 MSa/sec rate. Since this power conversion is correlated to the sensor pre-calibration table, these samples can be averaged to yield average power without restriction to the diode square-law region. In addition, if the signal is repetitive, the signal envelope can be reconstructed using an internal or external trigger. The envelope can be analyzed to obtain waveshape parameters including, pulse width, duty cycle, overshoot, risetime, falltime and droop.
In addition to time domain measurements and simple averaging, the Model 4500A has additional capabilities which allow it to perform statistical, histogram type analyses on a complete set of continuously sampled data points. Data can be viewed and characterized using CDF, 1-CDF and PDF presentation formats. These analysis tools provide invaluable information about peak power levels and their frequency of occurrence, and are especially useful for non-repetitive signals such as HDTV and CDMA.

## Diode Detection

Wideband diode detectors are the dominant power sensing device used to measure pulsed RF signals. However, several diode characteristics must be compensated to make meaningful measurements. These include the detector's nonlinear amplitude response, temperature sensitivity, and frequency response characteristic. Additional potential error sources include detector mismatch, signal harmonics and noise.

**Detector Response.** The response of a single-diode detector to a sinusoidal input is given by the diode equation:

$$i = I_s\left(e^{\alpha v} - 1\right)$$

where:

$i$ = diode current
$v$ = net voltage across the diode
$I_s$ = saturation current
$\alpha$ = constant

An ideal diode response curve is plotted in Figure 6-3.

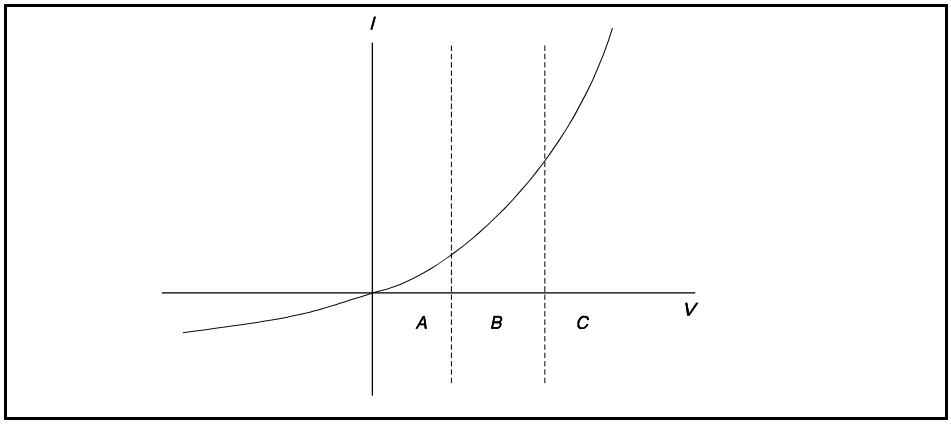


Figure 6-3.
Ideal Diode Response

The curve indicates that for low microwave input levels (Region A), the single-diode detector output is proportional to the square of the input power. For high input signal levels (Region C), the output is linearly proportional to the input. In between these ranges (Region B), the detector response lies between square-law and linear.

For accurate power measurements over all three regions illustrated in Figure 6-3, the detector response is pre-calibrated over the entire range. The calibration data is stored in the instrument and recalled to adjust each sample of the pulse power measurement.

**Temperature Effects**. The sensitivity of microwave diode detectors (normally Low Barrier Schottky diodes) varies with temperature. However, ordinary circuit design procedures that compensate for temperature-induced errors adversely affect detector bandwidth. A more effective approach involves sensing the ambient temperature during calibration and recalibrating the sensor when the temperature drifts outside the calibrated range.

**Frequency Response.** The carrier frequency response of a diode detector is determined mostly by the diode junction capacitance and the device lead inductances. Accordingly, the frequency response will vary from detector to detector and cannot be compensated readily. Power measurements must be corrected by constructing a frequency response calibration table for each detector.

**Mismatch.** Sensor impedance matching errors can contribute significantly to measurement uncertainty, depending on the mismatch between the device under test (DUT) and the sensor input. This error cannot be calibrated out, but can be controlled by employing an optimum matching circuit at the sensor input.

**Signal Harmonics.** Measurement errors resulting from harmonics of the carrier frequency are level-dependent and cannot be calibrated out. In the square-law region of the detector response (Region A, Figure 6-3), the signal and second harmonic combine on a root mean square basis. The effects of harmonics on measurement accuracy in this region are relatively insignificant. However, in the linear region (Region C, Figure 6-3), the detector responds to the vector sum of the signal and harmonics. Depending on the relative amplitude and phase relationships between the harmonics and the fundamental, measurement accuracy may be significantly degraded.

Errors caused by even-order harmonics can be reduced by using balanced diode detectors for the power sensor. This design responds to the peak-to-peak amplitude of the signal, which remains constant for any phase relationship between fundamental and even-order harmonics. Unfortunately, for odd-order harmonics, the peak-to-peak signal amplitude is sensitive to phasing, and balanced detectors provide no harmonic error improvement.

**Noise.** For low-level signals, detector noise contributes to measurement uncertainty and cannot be calibrated out. Balanced detector sensors improve the signal-to-noise ratio by 3 dB, because the signal is twice as large.

## Model 4400A/4500A Features

The Model 4400A/4500A design incorporates several significant features to reduce measurement error, simplify operation, and speed internal processing. These features include:

- *Balanced diode sensors* enhance error performance by increasing signal-to-noise and suppressing even-order signal harmonics.
- *Random sampling* achieves wide measurement bandwidth at relatively low sampling speeds. Waveforms can be displayed for repetitive signals when the trigger event is stable.
- *Smart Sensors* (sensor-mounted EEPROM) store sensor frequency calibration data, eliminating operator entry.
- A *Floating Point Digital Signal Processor* which provides high speed processing for near real-time measurements.
- *A built-in programmable calibrator* which creates a unique calibration table for each sensor.

## 6.2 Pulse Definitions

IEEE Std 194-1977 Standard Pulse Terms and Definitions "provides fundamental definitions for general use in time domain pulse technology." Several key terms defined in the standard are reproduced in this subsection, which also defines the terms appearing in the Model 4400A/4500A text mode display of automatic measurement results.

**Standard IEEE Pulse Definitions**

The key terms defined by the IEEE standard are abstracted and summarized below. These terms are referenced to the standard pulse illustrated in Figure 6-4.

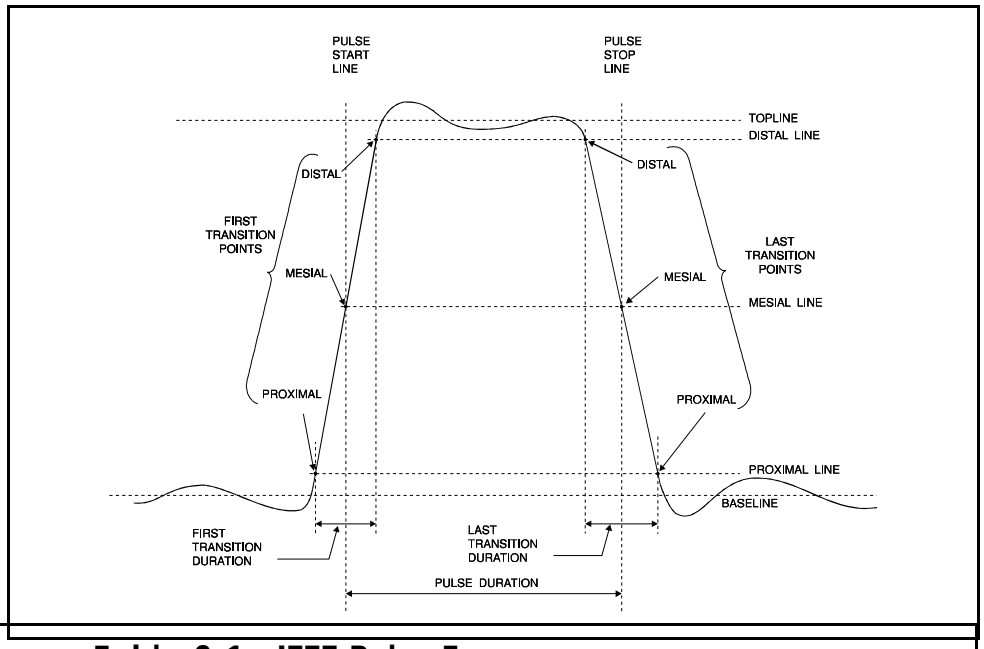


Figure 6-4.
IEEE Standard Pulse

**Table 6-1. IEEE Pulse Terms**

| TERM | DEFINITION |
|---|---|
| Base Line | The two portions of a pulse waveform which represent the first nominal state from which a pulse departs and to which it ultimately returns. |
| Top Line | The portion of a pulse waveform which represents the second nominal state of a pulse. |
| First Transition | The major transition of a pulse waveform between the base line and the top line (commonly called the rising edge). |
| Last Transition | The major transition of a pulse waveform between the top of the pulse and the base line. (Commonly called the falling edge.) |
| Proximal Line | A magnitude reference line located near the base of a pulse at a specified percentage (normally 10%) of pulse magnitude. |

| Table 6-1. IEEE Pulse Terms *(continued)* | |
|---|---|
| **TERM** | **DEFINITION** |
| Distal Line | A magnitude reference line located near the top of a pulse at a specified percentage (normally 90%) of pulse magnitude. |
| Mesial Line | A magnitude reference line located in the middle of a pulse at a specified percentage (normally 50%) of pulse magnitude. |

**Automatic Measurement Terms**

The following terms appear in the Model 4500A text display in power mode.

| Table 6-2. Automatic Measurement Terms | |
|---|---|
| **TERM** | **DEFINITION** |
| Pulse Width | The interval between the first and second signal crossings of the mesial line. |
| Risetime | The interval between the first signal crossing of the proximal line to the first signal crossing of the distal line. |
| Falltime | The interval between the last signal crossing of the distal line to the last signal crossing of the proximal line. |
| Pulse Period | The interval between two successive pulses. (Reciprocal of the Pulse Repetition Frequency) |
| Pulse Repetition Frequency | The number of cycles of a repetitive signal that take place in one second. |
| Duty Cycle | The ratio of the pulse on-time to off-time. |
| Off-time | The time a repetitive pulse is off. (Equal to the pulse period minus the pulse width) |
| Peak Power | The maximum power level of the captured waveform. |
| Pulse Power | The average power level across the pulse width, defined by the intersection of the pulse rising and falling edges with the mesial line. |
| Overshoot | A distortion following a major transition. (The difference between the maximum amplitude of the overshoot and the top line). |
| Average Power | The equivalent heating effect of a signal. |

| Table 6-2. Automatic Measurement Terms *(continued)* | |
|---|---|
| **TERM** | **DEFINITION** |
| Top Amplitude | The amplitude of the top line. (See IEEE definitions) |
| Bottom Amplitude | The amplitude of the base line. (See IEEE definitions) |
| Delay | The time between a pulse on Channel 1 and Channel 2. The pulse can be the power or trigger signal. |

## 6.3 Automatic Measurements

The Model 4400A/4500A automatically analyzes the waveform data in the buffers and calculates key waveform parameters. The calculated values are displayed in text mode when you press the **TEXT/GRAPH** system key.

### Automatic Measurement Criteria

Automatic measurements are made on repetitive signals that meet the following conditions:

- *Amplitude*. The difference between the top and bottom signal amplitudes must exceed 6 dB to calculate waveform timing parameters (pulse width, period, duty cycle). The top-to-bottom amplitude difference must exceed 13 dB to measure rise and falltime.

- *Timing*. In order to measure pulse repetition frequency and duty cycle, there must be at least three signal transitions. The interval between the first and third transition must be at least $1/5$ of a division ($1/50$ of the screen width). For best accuracy on rise and falltime measurements, the timebase should be set so the transition interval is at least one- half division on the display.

### Automatic Measurement Sequence

The automatic measurement process analyzes the captured signal data in the following sequence:

1. Approximately 500 samples of the waveform (equivalent to one screen width) are scanned to determine the maximum and minimum sample amplitudes.

2. The difference between the maximum and minimum sample values is calculated and stored as the Signal Amplitude.

3. The Transition Threshold is computed as one-half the sum of the maximum and minimum sample amplitudes.

4. The processor locates each crossing of the Transition Threshold.

5. Starting at the left edge of the screen, the processor classifies each Transition threshold crossing according to whether it is positive-going (-+) or negative-going (+-). Because the signal is repetitive, only three transitions are needed to classify the waveform, as follows:

| Type | Sequence | Description |
|---|---|---|
| 0 | —- | No crossings detected |
| 1 | —- | Not used |
| 2 | +- | One falling edge |
| 3 | -+ | One rising edge |
| 4 | +-+ | One falling, followed by one rising edge |
| 5 | -+- | One rising, followed by one falling edge |
| 6 | +-+- | Two falling edges |
| 7 | -+-+ | Two rising edges |

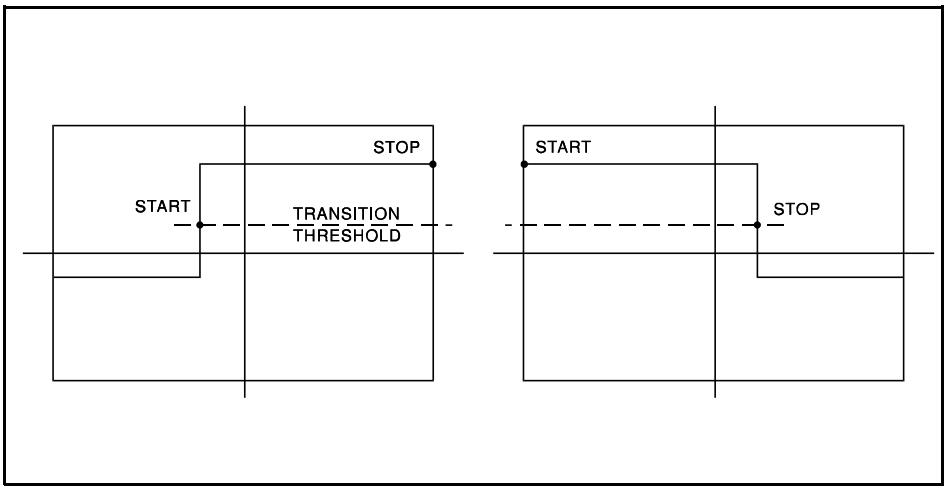


Figure 6-5.
Step Waveforms

6. If the signal is Type 0, (No crossings detected) no measurements can be performed and the routine is terminated, pending the next reload of the data buffers.

7. The process locates the bottom amplitude (baseline) using the IEEE histogram method. A histogram is generated for all samples in the lowest 12.8 dB range of sample values. The range is subdivided into 64 power levels of 0.2 dB each. The histogram is scanned to locate the power level with the maximum number of crossings. This level is designated the baseline amplitude. If two or more power value have equal counts, the lowest is selected.

8. The process follows a similar procedure to locate the top amplitude (top line). The power range for the top histogram is 5 dB and the resolution is 0.02 dB, resulting in 250 levels. The level-crossing histogram is computed for a single pulse, using the samples which exceed the transition threshold. If only one transition exists in the buffer (Types 2 and 3), the process uses the samples that lie between the edge of the screen and the transition threshold (See Figure 6-6).

   For a level to be designated the top amplitude, the number of crossings of that level must be at least $1/16$ the number of pixels in the pulse width; otherwise, the peak value is designated the top amplitude.

9. The process establishes the proximal, mesial, and distal levels as a percentage of the difference between top amplitude and bottom amplitude power. The percentage can be calculated on a power or voltage basis. The proximal, mesial, and distal threshold values are user settable from 1% to 99%, with the restriction that the proximal < mesial < distal. Normally, these values will be set to 10%, 50% and 90%, respectively.

Figure 6-6.
Time Interpolation

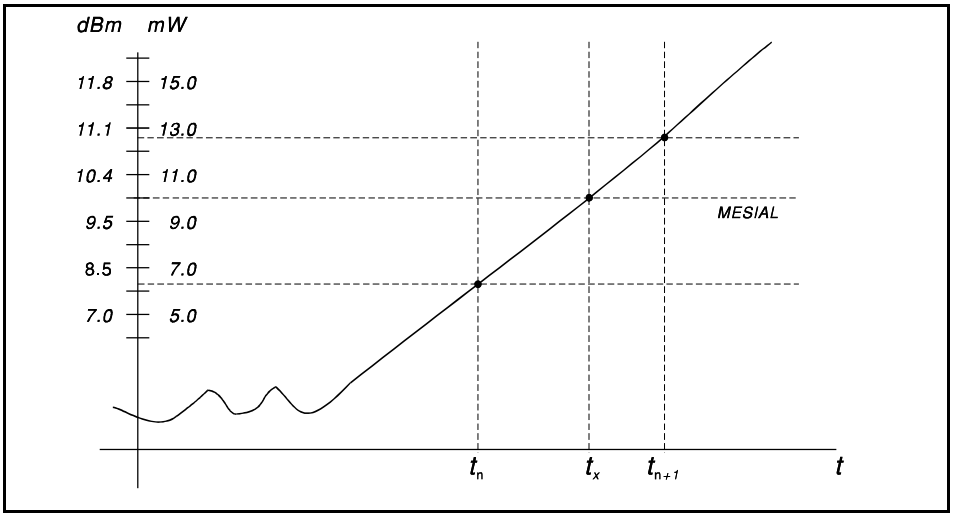


10. The process determines horizontal position, in pixels, at which the signal crosses the mesial value. This is done to a resolution of 0.1 pixel, or 1⁄5000 of the screen width. Ordinarily, the sample values do not fall precisely on the mesial line, and it is necessary to interpolate between the two nearest samples to determine where the mesial crossing occurred. This process is demonstrated in the above example (Figure 6-6):

| Item | dBm | mW |
|---|---|---|
| Mesial value | 10.0 | 10.0 |
| Sample n | 8.0 | 6.3 |
| Sample n+1 | 11.0 | 12.6 |

The interpolated crossing time, $t_x$, is calculated from:

$$t_x = t_n + \frac{P_{mes} - P_n}{P_{n+1} - P_n}$$

where P is in watts and n is the number of the sampling interval, referenced to the trigger event. For this example

$$t_x = t_n + \frac{10.0 - 6.3}{12.6 - 6.3}$$

$$= t_n + 0.6$$

11. The processor computes the rise and/or falltimes of waveforms that meet the following conditions:

    a) The waveform must have at least one usable edge (Types 2 through 7).

    b) The signal peak must be at least 13 dB greater than the minimum sample value.

The risetime is defined as the time between the proximal and distal crossings (-+). The falltime is defined as the time between the distal and proximal crossings (+-).

If no samples lie between the proximal and distal values for either edge (rise or fall), the risetime for that edge is set to 0 seconds.

12. The processor calculates the output values according to the following definitions:

| | | |
|---|---|---|
| a.) | Pulse Width | Interval between mesial points |
| b.) | Risetime | See Step 11 |
| c.) | Falltime | See Step 11 |
| d.) | Period | Cycle time between mesial points |
| e.) | Pulse Repetition Frequency | Reciprocal of Period |
| f.) | Duty Cycle | $\frac{\text{Pulse Width}}{\text{Period}}$ |
| g.) | Off-time | (Period) - (Pulse Width) |
| h.) | Peak Power | Maximum sample value (See Step 1) |
| i.) | Pulse Power | Average power in the pulse (between the mesial points) |
| j.) | Overshoot | (Peak Power) - (Top Amplitude) |
| k.) | Average Power | See Step 13 |
| l.) | Top Amplitude | See Step 8 |
| m.) | Bottom Amplitude | See Step 7 |
| n.) | Delay | See Step 14 |

## Average Power Over an Interval

13. The average power of the signal over a time interval is computed by:

a.) summing the sample powers in the interval

b.) dividing the sum by the number of samples

This process calculates Pulse Power, Average Power and the average power between markers.

Since each sample represents the power in a finite time interval, the endpoints are handled separately to avoid spreading the interval by one-half pixel at each end of the interval (See Figure 6-7). For the interval in Figure 6-7, the average power is given by:

$$P_{ave} = \tfrac{1}{2}(P_o + P_n) + \frac{1}{(n-1)} \sum_{n=1}^{n-1} P_n$$

Figure 6-7

Sampling Intervals

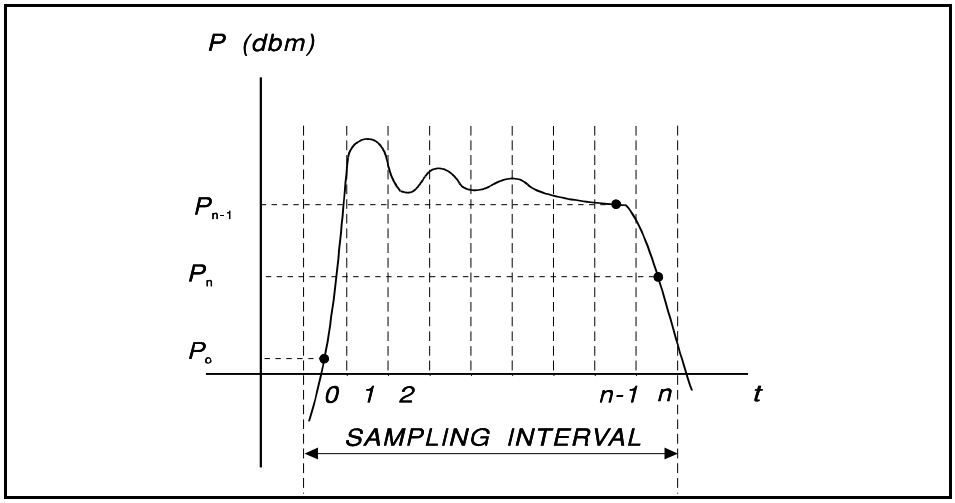


14. The processor calculates the delay between the two measurement channels. The time reference for each channel is established by the first signal crossing (starting from the left edge of the screen) which passes through the mesial level (or 50% point in trigger view). The signal excursion must be at least 6 dB in power mode, or 300 mV in trigger-view mode.

## 6.4 Statistical Mode Automatic Measurements (Model 4500A only)

When operating In statistical mode, the 4500A has a unique text format display that is available when the TEXT/GRAPH system key is pressed. A sample of is shown in Figure 6.8.

Figure 6-8

Statistical Mode Text Display (Model 4500A)

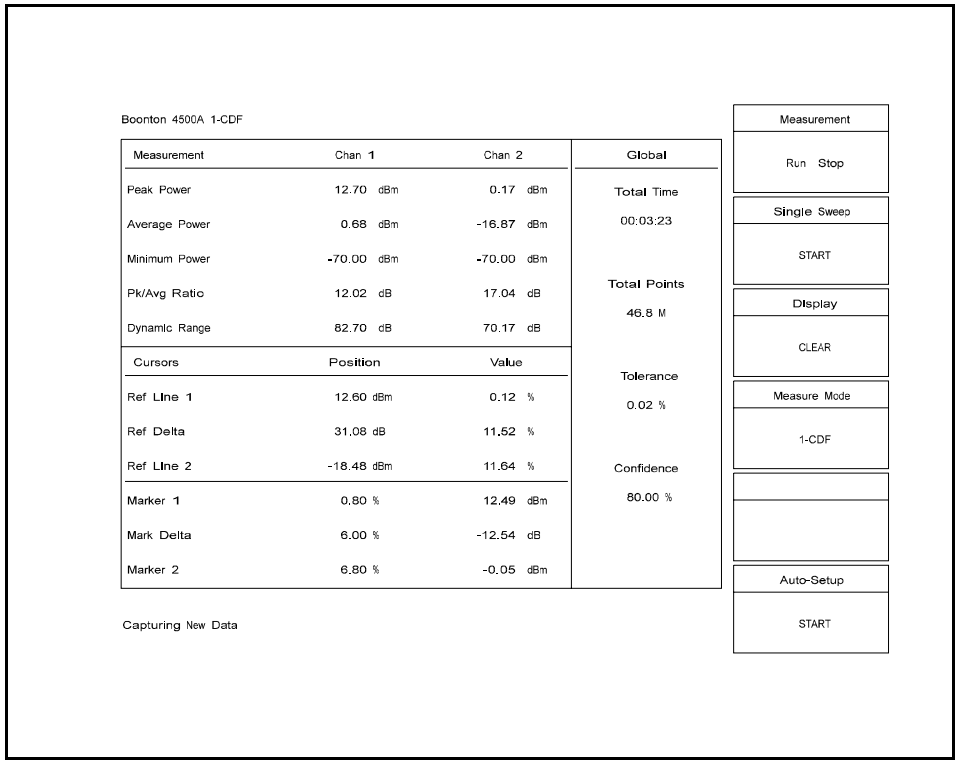

The following five automatic measurements are displayed for both input channels:

1. Peak Power: The highest power sample occuring since acquisition was started.

2. Average Power: The unweighed average of all power samples occuring since acquisition was started.

3. Minimum Power: The lowest power sample occuring since acquisition was started.

4. Pk/Avg Ratio: The ratio (in dB) of the Peak Power to the Average Power.

5. Dynamic Range: The ratio (in dB) of the Peak Power to the Minimum Power.

The following six cursor measurements display the set position and measured value where the movable cursor intersects the measurement trace. Note that the markers are undefined in PDF presentation format, and Reference Lines are undefined when *Disp > Units* is set for Linear. The position and value text for each marker or reference line will be displayed with the color of the assigned channel for that particular cursor.

1. Ref Line 1: Measures the CDF (or 1-CDF) % at the power level where reference line 1 intersect the assigned trace. *Note that if the intersection falls outside the horizontal screen extents, the measured value will be clipped to % values within the horizontal axis For this reason, avoid zooming in horizontally with Time > X-Axis if you wish to make Reference line measurments.*

2. Ref Delta: Displays the ratio (in dB) of the Ref Line 1 and Ref Line 2 power levels and the difference (in %) between their values.

3. Ref Line 2: See *Ref Line* 1, above.

4. Marker 1: Measures the power level at the selected %CDF (or 1-CDF). Note that marker positions are rounded to the nearest pixel positions (1/50th of a division), so for precise power measurements at very high or low % positions, it may be necessary to zoom in horizontally with *Time > X-Axis*.

5. Mark Delta: Displays the difference (in %) between the marker positions and the ratio (in dB for log mode, % of linear) of their power levels.

6. Marker 2:See *Marker 1*, above.

The following four global status values are displayed:

1. Total Time: The total time in Hours:Minutes:Seconds that the data acquisition has been running.

2. Total Points: The total number of data samples that has been acquired for each channel in the current run. Sample rate is approximately 500kSa/sec if Channel 1 is running alone, and 250kSa/sec if Channel 2 is turned on.

3. Tolerance: The statistical tolerance of the acquired data set based on the number of samples taken and the desired confidence factor.

4. Confidence: A display of the confidence factor, set by *Meas > Confidence*.

## 6.5 Measurement Accuracy

The Model 4400A/4500A includes an internal calibrator that is traceable to the National Institute for Standards and Technology (NIST). When maintained according to the recommendations in Chapter 7, the calibrator enables you to make highly precise measurements of CW and pulsed signals. The following error analysis assumes that the calibrator is being maintained according to these recommendations.

Measurement uncertainties are attributable to the calibrator, sensor, and impedance mismatch between the sensor and the device under test (DUT). Individual independent contributions from each of these sources are combined mathematically to quantify the upper error bound and the probable error. The upper bound is calculated by adding all the contributions linearly. The probable error is obtained by combining the sources on a root-sum-square (rss) basis.

### Error Contributions

**Calibrator Level Uncertainty.** The specified level accuracy for calibrators that are maintained in current calibration is:

| Range | Error ($\varepsilon_{cl}$) |
|---|---|
| At 0 dBm | $\pm$ 0.065 dB |
| Per 10 dB above/below 0 dBm (-30 to +20 dBm) | + 0.06 dB |

**Calibrator Mismatch Uncertainty.** Mismatch between the calibrator and the sensor introduces an error, $\varepsilon_{cm}$, given by:

$$\varepsilon_{cm} = \pm 2 \ x \ \rho_s \ x \ \rho_c \ x \ 100\%$$

where $\rho_s$ = Sensor reflection coefficient
$\rho_c$ = Calibrator reflection coefficient

**Source Mismatch Uncertainty.** Mismatch between the sensor and the device under test causes an error, $\varepsilon_{sm}$, in the device level reading. This error is given by:

$$\varepsilon_{sm} = \pm 2\ \rho_s\ x\ \rho_d\ x\ 100\%$$

where $\rho_d$ = DUT reflection coefficient

**Sensor Shaping Error**. This factor refers to the non-linearity of the sensor after *AutoCal* is run. Calibration is performed at discrete levels and is extended to all levels.

**Sensor Temperature Coefficient.** An error occurs when the sensor temperature is significantly different from the calibrated sensor temperature. This condition is detected by the Model 4500 and a message warns the operator to recalibrate the sensor, eliminating this error.

**Noise and Drift.** The noise contribution to pulse measurements depends on the number of samples averaged to produce the power reading. Drift affects CW measurements and is controlled by zeroing the meter before measuring. The specifications for each sensor list the noise contribution for 100-sample averaging (applicable to pulse measurements) and the drift contribution, after zeroing, for 10-sample averaging (applicable to CW measurements).

**Sensor Calibration Factor Uncertainty.** The sensor specifications tabulate the uncertainties that apply to the frequency calibration data stored in the EEPROM. Both worst case and rss uncertainties are provided for the frequency range covered by each sensor.

## Typical Measurement Error Calculations

Case 1: High-Level Sample

This example error calculation assumes the following measurement conditions:

| | |
|---|---|
| Source Frequency | 2 GHz |
| Source Peak Power | +5 dBm |
| Source SWR 1.5 ($\rho_d = 0.200$) | |
| Sensor Type | Model 56318 |

The measurement error is calculated as follows:

**Calibrator Level Uncertainty**

a. *Worst-case*. For sample levels between 0 and ± 10 dBm, the worst-case error contribution is the sum of the calibrator level uncertainties at 0 dBm and one signal level increment:

$$\varepsilon_{clw} = \pm(0.065 + 0.06) = 0.125 \text{ dB}$$

To convert the 0.125dB uncertainty to percent uncertainty:

$$\varepsilon_{cl}r\ (\%) = (\pm 10^{\varepsilon_{cl}w/10} - 1) \times 100\%$$
$$= (\pm 10^{0.0125} - 1) \times 100\%$$
$$= \pm 2.9\%$$

b. *RSS*. The probable error contribution due to calibration level uncertainty is the rss combination of the uncertainties at 0 dBm and one signal level increment:

$$(10^{0.065/10} - 1) \times 100 = 1.5\%$$
$$(10^{0.06/10} - 1) \times 100 = 1.4\%$$
$$\varepsilon_{cl}\ (\%) = \sqrt{1.5^2 + 1.4^2}$$
$$= \pm 2.0$$

**Calibrator Mismatch Uncertainty**

$$\varepsilon_{cm} = \pm 2 \times \rho s \times \rho c \times 100\%$$
$$= \pm 2\ (0.070)\ (0.09) \times 100\%$$
$$= \pm 1.3\%$$

**Source Mismatch Uncertainty**

$$\varepsilon_{cm} = \pm 2 \times \rho s \times \rho d \times 100\%$$
$$= \pm 2\ (0.070)\ (0.200) \times 100\%$$
$$= \pm 2.8\%$$

Sensor Shaping Error. From the specifications for the Model 56318 sensor:

$$\varepsilon_{sh} = \pm 1.2\%$$

**Sensor Temperature Coefficient**. It is assumed that the sensor has been recently calibrated and the temperature drift is within the calibrated range. The temperature error is negligible.

**Noise and Drift**. Assuming the Model 4500 averaging parameter is set to 100 or more, the noise contribution is 4 $\mu W$ (from sensor specifications), which is negligible compared to the +5 dBm (3162 $\mu W$) signal level.

**Sensor Calibration Factor Uncertainty**. From the Model 56318 sensor specifications, at 2.0 GHz:

$$\varepsilon_{sf} = \pm 3.6\% \text{ worst-case}$$
$$= \pm 2.2\% \text{ rss}$$

**Worst-Case Measurement Uncertainty**.

$$\varepsilon_{wc} = \pm \varepsilon_{clw} \pm \varepsilon_{cm} \pm \varepsilon_{sm} \pm \varepsilon_{sh} \pm \varepsilon_{sf}$$
$$= \pm 2.9 \pm 1.3 \pm 2.8 \pm 1.2 \pm 3.6$$
$$= \pm 11.8\%$$

**Probable Measurement Uncertainty**

$$\varepsilon_{rss} = \pm \sqrt{\varepsilon^2_{clr} + \varepsilon^2_{cm} + \varepsilon^2_{sm} + \varepsilon^2_{sh} + \varepsilon^2_{sf}}$$

$$= \pm\sqrt{2.0^2 + 1.3^2 + 2.8^2 + 2.3^2 + 2.2^2}$$

$$= \pm \sqrt{19.81}$$

$$= \pm 4.45\%$$

<u>Case 2: Low-Level Sample</u>
This example has the same measurement conditions as Case 1, except the sample level is -10 dBm. All error contributions are equivalent to Case 1, except the Noise and Drift component. At a noise level of 4µW, the apparent sample level is the combination of the signal and noise.

$$P_{power} = P_{actual} + P_{noise} = 100 + 4\,uW = 104\,uW$$

The noise error contribution is:

$$\varepsilon_n = \pm\left(\frac{P_{noise}}{P_{actual}}\right) \text{x } 100\% = \pm\left(\frac{4\mu W}{100\mu W}\right) \text{ x } 100\%$$
$$= \pm 4\%$$

## 6.6 Model 4500A Statistical Measurements

Digital modulation methods in which amplitude and phase modulation are combined in a multi-level arrangement to represent a group of bit values from one or more data streams are coming into widespread use. These signals pose new measurement problems, especially at the transmitter. The old concepts of modulation depth and modulation index are not meaningful because the peak to average power ratio of the modulated carrier is a complex function of the data stream content, rather than the amplitude of the modulating signal. The encoding and multiplexing methods used further enhance the noise-like properties of the resulting modulation. All of this suggests the use of statistical measurements to monitor and control the transmitter.

**a. PDF.** The continuous random sampling mechanism of the Model 4500A treats the sensor output as a discrete random variable, Y, and directly forms the PDF or probability distribution function (discrete point-probability). The PDF is a plot of the percentage of time (x-axis) that the power is at a specific value (y-axis). The percentage ranges from 0 to 100%, and the power extends over the entire dynamic range of the 4500A and sensor combination. This directly corresponds to 100 times the probability that the sensor power is equal to y, 100*P [Y=y].

*Y is a discrete random variable with a range equal to all possible sampled values of carrier peak power.*

*y is a specific power value contained in Y.*

PDF is a plot of:

$P(y) = 100 \times P[Y=y]$ *where y ranges over all values in Y*

$0 \leq P(y) \leq 100\%$

As samples are continuously taken, the sample space is rescaled to 100%. This conforms to the requirement that all P(y) add up to 100%.

$\Sigma P(y) = 100\%$ *where y ranges over all values in Y*

The PDF is useful for analyzing the nature of modulating signals. Sustained power levels such as the flat tops of pulses or steps show up as horizontal lines on the graph. Random noise produces a gaussian shaped curve based along the vertical axis.

**b. CDF. A** more useful measurement for transmitter control is the CDF or cumulative distribution function. For the discrete random variable case which applies to our sample data space, the CDF is the probability expressed as a percentage (x-axis) that the power is less than or equal to a specific value (y-axis).

CDF is a plot of:

$Q(y) = 100 \times P[Y \leq y]$ where y ranges over all values in Y
$0 \leq Q(y) \leq 100\%$

and also, just as above,

$\Sigma P(y) = 100\%$

By definition the CDF is non-decreasing in y and the maximum power sample must lie at 100%. The CDF is useful for monitoring and adjusting transmitter power. Suppose there is a requirement that transmitter peak power stay at or below a specific value, y1, 95% of the time. The horizontal reference line representing y1 must intersect the CDF at or to the right of the vertical line at 95% to comply with this requirement. The 4500A also displays the peak, average and peak-to-average ratio along with the CDF graph.

**c. 1-CDF.** It is often convenient to plot the "upper tail area" or 1-CDF instead of the CDF. 1-CDF is the probability expressed as a percentage (x-axis) that the power is greater than a specific power value (y-axis). By definition 1-CDF is non-increasing in y and the maximum power sample must lie at 0%. In the example given above, the horizontal reference line representing y1 must intersect the 1-CDF plot to the left of the vertical line at 5% to comply with the requirement.

**d. Confidence factor and Tolerance.** While the graphical display is continually updated, samples continue to accumulate without decimation until the available memory space is filled at 2.1 billion, 2.1e9, samples. The sampling process is then halted. When a new measurement is started, a graph appears as soon as samples begin to accumulate. A percentage tolerance for statistical error is continually calculated and displayed as samples are accumulated. The tolerance is inversely proportional to the square root of the number of samples taken and increased in relation to the confidence factor chosen. The Model 4500A provides selectable confidence factors from 80% to 99%.

**e. Graphs.** Note that the graphs of PDF, CDF, and 1-CDF are plotted with the independent variable, power, on the vertical axis and the dependent variable, or function value, on the horizontal axis. This differs from the presentation in most texts but is consistent with other Model 4500A graphs.

# 7

# Maintenance

This section presents procedures for maintaining and testing the Model 4400A/4500A. Included are a list of the test equipment needed for equipment maintenance and the procedures for cleaning, inspection, software upgrades, and performance verification.

## 7.1 Safety

Although the Model 4400A/4500A has been designed in accordance with international safety standards, general safety precautions must be observed during all phases of operation and maintenance. Failure to comply with the precautions listed in the Safety Summary located in the front of this manual could result in serious injury or death.
Service and adjustments should be performed only by qualified service personnel.

## 7.2 Cleaning

Painted surfaces can be cleaned with a commercial spray-type window cleaner or a mild detergent and water solution (recommended 1% mild detergent and 99% water).

**Caution**

When cleaning the instrument, do not allow cleaning fluid to enter the air vents. Avoid using chemical cleaning agents which can damage painted or plastic surfaces.

## 7.3 Inspection

If the Model 4400A/4500A malfunctions, perform a visual inspection of the instrument. Inspect for signs of damage caused by excessive shock, vibration, or overheating. Inspect for broken wires, loose hardware and parts, loose electrical connections, or accumulations of dust or other foreign matter.

Correct any problems you discover and conduct a performance test to verify that the instrument is operational (**See Subsection 7.5 Performance Verification.)** If the malfunction persists or the instrument fails the performance verification, contact Boonton Electronics for service.

## 7.4 Software Upgrade

Instrument operating software will be loaded into the Model 4400A/4500A from the diskette drive every time you power up the instrument with a Model 4400A/4500A operating software diskette in the drive. Software should be loaded from diskette only as required to upgrade to a new software release or to perform troubleshooting or repair procedures. You can avoid inadvertently loading software into the instrument by removing the diskette from the drive before turning the instrument on.

**Caution**

When loading new software into the Model 4400A/4500A from the software diskette, all stored instrument configurations and preset operating selections are lost (regardless of software version).

When it is necessary to load software into the Model 4400A/4500A:

1. Turn power off using the front panel ON/SBY switch.

2. Verify that the software diskette is in the *write-protected* state (window open).

3. Orient the diskette label to face the spin knob. Insert the software diskette in the disk drive on the front panel.

4. Turn the power on by pressing the front panel ON/SBY switch.

   It takes approximately 5 minutes for the software to load from the diskette. The instrument will restart when the loading process is complete. If the software fails to load, an error will be indicated on the CRT. If this occurs, call Boonton Electronics Customer Service for assistance. See Appendix C for instructions on contacting Boonton Electronics.

6. When the software has been loaded successfully, store the diskette in a safe place for future use.

7. After loading updated software, the instrument will report an *AutoCal* error. To clear the error, for each channel, connect the sensor to the calibrator and initiate *AutoCal*, as instructed in **Subsection 4.1 Calibration**.

8. If an error other than *AutoCal* error exists, clear it by pressing the CLR key and repeat the *AutoCal* menu selection.

## 7.5 Test Equipment

This subsection lists the equipment required to test and calibrate the Model 4400A/4500A. Any substitutions for the recommended test equipment may require you to modify the procedures provided in this subsection.

**Performance Verification**

1. RS-232C terminal or PC with terminal emulation software capable of supporting 9600 baud, no parity, 8-bit word length, 1 stop bit.
2. Wandel & Goltermann EPM-1 Milliwatt Test Set
3. Hewlett-Packard HP437B Power Meter
4. Hewlett-Packard HP8481A NIST Certified Power Sensor with calibration data (0.01 to 18 GHz)
5. Hewlett-Packard HP8487 NIST Certified Power Sensor with 11904D 2.4 mm (f) to K (m) adapter and calibration data (0.05 to 40 GHz)
6. Hewlett-Packard HP5386A Electronic Counter
7. Hewlett-Packard HP8012B Pulse Generator
8. Hewlett-Packard 1250-1750 APC 3.5 (m) to N (f) adapter
9. Weinschel 44-6 6-dB Attenuator (0.01 to 18 GHz)
10. Wiltron 41KC-6 6-dB Attenuator (0.5 to 40 GHz)
11. Wiltron 6669A Programmable Sweep Generator
12. IEEE-488 Controller
13. 15 dB Type N Attenuator
14. Wiltron Model 560A Scalar Network Analyzer
15. Wiltron Model 560-97NF50-1 SWR Autotester (0.01 to 18 GHz)
16. Wiltron Model 560-97KF50 SWR Autotester (0.01 to 40 GHz)
17. Wiltron Model 22N50 Open/Short (0.01 to 18 GHz)
18. Wiltron Model 22K50 Open/Short (0.01 to 40 GHz)

**Calibration**

1. Wandel & Goltermann EPM-1 Milliwatt Test Set
2. Hewlett-Packard HP437B Power Meter
3. Hewlett-Packard HP8481A NIST Certified Power Sensor with calibration data (0.01 to 18 GHz)

## 7.6 Performance Verification

The verification procedure demonstrates that the Model 4400A/4500A is performing according to the specifications published in **Subsection 1.6 Specifications**. This procedure should be performed when the instrument is first put into service and after making repairs or adjustments. Performance verification should be repeated at least once every twelve months.

### Checklist

The verification procedure is outlined in Table 7-1 Verification Checklist. Each time you verify the instrument performance, photocopy the Checklist and record the instrument's performance on the copy to provide a record of instrument history. Attach additional sheets as instructed in the verification procedures.

### Fuse Type and Rating

The 2 fuses should be Type 3AG, 250 volt, 1.6 amp, slo-blow.

### Instrument Serial Number

The instrument's serial number is printed on the rear panel and is stored in the instrument memory. View the stored serial number by selecting *Util > Inst Status REPORT*. The stored serial number should match the number on the rear panel. Record the instrument serial number on the Checklist.

### Control Software Version

The control software version number appears on the screen at power-up and may be displayed by selecting *Util > Inst Status REPORT*. Record the control software version number on the Checklist.

### Time and Date

The time and date are factory set and maintained internally by a battery-backed real time clock. The time is set initially to Eastern time and may be viewed and adjusted by selecting *Util > Clock*. The time and date are not updated while they are being displayed. Record the time and date on the Checklist.

### Sensor Serial Number

The sensor serial number is printed on the sensor and is stored in the sensor's internal memory. View the sensor serial number (as well as the sensor model number and frequency range) by selecting *Spcl > CH # Sensor REPORT.** The stored sensor serial number should match the number printed on the sensor. Record the stored serial number on the Checklist.

*The symbol # designates the numerals 1 or 2.

## Table 7-1. Verification Checklist

| | | | |
|---|---|---|---|
| Check fuse type and rating: 3AG,250 volt, 1.6 amp, Slow Blow | ☐ | | |
| Instrument Serial Number | _____ | | |
| Control Software Version | _____ | | |
| Instrument Time and Date | _____ | | |
| Sensor Serial Number | CH1 _____ | CH2 _____ | |
| Sensor Model Number | CH1 _____ | CH2 _____ | |
| Calibrator Frequency Verification* | ☐ | | |
| Calibrator Linearity Verification* | ☐ | | |
| Calibrator 0 dBm Verification | Cal Level _____ | dBm _____ | |
| Run *AutoCal* | ☐ CH1 | ☐ CH2 | ☐ No CH2 |
| Sensor Return Loss Verification* | ☐ CH1 | ☐ CH2 | |
| Sensor Linearity* | ☐ CH1 | ☐ CH2 | |
| Sensor Frequency Calibration Factor Verification* | ☐ CH1 | ☐ CH2 | |
| Sensor Risetime Verification* | ☐ CH1 | ☐ CH2 | |
| Check External Trigger | ☐ CH1 | ☐ CH2 | |
| Check External Calibrator | ☐ | | |
| Check IEEE-488 Bus | ☐ | | |
| Check Serial Port 1 | ☐ | | |
| Check Serial Port 2 | ☐ | | |

*Attach separate data sheet.

### Calibrator Frequency Verification

Before performing the calibrator linearity verification procedure, photocopy Table 7-2 and use it to record the measurement data. Attach the completed table to the Checklist.

To verify the calibrator frequency accuracy, proceed as follows:

1. Press the **INIT** system key to initialize the Model 4400A/4500A.
2. Set the calibrator output level to 0.0 dBm by selecting *Spcl > Calibrator > Set Level 0.0 dBm.*
3. Set the calibrator output mode to CW by selecting *Spcl > Calibrator > Cal Mode CW.*

4. Connect the HP5386A frequency counter to the Model 4400A/4500A calibrator output.

5. Enable the calibrator output by selecting *Spcl > Calibrator > Cal Output On.*

6. Measure the calibrator frequency and record the value in Table 7-2.

**Table 7-2. Calibrator Output Frequency**

| Calibrator Output | Minimum | Measured | Maximum |
|---|---|---|---|
| 1.024 GHz, 0.0 dBm | 1.023900 GHz | _____ | 1.024100 GHz |

## Calibrator Linearity Verification

Verify calibrator linearity by establishing a reference at 0.0 dBm and measuring the error at various test levels in the range from -30 to +20 dBm. The measurement tolerance shown in Tables 7-3a and 7-3b reflect both the specified calibrator performance and the uncertainty of the measurement setup. To avoid the nonlinearity term associated with using the HP8481A at levels above +9 dBm, use a 15 dB pad to attenuate higher calibrator levels to below +5.0 dBm.

Before performing the calibrator linearity verification procedure, photocopy Tables 7-3a and 7-3b and use the copies to record the measurement data. Attach the completed tables to the Checklist.

To verify calibrator linearity:

1. Mount the HP8481A sensor on the HP437B Power Meter. Connect the HP8481A sensor to the Model 4400A/4500A calibrator output through a 15 dB attenuator.

2. Set the calibrator output level to 0.0 dBm by selecting *Spcl > Calibrator > Set Level 0.0 dBm.*

3. Enable the calibrator output by selecting *Spcl > Calibrator > Cal Output On.*

4. Zero the HP437B and set a reference of 0.0 dBm.

5. Enter the calibrator levels listed in Table 7-3a and record the HP437B measurements in the column labeled "Measured."

6. Disable the calibrator output by selecting *Spcl > Calibrator > Cal Output Off.*

**Table 7-3a. Calibrator Linearity - High Power Range**

| Cal Level (dBm) | Minimum (dBm) | Measured (dBm) | Maximum (dBm) |
|---|---|---|---|
| 20.0 | 19.84 | _____ | 20.16 |
| 15.0 | 14.84 | _____ | 15.16 |
| 10.0 | 9.84 | _____ | 10.16 |

7. Remove the 15 dB attenuator and connect the HP8481A sensor directly to the Model 4400A/4500A calibrator output.

8. Zero the HP437B.

9. Set the calibrator output level to 0.0 dBm.

10. Enable the calibrator output by selecting *Spcl > Calibrator > Cal Output ON*.

11. Set a reference on the HP437B at 0.0 dBm.

12. Enter the calibrator level listed in Table 7-3b and record the HP437B measurements in the column labeled "Measured."

**Table 7-3b. Calibrator Linearity - Low Power Range**

| Cal Level (dBm) | Minimum (dBm) | Measured (dBm) | Maximum (dBm) |
|---|---|---|---|
| 5.0 | 4.9 | _____ | 5.1 |
| -5.0 | -5.1 | _____ | -4.9 |
| -10.0 | -10.16 | _____ | -9.84 |
| -15.0 | -15.16 | _____ | -14.84 |
| -20.0 | -20.25 | _____ | -19.75 |
| -25.0 | -25.25 | _____ | -24.75 |
| -30.0 | -30.25 | _____ | -29.75 |

### Calibrator 0 dBm Verification

To verify the calibrator 0 dBm setting accuracy:

1. Connect the EPM-1 sensor to its own calibrator output.

2. Calibrate and zero the EPM-1.

3. Connect the EPM-1 sensor to the 50 MHz calibrator output on the HP437B.

4. Enable the calibrator output and record the measurement.

5. Connect the HP8481A H39 sensor to the 50 MHz calibrator output.

6. Calibrate and zero the HP437B using a 100.00% calibration factor.

7. Set the Model 4400A/4500A calibrator output level to 0.0 dBm by selecting *Spcl > Calibrator > Set Level 0.0 dBm*.

8. Set the calibrator output mode to CW by selecting *Spcl > Calibrator > Cal Mode CW*.

9. Connect the HP8481A H39 sensor to the Model 4400A/4500A calibrator output connector.

10. Enable the Model 4400A/4500A calibrator output by selecting *Spcl > Calibrator > Cal Output On*.

11. Enter the calibration factor for 1 GHz from the calibration data report.

12. Subtract the HP437B reading from the EPM-1 reading and record the value on the Checklist.

## Sensor Return Loss Verification

Table 7-4 lists the Model 4400A/4500A sensors and return loss specifications for each frequency range.

**Table 7-4. Sensor Return Loss**

| Sensor Type | Frequency Range (GHz) | Return Loss (dB) | Measured (dB) |
|---|---|---|---|
| 56018 | 0.5 to 18 | -19 | _____ |
| 56218 | 0.03 to 2 | -23 | _____ |
| | 2 to 6 | -21 | _____ |
| | 6 to 18 | -15 | _____ |
| 56318, 56418 | 0.5 to 2 | -23 | _____ |
| | 2 to 6 | -21 | _____ |
| | 6 to 18 | -15 | _____ |
| 56518 | 0.5 to 2 | -23 | _____ |
| | 2 to 6 | -21 | _____ |
| | 6 to 16 | -19 | _____ |
| | 16 to 18 | -17 | _____ |
| 56326 | 0.5 to 2 | -23 | _____ |
| | 2 to 4 | -21 | _____ |
| | 4 to 18 | -15 | _____ |
| | 18 to 26.5 | -14 | _____ |
| 56340 | 0.5 to 4 | -19 | _____ |
| | 4 to 40 | -12 | _____ |

Referring to Subsection 7-5, select the test equipment appropriate for the frequency range of your sensor(s) and measure sensor return loss. Photocopy Table 7-4 and use it to record the minimum return loss for each range applicable to your sensor(s). Attach the completed table to the Checklist.

## Sensor Linearity Performance Verification

Verify sensor linearity with the internal calibrator by measuring the deviation from a linear response at various levels. The pulse and CW modes are verified separately. Measurement error at low power levels is dominated by the noise and drift of the power sensor. The tolerances listed in Table 7-5 through 7-12 reflect the combination of linearity error, noise, and drift.

Before verifying sensor linearity, select and photocopy those Tables (7-5 through 7-12) that apply to your sensor and use them to record the measurement data. Attach the completed tables to the Checklist.

**Pulse Mode**. To verify sensor linearity in the pulse measurement mode, proceed as follows:

1. Connect the peak power sensor cable to Channel 1 of the Model 4400A/4500A.
2. Connect the peak power sensor to the Model 4400A/4500A calibrator output.
3. Press the **INIT** system key to reset the Model 4400A/4500A settings to their default states.
4. Autocalibrate the sensor by selecting *Chan # > Calibration > AutoCal START*.
5. When the Autocal procedure is complete, set the calibrator output mode to CW by selecting *Spcl > Calibrator > Cal Mode CW*.
6. Enable the calibrator output by selecting *Spcl > Calibrator > Cal Output On*.
7. Set the timebase to 100 µs by selecting *Time > Timebase 100 µs/Div*.

**Table 7-5. 56018 Sensor Linearity (Pulse)**

| Cal Level (dBm) | Minimum (dB) | Measured CH 1 (dB) | Measured CH 2 (dB) | Maximum (dB) |
|---|---|---|---|---|
| 20.0 | 19.91 | _____ | _____ | 20.09 |
| 15.0 | 14.91 | _____ | _____ | 15.09 |
| 10.0 | 9.91 | _____ | _____ | 10.09 |
| 5.0 | 4.90 | _____ | _____ | 5.10 |
| 0.0 | -0.13 | _____ | _____ | 0.13 |
| -5.0 | -5.22 | _____ | _____ | -4.78 |
| -10.0 | -10.49 | _____ | _____ | -9.51 |
| -15.0 | -16.26 | _____ | _____ | -13.74 |
| -20.0 | -23.05 | _____ | _____ | -16.95 |

**Table 7-6. 56218, 56318, 56326, 56340 Sensor Linearity (Pulse)**

| Cal Level (dBm) | Minimum (dB) | Measured CH 1 (dB) | Measured CH 2 (dB) | Maximum (dB) |
|---|---|---|---|---|
| 20.0 | 19.91 | _____ | _____ | 20.09 |
| 15.0 | 14.91 | _____ | _____ | 15.09 |
| 10.0 | 9.91 | _____ | _____ | 10.09 |
| 5.0 | 4.91 | _____ | _____ | 5.09 |
| 0.0 | -0.11 | _____ | _____ | 0.11 |
| -5.0 | -5.41 | _____ | _____ | -4.86 |
| -10.0 | -10.26 | _____ | _____ | -9.74 |
| -15.0 | -15.59 | _____ | _____ | -14.41 |
| -20.0 | -21.52 | _____ | _____ | -18.48 |
| -24.0 | -27.05 | _____ | _____ | -20.95 |

**Table 7-7. 56418 Sensor Linearity (Pulse)**

| Cal Level (dBm) | Minimum (dB) | Measured CH1 (dB) | Measured CH2 (dB) | Maximum (dB) |
|---|---|---|---|---|
| 5.0 | 4.91 | _____ | _____ | 5.09 |
| 0.0 | -0.09 | _____ | _____ | 0.09 |
| -5.0 | -5.09 | _____ | _____ | -4.91 |
| -10.0 | -10.11 | _____ | _____ | -9.59 |
| -15.0 | -15.41 | _____ | _____ | -14.86 |
| -20.0 | -20.26 | _____ | _____ | -19.74 |
| -25.0 | -25.59 | _____ | _____ | -24.41 |
| -30.0 | -31.52 | _____ | _____ | -28.48 |
| -34.0 | -37.05 | _____ | _____ | -30.95 |

8. Set Markers to CH 1 by pressing *Mark* > *Extensions* > *MK 1 CH 1*.

9. Set Marker 1 to -400 µs by selecting *Mark* > *Marker 1 -400* µs.

10. Set Marker 2 to 400 µs by selecting *Mark* > *Marker 2 400* µs.

11. Set the Delta Marker mode to *Average* by selecting *Mark* > *Extensions* > *Delta Marker Avg.*

**Table 7-8. 56518, 56526 Sensor Linearity (Pulse)**

| Cal Level (dBm) | Minimum (dB) | Measured CH1 (dB) | Measured CH2 (dB) | Maximum (dB) |
|---|---|---|---|---|
| 20.0 | 19.83 | _____ | _____ | 20.17 |
| 15.0 | 14.83 | _____ | _____ | 15.17 |
| 10.0 | 9.83 | _____ | _____ | 10.17 |
| 5.0 | 4.83 | _____ | _____ | 5.17 |
| 0.0 | -0.17 | _____ | _____ | 0.17 |
| -5.0 | -5.17 | _____ | _____ | -4.83 |
| -10.0 | -10.17 | _____ | _____ | -9.83 |
| -15.0 | -15.18 | _____ | _____ | -14.82 |
| -20.0 | -20.19 | _____ | _____ | -19.81 |
| -25.0 | -25.24 | _____ | _____ | -24.76 |
| -30.0 | -30.39 | _____ | _____ | -29.62 |
| -35.0 | -35.92 | _____ | _____ | -34.19 |
| -40.0 | -43.18 | _____ | _____ | -38.07 |

12. Select one of the sensor data tables (Tables 7-*5*, 7-*6, 7-7 or 7-8)* according to the sensor type being tested.
13. Set the calibrator to the levels listed in the selected table by pressing *Spcl > Calibrator > Set Level* and record the AVG readout values in the table.
14. If CH 2 is installed, connect the peak power sensor cable to CH2 of the Model 4400A/4500A.
15. Turn on CH 2 by pressing *Chan > Select CH > Channel On.*
16. Repeat steps 4 - 13, substituting CH 2 for CH 1.

**CW Mode**. To verify sensor linearity for the CW measurement mode, proceed as follows:

1. Perform Steps 1 through 8 of the Pulse Mode verification procedure.
2. Select CW measurement mode by pressing *Chan > Extensions > Power Mode CW.*
3. Set Marker 1 to Channel 1 at 0 µs by selecting *Mark > Extensions > MK 1 CH 1* and *Mark > Marker* 1 0 µs.
4. Select one of the following tables (Tables 7-98, 7-10, 7-11 or 7-12) according to the sensor type being tested.
5. Set the calibrator to the levels listed in the selected table and record the Marker 1 readout values in the table. Occasionally zero the sensor when testing levels below -10 dBm by selecting *Chan 1 > Calibration > Zeroing START.*
6. If CH 2 is installed, repeat Steps 1 through 5, substituting Channel 2 for Channel 1.

**Table 7-9. 56018 Sensor Linearity (CW)**

| Cal Level (dBm) | Minimum (dB) | Measured CH 1 (dB) | Measured CH 2 (dB) | Maximum (dB) |
|---|---|---|---|---|
| 20.0 | 19.91 | _____ | _____ | 20.09 |
| 15.0 | 14.91 | _____ | _____ | 15.09 |
| 10.0 | 9.91 | _____ | _____ | 10.09 |
| 5.0 | 4.91 | _____ | _____ | 5.09 |
| 0.0 | -0.09 | _____ | _____ | 0.09 |
| -5.0 | -5.10 | _____ | _____ | -4.90 |
| -10.0 | -10.13 | _____ | _____ | -9.87 |
| -15.0 | -15.22 | _____ | _____ | -14.78 |
| -20.0 | -20.49 | _____ | _____ | -19.51 |
| -25.0 | -26.26 | _____ | _____ | -23.74 |
| -30.0 | -33.05 | _____ | _____ | -26.95 |

**Table 7-10. 56218, 56318, 56326, 56340 Sensor Linearity (CW)**

| Cal Level (dBm) | Minimum (dB) | Measured CH 1 (dB) | Measured CH 2 (dB) | Maximum (dB) |
|---|---|---|---|---|
| 20.0 | 19.91 | _____ | _____ | 20.09 |
| 15.0 | 14.91 | _____ | _____ | 15.09 |
| 10.0 | 9.91 | _____ | _____ | 10.09 |
| 5.0 | 4.91 | _____ | _____ | 5.09 |
| 0.0 | -0.09 | _____ | _____ | 0.09 |
| -5.0 | -5.09 | _____ | _____ | -4.91 |
| -10.0 | -10.11 | _____ | _____ | -9.89 |
| -15.0 | -15.14 | _____ | _____ | -14.86 |
| -20.0 | -20.26 | _____ | _____ | -19.74 |
| -25.0 | -25.59 | _____ | _____ | -24.41 |
| -30.0 | -31.52 | _____ | _____ | -28.48 |
| -34.0 | -37.05 | _____ | _____ | -30.95 |

**Table 7-11. 56418 Sensor Linearity (CW)**

| Cal Level (dBm) | Minimum (dB) | Measured CH1 (dB) | Measured CH2 (dB) | Maximum (dB) |
|---|---|---|---|---|
| 5.0 | 4.91 | _____ | _____ | 5.09 |
| 0.0 | -0.09 | _____ | _____ | 0.09 |
| -5.0 | -5.09 | _____ | _____ | -4.91 |
| -10.0 | -10.09 | _____ | _____ | -9.91 |
| -15.0 | -15.10 | _____ | _____ | -14.90 |
| -20.0 | -20.13 | _____ | _____ | -19.87 |
| -25.0 | -25.22 | _____ | _____ | -24.78 |
| -30.0 | -30.49 | _____ | _____ | -29.51 |
| -35.0 | -36.26 | _____ | _____ | -33.74 |
| -40.0 | -43.05 | _____ | _____ | -37.95 |

**Table 7-12. 56518, 56526, 56546 Sensor Linearity (CW)**

| Cal Level (dBm) | Minimum (dB) | Measured CH1 (dB) | Measured CH2 (dB) | Maximum (dB) |
|---|---|---|---|---|
| 20.0 | 19.83 | _____ | _____ | 20.17 |
| 15.0 | 14.83 | _____ | _____ | 15.17 |
| 10.0 | 9.83 | _____ | _____ | 10.17 |
| 5.0 | 4.83 | _____ | _____ | 5.17 |
| 0.0 | -0.17 | _____ | _____ | 0.17 |
| -5.0 | -5.17 | _____ | _____ | -4.83 |
| -10.0 | -10.17 | _____ | _____ | -9.83 |
| -15.0 | -15.17 | _____ | _____ | -14.83 |
| -20.0 | -20.17 | _____ | _____ | -19.83 |
| -25.0 | -25.18 | _____ | _____ | -24.82 |
| -30.0 | -30.19 | _____ | _____ | -29.81 |
| -35.0 | -35.24 | _____ | _____ | -34.76 |
| -40.0 | -40.39 | _____ | _____ | -39.62 |
| -45.0 | -45.92 | _____ | _____ | -44.19 |
| -50.0 | -53.18 | _____ | _____ | -48.07 |

## Sensor Frequency Calibration Factor Verification

Verify the frequency calibration factors for the peak power sensors by comparing the Model 4400A/4500A measurements to those of an NIST traceable power sensor. The specifications for Boonton peak power sensors are listed in Tables 7-13 through 7-16.

Before performing the sensor frequency calibration factor verification procedure, photocopy the tables (7-13 through 7-16) that are applicable to your sensor(S) (as explained in the procedures) and use them to record the measurement data. The sensor types 56318, 56418 and 56518 use Table 7-14 starting with the 0.50 GHz frequency. Ignore readings below 0.50 GHz for sensors of this type. Attach the completed table(s) to the Checklist.

Verify the sensor frequency calibration factor for each sensor as follows:

1. Connect the peak power sensor cable to Channel 1 of the Model 4400A/4500A.
2. Connect the peak power sensor to the Model 4400A/4500A calibrator output.
3. Press the **INIT** system key to reset the Model 4400A/4500A settings to their default states.
4. Autocalibrate the sensor by selecting *Chan 1 > Calibration > AutoCal START.*
5. Set the Timebase to 100 µs by selecting *Time > Timebase 100 µs/Div.*
6. Set Marker 1 to -400 µs by selecting *Mark > Marker 1 400 µs.*
7. Set Marker 2 to 400 µs by selecting *Mark > Marker 2 400 µs.*
8. Set the Delta Marker mode to *Average* by selecting *Mark > Extensions > Delta Marker Avg.*
9. Connect the appropriate reference sensor (NIST traceable) to the HP437B power meter.
10. Calibrate and zero the HP437B power meter using its internal 50 MHz calibrator.
11. Tune the Wiltron 6669A sweep generator to 1.0 GHz and adjust its output level to 0 dBm.
12. For Type N sensors, connect the K-to-N adapter and the 44-6 6-dB attenuator to the 6669A output.
13. For Type K sensors, connect the 41KC-6 6 dB attenuator to the 6669A output.
14. Connect the appropriate calibrated reference sensor to the 6669A output.
15. Set a reference on the HP437B at 0.00 dBm.
16. Select the table (Table 7-13 through 7-16) that corresponds to the peak power sensor type to be tested and set the 6669A to the test frequencies listed in the table.

## Table 7-13. 56018 Sensor Frequency Calibration Factor Accuracy

| Frequency (GHz) | Reference (dBm) | Minimum (dB) | Measured CH 1 (dB) | Measured CH 2 (dB) | Maximum (dB) |
|---|---|---|---|---|---|
| 0.50 | _____ | -0.14 | _____ | _____ | 0.14 |
| 2.00 | _____ | -0.16 | _____ | _____ | 0.16 |
| 4.00 | _____ | -0.17 | _____ | _____ | 0.17 |
| 6.00 | _____ | -0.18 | _____ | _____ | 0.18 |
| 8.00 | _____ | -0.19 | _____ | _____ | 0.19 |
| 10.00 | _____ | -0.19 | _____ | _____ | 0.19 |
| 12.00 | _____ | -0.19 | _____ | _____ | 0.19 |
| 14.00 | _____ | -0.20 | _____ | _____ | 0.20 |
| 16.00 | _____ | -0.20 | _____ | _____ | 0.20 |
| 18.00 | _____ | -0.20 | _____ | _____ | 0.20 |

## Table 7-14. 56218, 318*, 418*, 518* Sensor Frequency Calibration Factor Accuracy

| Frequency (GHz) | Reference (dBm) | Minimum (db) | Measured CH 1 (dB) | Measured CH 2 (dB) | Maximum (dB) |
|---|---|---|---|---|---|
| 0.03 | _____ | -0.13 | _____ | _____ | 0.13 |
| 0.10 | _____ | -0.13 | _____ | _____ | 0.13 |
| 0.50 | _____ | -0.13 | _____ | _____ | 0.13 |
| 2.00 | _____ | -0.16 | _____ | _____ | 0.16 |
| 4.00 | _____ | -0.17 | _____ | _____ | 0.17 |
| 6.00 | _____ | -0.19 | _____ | _____ | 0.19 |
| 8.00 | _____ | -0.20 | _____ | _____ | 0.20 |
| 10.00 | _____ | -0.20 | _____ | _____ | 0.20 |
| 12.00 | _____ | -0.20 | _____ | _____ | 0.20 |
| 14.00 | _____ | -0.21 | _____ | _____ | 0.21 |
| 16.00 | _____ | -0.21 | _____ | _____ | 0.21 |
| 18.00 | _____ | -0.21 | _____ | _____ | 0.21 |

* Only perform measurements at 0.50 to 18 GHz.

**Table 7-15. 56326, 56526 Sensor Frequency Calibration Factor Accuracy**

| Frequency (GHz) | Reference (dBm) | Minimum (db) | Measured CH 1 (dB) | Measured CH 2 (dB) | Maximum (dB) |
|---|---|---|---|---|---|
| 0.50 | _____ | -0.14 | _____ | _____ | 0.14 |
| 2.00 | _____ | -0.15 | _____ | _____ | 0.15 |
| 4.00 | _____ | -0.19 | _____ | _____ | 0.19 |
| 6.00 | _____ | -0.19 | _____ | _____ | 0.19 |
| 8.00 | _____ | -0.20 | _____ | _____ | 0.20 |
| 10.00 | _____ | -0.20 | _____ | _____ | 0.20 |
| 12.00 | _____ | -0.20 | _____ | _____ | 0.20 |
| 14.00 | _____ | -0.21 | _____ | _____ | 0.21 |
| 16.00 | _____ | -0.21 | _____ | _____ | 0.21 |
| 18.00 | _____ | -0.21 | _____ | _____ | 0.21 |
| 20.00 | _____ | -0.26 | _____ | _____ | 0.26 |
| 22.00 | _____ | -0.26 | _____ | _____ | 0.26 |
| 24.00 | _____ | -0.26 | _____ | _____ | 0.26 |
| 26.50 | _____ | -0.26 | _____ | _____ | 0.26 |

17. For each test frequency, calculate the corrected power measurements using the NIST traceable test data. Record the results in the “Reference” column of the table.

18. Disconnect the calibrated reference sensor from the 6669A output.

19. Tune the 6669A to 1.0 GHz.

20. Connect the peak power sensor to the 6669A output.

21. Tune the Model 4500 to 1.00 GHz by selecting *Meas > Freq CH 1 1.00 GHz.*

22. Adjust the Model 4400A/4500A using *Chan 1 > Extensions > dB Offset* until the *Delta Marker* reads 0.00 dB.

23. Tune the 6669A to the test frequencies listed in the selected table.

**Table 7-16. 56340, 56540 Sensor Frequency Calibration Factor Accuracy**

| Frequency (GHz) | Reference (dBm) | Minimum (dB) | Measured CH 1 (dB) | Measured CH 2 (dB) | Maximum (dB) |
|---|---|---|---|---|---|
| 0.50 | _____ | -0.14 | _____ | _____ | 0.14 |
| 2.00 | _____ | -0.15 | _____ | _____ | 0.15 |
| 4.00 | _____ | -0.19 | _____ | _____ | 0.19 |
| 6.00 | _____ | -0.19 | _____ | _____ | 0.19 |
| 8.00 | _____ | -0.20 | _____ | _____ | 0.20 |
| 10.00 | _____ | -0.20 | _____ | _____ | 0.20 |
| 12.00 | _____ | -0.20 | _____ | _____ | 0.20 |
| 14.00 | _____ | -0.21 | _____ | _____ | 0.21 |
| 16.00 | _____ | -0.21 | _____ | _____ | 0.21 |
| 18.00 | _____ | -0.21 | _____ | _____ | 0.21 |
| 20.00 | _____ | -0.26 | _____ | _____ | 0.26 |
| 22.00 | _____ | -0.26 | _____ | _____ | 0.26 |
| 24.00 | _____ | -0.26 | _____ | _____ | 0.26 |
| 26.50 | _____ | -0.26 | _____ | _____ | 0.26 |
| 28.00 | _____ | -0.31 | _____ | _____ | 0.31 |
| 32.00 | _____ | -0.31 | _____ | _____ | 0.31 |
| 36.00 | _____ | -0.31 | _____ | _____ | 0.31 |
| 40.00 | _____ | -0.31 | _____ | _____ | 0.31 |

24. For each test frequency of the 6669A, tune the Model 4400A/4500A to the same frequency, using the *Meas > Freq CH 1 ##.## GHz* function.

25. For each test frequency, calculate the corrected power measurements by subtracting the previously recorded calibrated power measurements in the “Reference” column of the table from the Avg. Marker measurement. Record the result in the “Measured” column.

26. Disconnect the peak power sensor from the 6669A output.

27. Repeat Steps 1 through 26, substituting Channel 2 for Channel 1.

## Sensor Risetime Verification

The risetime test uses the internal calibrator and the automatic measuring (Text) mode of the Model 4400A/4500A to measure the risetime of the sensor.

Before performing the sensor risetime verification procedure, photocopy Table 7-17 and use it to record the measurement data. Attach the completed table to the Checklist.

If cable lengths other than 5 feet are used with the sensors, check the cable length specification in Chapter 1.

**Table 7-17. Sensor Risetime**

| Level (dBm) | Trigger Level (dBm) | Bandwidth High | Bandwidth Low |
|---|---|---|---|
| **Sensor 56018, 56318, 56326, 56340** | | Serial Number: | |
| | | | <200ns |
| +20 | +15 | <15.3ns* _____ | _____ |
| +15 | +10 | <15.5ns* _____ | _____ |
| +10 | +5 | <15.8ns* _____ | _____ |
| +5 | 0 | <16.1ns* _____ | _____ |
| 0 | -5 | <16.5ns* _____ | _____ |
| **Sensor 56418** | | Serial Number: _____ | |
| | | <30ns | <100ns |
| +5 | 0 | _____ | _____ |
| 0 | -5 | _____ | _____ |
| -5 | -10 | _____ | _____ |
| -10 | -15 | _____ | _____ |
| -15 | -20 | _____ | _____ |
| | | _____ | |
| **Sensor 56218** | | Serial Number: | _____ |
| | | <150ns | <500ns |
| +20 | +15 | _____ | _____ |
| +15 | +10 | _____ | _____ |
| +10 | +5 | _____ | _____ |
| +5 | 0 | _____ | _____ |
| 0 | -5 | _____ | _____ |

* When using the internal calibrator for fast risetime measurements, the contribution of the calibrator is added to the specified value for this test.

**Table 7-17. Sensor Risetime** *(continued)*

| Level (dBm) | Trigger Level (dBm) | Bandwidth CH1 High Risetime <100 (ns) | CH1 Low Risetime <300 (ns) | CH2 High Risetime <100 (ns) | CH2 Low Risetime <300 (ns) |
|---|---|---|---|---|---|
| **Sensor 56518, 56526, 56540** | | | | | |
| 20.0 | -10.0 | Serial #_____ | | Serial #_____ | |
| 15.0 | -10.0 | | | | |
| 10.0 | -10.0 | | | | |
| 5.0 | -10.0 | | | | |
| 0.0 | -10.0 | | | | |
| -5.0 | -10.0 | | | | |
| -10.0 | -25.0 | | | | |
| -15.0 | -25.0 | | | | |
| -20.0 | -25.0 | | | | |

To measure sensor risetime:

1. Connect the peak power sensor cable to Channel 1 of the Model 4400A/4500A.
2. Connect the peak power sensor to the calibrator output.
3. Perform *AutoCal*, if required.
4. Press the **INIT** system key to reset the instrument's settings to their default states (High Video BW mode).
5. Set the calibrator to pulse mode by selecting *Spcl > Calibrator > Cal Mode Pulse.*
6. Turn the calibrator on by selecting *Spcl > Calibrator > Cal Output On.*

For each of the levels in Table 7-17:

7. Set the timebase to the value of the specified risetime for the sensor under test by selecting *Time > Timebase #.*
8. Set the calibrator output level to the value listed in Table 7-17 by selecting *Spcl > Calibrator > Set Level #.*
9. Set the trigger level to the value listed in Table 7-17 by selecting *Trig > Trig Level #.*
10. Press the **TEXT** system key to change the operating mode to the text display.
11. Record the risetime reading in Table 7-17.
12. Repeat Steps 8 through 11 for each level listed in Table 7-17.
13. Select Low Video BW by pressing *Chan > Extensions > Video BW Low*.
14. Repeat Steps 7 through 11 while in the Low Video BW mode.
15. To measure CH 2 risetime, repeat steps 1-14, substituting CH 2 for CH 1, and setting the trigger source to CH2 internal by pressing *Trig > Trig Source CH 2 Int.*

### Calibrator External Pulse Verification

Verify the external pulse input for the calibrator after the sensor has been calibrated (Subsection 7.7). The external pulse input is a TTL-compatible input located on the rear panel of the Model 4400A/4500A.

To test the external pulse input, proceed as follows:

1. Connect the Channel 1 sensor to the calibrator output.
2. Press the **INIT** system key to reset the instrument's settings to their default states.
3. Set the calibrator output to 5 dBm by selecting *Spcl > Calibrator > Set Level 5 dBm.*
4. Set the calibrator trigger to *External* by selecting *Spcl > Calibrator > Pulse > Source Ext.*
5. Select positive trigger polarity by selecting *Spcl > Calibrator > Pulse > Polarity +*.
6. Set the calibrator to pulse mode by selecting *Spcl > Calibrator > Cal Mode Pulse.*
7. Turn the calibrator on by selecting *Spcl > Calibrator > Cal Output On.*
8. Connect a BNC cable between the external pulse generator output and the EXT PULSE input on the Model 4400A/4500A.
9. Set the external pulse generator output for 5 volts, 50 ohms, 100 µs pulse period, 50 µs pulse width.

   The Model 4400A/4500A should display a 5 dBm pulsed waveform with the period and pulse width indicated in Step 9.

### IEEE-488 Bus Verification

Use the IEEE-488 controller and the Model 4400A/4500A to perform a READ, WRITE, and SRQ.

1. Set the IEEE-488 bus address by selecting *Util > IEEE-488 > Bus Setup > Address #.*
2. Press the **CLR** key to clear any pending errors.
3. Using the IEEE-488 controller, send the command **TKMEAS** to the Model 4400A/4500A.

   The REM front panel annunciator should illuminate indicating that the Model 4400A/4500A is in the remote mode; the LSN annunciator should illuminate indicating that the Model 4400A/4500A is "listen addressed." No errors should be indicated on the display.

4. Enter or read a string from the IEEE-488 bus.

   The TLK annunciator should illuminate indicating that the Model 4400A/4500A is in the talk mode. (The REM annunciator may either be On or Off, depending on the controller.)

5. Enable the SRQ by selecting *Util > IEEE-488 > SRQ Mask 128.*

   The SRQ should illuminate.

6. Return the Model 4400A4500A to the default state by pressing the **INIT** system key.
7. Enter a "0" into the SRQ mask by selecting *Util > IEEE-488 > SRQ Mask 0.*

**Serial Port 1 Verification**

Serial Port 1 is normally used to connect a serial plotter to the Model 4400A/4500A. For this test, an EIA RS-232C terminal will be connected to the Model 4400A/4500A to simulate the plotter and display the instrument's output.

To verify Serial Port 1, proceed as follows:

1. Connect a serial cable (See Appendix B) between the RS-232 1 connector (located on the rear panel of the Model 4400A/4500A) and the RS-232C terminal.
2. Configure Serial Port 1 by selecting the *Util > Serial > COM 1* menu and selecting the appropriate communication parameters.
3. Press the **PLOT** system key.

After a short delay, data will be displayed on the terminal. These are the HPGL commands in ASCII format that would normally be sent to the plotter. Typical commands are PU, SR, PD, IN, RO,..., followed by commas and numbers.

## 7.7 Calibration

User calibration of the Model 4400A/4500A involves adjusting the fixed level of the calibrator at 0 dBm. This procedure may be performed either as part of the annual maintenance cycle of the instrument, or after the calibrator is repaired or removed from the frame. During annual maintenance, conduct the performance verification procedures presented earlier in this section to determine if recalibration is required.

If calibration is required, allow sufficient time* for the instrument and the test equipment to warm up and stabilize. The calibrator assembly in the Model 4400A/4500A remains powered while the instrument is in the standby mode. When the unit has been in standby, a 15-minute warmup period is required before you initiate these calibration procedures. Otherwise, a two-hour warmup period is required.

*Refer to test equipment manufacturers' specifications.

## Calibrator 0 dBm Setting

Use the following procedure to calibrate the calibrator 0 dBm output setting:

1. Connect the EPM-1 sensor to its own calibrator output.
2. Calibrate and zero the EPM-1.
3. Connect the EPM-1 sensor to the 50 MHz calibrator output on the HP437B.
4. Enable the calibrator output and record the measurement.
5. Connect the HP8481A H39 sensor to the 50 MHz calibrator output.
6. Calibrate and zero the HP437B using a 100.00% calibration factor.
7. Enable the calibrator service mode on the Model 4400A/4500A by selecting *Spcl > Servicing > Cal Mode On.*
8. Set the calibrator output level to 0.0 dBm by selecting *Spcl > Calibrator > Set Level 0.0 dBm.*
9. Set the calibrator output mode to CW by selecting *Spcl > Calibrator > Cal Mode CW.*
10. Enable the calibrator output by selecting *Spcl > Calibrator > Cal Output On.*
11. Connect the HP8481A H39 sensor to the Model4400A/ 4500A calibrator output connector.
12. Enter the calibration factor for 1 GHz from the calibration data report.
13. Activate the 0 dBm calibration mode by selecting *Spcl > Calibrator > Extensions > Fixed Cal*
14. Adjust the *Fixed Cal* value until the HP437B reading equals the negative of the value recorded in Step 4.
15. Disable the calibrator service mode on the Model 4400A/4500A by selecting *Spcl > Servicing > Cal Mode Off.*

This completes the calibration procedure.

# Appendix A

## Error Messages

| NO. | MESSAGE | DESCRIPTION |
|---|---|---|
| 1 | Err Range of # | A number sent over the bus is out of range of the selected parameter. |
| 2 | Err # of Digits | Too many digits entered into the current function. |
| 3 | Err Under Range | Measured power level is under the specified limit of the sensor. |
| 4 | Err Over Range | Measured power level is over the specified limit of the sensor. |
| 5 | No CH Responding | CH1 and CH2 do not respond to instrument control. |
| 6 | CH1 Not Responding | Channel 1 is not responding to instrument control. (Channel may not be installed.) |
| 7 | CH2 Not Responding | Channel 2 is not responding to instrument control. (Channel may not be installed.) |
| 10 | Not supported | The current software revision does not support the function selected. |
| 11 | Err $1^2$C Ack missing | Missing Acknowledge signal while assessing the $I^2$C bus. |
| 12 | Err $1^2$C Timeout | The system software has timed-out while communicating over the $I^2$C bus. |
| 13 | Ref CH not Selected | Accessing a REF Channel parameter over the bus while the Ref CH has not been enabled. |
| 14 | MK Delta Invalid | The marker delta value is not valid in the present instrument configuration. |
| 15 | No Calibrator | The calibrator is not responding to instrument control. (Calibrator may not be installed.) |
| 16 | Selected CH not Active | The channel that is selected is not active. This error is generated when channel related functions are executed but the channel is not active and no action can be taken. |
| 17 | DSP Not Responding | The DSP circuitry is not responding to instrument control. (The DSP chip may not be installed.) |

| NO. | MESSAGE | DESCRIPTION |
|---|---|---|
| 18 | DSP Interface Error | Communication fault between the system CPU and the DSP chip. |
| 19 | FPLA Interface | Communication fault between the system CPU and the Field Programmable Logic Array. |
| 20 | CAL Level > Limit | Attempt to set the calibrator Set Level greater than the Max Power level. |
| 21 | CAL Limit < Set LVL | Attempt to set the Max Power level less than the calibrator Set level. |
| 22 | Sensor Disconnected | Attempt to set the Max Power level less than the calibrator Set level. |
| 23 | Measurement Error | There are no valid measurements to read from the instrument in its present configuration |
| 24 | Out of Freq Rng | Entering a frequency which is not within the range of the sensor. |
| 25 | Err CH1 Sensor Data | Checksum failure of the EEPROM located on the sensor connected to Channel 1. |
| 26 | Err CH2 Sensor Data | Checksum failure of the EEPROM located on the sensor connected to Channel 2. |
| 28 | Err Pulse Meas | The pulse power measurement is not valid. |
| 29 | Err Func Unavailable | In the present instrument configuration the selected function cannot be executed. Check for power channel functions being executed when reference or math channel is active, or instrument is in CW mode during pulse measurement operations. |
| 30 | Err Bus Buffer | IEEE-488 Listen buffer overflow. The input string is greater than 1024 characters. |
| 31 | Err Bus Command | Received an illegal mnemonic. |
| 32 | Err Bus String | Incorrect input data format. |
| 33 | Sensor CH1 + Voltage | The positive power supply for the sensor on channel 1 is out of range. |
| 34 | Sensor CH1 - Voltage | The negative power supply for the sensor on channel 1 is out of range. |
| 35 | Sensor CH2 + Voltage | The positive power supply for the sensor on channel 2 is out of range. |
| 36 | Sensor CH2 - Voltage | The negative power supply for the sensor on channel 2 is out of range. |
| 37 | Autocal is Required | The current measurements may not be valid because the instrument requires a new autocal. |
| 38 | Err Cal Exited | The AutoCal routine has been aborted by depressing the "ESC" key. |
| 39 | Fixed Cal Terminated | Unable to perform fixed cal because lower level is greater than + - 1 dB from 0 dBm. |

| NO. | MESSAGE | DESCRIPTION |
|---|---|---|
| 41 | AutoCal A/D Overrng | The automatic calibration cycle cannot calibrate the sensor. |
| 42 | AutoCal Linearity | The measurement sub-system linearity is out of acceptable range. Try a different sensor or the same sensor on a second channel to determine if the problem is the sensor or input board. |
| 43 | AutoCal Low Level | A level lower than expected was detected during AutoCal. |
| 44 | AutoCal Process | Check the selected channedl to verifty that the sensor is connected to the calibrator. The calibrator operation can be verified with an average power meter. |
| 45 | Zeroing Out of Range | Cannot zero the sensor. Possibly a signal is being applied. |
| 46 | Fixed Cal Err > 1dB | Attempted a fixed point calibration with an input level greater than +/- 1 dBm. |
| 47 | Unable to Zero/Cal | This message indicates that a correct signal level is not available to zero or calibrate the 4500. Zeroing requires no signal and fixed calibration requires 0 dBm +- 1dB. |
| 48 | CH1 Disabled | The channel that the selected function is acting on is not active. The solution is to activate the required channel. |
| 49 | CH2 Disabled | The channel that the selected function is acting on is not active. The solution is to activate the required channel. |
| 50 | AutoCal Data Error | The non-volatile autocal data is not valid. A new autocal must be executed before measurements can be made. |
| 51 | Autocal Temp Drift | This is a measurement error. It is reported over the IEEE-488 bus when the instrument has drifted out of the specified temperature window. The instrument continues to measure, but the accuracy is slightly degraded. |
| 52 | Ref Line CH Not Set | In the reference line tracking mode you must assign a channel to the reference lines. The channel vertical scale and offset is used to determine the screen position for the reference lines. |
| 53 | A-Setup CH1 UNCAL | CH1 must be autocaled before autosetup is initiated. |
| 54 | A-Setup CH2 UNCAL | CH2 must be autocaled before autosetup is initiated. |
| 55 | Loc 0 Recall Only | Program location 0 contains the factory default settings. This location is recall only. |
| 56 | A-Setup No Trigger | The 4500 has not detected a trigger event that is usable for autosetup. Check the trigger source selection. |
| 57 | A-Setup Slow Trig | The trigger events are occurring too slowly for the autosetup function to determine a valid setup. |

| NO. | MESSAGE | DESCRIPTION |
|---|---|---|
| 58 | A-Setup Too Complex | The signal being applied to the instrument is too complex. The signal is not repeatable or is a pulse train which contains multiple valid trigger events. |
| 59 | REF Tracking On | The reference line display level can not be changed from the front panel or the bus when the tracking mode is enabled. |
| 60 | Calibrator EE-Write (EE-Access) | Access is denied because the calibrator is not in the standby mode. |
| 61 | Calibrator (Temp) | The internal temperature of the calibrator is outside the range of compensation. |
| 62 | Calibrator $1^2C$ | Indicates an error communicating with the calibrator. |
| 63 | Calibrator EE-Ack | An Acknowledge is not being received from the EEPROM during read or write operations. |
| 64 | Cal EEPROM-Chksum | The checksum routine performed on the EEPROM memory of the calibrator yields a non-zero result. |
| 65 | Cal EEPROM-Chksum | The checksum routine performed on the program memory of the microcontroller yields a non-zero result. |
| 66 | Calibrator Leveling | Occurs if the DAC # is a negative number while attempting to set a level. |
| 67 | CH1 Trigger Display | When CH1 is assigned to the trigger display, power channel functions are disabled. |
| 68 | CH2 Trigger Display | When CH2 is assigned to the trigger display, power channel functions are disabled. |
| 69 | CH1 & CH2 Trig Disp | When CH1 & CH2 are assigned to the trigger display, power channel functions are disabled. |
| 71 | Reserved | |
| 86 | Reserved | |
| 87 | DSP Table Expansion | DSP Operation Error |
| 105 | Math Error | The system software has produced a mathematical result which has no relevance. |
| 106 | Stacking Error | The system stack has overflowed or is empty when an argument is expected. |
| 107 | Table Range Error | An address vector points beyond the end of the table array of interest. |
| 110 | Unsupported Function | Disk drive software error. Used for host program control. |
| 112 | Disk Write Protected | Cannot store a file to disk because the write protect tab is set. |
| 114 | Diskette Full ! | There are no free bytes available on the diskette. |

| NO. | MESSAGE | DESCRIPTION |
|---|---|---|
| 119 | File Not Found ! | The file number selected does not exist when using a recall function. |
| 120 | File Already Exists | The file number selected has been previously used. |
| 123 | Insufficient Space | The file being created is greated than the available space on the diskette. |
| 129 | Drive Not Ready ! | Either a diskette is missing from the drive or the drive is not operating. |
| 131 | File Creation Error | Could not create a new file. Check disk format and space. |
| 132 | NVRAM File Error | The NVRAM data is corrupted. |
| 133 | NVRAM File Not Found | An NVRAM file is not present - the data is corrupt. |
| 134 | Plotter Not Ready | Attempted to plot with the plotter offline - try reconnecting. |
| 135 | Printer Not Ready | Attempted to print with the printer offline - try reconnecting. |
| 138 | Path Not Found | An invalid path was used internally in a filename. |
| 139 | Disk Access Denied | Attempted to write to a read-only file. |
| 140 | Disk Fn Error | DOS returned a device error while accessing the disk. |
| 141 | Disk File Error | DOS was unable to completed the requested file operation. |
| 142 | Lic EEPROM-Chksum | The feature license password data is corrupted. |

# Appendix B
# Plotter Operation

This appendix provides instructions for generating a hardcopy output of the 4400A/4500A display. The 4400A/4500A supports plotters that conform to the HPGL graphics standard, ThinkJet and LaserJet printers. The printers add the ability to record persistence information. A list of compatible devices that have been tested successfully with the Model 4400A/4500A is presented in Table B-1.

## B.1 Plotter Installation

The Model 4400A/4500A outputs data to a plotter, printer, or an IBM-compatible personal computer (PC) through the Serial 1 connector on the rear panel. Table B-1 lists the appropriate interface cables for the available plotters and IBM-compatibles. Figure B-1 illustrates the pin connections for the DB9/DB25 cable used with the plotters listed in Table B-1. The DB9/DB9 cable used to connect the Model 4400A/4500A to a PC is wired on a "straight through" ("pin-for-pin") basis.

**Table B-1 Printer/Plotter Interfaces**

| | Cable Connectors | | | |
|---|---|---|---|---|
| **Device Type** | **Model 4500** | **Printer/Plotter** | **Remarks** | **Device** |
| HP 7474 and HP 7475A | DB9 Female IEEE-488 | DB25 Male IEEE-488 | Requires handshake: RTS or XON-XOFF | Plotter |
| Fujitsu FPG-315-101 Color | DB9 Female | DB25 Male | | Plotter |
| IBM Comaptible PC | DB9 Female | DB9 Female | | |
| HP ThinkJet | DB9 Female IEEE-488 DB25 Male | DB25 Male IEEE-488 Centronics | Requires handshake: RTS or XON-XOFF | Printer |
| HP LaserJet II | DB9 Female IEEE-488 DB25 Male | DB25 Male IEEE-488 Centronics | Requires handshake: RTS or XON-XOFF | Printer |

## B.2 Plotter Operation

### Pre-Print, Pre-Plot Checks

Before operating the printer/plotter:

a. Verify that the printer/plotter is turned on and connected to the Serial 1 port, parallel print port, or IEEE-488 through the proper interface cable.

b. Verify that the plotter pens are installed properly and paper has been loaded.

c. Verify that the printer/plotter indicates “ON LINE.”

### Operations

Before any plotting can be performed, the onstrument must be configured for PLOT device, device type, output port and the specific settings for the selected serial or IEEE-488 interface. These functions are located in the *Util > Hardcopy* menu.

The *Util > Hardcopy > Device* should be "plotter" or "printer."

Select the correct *Util > Harcdopy >Model*; the list is different based on the device selection of "plotter" or "printer."

Select the *Util > Hardcopy* output port for the printer/plotter. The choices are COM 1, LPT 1, IEEE-488 or disk.

**COM 1:** If the serial output port is selected, then under the *Util > Serial > COM 1* menu the baud rate, length, stop bits,handshake, and Xon-Xoff must be assigned. They must be the same as the printer/plotter.

Incorrect setting will cause the output device to generate incorrect printouts, or the instrument may not communicate. If this happens, press the ESC key to cancel the plot.

If you are using the handshake selection and the instrument does not communicate properly, try setting the handshake to "none" and turn the Xon-Xoff "On" and try plotting again.

**LPT 1:** No additional configuration settings are required.

**IEEE-488**: If the IEEE-488 output port is selected, the only addition to the configuration is the setting of the printer/plotter bus address in the *Util > Hardcopy > Extensions* submenu.

**DISK:** If the disk output port option is selected, the file select can be made in *Util > Hardcopy > File Select*.

Press the **PLOT** system key to plot the current display.

**Post-Plot**

When the plot is complete:

a. A message will appear on the display indicating that the output plot is complete.

b. If the output device is a plotter:

   c. Operate the plotter ON-LINE control to take the plotter off line.

   d. Remove the plot from the plotter.

   e. Unless you expect the plotter to be used again soon, remove and cap the plotter pens.

**Date/Time**

The current date and time can be selected to appear on the display and the output plot in place of the Boonton "Logo" (See Table 4-41), by using *Disp > Format > Disp Header > Date/Time.*

## B.3 Sample Plot

Figure B-1 is a sample output plot from the Model 4500A.

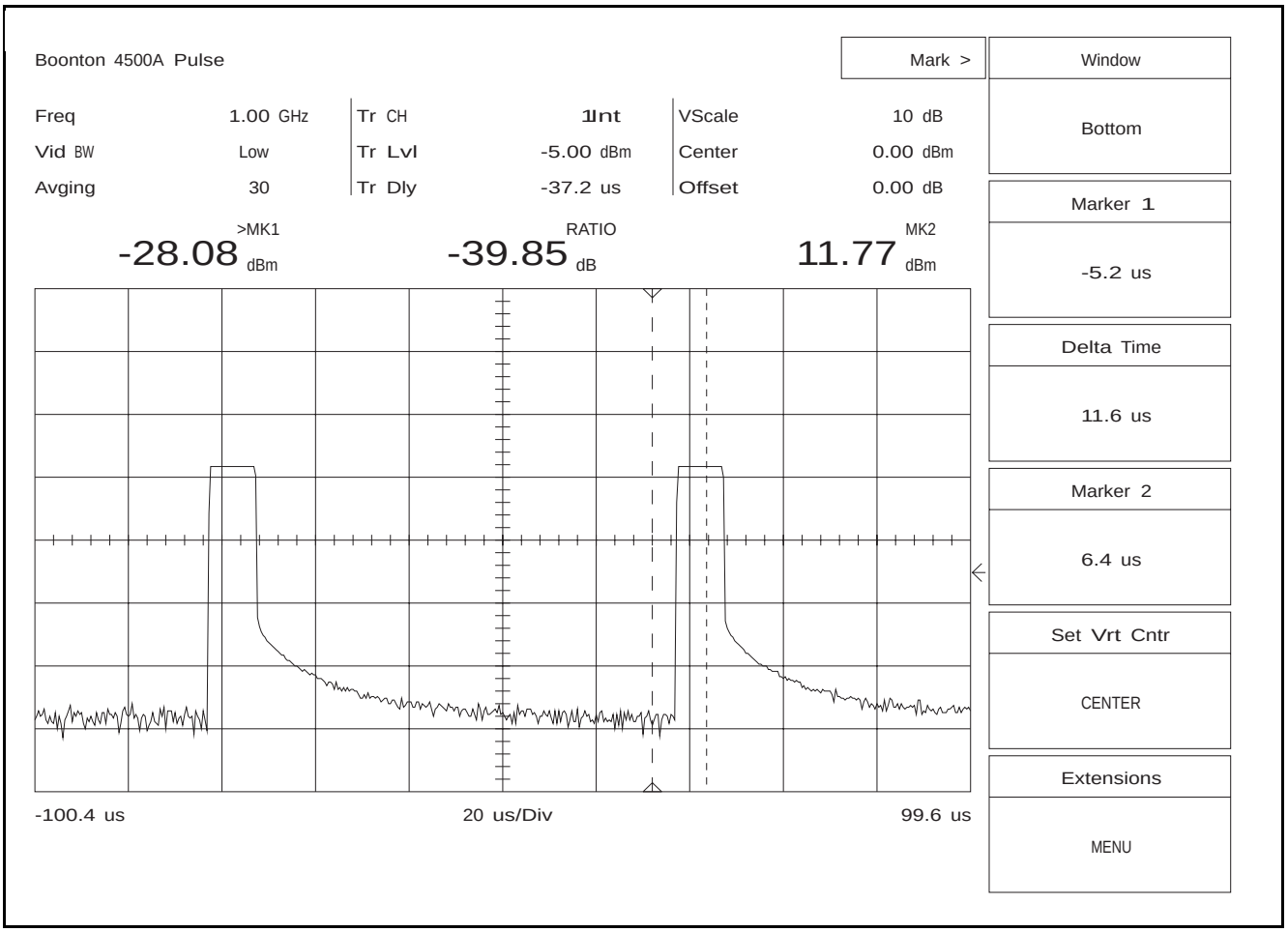


Figure B-1. Sample Output Plot

# Instructions for connecting the Boonton Model 4400A/4500A to the HP 7475A plotter on the RS-232.

1) Cable Specification:

The 4400A/4500A provides an output compatible with RS-232 - C/CCITT V.24.
A cable providing the connections shown below is required.

| *Signal Name* | | *4400A/4500A DB9 female pin no.* | *Printer DB25 male pin no.* | |
|---|---|---|---|---|
| Data Carrier Detect | DCD | 1 | 8 | DCD |
| Receive Data | RX | 2 | 2 | TX |
| Transmit Data | TX | 3 | 3 | RX |
| Data Terminal Ready | DTR | 4 | 20 | DTR |
| Signal Ground | GND | 5 | 7 | GND |
| Data Set Ready | DSR | 6 | 22 | RI |
| Request To Send | RTS | 7 | 5 | CTS |
| Clear To Send | CTS | 8 | 4 | RTS |
| Ring Indicator | RI | 9 | 6 | DSR |

*Unused pins not shown*

2) Interconnection Diagram:

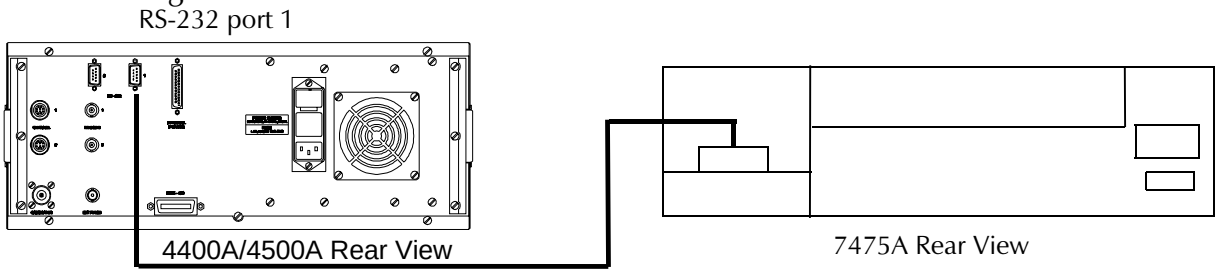


3) Instrument Configuration:

The COM 1 RS-232 port should be configured in the UTIL > COM 1 > Menu to be:

| | |
|---|---|
| Baud Rate | 9600 |
| Length | 8 |
| Stop Bits | 1 |
| Parity | None |
| Handshake | None |
| X On – X Off | On |

The Output Device should be selected in the UTIL > Hardcopy > Menu to be:

| | |
|---|---|
| Device | Plotter |
| Device Type | HP7475 |
| Output Port | COM 1 |
| Plot Label | On/Off |
| Graph & Text | On/Off |

4) 7475 Switch Configuration:

The 7475A RS-232 port is configured from a bitswitch located near the RS-232 cable connector on the rear of the plotter.

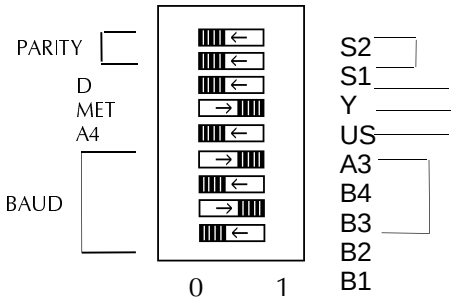


This switch setting configures the plotter for:

| | |
|---|---|
| '0' | No Parity [S2 & S1] |
| 'D' | endline operating environment |
| 'US' | US standard size paper (not metric) |
| 'A4' | A size paper format |
| 'A' | Baud rate of 9600 [B4, B3, B2, B1] |

# Instructions for connecting the Boonton Model 4400A/4500A to the Fujitsu model FPG-310 plotter on the RS-232.

1) Cable specification:

The 4400A/4500A provides an output compatible with RS-232 - C/CCITT V.24.
A cable providing the connections shown below is required.

| *Signal Name* | | *4400A/4500A DB9 female pin no.* | *Plotter DB25 male pin no.* | |
|---|---|---|---|---|
| Data Carrier Detect | DCD | 1 | 8 | DCD |
| Receive Data | RX | 2 | 2 | TX |
| Transmit Data | TX | 3 | 3 | RX |
| Data Terminal Ready | DTR | 4 | 20 | DTR |
| Signal Ground | GND | 5 | 7 | GND |
| Data Set Ready | DSR | 6 | 22 | RI |
| Request To Send | RTS | 7 | 5 | CTS |
| Clear To Send | CTS | 8 | 4 | RTS |
| Ring Indicator | RI | 9 | 6 | DSR |

*Unused pins not shown*

2) Interconnection Diagram:

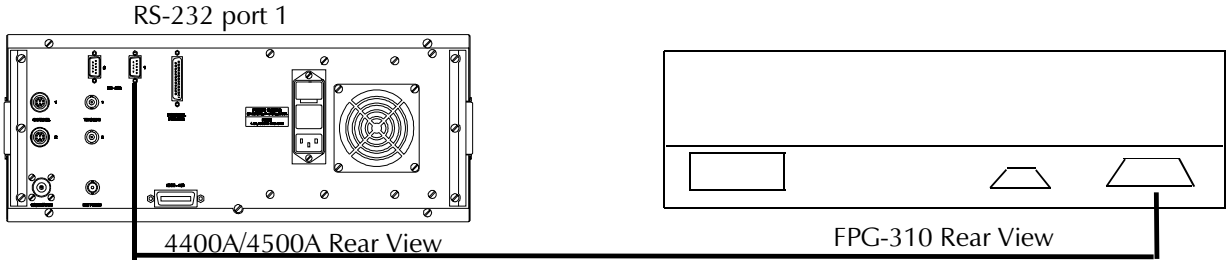


3) Instrument Configuration:

The COM 1 RS-232 port should be configured in the UTIL > COM 1 > Menu to be:

| | |
|---|---|
| Baud Rate | 9600 |
| Length | 8 |
| Stop Bits | 1 |
| Parity | None |
| Handshake | None |
| X On – X Off | On |

The Output Device should be selected in the UTIL > Hardcopy > Menu to be:

| | |
|---|---|
| Device | Plotter |
| Device Type | FPG310 |
| Output Port | COM 1 |
| Plot Label | On/Off |
| Graph & Text | On/Off |

4) FPG-310 Switch Configuration:

The FPG-310 RS-232 port is configured from three bitswitches. They are designated DSW1, DSW2 and DSW3. DSW1 and DSW2 are located near the pen holder beneath the cover on the front left side of the plotter while DSW3 is located on the rear of the plotter near the RS-232 connector.

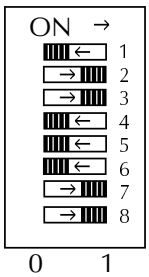


PAPER SIZE
PAPER SIZE
Always ON
ROTATE OFF
STANDARD
Detect OFF
Memory 12kB
Always ON

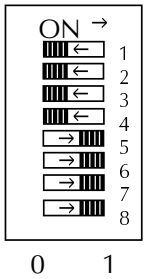


PARITY
PARITY TYPE
STOP BITS
DATA & BITS
9600 BAUD

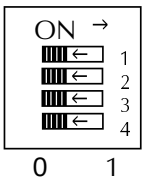


DTR CONTROL
RTS always ON
CTS ignore
DSR ignore

# Instructions for connecting the Boonton Model 4400A/4500A to the Hewlett Packard LaserJet II Printer on RS-232.

1) Cable Specification:

The 4400A/4500A provides an output compatible with RS-232 using a DB-9.
A cable providing the connections to a DB25 are shown below.

| *Signal Name* | | *4400A/4500A DB9 female pin no.* | *Printer DB25 male pin no.* | |
|---|---|---|---|---|
| Data Carrier Detect | DCD | 1 | 8 | DCD |
| Receive Data | RX | 2 | 2 | TX |
| Transmit Data | TX | 3 | 3 | RX |
| Data Terminal Ready | DTR | 4 | 20 | DTR |
| Signal Ground | GND | 5 | 7 | GND |
| Data Set Ready | DSR | 6 | 22 | RI |
| Request To Send | RTS | 7 | 5 | CTS |
| Clear To Send | CTS | 8 | 4 | RTS |
| Ring Indicator | RI | 9 | 6 | DSR |

*Unused pins not shown*

2) Interconnection Diagram:

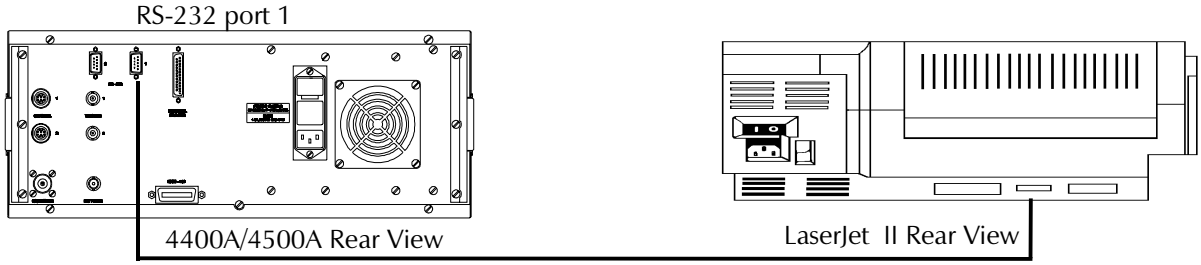


3) Instrument Configuration:

The COM 1 RS-232 port should be configured in the UTIL > COM 1 > Menu to be:

| | |
|---|---|
| Baud Rate | 19200 |
| Length | 8 |
| Stop Bits | 1 |
| Parity | None |
| Handshake | None |
| X On – X Off | On |

The Output Device should be selected in the UTIL > Hardcopy > Menu to be:

| | |
|---|---|
| Device | Printer |
| Device Type | LaserJet II |
| Output Port | COM 1 |
| Plot Label | On/Off |
| Graph & Text | On/Off |

4) LaserJet II Configuration:

The LaserJet II is configured to use the RS-232 interface as follows:

TAKE printer off-line.
PRESS MENU key until I/O = SERIAL* is displayed. (If I/O = PARALLEL* is displayed, press the + key to change the display to I/O = SERIAL and press the ENTER RESET MENU key to save the selection. An * will appear in the display).
PRESS the MENU key to show BAUD RATE = 19200*. (Press the + or- key to change the baud rate to match.
PRESS the ENTER RESET MENU key to save the selection.
An * will appear in the display).
PRESS the MENU key to show ROBUST XON = ON*. (If ROBUST XON = OFF* appears, use the + key to change and press the ENTER RESET MENU key to save the selection.
An * will appear in the display).
PUT printer back on line.

# Instructions for connecting the Boonton Model 4400A/4500A to the Hewlett Packard ThinkJet Printer on IEEE-488.

1) Cable Specification:

The 4400A/4500A provides an output compatible with IEEE-488. For plotting on the IEEE-488 the "REN" line can not be asserted by any device on the bus. This means there is no conroller active. The 4400A/4500A does not support passing control on the bus. The output device must be set to "Listen Only" or to Address 30. The 4400A/4500A address should not be set to 30.

2) Interconnection Diagram:

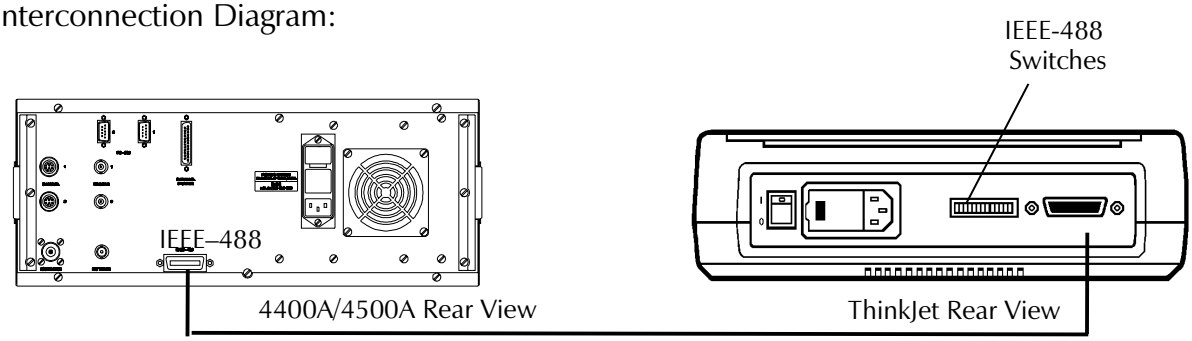


3) Instrument Configuration:

The Output Device should be selected
in the UTIL > Hardcopy > Menu to be:

| | |
|---|---|
| Device | Printer |
| Device Type | ThinkJet |
| Output Port | IEEE–488 |
| Plot Label | On/Off |
| Graph & Text | On/Off |

4) ThinkJet Switch Configuration:

The ThinkJet IEEE-488 port is configured from a bitswitch located near the IEEE-488 cable connector on the rear of the printer.

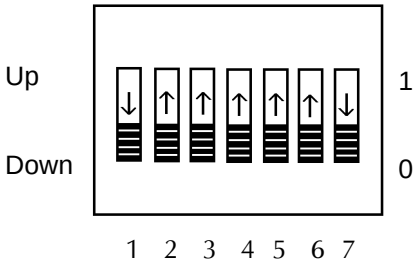


*Bitswitch Numbers from left:*

*1 SRQ Disable*
*2 Listen Only*
*3*
*4*
*5* } Address 30
*6*
*7*

# Instructions for connecting the Boonton Model 4400A/4500A to the Hewlett Packard ThinkJet Printer on the RS-232.

1) Cable Specification:

The 4400A/4500A provides an output compatible with RS-232 using a DB-9.
A cable providing the connections to a DB-9 are shown below.

| *Signal Name* | | *4400A/4500A DB9 female pin no.* | *Printer DB25 male pin no.* | |
|---|---|---|---|---|
| Data Carrier Detect | DCD | 1 | 8 | DCD |
| Receive Data | RX | 2 | 2 | TX |
| Transmit Data | TX | 3 | 3 | RX |
| Data Terminal Ready | DTR | 4 | 20 | DTR |
| Signal Ground | GND | 5 | 7 | GND |
| Data Set Ready | DSR | 6 | 22 | RI |
| Request To Send | RTS | 7 | 5 | CTS |
| Clear To Send | CTS | 8 | 4 | RTS |
| Ring Indicator | RI | 9 | 6 | DSR |

*Unused pins not shown*

2) Interconnection Diagram:

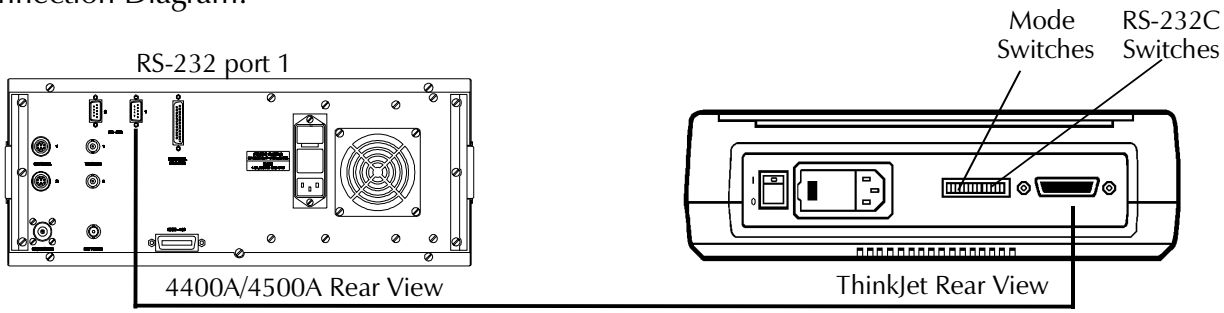


3) Instrument Configuration:

The 4400A/4500A RS-232 port should be configured in the UTIL > COM 1 > Menu to be:

| | |
|---|---|
| Baud Rate | 9600 |
| Length | 8 |
| Stop Bits | 1 |
| Parity | None |
| Handshake | None |
| X On – X Off | On |

The Output Device should be selecte
in the UTIL > Hardcopy > Menu to b

| | |
|---|---|
| Device | Printer |
| Device Type | ThinkJet |
| Output Port | COM 1 |
| Plot Label | On/Off |
| Graph & Text | On/Off |

4) ThinkJet Switch Configuration:

The ThinkJet RS-232 port is configured from a bitswitch located near the RS-232 cable connector on the rear of the printer.

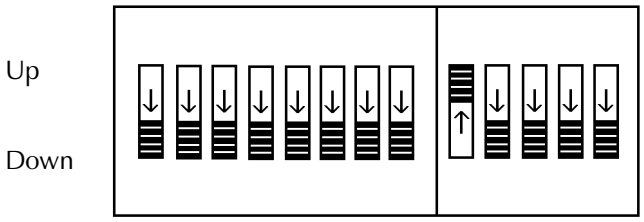


*Bitswitch Numbers from left:*

1 CR = CR
2 LF = LF
3 No Perforation, Skip
4 11 inch paper
5 HP mode
6, 7, 8 } ASCII Roman

1 DTR (X On X Off)
2, 3 } No Parity 8
4, 5 } 9600 Baud

# Appendix C
# Repair and Warranty

This appendix states the repair and warranty policies that apply to the Models 4400A/4500A.

## C.1 Repair Policy

### Model 4400A/4500A Instrument

If the Boonton Model 4400A/4500A is not operating correctly and requires service, contact the Boonton Electronics Service Department for return authorization. You will be provided with an RMA number and shipping instructions. Customers outside the USA should contact the authorized Boonton distributor for your area. The entire instrument must be returned in its original packing container. If the original container is not available, Boonton Electronics will ship a replacement container and you will be billed for the container cost and shipping charges.

### Boonton Peak Power Sensors

Damaged or defective peak power sensors are repaired as separate accessories. Note that sensors which have failed due to overloading are not considered defective and will not be covered by the Boonton Warranty. If repair is needed, contact the Boonton Electronics Service Department for return authorization. You will be provided with an RMA number and shipping instructions. Customers outside the USA should contact the authorized Boonton distributor for your area. Only the defective sensor should be returned to Boonton, not the entire instrument. The sensor must be returned in its original packing container. If the original container is not available, Boonton Electronics will ship a replacement container and you will be billed for the container cost and shipping charges. If a new sensor is ordered, note that it does not include a sensor cable - this item must be ordered separately.

### Contacting Boonton

Customers in the United States having questions or equipment problems may contact Boonton Electronics directly during business hours (8 AM to 5 PM Eastern) by phoning (973) 386-9696. FAX messages may be sent at any time to (973) 386-9191. International customers should contact their authorized Boonton Electronics representative for assistance. A list of authorized US and international representatives is provided in Appendix C.

## C.2 Warranty

Boonton Electronics Corporation warrants its products to the original Purchaser to be free from defects in material and workmanship and to operate within applicable specifications for a period of one year from date of shipment for instruments, probes, power sensors and accessories. Boonton Electronics further warrants that its instruments will perform within all current specifications under normal use and service for one year from date of shipment. These warranties do not cover active devices that have given normal service, sealed assemblies which have been opened, or any item which has been repaired or altered without Boonton's authorization.

Boonton's warranties are limited to either the repair or replacement, at Boonton's option, of any product found to be defective under the terms of these warranties.

There will be no charge for parts and labor during the warranty period. The Purchaser shall prepay shipping charges to Boonton or its designated service facility and shall return the product in its original or an equivalent shipping container. Boonton or its designated service facility shall pay shipping charges to return the product to the Purchaser. The Purchaser shall pay all shipping charges, duties and taxes if a product is returned to Boonton from outside of the United States.

THE FOREGOING WARRANTIES ARE IN LIEU OF ALL OTHER WARRANTIES, EXPRESS OR IMPLIED, INCLUDING, BUT NOT LIMITED TO, THE IMPLIED WARRANTIES OF MERCHANTABILITY AND FITNESS FOR A PARTICULAR PURPOSE. Boonton will not be liable for any incidental damages or for any consequential damages, as defined in Section 2-715 of the Uniform Commercial Code, in connection with products covered by the foregoing warranties.

# Appendix D

## Sensor Performance Specifications

This appendix details the sensor performance specifications that apply to the Models 4400A/4500A.

Tables D-1 through D-17 give the sensor specifications by sensor number.

Table D-18 outlines the sensor cable length effect on risetime specifications.

## Table D-1 Model 56218 Sensor Performance Specifications†

| Parameter | Specification | |
|---|---|---|
| Frequency Range | 0.03 to 18 GHz | |
| Risetime (10% - 90%): | | |
| High Bandwidth | <150 ns* | |
| Low Bandwidth | <500 ns | |
| Power Range: | | |
| Pulse | -24 to +20 dBm | |
| CW | -34 to +20 dBm | |
| Internal Trigger Range | -10 to +20 dBm | |
| Minimum Internal Trigger Pulse Width: | | |
| High Bandwidth | <300 ns | |
| Low Bandwidth | <1 µs | |
| Maximum Power Input: | | |
| Continuous Power | 200 mW (+23 dBm) | |
| Peak Power | 1W (+30 dBm) for 1µs | |
| Shaping Error | ±1.2% | |
| Calibration Factor Uncertainty: | | |
| | Worst Case (%) | RSS (%) |
| to 1.0 GHz | ±3.0 | ±1.6 |
| to 2.0 GHz | ±3.6 | ±2.2 |
| to 4.0 GHz | ±3.8 | ±2.3 |
| to 7.0 GHz | ±4.3 | ±2.6 |
| to 12.0 GHz | ±4.7 | ±2.9 |
| to 18.0 GHz | ±4.9 | ±3.0 |
| Input SWR (Refl. Coeff.): | | |
| 0.03 to 2 GHz | 1.15 (0.070) | |
| 2 to 6 GHz | 1.20 (0.091) | |
| 6 to 18 GHz | 1.25 (0.111) | |
| Noise and Drift: | | |
| Pulse mode | 4 µW (100 samples) | |
| CW mode after CW Zero | 0.4 µW (10 samples) | |
| Connector | Type N | |

†Specifications subject to change without notice.

***Typical Risetime in High BW Mode**

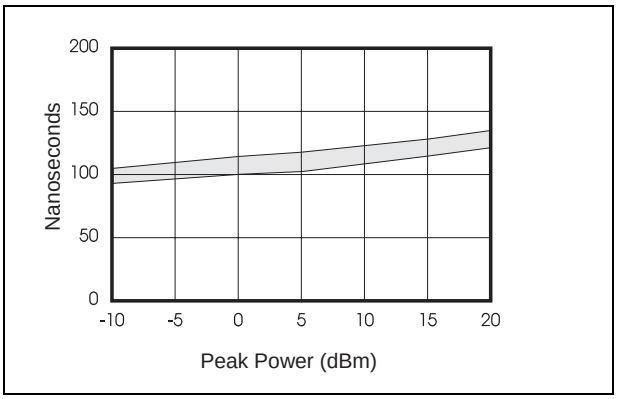


**Temperature Influence (±4° from calibration)**

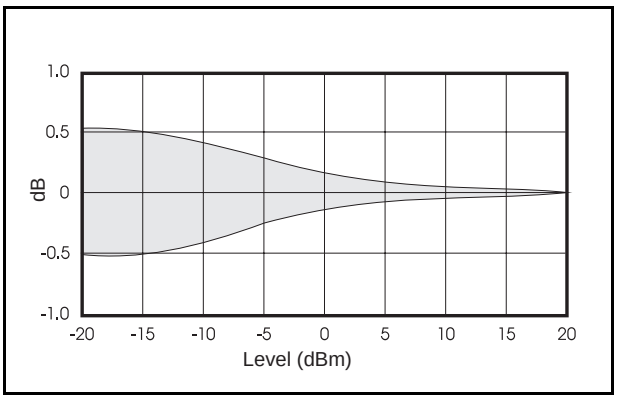

## Table D-2 Model 56218-S/1 Sensor Performance Specifications

| Parameter | Specification | |
|---|---|---|
| Frequency Range | 0.04 to 18 GHz | |
| Risetime (10% - 90%): | | |
| High Bandwidth | <60 ns | |
| Low Bandwidth | <250 ns | |
| Power Range: | | |
| Pulse | -24 to +20 dBm | |
| CW | -34 to +20 dBm | |
| Internal Trigger Range | -10 to +20 dBm | |
| Minimum Internal Trigger Pulse Width: | | |
| High Bandwidth | <120 ns | |
| Low Bandwidth | <500 ns | |
| Maximum Power Input: | | |
| Continuous Power | 200 mW (+23 dBm) | |
| Peak Power | 1W (+30 dBm) for 1µs | |
| Shaping Error | ±1.2% | |
| Calibration Factor Uncertainty: | | |
| | Worst Case (%) | RSS (%) |
| to 1.0 GHz | ±3.0 | ±1.6 |
| to 2.0 GHz | ±3.6 | ±2.2 |
| to 4.0 GHz | ±3.8 | ±2.3 |
| to 7.0 GHz | ±4.3 | ±2.6 |
| to 12.0 GHz | ±4.7 | ±2.9 |
| to 18.0 GHz | ±4.9 | ±3.0 |
| Input SWR (Refl. Coeff.): | | |
| 0.03 to 2 GHz | 1.15 (0.070) | |
| 2 to 6 GHz | 1.20 (0.091) | |
| 6 to 18 GHz | 1.25 (0.111) | |
| Noise and Drift: | | |
| Pulse mode | 4 µW (100 samples) | |
| CW mode after CW Zero | 0.4 µW (10 samples) | |
| Connector | Type N | |

Specifications subject to change without notice.

***Typical Risetime in High BW Mode**

**50 nS**

**Temperature Influence (±4° from calibration)**

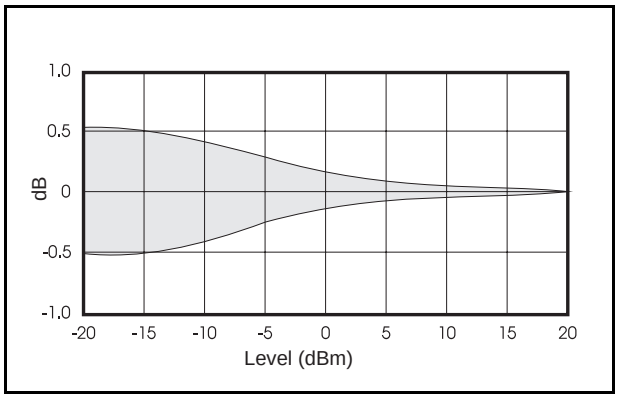

## Table D-3 Model 56218-S/3 Sensor Performance Specifications†

| Parameter | Specification | |
|---|---|---|
| Frequency Range | 0.03 to 18 GHz | |
| Risetime (10% - 90%): | | |
| High Bandwidth | <150 ns* | |
| Low Bandwidth | <500 ns | |
| Power Range: | | |
| Pulse | -24 to +20 dBm | |
| CW | -40 to +20 dBm | |
| Internal Trigger Range | -10 to +20 dBm | |
| Minimum Internal Trigger Pulse Width: | | |
| High Bandwidth | <300 ns | |
| Low Bandwidth | <1 µs | |
| Maximum Power Input: | | |
| Continuous Power | 200 mW (+23 dBm) | |
| Peak Power | 1W (+30 dBm) for 1µs | |
| Shaping Error | ±1.2% | |
| Calibration Factor Uncertainty: | | |
| | Worst Case (%) | RSS (%) |
| to 1.0 GHz | ±3.0 | ±1.6 |
| to 2.0 GHz | ±3.6 | ±2.2 |
| to 4.0 GHz | ±3.8 | ±2.3 |
| to 7.0 GHz | ±4.3 | ±2.6 |
| to 12.0 GHz | ±4.7 | ±2.9 |
| to 18.0 GHz | ±4.9 | ±3.0 |
| Input SWR (Refl. Coeff.): | | |
| 0.03 to 2 GHz | 1.15 (0.070) | |
| 2 to 6 GHz | 1.20 (0.091) | |
| 6 to 18 GHz | 1.25 (0.111) | |
| Noise and Drift: | | |
| Pulse mode | 4 µW (100 samples) | |
| CW mode after CW Zero | 0.05 µW (10 samples) | |
| Connector | Type N | |

†Specifications subject to change without notice.

***Typical Risetime in High BW Mode**

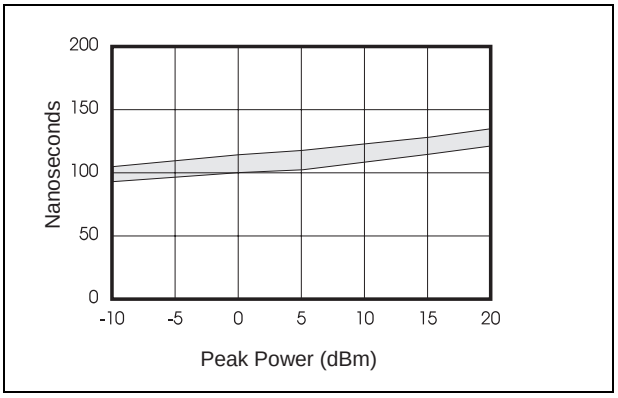


**Temperature Influence (±4° from calibration)**

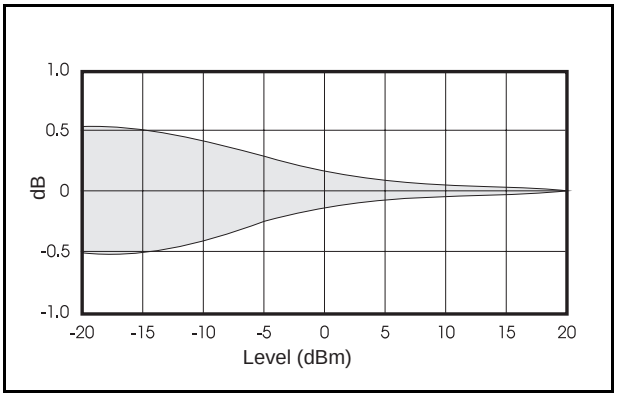

## Table D-4 Model 56218-S/4 Sensor Performance Specifications†

| Parameter | Specification | |
|---|---|---|
| Frequency Range | 1 MHz to 18 GHz | |
| Risetime (10% - 90%): | | |
| High Bandwidth | <1.5 us (240 kHz min) | |
| Low Bandwidth | <2.0 us (180 kHz min) | |
| Power Range: | | |
| Pulse | -24 to +20 dBm | |
| CW | -34 to +20 dBm | |
| Internal Trigger Range | -10 to +20 dBm | |
| Minimum Internal Trigger Pulse Width: | | |
| High Bandwidth | 3 us | |
| Low Bandwidth | 4 us | |
| Maximum Power Input: | | |
| Continuous Power | 200 mW (+23 dBm) | |
| Peak Power | 1W (+30 dBm) for 1µs | |
| Shaping Error | ±.2.3% | |
| Calibration Factor Uncertainty: | | |
| | Worst Case (%) | RSS (%) |
| to 1.0 GHz | ±3.0 | ±1.6 |
| to 2.0 GHz | ±3.6 | ±2.2 |
| to 4.0 GHz | ±3.8 | ±2.3 |
| to 7.0 GHz | ±4.3 | ±2.6 |
| to 12.0 GHz | ±4.7 | ±2.9 |
| to 18.0 GHz | ±4.9 | ±3.0 |
| Input SWR (Refl. Coeff.): | | |
| 1 MHz to 2 GHz | 1.15 (0.070) | |
| 2 to 6 GHz | 1.20 (0.091) | |
| 6 to 18 GHz | 1.25 (0.111) | |
| Noise and Drift: | | |
| Pulse mode | 4 µW (100 samples) | |
| CW mode after CW Zero | 0.4 µW (10 samples) | |
| Connector | Type N | |

†Specifications subject to change without notice.

**Temperature Influence (±4° from calibration)**

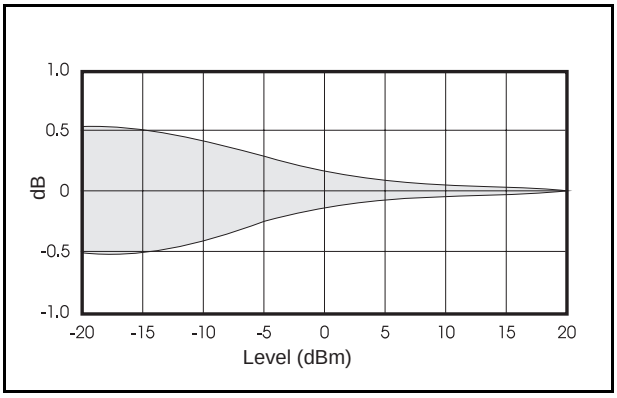

## Table D- 5 Model 56218-S/5 Sensor Performance Specifications†

| Parameter | Specification | |
|---|---|---|
| Frequency Range | 1 MHz to 18 GHz | |
| Risetime (10% - 90%): | | |
| High Bandwidth | <3.0 us (120 kHz min) | |
| Low Bandwidth | <3.9 us ( 90 kHz min) | |
| Power Range: | | |
| Pulse | -24 to +20 dBm | |
| CW | -34 to +20 dBm | |
| Internal Trigger Range | -10 to +20 dBm | |
| Minimum Internal Trigger Pulse Width: | | |
| High Bandwidth | 6 us | |
| Low Bandwidth | 8 us | |
| Maximum Power Input: | | |
| Continuous Power | 200 mW (+23 dBm) | |
| Peak Power | 1W (+30 dBm) for 1µs | |
| Shaping Error | ±.2.3% | |
| Calibration Factor Uncertainty: | | |
| | Worst Case (%) | RSS (%) |
| to 1.0 GHz | ±3.0 | ±1.6 |
| to 2.0 GHz | ±3.6 | ±2.2 |
| to 4.0 GHz | ±3.8 | ±2.3 |
| to 7.0 GHz | ±4.3 | ±2.6 |
| to 12.0 GHz | ±4.7 | ±2.9 |
| to 18.0 GHz | ±4.9 | ±3.0 |
| Input SWR (Refl. Coeff.): | | |
| 1 MHz to 2 GHz | 1.15 (0.070) | |
| 2 to 6 GHz | 1.20 (0.091) | |
| 6 to 18 GHz | 1.25 (0.111) | |
| Noise and Drift: | | |
| Pulse mode | 4 µW (100 samples) | |
| CW mode after CW Zero | 0.4 µW (10 samples) | |
| Connector | Type N | |

†Specifications subject to change without notice.

**Temperature Influence (±4° from calibration)**

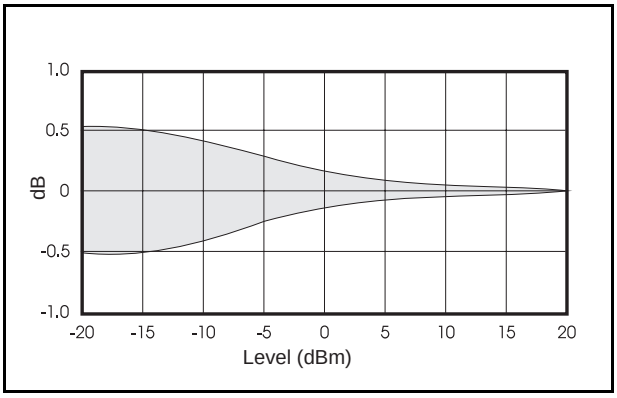

## Table D-6 Model 56318 Sensor Performance Specifications†

| Parameter | Specification | |
|---|---|---|
| Frequency Range | 0.5 to 18 GHz | |
| Risetime (10% - 90%): | | |
| High Bandwidth | <15 ns* | |
| Low Bandwidth | <200 ns | |
| Power Range: | | |
| Pulse | -24 to +20 dBm | |
| CW | -34 to +20 dBm | |
| Internal Trigger Range | -10 to +20 dBm | |
| Minimum Internal Trigger Pulse Width: | | |
| High Bandwidth | <30 ns | |
| Low Bandwidth | <400 ns | |
| Maximum Power Input: | | |
| Continuous Power | 200 mW (+23 dBm) | |
| Peak Power | 1W (+30 dBm) for 1µs | |
| Shaping Error | | |
| 0.5 to 18 GHz | ±1.2% | |
| Calibration Factor Uncertainty: | | |
| | Worst Case (%) | RSS (%) |
| to 1.0 GHz | ±3.0 | ±1.6 |
| to 2.0 GHz | ±3.6 | ±2.2 |
| to 4.0 GHz | ±3.8 | ±2.3 |
| to 7.0 GHz | ±4.3 | ±2.6 |
| to 12.0 GHz | ±4.7 | ±2.9 |
| to 18.0 GHz | ±4.9 | ±3.0 |
| Input SWR (Refl. Coeff.): | | |
| 0.5 to 2 GHz | 1.15 (0.070) | |
| 2 to 6 GHz | 1.20 (0.091) | |
| 6 to 16 GHz | 1.28 (0.123) | |
| 16 to 18 GHz | 1.34 (0.145) | |
| Noise and Drift: | | |
| Pulse mode | 4 µW (100 samples) | |
| CW mode after CW Zero | 0.4 µW (10 samples) | |
| Connector | Type N | |

†Specifications subject to change without notice.

***Typical Risetime in High BW Mode**

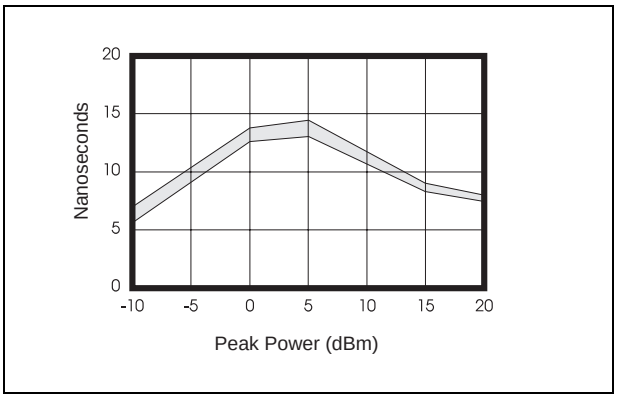


**Temperature Influence (±4° from calibration)**

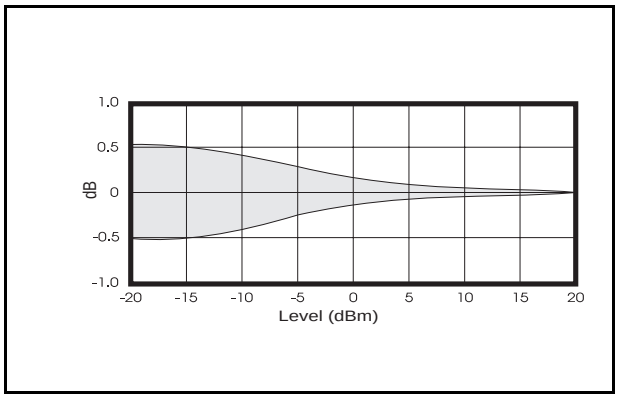

## Table D-7 Model 56318-S/1 Sensor Performance Specifications†

| Parameter | Specification | |
|---|---|---|
| Frequency Range | 0.2 to 18 GHz | |
| Risetime (10% - 90%): | | |
| High Bandwidth | <15 ns* | |
| Low Bandwidth | <200 ns | |
| Power Range: | | |
| Pulse | -24 to +20 dBm | |
| CW | -34 to +20 dBm | |
| Internal Trigger Range | -10 to +20 dBm | |
| Minimum Internal Trigger Pulse Width: | | |
| High Bandwidth | <30 ns | |
| Low Bandwidth | <400 ns | |
| Maximum Power Input: | | |
| Continuous Power | 200 mW (+23 dBm) | |
| Peak Power | 1W (+30 dBm) for 1µs | |
| Shaping Error | | |
| 0.2 to 0.5 GHz | ±3.9% | |
| 0.5 to 18 GHz | ±1.2% | |
| Calibration Factor Uncertainty: | | |
| | Worst Case (%) | RSS (%) |
| to 1.0 GHz | ±3.0 | ±1.6 |
| to 2.0 GHz | ±3.6 | ±2.2 |
| to 4.0 GHz | ±3.8 | ±2.3 |
| to 7.0 GHz | ±4.3 | ±2.6 |
| to 12.0 GHz | ±4.7 | ±2.9 |
| to 18.0 GHz | ±4.9 | ±3.0 |
| Input SWR (Refl. Coeff.): | | |
| 0.2 to 0.5 GHz | 1.25 (0.111) | |
| 0.5 to 2 GHz | 1.15 (0.070) | |
| 2 to 6 GHz | 1.20 (0.091) | |
| 6 to 16 GHz | 1.28 (0.123) | |
| 16 to 18 GHz | 1.34 (0.145) | |
| Noise and Drift: | | |
| Pulse mode | 4 µW (100 samples) | |
| CW mode after CW Zero | 0.4 µW (10 samples) | |
| Connector | Type N | |

†Specifications subject to change without notice.

***Typical Risetime in High BW Mode**

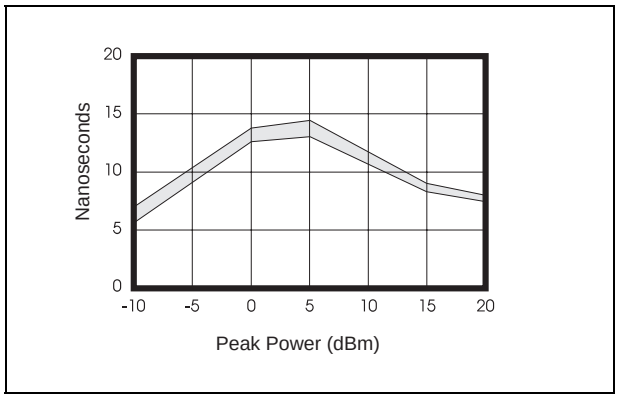


**Temperature Influence (±4° from calibration)**

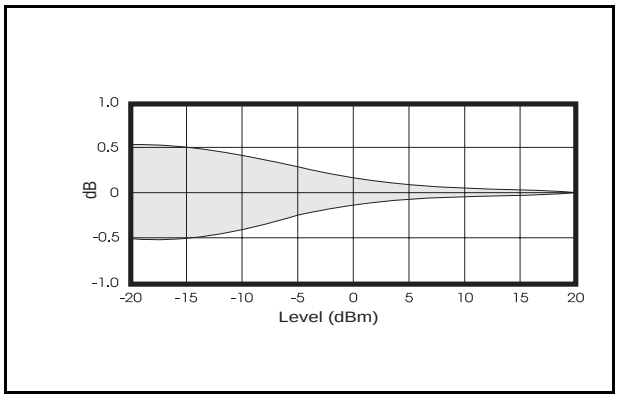

## Table D-8 Model 56326 Sensor Performance Specifications†

| Parameter | Specification | |
|---|---|---|
| Frequency Range | 0.5 to 26.5 GHz | |
| Risetime (10% - 90%): | | |
| High Bandwidth | <15 ns* | |
| Low Bandwidth | <200 ns | |
| Power Range: | | |
| Pulse | -24 to +20 dBm | |
| CW | -34 to +20 dBm | |
| Internal Trigger Range | -10 to +20 dBm | |
| Minimum Internal Trigger Pulse Width: | | |
| High Bandwidth | <30 ns | |
| Low Bandwidth | <400 ns | |
| Maximum Power Input: | | |
| Continuous Power | 200 mW (+23 dBm) | |
| Peak Power | 1W (+30 dBm) for 1µs | |
| Shaping Error | ±1.2% | |
| Calibration Factor Uncertainty: | | |
| | Worst Case (%) | RSS (%) |
| to 1.0 GHz | ±3.0 | ±1.6 |
| to 2.0 GHz | ±3.6 | ±2.2 |
| to 4.0 GHz | ±3.8 | ±2.3 |
| to 7.0 GHz | ±4.4 | ±2.6 |
| to 12.0 GHz | ±4.8 | ±2.9 |
| to 18.0 GHz | ±4.9 | ±3.1 |
| to 26.5 GHz | ±6.1 | ±4.0 |
| Input SWR (Refl. Coeff.): | | |
| 0.5 to 2 GHz | 1.15 (0.070) | |
| 2 to 4 GHz | 1.20 (0.091) | |
| 4 to 18 GHz | 1.45 (0.184) | |
| 18 to 26.5 GHz | 1.50 (0.200) | |
| Noise and Drift: | | |
| Pulse mode | 4 µW (100 samples) | |
| CW mode after CW Zero | 0.4 µW (10 samples) | |
| Connector | Type K | |

†Specifications subject to change without notice.

***Typical Risetime in High Bandwidth Mode**

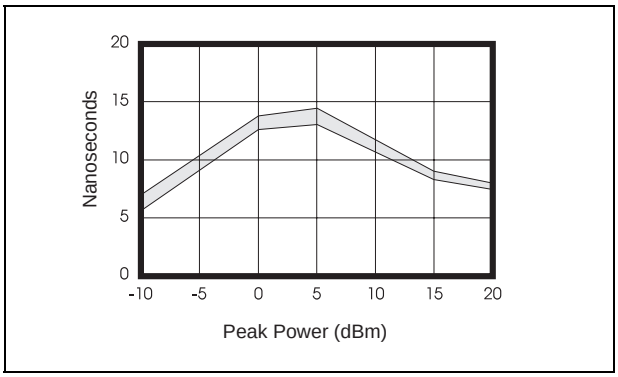


**Temperature Influence (±4° from calibration)**

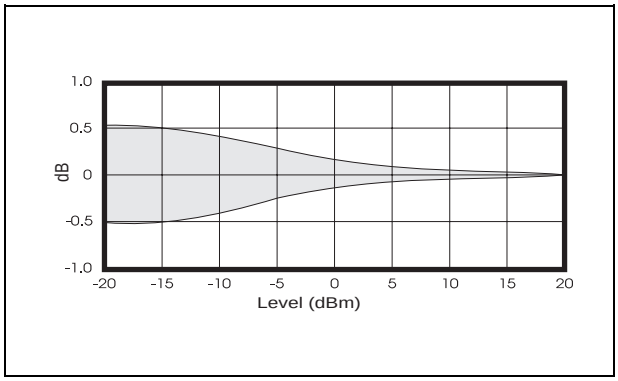

## Table D-9 Model 56340 Sensor Performance Specifications†

| Parameter | Specification | |
|---|---|---|
| Frequency Range | 0.5 to 40 GHz | |
| Risetime (10% - 90%): | | |
| High Bandwidth | <15 ns* | |
| Low Bandwidth | <200 ns | |
| Power Range: | | |
| Pulse | -24 to +20 dBm | |
| CW | -34 to +20 dBm | |
| Internal Trigger Range | -10 to +20 dBm | |
| Minimum Internal Trigger Pulse Width: | | |
| High Bandwidth | <30ns | |
| Low Bandwidth | <400ns | |
| Maximum Power Input: | | |
| Continuous Power | 200 mW (+23 dBm) | |
| Peak Power | 1W (+30 dBm) for 1µs | |
| Shaping Error | ±1.2% | |
| Calibration Factor Uncertainty: | | |
| | Worst Case (%) | RSS (%) |
| to 4.0 GHz | ± 2.8 | ± 2.0 |
| to 6.0 GHz | ± 4.9 | ± 3.5 |
| to 12.0 GHz | ± 5.5 | ± 3.8 |
| to 19.0 GHz | ± 6.8 | ± 4.5 |
| to 26.5 GHz | ± 8.2 | ± 5.5 |
| to 30.0 GHz | ± 8.9 | ± 6.2 |
| to 40.0 GHz | ± 11.5 | ± 7.7 |
| Input SWR (Refl. Coeff.): | | |
| 0.5 to 4 GHz | 1.25 (0.111) | |
| 4 to 38 GHz | 1.65 (0.245) | |
| 38 to 40 GHz | 2.00 (0.333) | |
| Noise and Drift: | | |
| Pulse mode | 4 µW (100 samples) | |
| CW mode after CW Zero | 0.4 µW (10 samples) | |
| Connector | Type K | |

†Specifications subject to change without notice.

***Typical Risetime in High Bandwidth Mode**

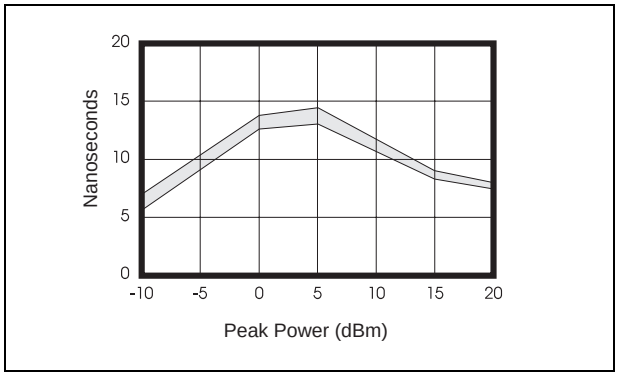


**Temperature Influence (±4° from calibration)**

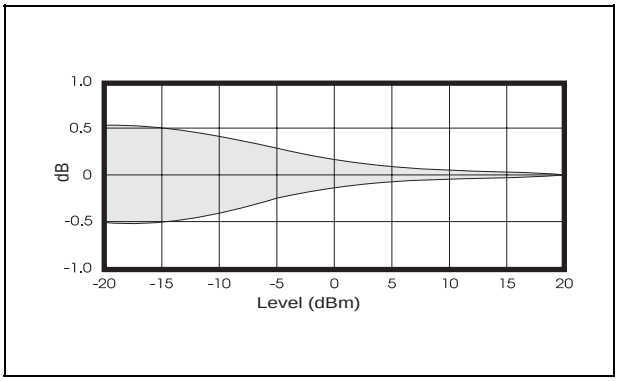

## Table D-10 Model 56340-S/1 Sensor Performance Specifications†

| Parameter | Specification | |
|---|---|---|
| Frequency Range | 0.2 to 40 GHz | |
| Risetime (10% - 90%): | | |
| High Bandwidth | <15 ns* | |
| Low Bandwidth | <200 ns | |
| Power Range: | | |
| Pulse | -24 to +20 dBm | |
| CW | -34 to +20 dBm | |
| Internal Trigger Range | -10 to +20 dBm | |
| Minimum Internal Trigger Pulse Width: | | |
| High Bandwidth | <30ns | |
| Low Bandwidth | <400ns | |
| Maximum Power Input: | | |
| Continuous Power | 200 mW (+23 dBm) | |
| Peak Power | 1W (+30 dBm) for 1µs | |
| Shaping Error | ±1.2% | |
| Calibration Factor Uncertainty: | | |
| | Worst Case (%) | RSS (%) |
| to 4.0 GHz | ± 2.8 | ± 2.0 |
| to 6.0 GHz | ± 4.9 | ± 3.5 |
| to 12.0 GHz | ± 5.5 | ± 3.8 |
| to 19.0 GHz | ± 6.8 | ± 4.5 |
| to 26.5 GHz | ± 8.2 | ± 5.5 |
| to 30.0 GHz | ± 8.9 | ± 6.2 |
| to 40.0 GHz | ± 11.5 | ± 7.7 |
| Input SWR (Refl. Coeff.): | | |
| 0.5 to 4 GHz | 1.25 (0.111) | |
| 4 to 38 GHz | 1.65 (0.245) | |
| 38 to 40 GHz | 2.00 (0.333) | |
| Noise and Drift: | | |
| Pulse mode | 4 µW (100 samples) | |
| CW mode after CW Zero | 0.4 µW (10 samples) | |
| Connector | Type K | |

†Specifications subject to change without notice.

***Typical Risetime in High Bandwidth Mode**

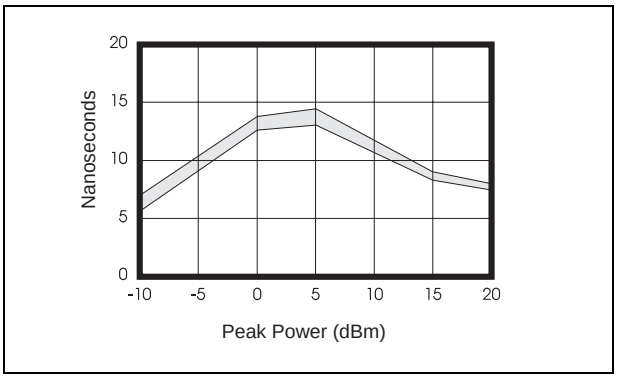


**Temperature Influence (±4° from calibration)**

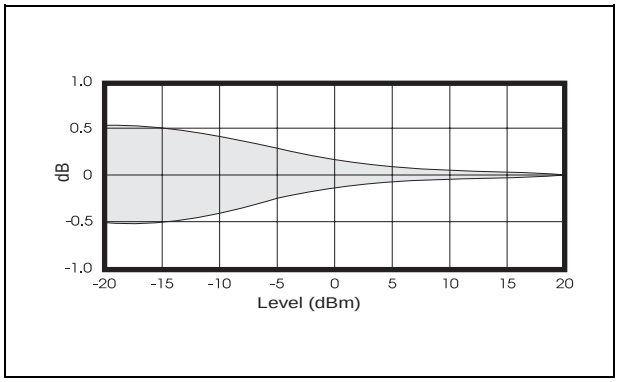

## Table D-11 Model 56340-S/3 Sensor Performance Specifications†

| Parameter | Specification | |
|---|---|---|
| Frequency Range | 0.5 to 40 GHz | |
| Risetime (10% - 90%): | | |
| High Bandwidth | <100 ns* | |
| Low Bandwidth | <300 ns | |
| Power Range: | | |
| Pulse | -24 to +20 dBm | |
| CW | -40 to +20 dBm | |
| Internal Trigger Range | -10 to +20 dBm | |
| Minimum Internal Trigger Pulse Width: | | |
| High Bandwidth | <200ns | |
| Low Bandwidth | <600ns | |
| Maximum Power Input: | | |
| Continuous Power | 200 mW (+23 dBm) | |
| Peak Power | 1W (+30 dBm) for 1µs | |
| Shaping Error | ±1.2% | |
| Calibration Factor Uncertainty: | | |
| | Worst Case (%) | RSS (%) |
| to 4.0 GHz | ± 2.8 | ± 2.0 |
| to 6.0 GHz | ± 4.9 | ± 3.5 |
| to 12.0 GHz | ± 5.5 | ± 3.8 |
| to 19.0 GHz | ± 6.8 | ± 4.5 |
| to 26.5 GHz | ± 8.2 | ± 5.5 |
| to 30.0 GHz | ± 8.9 | ± 6.2 |
| to 40.0 GHz | ± 11.5 | ± 7.7 |
| Input SWR (Refl. Coeff.): | | |
| 0.2 to 4 GHz | 1.25 (0.111) | |
| 4 to 38 GHz | 1.65 (0.245) | |
| 38 to 40 GHz | 2.00 (0.333) | |
| Noise and Drift: | | |
| Pulse mode | 4 µW (100 samples) | |
| CW mode after CW Zero | 0.05 µW (10 samples) | |
| Connector | Type K | |

†Specifications subject to change without notice.

***Typical Risetime in High Bandwidth Mode**

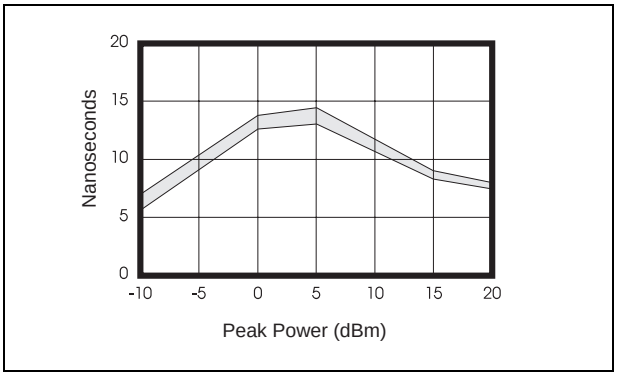


**Temperature Influence (±4° from calibration)**

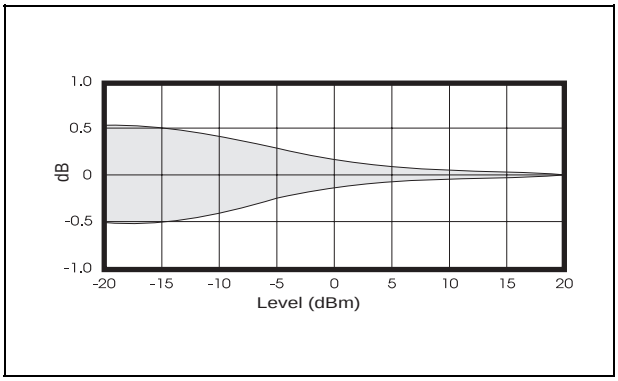

## Table D-12 Model 56418 Sensor Performance Specifications†

| Parameter | Specification | |
|---|---|---|
| Frequency Range | 0.5 to 18 GHz | |
| Risetime (10% - 90%): | | |
| High Bandwidth | <30 ns* | |
| Low Bandwidth | <100 ns | |
| Power Range: | | |
| Pulse | -34 to +5 dBm | |
| CW | -40 to +5 dBm | |
| Internal Trigger Range | -18 to +5 dBm | |
| Minimum Internal Trigger Pulse Width: | | |
| High Bandwidth | <60ns | |
| Low Bandwidth | <200ns | |
| Maximum Power Input: | | |
| Continuous Power | 200 mW (+23 dBm) | |
| Peak Power | 1W (+30 dBm) for 1µs | |
| Shaping Error | ±1.2% | |
| Calibration Factor Uncertainty: | | |
| | Worst Case (%) | RSS (%) |
| to 1.0 GHz | ±3.0 | ±1.6 |
| to 2.0 GHz | ±3.6 | ±2.2 |
| to 4.0 GHz | ±3.8 | ±2.3 |
| to 7.0 GHz | ±4.3 | ±2.6 |
| to 12.0 GHz | ±4.7 | ±2.9 |
| to 18.0 GHz | ±4.9 | ±3.0 |
| Input SWR (Refl. Coeff.) | | |
| 0.5 to 2 GHz | 1.15 (0.070) | |
| 2 to 6 GHz | 1.20 (0.091) | |
| 6 to 16 GHz | 1.28 (0.123) | |
| 16 to 18 GHz | 1.34 (0.145) | |
| Noise and Drift: | | |
| Pulse mode | 400 nW (100 samples) | |
| CW mode after CW Zero | 100 nW (10 samples) | |
| Connector | Type N | |

†Specifications subject to change without notice.

***Typical Risetime in High BW Mode**

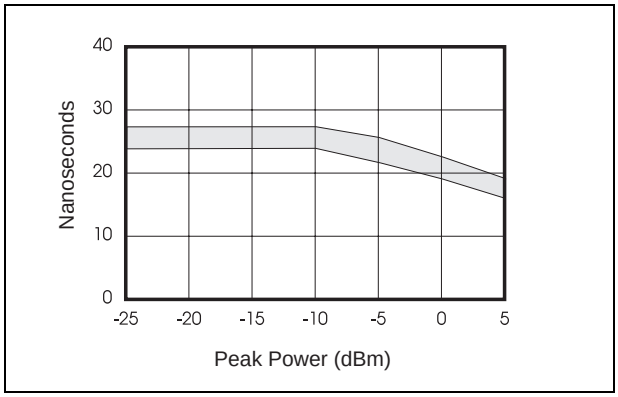


**Temperature Influence (±4° from calibration)**

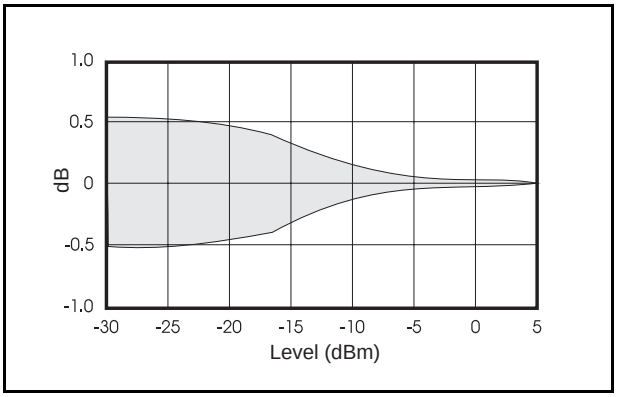

## Table D-13 Model 56518 Sensor Performance Specifications†

| Parameter | Specification | |
|---|---|---|
| Frequency Range | 0.5 to 18 GHz | |
| Risetime (10% - 90%): | | |
| High Bandwidth | <100 ns* | |
| Low Bandwidth | <300 ns | |
| Power Range: | | |
| Pulse | -40 to +20 dBm | |
| CW | -50 to +20 dBm | |
| Internal Trigger Range | -27 to +20 dBm | |
| Minimum Internal Trigger Pulse Width: | | |
| High Bandwidth | <200 ns | |
| Low Bandwidth | <600 ns | |
| Maximum Power Input: | | |
| Continuous Power | 200 mW (+23 dBm) | |
| Peak Power | 1 W (+30 dBm) for 1 µs | |
| Shaping Error | ±2% Pulse Mode | |
| | ±2% CW Mode, -30 to +20 dBm | |
| | ±4% CW Mode, -50 to -30 dBm | |
| Calibration Factor Uncertainty: | | |
| | Worst Case (%) | RSS (%) |
| to 1.0 GHz | ±3.0 | ±1.6 |
| to 2.0 GHz | ±3.6 | ±2.2 |
| to 4.0 GHz | ±3.8 | ±2.3 |
| to 7.0 GHz | ±4.3 | ±2.6 |
| to 12.0 GHz | ±4.7 | ±2.9 |
| to 18.0 GHz | ±4.9 | ±3.0 |
| Input SWR (Refl. Coeff.): | | |
| 0.5 to 2 GHz | 1.15 (0.070) | |
| 2 to 6 GHz | 1.20 (0.091) | |
| 6 to 16 GHz | 1.28 (0.123) | |
| 16 to 18 GHz | 1.34 (0.145) | |
| Noise and Drift: | | |
| Pulse mode | 50 nW (100 samples) | |
| CW mode after CW Zero | 5 nW (10 samples) | |
| Connector | Type N | |

†Specifications subject to change without notice.

***Typical Risetime in High BW Mode**

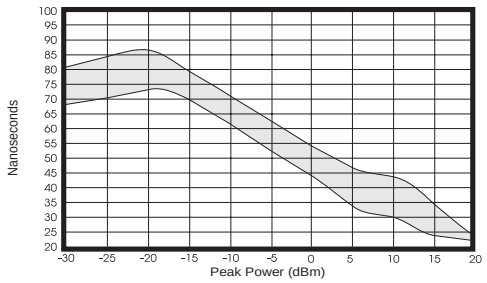


**Temperature Influence (±4° from calibration)**

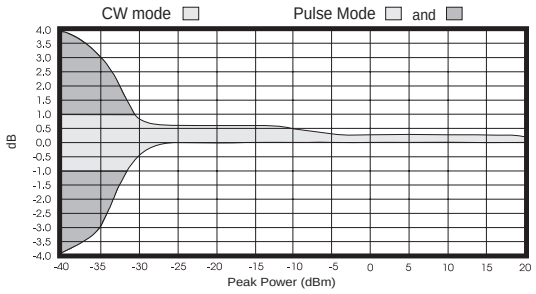

## Table D-14 Model 56518-S/1 Sensor Performance Specifications†

| Parameter | Specification | |
|---|---|---|
| Frequency Range | 0.2 to 18 GHz | |
| Risetime (10% - 90%): | | |
| High Bandwidth | <100 ns* | |
| Low Bandwidth | <300 ns | |
| Power Range: | | |
| Pulse | -40 to +20 dBm | |
| CW | -50 to +20 dBm | |
| Internal Trigger Range | -27 to +20 dBm | |
| Minimum Internal Trigger Pulse Width: | | |
| High Bandwidth | <200 ns | |
| Low Bandwidth | <600 ns | |
| Maximum Power Input: | | |
| Continuous Power | 200 mW (+23 dBm) | |
| Peak Power | 1 W (+30 dBm) for 1 µs | |
| Shaping Error | | |
| 0.2 to 0.5 GHz | ±5% Pulse Mode | |
| | ±5% CW Mode, -30 to +20 dBm | |
| | ±7% CW Mode, -50 to -30 dBm | |
| 0.5 to 18 GHz | ±2% Pulse Mode | |
| | ±2% CW Mode, -30 to +20 dBm | |
| | ±4% CW Mode, -50 to -30 dBm | |
| Calibration Factor Uncertainty: | | |
| | Worst Case (%) | RSS (%) |
| to 1.0 GHz | ±3.0 | ±1.6 |
| to 2.0 GHz | ±3.6 | ±2.2 |
| to 4.0 GHz | ±3.8 | ±2.3 |
| to 7.0 GHz | ±4.3 | ±2.6 |
| to 12.0 GHz | ±4.7 | ±2.9 |
| to 18.0 GHz | ±4.9 | ±3.0 |
| Input SWR (Refl. Coeff.): | | |
| 0.2 to 0.5 GHz | 1.25 (0.111) | |
| 0.5 to 2 GHz | 1.15 (0.070) | |
| 2 to 6 GHz | 1.20 (0.091) | |
| 6 to 16 GHz | 1.28 (0.123) | |
| 16 to 18 GHz | 1.34 (0.145) | |
| Noise and Drift: | | |
| Pulse mode | 50 nW (100 samples) | |
| CW mode after CW Zero | 5 nW (10 samples) | |
| Connector | Type N | |

†Specifications subject to change without notice.

***Typical Risetime in High BW Mode**

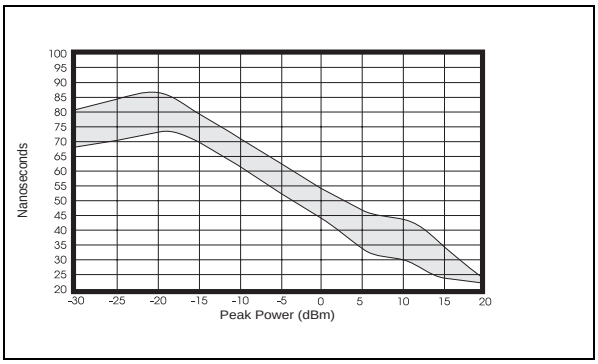


**Temperature Influence (±4° from calibration)**

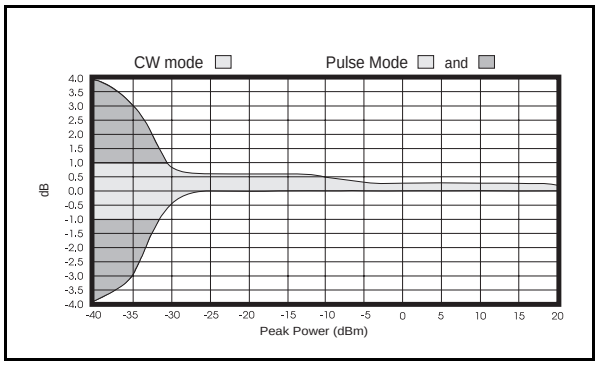

## Table D-15 Model 56518-S/2 Sensor Performance Specifications†

| Parameter | Specification | |
|---|---|---|
| Frequency Range | 0.5 to 18 GHz | |
| Risetime (10% - 90%): | | |
| High Bandwidth | <50 ns* | |
| Low Bandwidth | <150 ns | |
| Power Range: | | |
| Pulse | -40 to +20 dBm | |
| CW | -50 to +20 dBm | |
| Internal Trigger Range | -27 to +20 dBm | |
| Minimum Internal Trigger Pulse Width: | | |
| High Bandwidth | <100 ns | |
| Low Bandwidth | <300 ns | |
| Maximum Power Input: | | |
| Continuous Power | 200 mW (+23 dBm) | |
| Peak Power | 1 W (+30 dBm) for 1 µs | |
| Shaping Error | | |
| 0.5 to 18 GHz | ±2% Pulse Mode | |
| | ±2% CW Mode, -30 to +20 dBm | |
| | ±4% CW Mode, -50 to -30 dBm | |
| Calibration Factor Uncertainty: | | |
| | Worst Case (%) | RSS (%) |
| to 1.0 GHz | ±3.0 | ±1.6 |
| to 2.0 GHz | ±3.6 | ±2.2 |
| to 4.0 GHz | ±3.8 | ±2.3 |
| to 7.0 GHz | ±4.3 | ±2.6 |
| to 12.0 GHz | ±4.7 | ±2.9 |
| to 18.0 GHz | ±4.9 | ±3.0 |
| Input SWR (Refl. Coeff.): | | |
| 0.5 to 2 GHz | 1.15 (0.070) | |
| 2 to 6 GHz | 1.20 (0.091) | |
| 6 to 16 GHz | 1.28 (0.123) | |
| 16 to 18 GHz | 1.34 (0.145) | |
| Noise and Drift: | | |
| Pulse mode | 50 nW (100 samples) | |
| CW mode after CW Zero | 5 nW (10 samples) | |
| Connector | Type N | |

†Specifications subject to change without notice.

***Typical Risetime in High BW Mode**

**35 nS**

**Temperature Influence (±4° from calibration)**

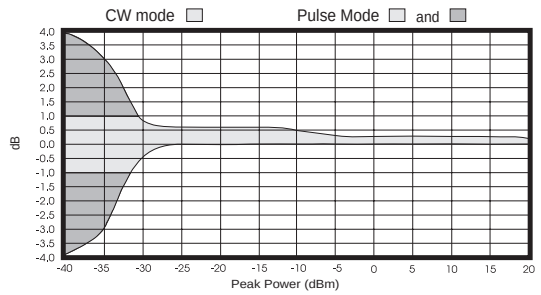

## Table D-16 Model 56526 Sensor Performance Specifications†

| Parameter | Specification |
|---|---|
| Frequency Range | 0.5 to 26.5 GHz |
| Risetime (10% - 90%): | |
| High Bandwidth | <100 ns* |
| Low Bandwidth | <300 ns |
| Power Range: | |
| Pulse | -40 to +20 dBm |
| CW | -50 to +20 dBm |
| Internal Trigger Range | -27 to +20 dBm |
| Minimum Internal Trigger Pulse | |
| High Bandwidth | <200 ns |
| Low Bandwidth | <600 ns |
| Maximum Power Input: | |
| Continuous Power | 200 mW (+23 dBm) |
| Peak Power | 1 W (+30 dBm) for 1µs |
| Shaping Error | ±2% Pulse Mode |
| | ±2% CW Mode, -30 to +20 dBm |
| | ±4% CW Mode, -50 to -30 dBm |
| Calibration Factor Uncertainty: | |

| | Worst Case (%) | RSS (%) |
|---|---|---|
| to 1.0 GHz | ±3.0 | ±1.6 |
| to 2.0 GHz | ±3.6 | ±2.2 |
| to 4.0 GHz | ±3.8 | ±2.3 |
| to 7.0 GHz | ±4.3 | ±2.6 |
| to 12.0 GHz | ±4.7 | ±2.9 |
| to 18.0 GHz | ±4.9 | ±3.0 |
| to 26.5 GHz | ±6.1 | ±4.0 |

| | |
|---|---|
| Input SWR (Refl. Coeff.): | |
| 0.5 to 2 GHz | 1.15 (0.070) |
| 2 to 4 GHz | 1.20 (0.091) |
| 4 to 18 GHz | 1.45 (0.184) |
| 18 to 26.5 GHz | 1.50 (0.200) |
| Noise and Drift: | |
| Pulse mode | 50 nW (100 samples) |
| CW mode after CW Zero | 5 nW (10 samples) |
| Connector | Type K |

†Specifications subject to change without notice.

***Typical Risetime in High BW Mode**

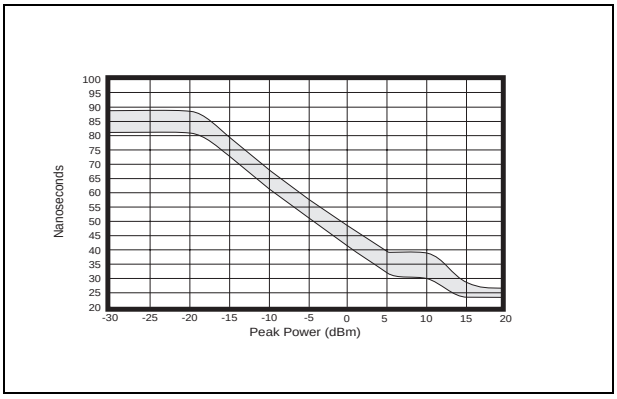


**Temperature Influence (±4° from calibration)**

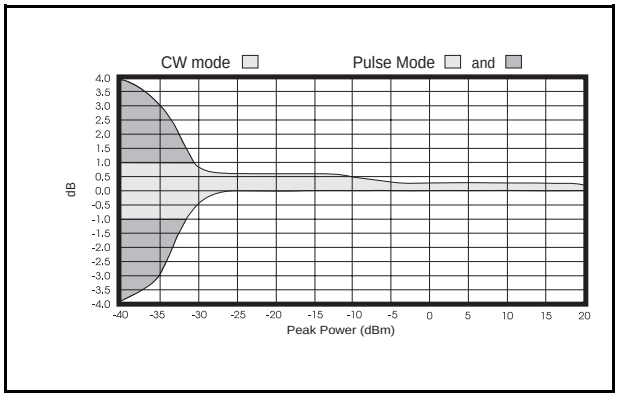

## Table D-17 Model 56540 Sensor Performance Specifications†

| Parameter | Specification | |
|---|---|---|
| Frequency Range | 0.5 to 40 GHz | |
| Risetime (10% - 90%): | | |
| High Bandwidth | <100 ns* | |
| Low Bandwidth | <300 ns | |
| Power Range: | | |
| Pulse | -40 to +20 dBm | |
| CW | -50 to +20 dBm | |
| Internal Trigger Range | -27 to +20 dBm | |
| Minimum Internal Trigger Pulse Width: | | |
| High Bandwidth | <200 ns | |
| Low Bandwidth | <600 ns | |
| Maximum Power Input: | | |
| Continuous Power | 200 mW (+23 dBm) | |
| Peak Power | 1 W (+30 dBm) for 1µs | |
| Shaping Error | ±2.4% Pulse Mode | |
| | ±2.4% CW Mode, -30 to +20 dBm | |
| | ±4% CW Mode, -50 to -30 dBm | |
| Calibration Factor Uncertainty: | | |
| | Worst Case (%) | RSS (%) |
| to 4.0 GHz | ±2.8 | ±2.0 |
| to 6.0 GHz | ±4.9 | ±3.5 |
| to 12.0 GHz | ±5.5 | ±3.8 |
| to 19.0 GHz | ±6.8 | ±4.5 |
| to 26.5 GHz | ±8.2 | ±5.5 |
| to 30.0 GHz | ±8.9 | ±6.2 |
| to 40.0 GHz | ±11.5 | ±7.7 |
| Input SWR (Refl. Coeff.): | | |
| 0.5 to 4 GHz | 1.25 (0.111) | |
| 4 to 38 GHz | 1.65 (0.245) | |
| 38 to 40 GHz | 2.00 (0.333) | |
| Noise and Drift: | | |
| Pulse mode | 50 nW (100 samples) | |
| CW mode after CW Zero | 5 nW (10 samples) | |
| Connector | Type K | |

†Specifications subject to change without notice.

***Typical Risetime in High BW Mode**

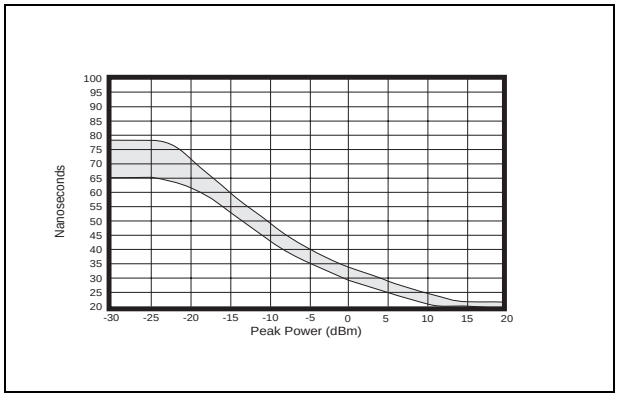


**Temperature Influence (±4° from calibration)**

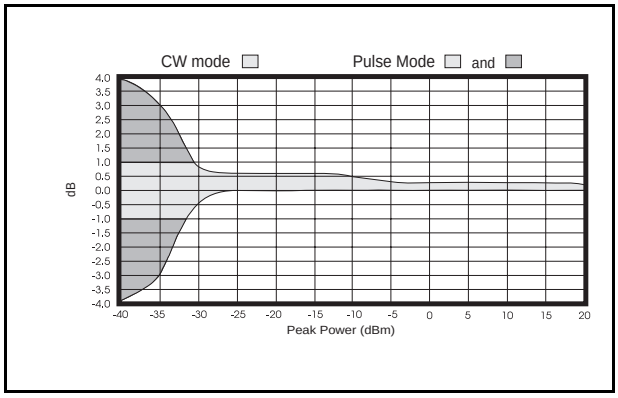

## Table D-18 Sensor Cable Length Effect on Risetime Specifications

Risetime specification for cable and input board combination which is sensor independent.

| | | | Risetime |
|---|---|---|---|
| 97102405A | Input Board with | 5 Ft. Cable | No Effect |
| 97102410A | Input Board with | 10 Ft. Cable | 15ns |
| 97102420A | Input Board with | 20 Ft. Cable | 40ns |
| 97102425A | Input Board with | 25 Ft. Cable | 50ns |
| 97102450A | Input Board with | 50 Ft. Cable | 75ns |

To calculate the new risetime specification for a sensor, input board and cable combination; the square root of the sum of the squares is used.

$$\text{Risetime} = \sqrt{(\text{Cable Risetime}^2 + \text{Sensor Risetime}^2)}$$

Example: 56318 and 20 Ft. cables

$$\text{Hi BW Risetime} = \sqrt{(40^2 + 15^2)} = 43\text{ns}$$

$$\text{Low BW Risetime} = \sqrt{(40^2 + 200^2)} = 506\text{ns}$$

| | 5Ft | 10Ft | 20Ft | 25 Ft | 50 FT |
|---|---|---|---|---|---|
| 56218 | | | | | |
| High Video BW | 150ns | 151ns | 156ns | 158ns | 168ns |
| Low Video BW | 500ns | 500ns | 502ns | 502ns | 506ns |
| 56318, 56326, 56340 | | | | | |
| High Video BW | 15ns | 21ns | 43ns | 52ns | 77ns |
| Low Video BW | 200ns | 200ns | 204ns | 206ns | 214ns |
| 56418 | | | | | |
| High Video BW | 30ns | 34ns | 50ns | 58ns | 81ns |
| Low Video BW | 100ns | 101ns | 108ns | 112ns | 125ns |
| 56518, 56526, 56540 | | | | | |
| High Video BW | 100ns | 101ns | 108ns | 112ns | 125ns |
| Low Video BW | 300ns | 300ns | 303ns | 304ns | 309ns |

# Appendix E
# End User License Agreement

IMPORTANT - READ CAREFULLY BEFORE USING THE EMBEDDED SYSTEM WHICH CONTAINS MICROSOFT SOFTWARE. By using the embedded system containing software, you indicate your acceptance of the following Software License Agreement.

This software license agreement, including the Warranty and Special Provisions set forth in this appendix, is a legal agreement between you (either an individual or an entity hereinafter "End User") and Boonton Electronics. By using the Boonton Electronics Model 4400A/4500A on which software program(s) have been preinstalled ("SOFTWARE"), you are agreeing to be bound by the terms of this agreement.

1. GRANT OF LICENSE. This License Agreement permits you to use the Microsoft SOFTWARE as preinstalled on the Boonton Electronics Model 4400A/4500A.

2. INTELLECTUAL PROPERTY. The Boonton Electronics Model 4400A/4500A contains intellectual property, i.e., software programs, that is licensed for the end user customer's use (hereinafter "End User"). This is not a sale of such intellectual property. The End User shall not copy, disassemble, reverse engineer, or decompile the software program.

3. COPYRIGHT The SOFTWARE is owned by Microsoft Corporation or its suppliers and is protected by United States copyright laws and international treaty provisions and all other applicable national laws. Therefore, you must treat the SOFTWARE like any other copyrighted material (e.g., a book or musical recording).

4. U.S. GOVERNMENT RESTRICTED RIGHTS. The SOFTWARE and documentation are provided with RESTRICTED RIGHTS. Use, duplication, or disclosure by the United States Government is subject to restrictions as set forth in subparagraph (c)(1)(ii) of The Rights in Technical Data and Computer Software clause at DFARS 252.227-7013 or subparagraphs (c)(1) and (2) of the Commercial Computer Software - Restricted Rights at 48 CFR 52.227-19, as applicable. Manufacturer is Microsoft Corporation/One Microsoft Way/Redmond, WA 98052-6399.

Please see the Warranty and Special Provisions for information concerning governing law.

**Product support for the SOFTWARE is not provided by Microsoft Corporation or its subsidiaries. For product support, or any questions concerning this agreement, please contact Boonton Electronics at the support number shown in the Boonton Electronics Model 4400A/4500A User's Manual.**

FOR THE LIMITED WARRANTY AND SPECIAL PROVISIONS PERTAINING TO YOUR COUNTRY, PLEASE REFER TO THE WARRANTY SECTION OF THE BOONTON ELECTRONICS MODEL 4400A/4500A USER'S MANUAL.

## APPENDIX
## WARRANTY AND SPECIAL PROVISIONS

LIMITED WARRANTY

LIMITED WARRANTY. Boonton Electronics warrants that (a) the SOFTWARE will perform substantially in accordance with the accompanying written materials for a period of ninety (90) days from the date of receipt. Any implied warranties on the SOFTWARE are limited to ninety (90) days. Some states/jurisdictions do not allow limitations on duration of an implied warranty, so the above limitation may not apply to you.

CUSTOMER REMEDIES. Boonton Electronics' and its suppliers' entire liability and your exclusive remedy shall be, at Boonton Electronics' option, either (a) return of the price paid, or (b) repair or replacement of the SOFTWARE that does not meet the above Limited Warranty and which is returned to Boonton Electronics with a copy of your receipt. This Limited Warranty is void of failure of the SOFTWARE has resulted from accident, abuse, or misapplication. Any replacement SOFTWARE will be warranted for the remainder of the original warranty period or thirty (30) days, whichever is longer.

**NO OTHER WARRANTIES.** THE MICROSOFT SOFTWARE PROGRAMS ARE PROVIDED TO THE END USER "AS IS" WITHOUT WARRANTY OF ANY KIND, EITHER EXPRESSED OR IMPLIED, INCLUDING, BUT NOT LIMITED TO, WARRANTIES OF NON-INFRINGEMENT, MERCHANTABILITY, AND/OR FITNESS FOR A PARTICULAR PURPOSE. THE ENTIRE RISK OF THE QUALITY AND PERFORMANCE OF THE SOFTWARE PROGRAM IS WITH YOU.

**NO LIABILITY FOR CONSEQUENTIAL DAMAGES.** BOONTON ELECTRONICS' SUPPLIERS SHALL NOT BE HELD TO ANY LIABILITY FOR ANY DAMAGES SUFFERED OR INCURRED BY THE END USER (INCLUDING, BUT NOT LIMITED TO, GENERAL, SPECIAL, CONSEQUENTIAL, OR INCIDENTAL DAMAGES INCLUDING DAMAGES FOR LOSS OF BUSINESS PROFITS, BUSINESS INTERRUPTION, LOSS OF BUSINESS INFORMATION AND THE LIKE), ARISING FROM OR IN CONNECTION WITH THE DELIVERY, USE OR PERFORMANCE OF THE SOFTWARE PROGRAM.

SPECIAL PROVISIONS
This Software License Agreement and Warranty are governed by the laws of the State of Washington, U.S.A.