Established 1981
Advanced Test Equipment Rentals
www.atecorp.com 800-404-ATEC (2832)

KEITHLEY

Model 224 Programmable Current Source

Instruction Manual

A GREATER MEASURE OF CONFIDENCE

WARRANTY

Keithley Instruments, Inc. warrants this product to be free from defects in material and workmanship for a period of 1 year from date of shipment.

Keithley Instruments, Inc. warrants the following items for 90 days from the date of shipment: probes, cables, rechargeable batteries, diskettes, and documentation.

During the warranty period, we will, at our option, either repair or replace any product that proves to be defective.

To exercise this warranty, write or call your local Keithley representative, or contact Keithley headquarters in Cleveland, Ohio. You will be given prompt assistance and return instructions. Send the product, transportation prepaid, to the indicated service facility. Repairs will be made and the product returned, transportation prepaid. Repaired or replaced products are warranted for the balance of the original warranty period, or at least 90 days.

LIMITATION OF WARRANTY

This warranty does not apply to defects resulting from product modification without Keithley's express written consent, or misuse of any product or part. This warranty also does not apply to fuses, software, non-rechargeable batteries, damage from battery leakage, or problems arising from normal wear or failure to follow instructions.

THIS WARRANTY IS IN LIEU OF ALL OTHER WARRANTIES, EXPRESSED OR IMPLIED, INCLUDING ANY IMPLIED WARRANTY OF MERCHANTABILITY OR FITNESS FOR A PARTICULAR USE. THE REMEDIES PROVIDED HEREIN ARE BUYER'S SOLE AND EXCLUSIVE REMEDIES.

NEITHER KEITHLEY INSTRUMENTS, INC. NOR ANY OF ITS EMPLOYEES SHALL BE LIABLE FOR ANY DIRECT, INDIRECT, SPECIAL, INCIDENTAL OR CONSEQUENTIAL DAMAGES ARISING OUT OF THE USE OF ITS INSTRUMENTS AND SOFTWARE EVEN IF KEITHLEY INSTRUMENTS, INC., HAS BEEN ADVISED IN ADVANCE OF THE POSSIBILITY OF SUCH DAMAGES. SUCH EXCLUDED DAMAGES SHALL INCLUDE, BUT ARE NOT LIMITED TO: COSTS OF REMOVAL AND INSTALLATION, LOSSES SUSTAINED AS THE RESULT OF INJURY TO ANY PERSON, OR DAMAGE TO PROPERTY.

KEITHLEY

Keithley Instruments, Inc. 28775 Aurora Road • Cleveland, Ohio 44139 • 440-248-0400 • Fax: 440-248-6168
1-888-KEITHLEY (534-8453) • www.keithley.com

Sales Offices:	BELGIUM:	Bergensesteenweg 709 • B-1600 Sint-Pieters-Leeuw • 02-363 00 40 • Fax: 02/363 00 64
	CHINA:	Yuan Chen Xin Building, Room 705 • 12 Yumin Road, Dewai, Madian • Beijing 100029 • 8610-6202-2886 • Fax: 8610-6202-2892
	FINLAND:	Tietäjäntie 2 • 02130 Espoo • Phone: 09-54 75 08 10 • Fax: 09-25 10 51 00
	FRANCE:	3, allée des Garays • 91127 Palaiseau Cédex • 01-64 53 20 20 • Fax: 01-60 11 77 26
	GERMANY:	Landsberger Strasse 65 • 82110 Germering • 089/84 93 07-40 • Fax: 089/84 93 07-34
	GREAT BRITAIN:	Unit 2 Commerce Park, Brunel Road • Theale • Berkshire RG7 4AB • 0118 929 7500 • Fax: 0118 929 7519
	INDIA:	Flat 2B, Willocrissa • 14, Rest House Crescent • Bangalore 560 001 • 91-80-509-1320/21 • Fax: 91-80-509-1322
	ITALY:	Viale San Gimignano, 38 • 20146 Milano • 02-48 39 16 01 • Fax: 02-48 30 22 74
	KOREA:	FL., URI Building • 2-14 Yangjae-Dong • Seocho-Gu, Seoul 137-130 • 82-2-574-7778 • Fax: 82-2-574-7838
	NETHERLANDS:	Postbus 559 • 4200 AN Gorinchem • 0183-635333 • Fax: 0183-630821
	SWEDEN:	c/o Regus Business Centre • Frosundaviks Allé 15, 4tr • 169 70 Solna • 08-509 04 679 • Fax: 08-655 26 10
	SWITZERLAND:	Kriesbachstrasse 4 • 8600 Dübendorf • 01-821 94 44 • Fax: 01-820 30 81
	TAIWAN:	1FL., 85 Po Ai Street • Hsinchu, Taiwan, R.O.C. • 886-3-572-9077 • Fax: 886-3-572-9031

© Copyright 2001 Keithley Instruments, Inc.
Printed in the U.S.A.

11/01

Model 224 Programmable Current Source
Instruction Manual

Keithley Instruments, Inc.
All rights reserved.
Cleveland, Ohio, U.S.A.
Fifth Printing, December 2001
Document Number: 224-901-01 Rev. E

KEITHLEY

Safety Precautions

The following safety precautions should be observed before using this product and any associated instrumentation. Although some instruments and accessories would normally be used with non-hazardous voltages, there are situations where hazardous conditions may be present.

This product is intended for use by qualified personnel who recognize shock hazards and are familiar with the safety precautions required to avoid possible injury. Read and follow all installation, operation, and maintenance information carefully before using the product. Refer to the manual for complete product specifications.

If the product is used in a manner not specified, the protection provided by the product may be impaired.

The types of product users are:

Responsible body is the individual or group responsible for the use and maintenance of equipment, for ensuring that the equipment is operated within its specifications and operating limits, and for ensuring that operators are adequately trained.

Operators use the product for its intended function. They must be trained in electrical safety procedures and proper use of the instrument. They must be protected from electric shock and contact with hazardous live circuits.

Maintenance personnel perform routine procedures on the product to keep it operating properly, for example, setting the line voltage or replacing consumable materials. Maintenance procedures are described in the manual. The procedures explicitly state if the operator may perform them. Otherwise, they should be performed only by service personnel.

Service personnel are trained to work on live circuits, and perform safe installations and repairs of products. Only properly trained service personnel may perform installation and service procedures.

Keithley products are designed for use with electrical signals that are rated Installation Category I and Installation Category II, as described in the International Electrotechnical Commission (IEC) Standard IEC 60664. Most measurement, control, and data I/O signals are Installation Category I and must not be directly connected to mains voltage or to voltage sources with high transient over-voltages. Installation Category II connections require protection for high transient over-voltages often associated with local AC mains connections. Assume all measurement, control, and data I/O connections are for connection to Category I sources unless otherwise marked or described in the Manual.

Exercise extreme caution when a shock hazard is present. Lethal voltage may be present on cable connector jacks or test fixtures. The American National Standards Institute (ANSI) states that a shock hazard exists when voltage levels greater than 30V RMS, 42.4V peak, or 60VDC are present. **A good safety practice is to expect that hazardous voltage is present in any unknown circuit before measuring.**

Operators of this product must be protected from electric shock at all times. The responsible body must ensure that operators are prevented access and/or insulated from every connection point. In some cases, connections must be exposed to potential human contact. Product operators in these circumstances must be trained to protect themselves from the risk of electric shock. If the circuit is capable of operating at or above 1000 volts, **no conductive part of the circuit may be exposed.**

Do not connect switching cards directly to unlimited power circuits. They are intended to be used with impedance limited sources. NEVER connect switching cards directly to AC mains. When connecting sources to switching cards, install protective devices to limit fault current and voltage to the card.

Before operating an instrument, make sure the line cord is connected to a properly grounded power receptacle. Inspect the connecting cables, test leads, and jumpers for possible wear, cracks, or breaks before each use.

When installing equipment where access to the main power cord is restricted, such as rack mounting, a separate main input power disconnect device must be provided, in close proximity to the equipment and within easy reach of the operator.

For maximum safety, do not touch the product, test cables, or any other instruments while power is applied to the circuit under test. ALWAYS remove power from the entire test system and discharge any capacitors before: connecting or disconnecting cables or jumpers, installing or removing switching cards, or making internal changes, such as installing or removing jumpers.

Do not touch any object that could provide a current path to the common side of the circuit under test or power line (earth) ground. Always make measurements with dry hands while standing on a dry, insulated surface capable of withstanding the voltage being measured.

The instrument and accessories must be used in accordance with its specifications and operating instructions or the safety of the equipment may be impaired.

Do not exceed the maximum signal levels of the instruments and accessories, as defined in the specifications and operating information, and as shown on the instrument or test fixture panels, or switching card.

When fuses are used in a product, replace with same type and rating for continued protection against fire hazard.

Chassis connections must only be used as shield connections for measuring circuits, NOT as safety earth ground connections.

If you are using a test fixture, keep the lid closed while power is applied to the device under test. Safe operation requires the use of a lid interlock.

If a ⏚ screw is present, connect it to safety earth ground using the wire recommended in the user documentation.

The symbol on an instrument indicates that the user should refer to the operating instructions located in the manual.

The symbol on an instrument shows that it can source or measure 1000 volts or more, including the combined effect of normal and common mode voltages. Use standard safety precautions to avoid personal contact with these voltages.

The **WARNING** heading in a manual explains dangers that might result in personal injury or death. Always read the associated information very carefully before performing the indicated procedure.

The **CAUTION** heading in a manual explains hazards that could damage the instrument. Such damage may invalidate the warranty.

Instrumentation and accessories shall not be connected to humans.

Before performing any maintenance, disconnect the line cord and all test cables.

To maintain protection from electric shock and fire, replacement components in mains circuits, including the power transformer, test leads, and input jacks, must be purchased from Keithley Instruments. Standard fuses, with applicable national safety approvals, may be used if the rating and type are the same. Other components that are not safety related may be purchased from other suppliers as long as they are equivalent to the original component. (Note that selected parts should be purchased only through Keithley Instruments to maintain accuracy and functionality of the product.) If you are unsure about the applicability of a replacement component, call a Keithley Instruments office for information.

To clean an instrument, use a damp cloth or mild, water based cleaner. Clean the exterior of the instrument only. Do not apply cleaner directly to the instrument or allow liquids to enter or spill on the instrument. Products that consist of a circuit board with no case or chassis (e.g., data acquisition board for installation into a computer) should never require cleaning if handled according to instructions. If the board becomes contaminated and operation is affected, the board should be returned to the factory for proper cleaning/servicing.

SPECIFICATIONS

RANGE	MAXIMUM OUTPUT	ACCURACY (1 YEAR) ±(%rdg + offset) 18°-28°C	STEP SIZE	TEMPERATURE COEFFICIENT ±(%rdg + offset)/°C 0°-18°C & 28°-50°C
100mA	±101.00mA	0.1 % + 50μA	50μA	0.01 % + 2μA
10mA	±19.995mA	0.05% + 10μA	5μA	0.005% + 200nA
1mA	±1.9995mA	0.05% + 1μA	500nA	0.005% + 20nA
100 μA	±199.95 μA	0.05% + 100nA	50nA	0.005% + 2nA
10 μA	±19.995 μA	0.05% + 10nA	5nA	0.005% + 200pA

OUTPUT RESISTANCE: Greater than $10^{12}\Omega$.
OUTPUT CAPACITANCE: Less than 20pF.
LINE REGULATION: Less than 0.01% for AC power line changes within specified limits.
VOLTAGE LIMIT: Bipolar, 1 to 105V in 1V programmable steps.
RESPONSE TIME: Less than 3ms to within 0.1% of programmed change.
TRANSIENT RECOVERY TIME: Less than 3ms to rated accuracy following any change in compliance voltage.

NOISE

RANGE	NOISE (p-p of range)	BANDWIDTH
100mA	100ppm	0.1Hz to 30kHz
10μA to 10mA	100ppm	0.1Hz to 100Hz

GUARD OUTPUT: Maximum Load Capacitance: 10nF.
Maximum Load Current: Absolute total (Output + Guard) not to exceed 105mA.
Accuracy: ±1mV (excluding output lead voltage drop).
INCREMENT/DECREMENT: Automatic, manual or trigger modes.
Range of Dwell Times: 50ms to 999.9s.
Accuracy of Dwell Times: ±(0.05% + 20μs).
Step Size: Selected digit on a fixed range. Minimum step size 0.1% of range.
Current Limit: Maximum is ±(Full Scale) on range selected.
OUTPUT LOAD: Output load must be non-inductive
EXTERNAL TRIGGER: TTL-compatible EXTERNAL TRIGGER INPUT and OUTPUT.
OUTPUT CONNECTIONS: Teflon® insulated triax connector (Specialty Connector #30JR121-1) for output; five way binding posts for GUARD OUTPUT COMMON and CHASSIS; BNC (chassis isolated) connectors for EXTERNAL TRIGGER INPUT and OUTPUT. All connections on rear panel.

IEEE-488 BUS INTERFACE (option 2243)

Multiline Commands: DCL, LLO, SDC, GET, GTL, UNT, UNL, SPE, SPD.
Uniline Commands: IFC, REN, EOI, SRQ, ATN.
Interface Functions: SH1, AH1, T6, TE0, L4, LE0, SR1, RL1, PP0, DC1, DT1, C0, E1.
Output Connections: Amphenol or Cinch Series 87 IEEE and printed circuit digital I/O port. All connections on rear panel.
Internal Programmable Parameters: Display Mode, Output, (Prefix Data Format), EOI, SRQ (including mask for over V-limit), Range, Terminator Character, Inputs (SOURCE, V-LIMIT, DWELL TIME), Output Status.
Digital I/O Port: A separate I/O port consisting of four input and four output lines as well as common (IEEE-488) and +5VDC. Outputs will drive one TTL load. Inputs represent one TTL load. The 224 can be programmed to generate a "SRQ" upon any change in the four bit input data. Mating connector supplied.

GENERAL

DISPLAY: 0.5" LED digits, 4½-digit signed mantissa, 1-digit signed exponent.
OVER VOLTAGE LIMIT INDICATION: "V-LIMIT" LED will blink.
SELF TEST: Digital RAM, ROM, and front panel LEDs upon power up.
WARMUP: 1 hour to rated accuracy.
POWER: 105-125 or 210-250VAC (internal switch selected), 50 or 60Hz, 60 watts maximum (80VA maximum). 90-105 or 180-210VAC operation available.
COOLING: Internal fan for forced air cooling.
ENVIRONMENTAL LIMITS: Operating: 0°-50°C; up to 35°C at 70% non-condensing relative humidity. **Storage:** -25°C to 70°C.
DIMENSIONS, WEIGHT: 127mm high × 216mm wide × 359mm deep (5-1/2" × 8-1/2" × 14-1/8"). Net weight 9 lbs. 15 oz. (4.52kg).
MAXIMUM ALLOWABLE COMMON MODE VOLTAGE (OUTPUT or OUTPUT COMMON to CHASSIS): 250V rms, DC to 60Hz.
ACCESSORIES SUPPLIED: Model 6011: Triaxial Test Lead (3 ft.)

Specifications subject to change without notice.

TABLE OF CONTENTS

Para.	Title	Page
	SECTION 1 — GENERAL INFORMATION	
1.1	Introduction	1-1
1.2	Features	1-1
1.3	Warranty Information	1-1
1.4	Manual Addenda	1-1
1.5	Safety Symbols and Terms	1-1
1.6	Unpacking and Inspection	1-1
1.7	Repacking for Shipment	1-2
1.8	Specifications	1-2
1.9	Accessories	1-2
	SECTION 2 — OPERATION	
2.1	Introduction	2-1
2.2	Preparation for Use	2-1
2.2.1	Correct Line Voltage	2-1
2.2.2	Power Up	2-1
2.2.3	Warm Up	2-1
2.3	Operating Instructions	2-1
2.3.1	Environmental Conditions	2-1
2.3.2	Front Panel Controls	2-1
2.3.3	Rear Panel Description	2-1
2.3.4	Output Connector	2-6
2.3.5	Inductive Loads	2-6
2.3.6	Response Time	2-6
2.3.7	General Operating Procedure	2-6
2.3.8	Front Panel Messages	2-7
2.3.9	Examples of Operation	2-7
2.4	Applications	2-12
2.4.1	Calibration	2-12
2.4.2	Resistivity Measurements	2-12
2.4.3	Diode Characterization	2-13
2.4.4	Low Resistance “Lindeck” Measurements	2-14
2.5	Detailed Front Panel Controls Description	2-14
2.6	Detailed Rear Panel Description	2-l 5
	SECTION 3 — PERFORMANCE VERIFICATION	
3.1	Introduction	3-1
3.2	Environmental Conditions	3-1
3.3	Recommended Test Equipment	3-1
3.4	Initial Conditions	3-1
3.5	Performance Verification Procedure	3-1
3.5.1	100mA to 1mA Range Verification	3-1
3.5.2	100µA and 10µA Range Verification	3-2
	SECTION 4 — THEORY OF OPERATION	
4.1	Introduction	4-1
4.2	Block Diagrams	4-1
4.3	Power Supply	4-1
4.4	Analog Board	4-1
4.5	Digital Board (Microcomputer).	4-2

TABLE OF CONTENTS CONT.

Para.	Title	Page
	SECTION 5—MAINTENANCE	
5.1	Introduction	5-1
5.2	Fuse Replacement	5-1
5.3	Line Voltage Selection	5-1
5.4	Disassembly	5-2
5.5	Fan Filter Maintenance	5-2
5.6	Special Handling of Static Sensitive Devices	5-2
5.7	Calibration	5-4
5.7.1	Recommended Test Equipment	5-4
5.7.2	Environmental Conditions	5-4
5.7.3	Warm Up	5-4
5.7.4	Calibration Adjustments	5-4
5.8	Troubleshooting	5-5
5.8.1	Digital Self Test	5-5
	SECTION 6—REPLACEABLE PARTS	
6.1	Introduction	6-1
6.2	Parts List	6-1
6.3	Ordering Information	6-1
6.4	Factory Service	6-1
6.5	Schematic Diagrams and Component Location Drawings	6-1

LIST OF ILLUSTRATIONS

Figure	Title	Page
2-1	Model 224 Front and Rear Panels	2-5
2-2	Output Connector	2-6
2-3	Limiting Inductive Reaction Voltage	2-6
2-4	Response Time	2-6
2-5	External Input and Output Trigger Pulse Specifications	2-10
2-6	External Trigger Connections	2-11
2-7	Unguarded Circuit	2-11
2-8	Guarded Circuit	2-11
2-9	Connections as a Current Sink with a Resistive Load	2-12
2-10	Model 224 Recommended Operating Limits	2-12
2-11	Resistivity Measurement Using the Model 224	2-13
2-12	Diode Characterization	2-13
2-13	Diode Curves	2-13
2-14	Low Resistance Measurement Connections	2-14
3-1	100mA to 1mA Range Verification	3-2
4-1	Analog Circuitry Block Diagram	4-3
4-2	Digital Circuitry Block Diagram	4-4
4-3	Memory Map	4-5
5-1	Model 224 Exploded View	5-3
5-2	Calibration Configuration	5-5
5-3	Memory Chip Number Assignment	5-6
6-1	Fan Assembly	6-2
6-2	Display Board, Component Location Drawing, Dwg. No. 220-110	6-11
6-3	Mother Board, Component Location Drawing, Dwg. No. 220-100	6-13
6-4	Analog Board, Component Location Drawing, Dwg. No. 224-120	6-17
6-5	Display Board, Schematic Diagram, Dwg. No. 220-116	6-21
6-6	Mother Board, Schematic Diagram, Dwg. No. 220-106	6-23
6-7	Analog Board, Schematic Diagram, Dwg. No. 224-126	6-27

LIST OF TABLES

Table	Title	Page
2-1	Line Voltage Setting	2-1
2-2	Power Up Default Conditions	2-2
2-3	Front Panel Controls	2-3
2-4	Rear Panel Description	2-4
2-5	Front Panel Messages	2-8
3-1	Recommended Test Equipment	3-1
3-2	100mA to 1mA Verification	3-1
5-1	Fuse Replacement, 3AG Size	5-1
5-2	Fuse Replacement, 5mm Size	5-1
5-3	Line Voltage Selection	5-1
5-4	Model 224 Static Sensitive Devices	5-4
5-5	Recommended Test Equipment	5-4
5-6	Model 224 Calibration	5-5
5-7	Power Supply Checks	5-6
5-8	Analog Board Checks	5-7
5-9	Digital Circuitry Checks	5-8
5-10	Display Board Checks	5-8
6-1	Index of Model 224 Schematics and Component Layouts	6-1
6-2	Mother Board, Parts List	6-3
6-3	Display Board, Parts List	6-5
6-4	Analog Board, Parts List	6-7

SECTION 1
GENERAL INFORMATION

1.1 INTRODUCTION

The Model 224 is a programmable current source with full range current output of 20μA to 101mA. The smallest step of output current is 5nA. The Model 224 has a selectable voltage compliance of up to 105V in 1V increments. The value of output current can be modified in two ways: manually or automatically. The automatically modified current value is incremented or decremented by the programmed rate. The time button allows the modification of the programmed auto increment/decrement rate. The control of the current value modification can be activated by an external trigger pulse applied to the EXTERNAL TRIGGER INPUT. At the completion of the current value modification (each digit) the Model 224 outputs a pulse that has the specifications shown in Figure 2-5. This pulse can be used to trigger another instrument (printer, DMM, controller, etc.) to start its programmed task.

With the Model 2243 IEEE-488 interface option installed, the Model 224 can be used with any measurement system that uses the IEEE-488 bus. For detailed operating instructions of the Model 2243 IEEE-488 interface option, refer to the Model 2243 Instruction Manual

1.2 FEATURES

The Model 224 has several convenient and easy to use features some of which are listed below.

- Selectable voltage compliance allows the user to select the required voltage compliance.
- 4½ digit display with appropriate exponent and decimal point.
- The output current value can be modified either manually or automatically.
- OPERATE button that places the display value of current at the output connector on the rear panel. When not in operate the Model 224's output is set at 0.000-6A while the display remains the same.
- Data keys that allow the entry of numerical data onto the display.
- External trigger input that when activated by the appropriate signal instructs the Model 224 to increment or decrement the displayed value of output current.
- External trigger output places an output pulse at the external trigger output connector upon completion of the increment or decrement of the displayed current value.
- Guard terminal that allows guarded applications to be completed.
- Selectable auto rate (TIME) of 50msec to 999.9sec.
- CANCEL button that momentarily blanks the display and terminates the data modifying operation.
- I-LIMIT function that limits the output current between the user programmed HI and LO current limits.
- IEEE-488 interface option allows the Model 224 to be incorporated into any system that uses programmed control through the IEEE-488 bus.

1.3 WARRANTY INFORMATION

Warranty information is provided on the inside front cover of this manual. If there is a need to exercise the warranty, contact the Keithley representative in your area to determine the proper action to be taken. Keithley Instruments maintains complete repair and calibration facilities in the United States, United Kingdom and Europe. Information concerning the application, operation or service of your instrument should be directed to the applications engineer in your area. Refer to the inside front cover for address locations.

1.4 MANUAL ADDENDA

Improvements or changes to this manual will be explained on an addendum sheet included with this manual.

1.5 SAFETY SYMBOLS AND TERMS

Safety symbols used throughout this manual are as follows:

The symbol on the instrument denotes that the user should refer to the operating instructions.

The symbol on the instrument denotes that high voltage may be present on the output terminals.

The **WARNING** used in this manual explains dangers that could result in personal injury or death.

The **CAUTION** used in this manual explains hazards that could damage the instrument.

1.6 UNPACKING AND INSPECTION

The Model 224 is inspected both mechanically and electrically before shipment. Upon receiving the Model 224 unpack all items from the shipping container and check for any obvious signs of damage that may have occurred during transit. Report any damage to the shipping agent. Retain and use the original packaging materials if reshipment is necessary. The following items are shipped with all Model 224 orders:

Model 224 Programmable Current Source
Model 224 Instruction Manual
Model 6011 Triaxial Test Lead Set
Optional accessories as ordered.

If an additional instruction manual is required, order the manual package (Keithley Part Number 224-901-00). The manual package includes an instruction manual and all pertinent addenda.

1.7 REPACKING FOR SHIPMENT

The Model 224 should be packed in its original carton. Before packing, wrap the instrument in plastic. After it is placed in the box, surround the instrument with styrofoam packaging material.

If the Model 224 is to be returned to Keithley Instruments for calibration or repair include the following:

ATTENTION REPAIR DEPARTMENT on the address label.
Warranty status of the instrument.
Completed service form.

1.8 SPECIFICATIONS

For Model 224 specifications, refer to the specifications that precede this section.

1.9 ACCESSORIES

The following accessories are available from Keithley Instruments to enhance the capabilities of the Model 224 Programmable Current Source.

Model 1019A Universal Rack Mounting Kit—The Model 1019A Universal Rack Mounting Kit can accomodate one or two Model 224's. The dimensions are 133mm × 483mm (5¼in. x 19in.).

Model 1019S is a slide type universal rack mounting kit. The kit will accomodate up to two half rack size instruments (e.g. Model 224) in a standard 5¼" X 19" rack.

Model 2243 IEEE-488 Interface—The Model 2243 is an optional IEEE-488 interface for the Model 224 Programmable Current Source. This interface adds extra versatility to the Model 224 by allowing the transmission of data and commands over IEEE-488 bus. The interface provides all the logic necessary to interface the Model 224 to the bus using standard IEEE-488-1978 protocol. Additionally, the Model 2243 incorporates a separate digital I/O port that may be used to interface the Model 224 to other digital instrumentation.

Model 6011 Triax Input Cable—The Model 6011 is a three foot (1 meter) low noise triax cable terminated with alligator clips at one end and a Teflon® insulated triax connector at the other end.

Model 6147 Triax to BNC Adapter—The Model 6147 Triax to BNC Adapter allows the Model 224 to be used with all Keithley accessories and cables that require BNC connections.

Model 6167 Guarded Adapter—The Model 6167 Guarded Adapter reduces effective cable capacity by driving the inner shield of a triaxial cable at guard potential.

Model 7008-3 IEEE-488 Cable—The Model 7008-3 is a three foot (1 meter) IEEE-488 cable. The cable has 24 stranded wire conductors and is terminated with IEEE-488 standard connectors.

Model 7008-6 IEEE-488 Cable—The Model 7008-6 is a six foot (2 meter) IEEE-488 cable. The cable has 24 stranded wire conductors and is terminated with IEEE-488 standard connectors.

Model 7010 Cable Adapter—The Model 7010 is an IEEE-488 cable adapter. The adapter extends the IEEE-488 connector by one connector width for easy access connections.

Model 7051-2—The Model 7051-2 is a BNC to BNC shielded cable that is 2 feet long. This cable is especially useful when utilizing the external input and output trigger connectors.

Model 7051-5—The Model 7051-5 is a BNC to BNC shielded cable that is 5 feet long. This cable is especially useful when utilizing the external input and output connectors.

SECTION 2
OPERATION

2.1 INTRODUCTION

This section contains operating instructions for the Model 224 Programmable Current Source. The operating instructions are divided into several categories including: preparation for use, operation, applications and detailed front and rear panel descriptions.

For simple "getting started" information refer to paragraph 2.3.7 General Operating Procedure.

For front and rear panel illustrations of the Model 224 refer to Figure 2-1.

2.2 PREPARATION FOR USE

2.2.1 Correct Line Voltage

Connect the Model 224 to a properly grounded power receptacle. Refer to Table 2-1 for the range of line voltage that the Model 224 can operate on. For fuse replacement or line voltage selection refer to Section 5 Maintenance.

WARNING

Ground the instrument through a properly earth grounded receptacle before operation. Failure to ground the instrument can result in severe personal injury or death in the event of a short circuit or malfunction.

Table 2-1. Line Voltage Setting

Input Voltage	Switch Setting	Fuse
105V-125V	115VAC	½ AMP, 250V, 3AG
210V-250V	230VAC	¼ AMP, 250V, 3AG
90V-110V*	115VAC	½ AMP, 250V, 3AG
180V-220V*	230VAC	¼ AMP, 250V, 3AG

For instruments equipped with low voltage transformer TR-187.

2.2.2 Power Up

After the Model 224 is connected to a properly grounded power source it can be powered up. When the instrument is turned on it goes through a power up sequence that is outlined as follows:

1. Immediately after turning on the Model 224 via the power switch, the display will indicate the following for several seconds.

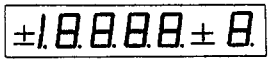

   A. This is a display test. The operator can note inoperative display segments by comparing the Model 224's display with the above figure.
   B. In addition, the pushbutton and the TALK, LISTEN and REMOTE indicators will light. All indicators will light simultaneously if operating correctly.
2. After the display test is complete the Model 224 displays the software revision level for approximately one second. The following is an example of software revision level B 2.2.

   Example: 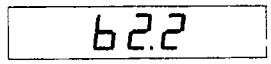
3. If the Model 2243 IEEE interface is installed, the Model 224 displays the primary address for approximately one second. The primary address of the Model 2243 is factory set at 19. If the Model 2243 is not installed in the Model 224, the power up sequence skips this step and goes on to step 4.
4. At this point the Model 224 reverts to the default conditions listed in Table 2-2.

2.2.3 Warm Up

To achieve rated accuracy the Model 224 requires one hour for warm up.

2.3 OPERATING INSTRUCTIONS

2.3.1 Environmental Conditions

Operation of the Model 224 should be at an ambient temperature within the range of 0°C to 50°C, up to 35°C at 70% noncondensing relative humidity. Environmental conditions for storage are from -25°C to 70°C.

2.3.2 Front Panel Controls

Model 224 front panel controls are listed in Table 2-3. Their operation and function are briefly described in the table. For detailed information concerning the Model 224 front panel refer to paragraph 2.5 and Figure 2-1.

2.3.3 Rear Panel Description

The rear panel of the Model 224 has several terminals and connectors. These are listed and described in Table 2-4. For detailed information concerning the rear panel refer to paragraph 2.6 and Figure 2-1.

Table 2-2. Power Up Default Conditions

Function	Default Condition
Power	On
Output	Standby (OPERATE LED off). Programmed to 0.000-6A.
Auto	Set to inactive (AUTO LED is off).
Trig	Set to inactive (TRIG LED is off).
Source	Active (SOURCE LED is on).
V-limit	Set to 3V.
I-limit	HI Limit set to 0.000. LO Limit set to 0.000.
Time	Set to 50msec (50.00-3).
Digit	Set to inactive.
INCR	Set to inactive (INCR LED is off).
DECR	Set to inactive (DECR LED is off).
Cancel	Set to inactive.
Enter	Not affected by power up.
Exponent	Not affected by power up.
Talk	Talk function is disabled (TALK LED is off).
Listen	Listen function is disabled (LISTEN LED is off).
Remote	Remote function is disabled (REMOTE LED is off).
Display	The 4½ digit display is set to

Table 2-3. Front Panel Controls

Control	Description
POWER ON/OFF	Turns the instrument on or off.
OPERATE	When activated (LED on), the Model 224 outputs the displayed value of current. When deactivated (LED off), the Model 224 is set to standby (0.000-6A is present at the output).
SOURCE	When activated (LED on), the source data function is selected and displayed. When deactivated (LED off), the source data is not displayed.
V-LIMIT	When activated (LED on), the voltage compliance is displayed. When deactivated (LED off), the voltage compliance is not displayed.
I-LIMIT	I-LIMIT button selects the window of output current limit. Default value is +.0000-0A. When activated (LED on), the current (I) limit is displayed. The HI limit is displayed first. When the I-limit button is pressed a second time the LO limit is displayed. When deactivated (LED off), the I-limit is not displayed. This function is used only in the auto mode.
TIME	When activated (LED on), the time function for the auto INCR/DECR is displayed for inspection or modification.
DIGIT	Pressing the DIGIT button selects a display digit (c segment is flashing) for alteration. Pressing the button while in the digit function selects the next digit on the right for alteration. The DIGIT button wraps the modify digit around to the most significant digit on the display if the DIGIT button is pressed when the cursor is on the next to least significant digit.
INCR	In the manual mode, each time the button is pressed the selected digit is incremented by one count. In the auto mode, the selected digit is incremented and therefore, the source value, automatically at the programmed time rate. When the programmed HI limit is reached the error message is displayed and the display remains at the HI limit. This function has the mathematical capability of carry. The least significant digit does not increment.
DECR	In the manual mode, each time the button is pressed the selected digit is decremented by one count. In the auto mode, the selected digit is decremented and therefore the source value, automatically at the programmed time rate. When the programmed LO limit is reached the error message is displayed and the display remains at the LO limit. This function has the mathematical capability. of borrow. The least significant digit does not decrement.
CANCEL	When activated, the CANCEL button momentarily blanks the display and terminates the data modifying operation.
ENTER	The ENTER button loads the displayed data into the Model 224.
EXPONENT	The EXPONENT allows entry of exponent data onto the display.
DATA	The data group of buttons allows the entry of numerical data onto the display.
AUTO	When activated (LED on), the AUTO button selects the auto function for INCR/DECR of the source data.
TRIG	When activated (LED on), an external trigger pulse via the rear panel triggers the instrument to increment or decrement the display digit. When deactivated (LED off), the trigger function is disabled.

Table 2-4. Rear Panel Description

Connections	Description
OUTPUT	The output connector is a Teflon® insulated female triax connector.
GUARD	The GUARD terminal provides a low impedance voltage source that is equal to the output compliance voltage. The GUARD terminal is useful in reducing leakage currents.
OUTPUT COMMON	The OUTPUT COMMON connector provides easy access to the inner shield of the OUTPUT connector.
CHASSIS GROUND	The chassis ground terminal provides easy access to chassis ground (earth ground).
EXTERNAL TRIGGER INPUT	This input initiates the selected display digit to increment or decrement (depending on which is enabled) upon receiving a TTL level negative transition with a minimum pulse width of 10μsec. Refer to Figure 2-5 for pulse specifications
EXTERNAL TRIGGER OUTPUT	This output provides a negative going TTL level pulse of greater than 10μsec when the selected digit has been incremented or decremented. Refer to Figure 2-5 for pulse specifications.
FUSE	This is the line power fuse and it is rated as listed in Table 5-1.
LINE RECEPTACLE	This is the line power receptacle that mates with a three wire line cord. Refer to Table 2-1 for line power requirements.
*IEEE-488 INTERFACE	This connector provides IEEE-488 bus connection to the Model 224. The connector mates with the Model 7008-3 and 7008-6 IEEE cables.
*ADDRESS	The address switches are used to set the primary address of the Model 2243 IEEE-488 interface. Factory set value is 19(10011).
*DIGITAL I/O	The digital I/O port consists of four input and four output lines as well as IEEE-488 common and +5VDC. The outputs will drive one TTL load. The instrument can be programmed to generate an SRQ upon any change in the four bit input data.

*These connectors are present only when the Model 2243 is installed in the Model 224. For more information concerning these connectors refer to the Model 2243 Instruction Manual.

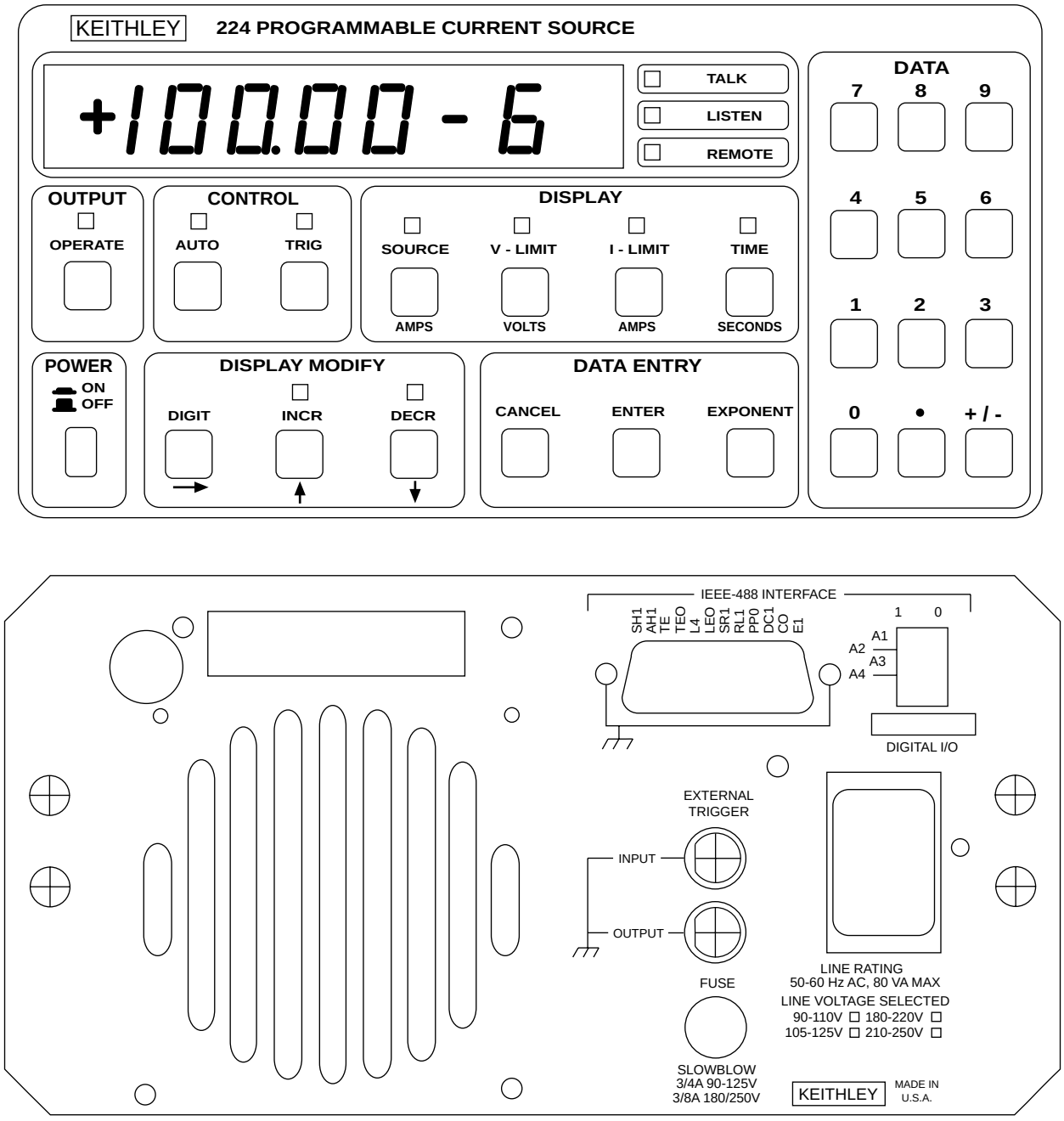

Figure 2-1. Model 224 Front and Rear Panels

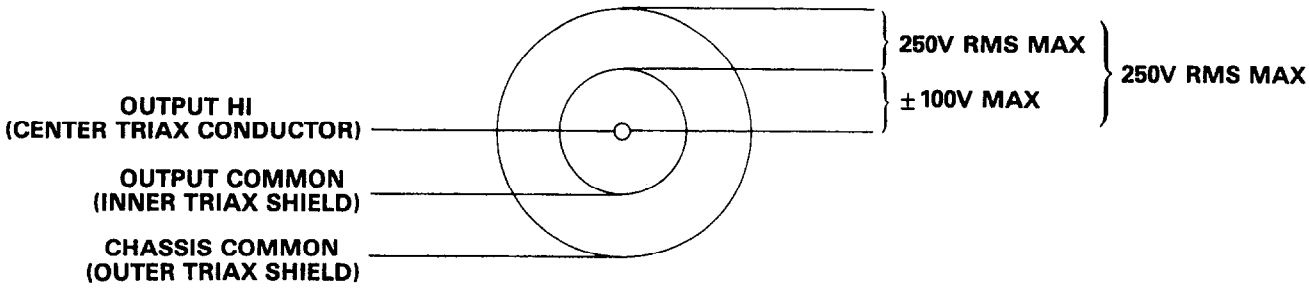

Figure 2-2. Output Connector

2.3.4 Output Connector

The output connector is a Teflon® insulated triax connector that is located on the rear panel. The maximum allowable voltage potential between the HI and LO terminals is ± 100V. The maximum allowable common mode voltage between the HI input terminal and the chassis common is 250Vrms DC to 60Hz. Refer to Figure 2-2.

2.3.5 Inductive Loads

In general, the output load connected to the Model 224 should be resistive. However, a small amount of inductance can be tolerated if the inductive reaction voltage is limited to less than 105V. Refer to Figure 2-3 for a suggested method for limiting the inductive reaction voltage.

CAUTION

If the output load connected to the Model 224 is inductive, the inductive reaction voltage MUST BE LIMITED to less than 105V. Otherwise instrument damage may occur.

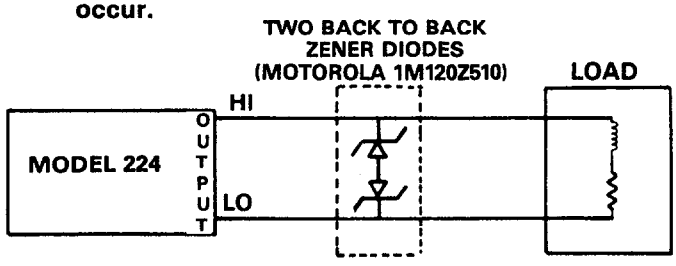

Figure 2-3. Limiting Inductive Reaction Voltage

2.3.6 Response Time

The response time is defined as the finite time difference between the actuation of the OUTPUT function and the output reaching to within 0.1% of the programmed value. The actuation of the OUTPUT function could be from an external trigger pulse or by pressing the OPERATE button on the front panel. The actual time difference is small, but in some applications it may be helpful to know the response time. The response time is depicted in Figure 2-4.

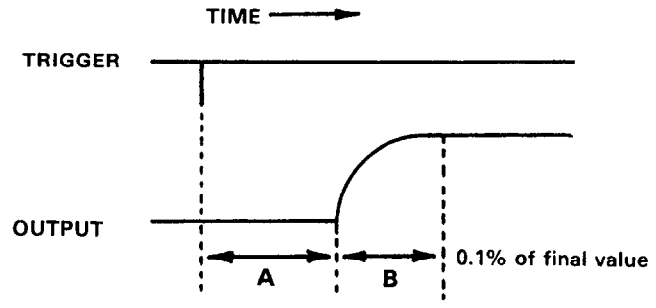

Trigger Mode	"A"	"B"	TOTAL
"X"	5.0mS	1.0mS	6.0mS
EXTERNAL TRIGGER INPUT	1.0mS	1.0mS	2.0mS

Figure 2-4. Response Time

2.3.7 General Operating Procedure

The Model 224 has several different operating parameters. These parameters (V-LIMIT, I-LIMIT, source value, time, etc) are to be programmed into the Model 224 before actual operation. The general procedure is designed to get the unfamiliar user familiar with the basic operation of the Model 224. Several programming examples follow the general procedure. These programming examples show several various ways to operate the Model 224.

1. Turn on the Model 224. Allow one hour warm up to achieve rated accuracy.
2. Select the desired I-limits. HI and LO I-limits must be set on the same range. (HI and LO are .0000-0 at power up.)
   A. Press I-LIMIT.
   B. Press the numbers that correspond to the desired HI limit. Maximum is 101.00-3A.
   C. Press ENTER.
   D. Press I-LIMIT.
   E. Press the numbers that correspond to the desired LO limit. Minimum is -101.00-3A.
   F. Press ENTER.
3. Select the desired V-limit.
   A. Press V-LIMIT.

B. Press the numbers that correspond to the desired V-limit (Default is 3V.)
C. Press ENTER.

4. Select the desired source value. (Default is 0.000-6A.) There are two ways to select the source value: auto and manual.

   Manual Selection:

   A. Press SOURCE.
   B. Press the numbers (DATA keys) that correspond to the desired source value. The source value ranges are from -101.00-3A to 0.000-6A to + 101.00-3A.
   C. Press ENTER.

   Auto Selection:

   A. Press TIME. (Selects the output range mode. Default is 50msec.)
   B. Press the numbers that correspond to the desired increment/decrement rate. The rate ranges from 50.00-3sec to 999.9sec.
   C. Press ENTER.
   D. Press SOURCE.
   E. Press DIGIT the desired amount of times to select the digit that is to be modified. The DIGIT button reverts the modify digit to the most significant digit if the DIGIT button is pressed when the cursor is presently on the digit just before the least significant digit. The least significant digit does not increment or decrement.
   F. Press AUTO.
   G. Press the INCR button to increment the displayed value. Press DECR button to decrement the displayed value.

NOTE

The INCR function has the mathematical carry capability. The DECR function has the mathematical borrow capability. The least significant digit and the exponent digit do not increment or decrement. Use manual selection to modify these digits.

   H. Press AUTO to stop the display at the desired value.

5. Connect the appropriate load.
6. Press OPERATE to output the displayed value. The output is programmed to 0.000-6A when not in the operate mode and the display remains the same.

NOTE

The output load must be noninductive. A small amount of inductance in the load can be tolerated if the inductive reaction voltage ($L \frac{di}{dt}$) is limited to less than 105V. Refer to paragraph 2.3.5.

2.3.8 Front Panel Messages

The Model 224 has several front panel messages. These messages appear throughout the operation of the Model 224 and are listed in Table 2-5.

2.3.9 Examples of Operation

The following examples present several operating methods and variations.

Example 1 Output 10mA: In this example the Model 224 will be programmed to output a source value of 10mA with a compliance voltage of 10V.

Required Output: 10mA with 10V compliance.

Use the following procedure to program the Model 224 to output the preceding parameters.

1. Turn on the Model 224. Allow one hour for warm up.
2. Press SOURCE,1,0,EXPONENT,3,ENTER. (Programs a source value of 10mA.)
3. Press V-LIMIT,1,0,ENTER. (Programs V-LIMIT of 10V).
4. Connect load.
5. Press OPERATE.

If the ENTER button is not pressed in the sequence indicated the operation will not take place as intended. Upon the actuation of step 5 the Model 224 outputs 10mA with a 10V compliance limit. Press the SOURCE button to verify that the 10mA was actually programmed into the Model 224. Press the V-LIMIT button to verify that the 10V limit was actually programmed into the Model 224.

Example 2 Output 20nA: In this example the Model 224 will be programmed to output a source value of 20nA with a compliance of 26V.

Required Output: 20nA with a 26V compliance limit.

Use the following procedure to program the Model 224 to output the preceding parameters.

1. Turn on the Model 224 and allow one hour for warm up.
2. Press SOURCE,2,0,EXPONENT,9,ENTER. (Programs a source value of 20nA.)
3. Press V-LIMIT,2,6,ENTER. (Programs a 26V compliance limit.)
4. Connect load.
5. Press OPERATE.

Example 3 Output 20nA: In this example the Model 224 will be programmed to output a source value of 20nA with a compliance voltage of 26V. This example is the same as Example 2 except for the method used to program the source value.

Required Output: 20nA with a 26V compliance limit.

Use the following procedure to program the Model 224 to output the preceding parameters.

1. Turn on the Model 224 and allow one hour for warm up.
2. Press SOURCE,0,.,0,2,EXPONENT,6,ENTER. (Programs a source value of 20nA.)

3. Press V-LIMIT,2,6,ENTER. (Programs a compliance voltage of 26V.)
4. Connect load.
5. Press OPERATE.

Upon actuation of step 5 the Model 224 outputs 20nA with a 26V compliance limit. The end result of this example is the same as the end result of Example 2. The only difference is the method used to program the source value. Press the SOURCE button to verify that 20nA was actually programmed into the Model 224. Once the SOURCE button has been activated the source value is displayed on the front panel. Press the V-LIMIT button to verify that a 26V compliance limit was actually programmed into the Model 224. Once the V-LIMIT button has been activated the V-limit is displayed on the front panel.

Table 2-5. Front Panel Messages

Message	Description
±1.8.8.8.8.±8.	Power up display segment test.
H LE	HI limit of the I-limit.
L LE	LO limit of the I-limit.
b 1.5	Example of the software revision level.
IE 19	Factory set value of the IEEE-488 interface.
Err	Error, one of the following conditions exists.
	Selecting source value that is out of the range of the Model 224. (Greater than 101.00-3A or less than -101.00-3A).
	Selecting auto time of less than 50.00-3sec or greater than 999.9sec.
	Selecting I-limit that is less than -101.00-3A or greater than 101.00-3A.
	Selecting V-limit that is less than 1V or greater than 105V.
	Selecting source value that is less than or greater than the programmed limits. (Auto mode only)
	Selected LO limit is higher than selected HI limit after auto is pressed.
	When I-limit or full scale is reached in auto mode.

Example 4 Manual INCR/DECR Operation: The value of current can be modified either manually or automatically. This example shows how to modify the current value manually.

Manual INCR/DECR Notes:

1. The DIGIT button must be pressed the desired number of times to select the digit that is to be modified.
2. The term increment means that the increasing direction is toward the positive current limit. The term decrement means that the decreasing direction is toward the negative current limit.
3. The displayed value is also the output value.
4. In this mode, the AUTO, INCR and DECR LED's are turned off.
5. The INCR function has the mathematical carry capability.
6. The DECR function has the mathematical borrow capability.
7. The least significant digit does not increment or decrement.
8. The exponent digit does not increment or decrement.
9. Only the source can be modified by INCR or DECR.

In this example we will choose the following parameters:

1. Output is 5μA.
2. Voltage compliance is 50V.

Use the following procedure to program the Model 224 to output 5μA with a voltage compliance of 50V.

1. Turn on the Model 224 and allow one hour for warm up.
2. Press V-LIMIT,5,0,ENTER. (Programs a compliance limit of 50V.)
3. Press SOURCE. (Activates the source function.)
4. Press DIGIT,DIGIT. (Selects the digit that is to be modified. Notice the C segment cursor is flashing.)
5. Press INCR,INCR,INCR,INCR,INCR,ENTER. (Modifies the selected digit to numeral 5.)
6. Connect the load.
7. Press OUTPUT. (Outputs the displayed value of current to the rear panel output connector.)

In this procedure it is easy to see how simple it is to program the Model 224 to the exact value of current desired. The example could also be used to decrement the value of current. To do this change step 5 of the procedure to:

5. Press DECR,DECR,DECR,DECR,DECR,ENTER.

This causes the display to decrement the display to 0.000-6 if it is done after the procedure was completed with the 5μA output. If this change is done before increment then the display would go in the negative direction to -5.000-6A.

Example 5 Using the Auto Mode: In this example the Model 224 will be programmed to output 33mA with a compliance limit of 100V using the auto mode. The auto mode allows adjustment of the source value to be automatically incremented or decremented at a predetermined rate.

Auto Mode Notes:

1. The time (auto increment/decrement rate) must be programmed to the desired value before using the auto mode. Power up value of time is 50.00-3sec.
2. The SOURCE button must be activated before using the auto mode.
3. The digit button cursor must be placed at the appropriate digit on the display before the auto mode is activated.
4. The furthest digit on the left of the display is either a blank or a "1".
5. Incrementing a value higher than the HI limit causes the Model 224 to display ERR, deactivate the auto mode and remain at the HI I-limit.
6. Decrementing a value lower than the LO limit causes the Model 224 to display ERR, deactivate the auto mode and remain at the LO I-limit.
7. Pressing the AUTO button while the Model 224 is auto incrementing/decrementing stops the auto increment/decrement action. Pressing AUTO again resumes the operation.
8. Decrementing a value lower or higher than the present current range causes the ERR (error) message to be displayed. The Model 224 will remain at the highest or lowest value for that range.
9. Pressing the CANCEL button while in the auto mode will abort the operation.
10. The least significant digit, or the exponent digit, does not increment or decrement.
11. To auto step the source value from the HI I-limit to LO I-limit without causing the error message to be displayed and the auto step action to be stopped the I-limits (HI and LO) must be set on the same range.
    For example:
    HI I-limit = +100E-3A on the 100E-3A range
    LO I-limit = −100E−3A on the 100E−3A range
    These values are valid and allow the scan from HI to LO or LO to HI to be completed.
    Example of inappropriate values for the auto scan:
    HI I-limit = +100E−3A on the 100E−3A range
    LO I-limit = +10E−6A on the 10E−6A range
    With these limits set, attempting to auto scan from the HI to the LO limit causes the error message to be displayed, scan operation to stop and the source value remains at 00.00E−3A. The same is true for scanning from the LO limit to the HI limit. When the source value reaches +19.00E−6A the error message is displayed, the scan operation is stopped and the source value remains at +19.00E−6A.

Required Output: 33mA with a 100V compliance limit.

The auto rate will be programmed to one second. Use the following procedure to program the Model 224 for the preceding parameters.

1. Turn on the Model 224 and allow one hour for warm up.
2. Press I-LIMIT,1,0,0,EXPONENT,3,ENTER. (Programs HI I-limit to 100mA.)
3. Press I-LIMIT,+/-,1,0,0,EXPONENT,3,ENTER. (Programs the LO I-limit to -100mA.)
4. Press V-LIMIT,1,0,0,ENTER. (Programs a voltage compliance of 100V.)
5. Press TIME,1,EXPONENT,0,ENTER. (Programs the auto rate to one second.)
6. Press SOURCE. (Selects the source function.)
7. Press DIGIT,DIGIT,DIGIT,AUTO,INCR. (Selects the third digit on the left of the display, the auto function and starts the automatic increment. When the display reaches 3.3, press AUTO to stop the auto increment function.)
8. Press CANCEL. (Deactivates the auto mode.)
9. Press EXPONENT,2,ENTER. (Programs the Model 224 for the 33mA value.)
10. Connect the Load.
11. Press OPERATE. (Outputs 33mA at the rear panel output connector.)

The auto rate may be varied from 50msec to 999.9sec. The power up default value of the auto rate is 50msec. The one second rate used in this example is used just for learning purposes. In another situation, the rate could be programmed much faster or slower. Once the desired value is reached, deactivating the AUTO button stops the auto increment/ decrement action.

The auto mode is a convenient function that allows for precise currents to be stepped. This could be used to test semiconductors at several different current values, The only difference between this example and the example of stepping the current is the actual value of current; and the OUTPUT button is activated.

The auto mode could also be used to decrement the current value. After step 11, press DIGIT,DIGIT,DIGIT,AUTO,DECR. Then observe the display decrease the value of current by 1mA every second. Stop the decrement at the 1mA level, otherwise the Model 224 will display the ERR (error) message and remain at the value of 00.00-3A. The error message is displayed because the instrument was on the 100mA range and then it was instructed to auto increment outside of that range. Refer to the Auto Mode Notes in this example.

Example 6 Triggering: The Model 224 may be triggered to increment or decrement the selected digit in two ways:

1. With the front panel TRIG button activated, apply a trigger pulse (TTL level-negative going) to the rear panel EXTERNAL TRIGGER INPUT. Refer to Figure 2-5 for pulse specifications.
2. With commands given over the IEEE bus. This action requires that the Model 2243 IEEE-488 interface option be installed.

External Trigger Notes:

1. The front panel TRIG button is used to control the rear panel EXTERNAL TRIGGER INPUT connector. Pressing this button once enables the external trigger and turns on the TRIG LED. Pressing the button again disables the external trigger operation and turns off the TRIG LED.
2. The TRIG and the AUTO functions are mutually exclusive.
3. The DIGIT button must be activated before the TRIG button is activated.
4. INCR or DECR must be selected after TRIG is activated.
5. While in the TRIG mode, pressing the TRIG button stops the operation. Pressing TRIG once more resumes the operation from where it was stopped.
6. The external trigger output is controlled by the TRIG button. When the selected digit is incremented or decremented a pulse (TTL level-negative going) appears at the EXTERNAL TRIGGER OUTPUT connector. The specifications of the pulse are shown in Figure 2-5.
7. While the auto or trig modes are activated, the four buttons in the DISPLAY group (SOURCE, V-LIMIT, I-LIMIT and TIME) are locked out.

This example covers the front panel TRIG button, the external trigger input and output connectors. The external trigger operates in conjunction with the front panel TRIG button. That is, the front panel TRIG button must be activated before the Model 224 will accept an external trigger stimulus.

To illustrate the front panel TRIG button and the external trigger input use the following procedure:

1. Connect the external trigger source to the rear panel BNC EXTERNAL TRIGGER INPUT connector.
2. Press the SOURCE button to activate the source function.
3. Press the DIGIT button to select the desired digit that is to be modified.
4. Press the front panel TRIG button to activate the trigger mode.
5. Press INCREMENT or DECREMENT.
6. To trigger the instrument, apply a pulse to the EXTERNAL TRIGGER INPUT. The pulse must conform to the specifications shown in Figure 2-5.
7. With just one pulse applied the Model 224 modifies the selected digit by one count.
8. Press OPERATE to output the current.

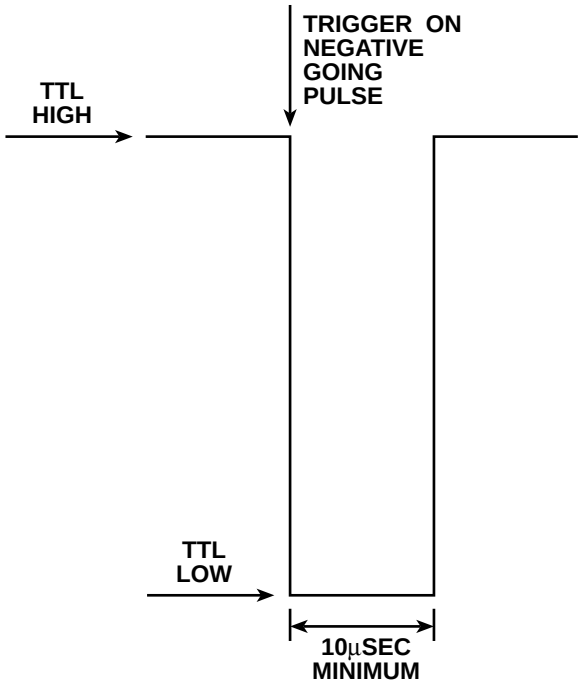

CAUTION: DO NOT EXCEED NORMAL TTL LEVELS

Figure 2-5. External Input and Output Trigger Pulse Specifications

For an example using external input and output triggering, assume the Model 224 is to be used with the Keithley Model 195A System DMM. Like the Model 224, the Model 195A has external input and output triggering. The triggering sequence would occur as follows:

The Model 195A outputs a pulse to the Model 224. This pulse triggers the Model 224 to increment or decrement the selected digit by one count. After the selected digit is modified, the Model 224 outputs a pulse to the Model 195A. With this pulse the Model 195A takes a reading. When the reading is complete the Model 195A outputs a pulse to the Model 224. Then the cycle repeats itself until it is programmed to stop or it is interrupted.

To use the Model 224 with the Model 195A perform the following steps:

1. Connect the Model 224's EXTERNAL TRIGGER INPUT connector to the Model 195A's VOLTMETER COMPLETE (trigger out) connector. Connect the Model 224's EXTERNAL TRIGGER OUTPUT to the Model 195A's EXTERNAL TRIGGER INPUT. Refer to Figure 2-6 for a block diagram.
2. Place the Model 195A in the external trigger mode.
3. Set the Model 224 I-limits.
4. Press the SOURCE button on the Model 224 to activate the source function and press OPERATE.
5. Press the DIGIT button on the Model 224 to select the appropriate digit to be modified.
6. Press the front panel TRIG button to activate the trigger mode and INCR or DECR.
7. Press RESOLN. To start the trigger action press the PRGM and TRIG button on the Model 195A in sequence to activate the one shot trigger mode of the Model 195A.
8. Observe the Model 224's display and notice that the selected digit is being modified by the Model 195A.

NOTE

The initial condition of the Model 195A may prove that it is in the one shot mode. If this is the case then pressing the PRGM and TRIG in sequence would toggle the Model 195A into an alternate trigger mode. Consult the Model 195A Instruction Manual for complete details concerning the trigger mode.

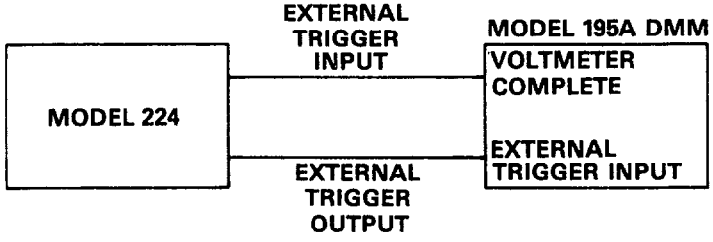

Figure 2-6. External Trigger Connections

Example 7 Using Guard: Leakage resistance between low current conductors and nearby voltage sources can cause significant error currents. For example, if a printed circuit element has a leakage path with a resistance of $10^9\Omega$ to a nearby 15V supply terminal, a current of 15nA will be generated. This is illustrated in Figure 2-7. In order to keep this current low (less than 1pA) the leakage resistance would have to be above $1.5 \times 10^{12}\Omega$. The high resistance is difficult to maintain in many situations. In order to eliminate such stringent insulation resistance requirements, guarding techniques may be used as shown in Figure 2-8.

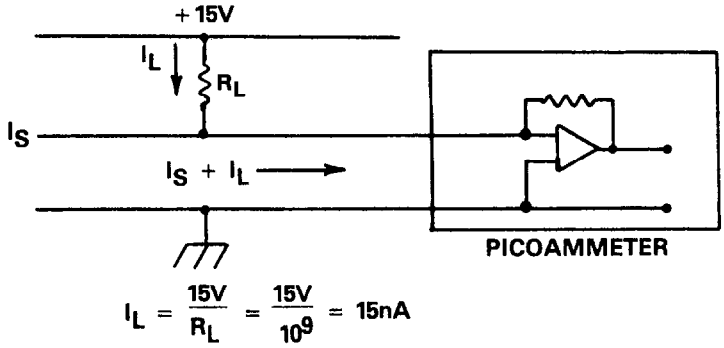

Figure 2-7. Unguarded Circuit

Guarding is defined as surrounding the sensitive input with a conductor (the guard) connected to a low impedance point which is at (virtually) the same potential. The GUARD terminal located on the rear panel provides an easy connection to a low impedance voltage source which is equivalent to the output compliance voltage.

The maximum load capacitance for the guard output is $0.01\mu F$. The maximum load current which includes guard and output is not to exceed 105mA. The accuracy of the guard ± 1mV. That is excluding the I•R drop of the output lead.

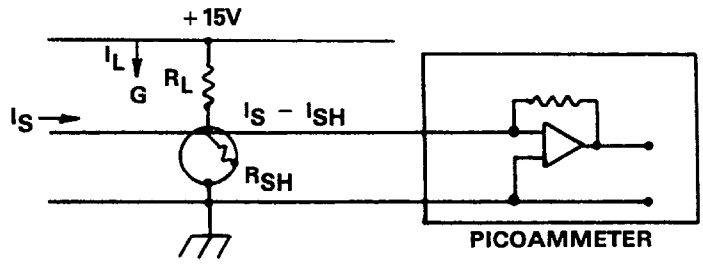

Figure 2-8. Guarded Circuit

Example 8 Operation as an ACTIVE LOAD (Current Sink): The Model 224 can be used as an active current sink. Refer to Figure 2-9 for an illustration of this concept. The output voltage V_O is a function of E, I and R_L where:

$V_o = E + IR_L$
E = Extended Voltage Source
I = Programmed Current on the Model 224
R_L = Load Resistance

CAUTION

When the Model 224 is connected so as to sink current (that is, power is delivered to the Model 224 by an external supply), care should be taken to limit the power delivered to the Model 224. Figure 2-10 shows the specifications of the power limits to the Model 224.

For resistive loads the Model 224 will deliver the programmed current up to the compliance voltage ($V_O = V_C$). The power limits must be observed, otherwise damage to the instrument may occur.

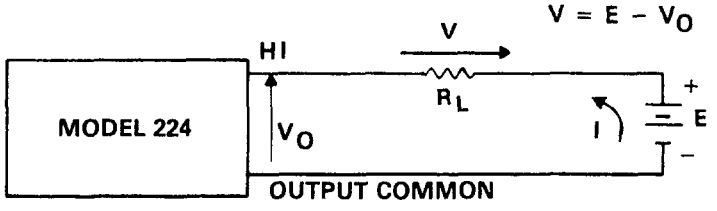

Figure 2-9. Connections as a Current Sink with a Resistive Load

2.4 APPLICATIONS

The Model 224's wide range of current values allows it to be used in a variety of applications. Some of these applications include: calibration, resistivity measurement, diode characterization and low resistance measurements, etc. The following discussions explain the preceding applications.

2.4.1 Calibration

The Model 224's high accuracy and programmability allows it to be used as an automatic calibration source for current. In many calibration situations a source of accurate and stable current is required at a controller's (computer) programmed request. With the IEEE-488 bus option the Model 224 is ideal for this type of application.

The controller may be programmed to instruct the Model 224 to output a certain value of current at a predetermined time in the calibration program. With the Model 2243 IEEE option installed and a controller connected to the interface via the IEEE bus the Model 224 can easily be programmed for this application.

If desired, the Model 224 can be manually set to output a value of current that is required for a particular application (calibration). Automatic calibration can be used when there are many instruments that require calibration. Manual output can be used where just a few instruments require calibration.

2.4.2 Resistivity Measurements

Certain semiconductor materials such as silicon have high resistivities. The measurement of their resistivity can be a difficult measurement. To aid in their measurement, special probes of a hard metal such as tungsten are used. Because contact resistance is so high, a four point probe is used. The outer contacts supply a constant current, the inner two contacts measure the voltage drop across a portion of the sample. With the geometry of the probe and wafer known, resistivity can then be calculated.

The current source must be stable and accurate. The Model 224 is suitable for this application. The accurate and stable current output required can be programmed before making the measurement.

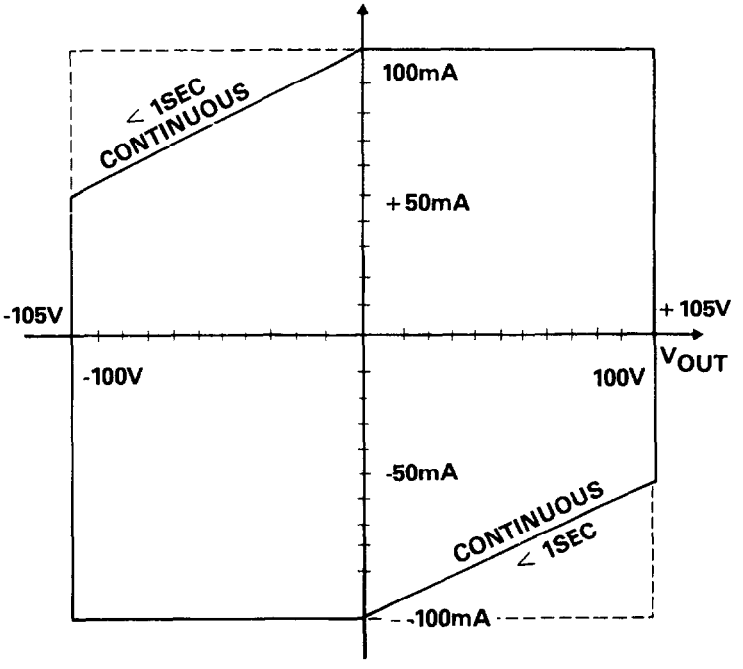

Figure 2-10. Model 224 Recommended Operating Limits

Refer to Figure 2-11 for an illustration of resistivity measurement. The two voltmeters in the circuit require a high input impedance to overcome lead resistance problems. The Keithley Model 614 has the high input impedance (greater than $5 \times 10^{13}\Omega$ in parallel with 20pF) required to make the measurement accurately. For most wafers the resistivity is calculated from

$$P = \frac{V}{ktI}$$ where:

k is a constant based on the geometry of the wafer and probe.
t is the sample thickness.
V is the measured voltage.
I is the current in the sample.

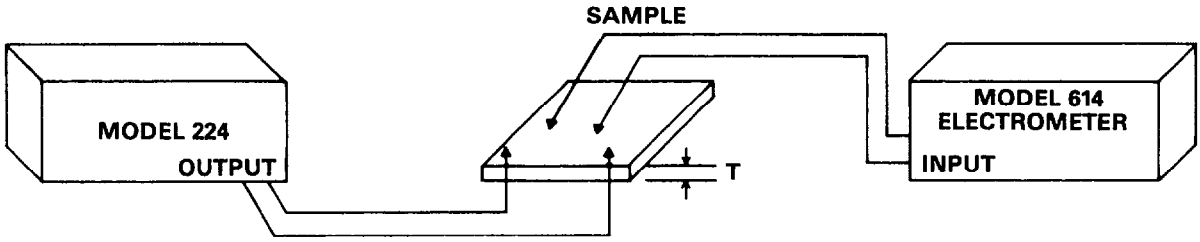

Figure 2-11. Resistivity Measurement Using the Model 224

2.4.3 Diode Characterization

With the Model 224 it is possible to obtain the necessary data to plot I-V current-voltage characteristics of a diode over several decades. Figure 2-12 shows the configuration to be used. The Model 614, with its high input resistance in the volts function, allows the measurement to be made accurately. Figure 2-13 shows several examples of diodes whose curves have been plotted using the configuration of Figure 2-12.

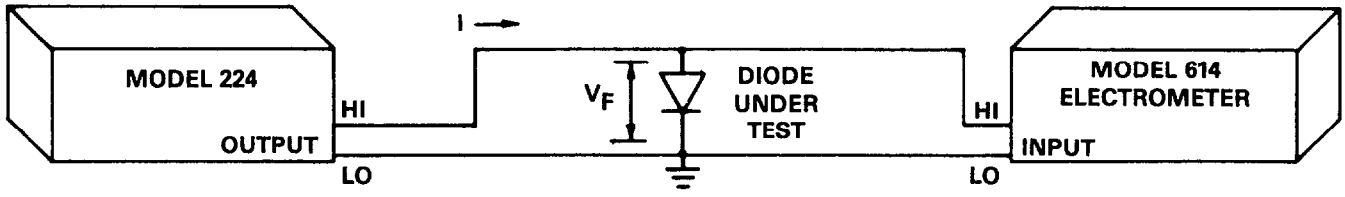

Figure 2-12. Diode Characterization

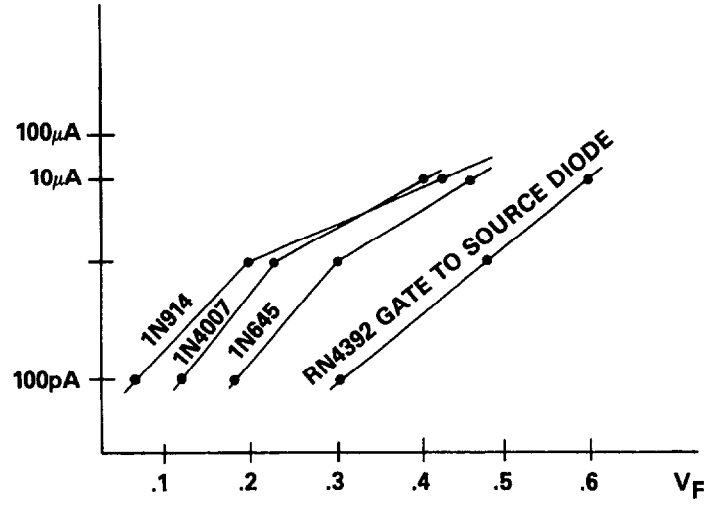

Figure 2-13. Diode Curves

2.4.4 Low Resistance "Lindeck" Measurements

The Model 224 current can be used in conjunction with the Model 181 Digital Nanovoltmeter to measure low resistance. The Model 224 is placed in parallel with the low unknown resistance. In a circuit with a 0.01Ω resistance, a current source delivering 10mA (Model 224) will provide a resolution of 0.01% with the Model 181 on the 2mV range. With this method, the resistance may be found by dividing the voltage on the Model 181 by the current source value of the Model 224. With a 10mA current source and 0.01Ω resistance, a voltage of 100μV will result across the measured resistance.

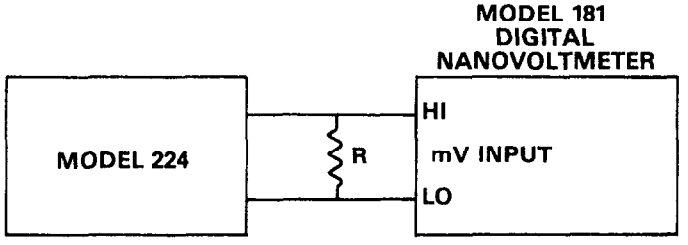

Figure 2-14. Low Resistance Measurement Connections

2.5 DETAILED FRONT PANEL CONTROLS DESCRIPTION

POWER ON OFF—The On/Off switch operates on the push-push principle. Depressing this button turns the instrument on. Once the instrument is on, pressing (releasing) this button turns the instrument off. When the Model 224 is turned on it goes through a power up sequence that is described in paragraph 2.2.2

OUTPUT—The OUTPUT button is an alternative action control which places the instrument in the displayed output mode. In the operate mode, the OPERATE LED is turned on and programmed source current is present on the rear panel output connector. When the instrument is not in the operate mode, the display value remains the same and the output is programmed to 0.000-6A, and the OPERATE LED is turned off.

V-LIMIT—The V-LIMIT button selects the voltage compliance limit for display. The compliance voltage ranges from 1V to 105V in 1V increments. The power up default value is 3V. The voltage compliance is displayed as a three digit number. The three digit number is right justified when a one or two digit number is entered and the ENTER button is pressed. Voltage compliance limiting is bipolar. The V-Limit polarity follows the SOURCE polarity. If the SOURCE current is positive, so is the V-Limit. The voltage limit accuracy for output current (I_{OUT}) on all ranges is ±3% + (1V).

I-LIMIT—The I-LIMIT button selects the window (HI-LO) of output current limit. The default value of the HI and LO current limits is .0000-0A. When the I-LIMIT button is pressed the first time the HI LIMIT message is displayed, the HI limit of the current limit is displayed and the I-LIMIT LED is turned on. At this time the HI limit may be modified by the procedure given in Example 5.

When the I-LIMIT button is pressed the second time, the LO limit message is displayed, the LO limit of the current limit is displayed and the I-LIMIT LED is turned on. At this time the LO I-limit may be modified by the procedure given in Example 5. The range of I-limit is +101.00E−3A to -101.00E−3A. Both limits must be set on the same range.

TIME—The TIME button, when activated, selects the time function of the auto mode. The time is the rate that the auto mode can increment/decrement the selected digit or current value. The default value of the time function is 50msec (50.000-3sec). The range of auto time is 50.00msec to 999.9sec.

DIGIT—The DIGIT button, when activated, selects a display digit (c segment cursor is flashing) for modification. Pressing the DIGIT button while in the DIGIT function moves the cursor to the right by one digit. If the DIGIT button is not pressed to select the digit for auto/manual incr/decr, the TRIG,AUTO,INCR,DECR will not function. The DIGIT button wraps the modify digit around to the most significant digit on the display if the DIGIT button is pressed when the cursor is on the next to the least significant digit.

INCR—In the manual mode, each time the INCR button is pressed the selected digit is incremented by one unit. In the auto mode, pressing the INCR button increments the selected digit at the programmed rate of the TIME button. This continues, unless the process is interrupted, until the HI limit is reached or overrange is reached, which ever comes first. The INCR function is operational only in the source and I-limit modes. The DIGIT button must be activated before INCR is used. The INCR function has the mathematical carry capability.

DECR—In the manual mode, each time the DECR button is pressed, the selected digit is decremented by one unit. Pressing the DECR button in the auto mode decrements the selected digit at the rate of the TIME function. This decrementing continues until the LO limit is reached, overrange is reached or the process is interrupted. The DECR function is operational only in the source and I-limit modes. The DIGIT button must be activated before DECR is used. The DECR function has the mathematical borrow capability.

CANCEL—When activated, the CANCEL button momentarily blanks the display and terminates the data modifying operation. The current display value remains as is and the output function is set to the previous value, the TRIG,AUTO, INCR and DECR functions are turned off. Pressing CANCEL when in I-limit mode switches display mode to source. Pressing CANCEL when in V-limit or time does not switch to source display mode.

ENTER—The ENTER button loads the displayed data into the Model 224.

EXPONENT—The EXPONENT button allows entry of exponent data onto the display.

DATA—The DATA group of buttons allow the entry of numerical data on the display.

AUTO—When activated (LED on), the auto button selects the auto function for incr/decr of the source data. Refer to Example 5 for auto mode notes.

TRIG—The TRIG button selects the trigger function for external trigger input via the rear panel connector. When activated (LED on), an external trigger input pulse of the specifications shown in Figure 2-5, triggers the Model 224 to increment or decrement the displayed source value. When deactivated, (LED off), the trigger function is disabled.

2.6 DETAILED REAR PANEL DESCRIPTION

OUTPUT—The OUTPUT connector is a Teflon ® insulated female triax connector.

GUARD—The GUARD terminal provides a low impedance voltage source that is equal to the output compliance voltage. The GUARD terminal is useful in reducing leakage currents for critical applications. Refer to Example 7.

OUTPUT COMMON—The OUTPUT COMMON terminal provides easy access to the inner shield of the output connector. The inner shield of the output connector is output LO.

CHASSIS GROUND—The CHASSIS GROUND terminal provides easy access to chassis ground (earth ground).

CAUTION

Do not float the instrument above 250Vrms. Instrument damage may occur. Refer to the specifications preceding Section 1.

EXTERNAL TRIGGER INPUT—The EXTERNAL TRIGGER INPUT connector accepts an input trigger pulse that has the specifications shown in Figure 2-5. Depending on the mode (auto/manual) the pulse triggers the instrument to increment/decrement the selected digit (source value) upon receiving the pulse. This is a female BNC connector. This connector is active only when the front panel TRIG button is activated (LED on).

EXTERNAL TRIGGER OUTPUT—The EXTERNAL TRIGGER OUTPUT connector provides an output pulse with the specifications shown in Figure 2-5. This pulse is present only when the selected digit (source value) has completed the increment or decrement action. Trigger output is independent of front panel trigger mode.

FUSE—This is the line power fuse and it is rated as listed in Table 5-1.

CAUTION

Do not install a fuse with a higher rating than specified in Table 5-1. Instrument damage may result.

LINE RECEPTACLE—The line power receptacle mates with a three wire line cord. Refer to Table 2-1 for line power requirements.

***IEEE-488 INTERFACE**—This connector provides IEEE-488 bus connection to the Model 2243. The connector mates with the Model 7008-3 and 7008-6 IEEE cables.

***ADDRESS**—The address switches are used to set the primary address of the Model 2243 IEEE-488 interface. The factory set value is 19(10011). The primary address is undated only upon power up.

***DIGITAL I/O**—The digital I/O port consists of four input and four output lines as well as IEEE common and +5VDC. The output will drive one TTL load. The instrument can be programmed to generate an SRQ upon any change in the four bit input data.

*These connectors are present only when the Model 2243 IEEE-488 option is installed in the Model 224. For more information concerning these connectors refer to the Model 2243 Instruction Manual.

SECTION 3
PERFORMANCE VERIFICATION

3.1 INTRODUCTION

Performance verification may be performed upon receipt of the instrument to ensure that no damage or misadjustment has occurred during transit. Verification may also be performed whenever there is question of the instrument's accuracy.

NOTE

For instruments that are still under warranty (less than 12 months since date of shipment), whose performance falls outside of the specifications at any point, contact your Keithley representative or the factory immediately.

3.2 ENVIRONMENTAL CONDITIONS

The performance verification procedure should take place at 18°C to 28°C and at less than 70% relative humidity, unless otherwise indicated.

3.3 RECOMMENDED TEST EQUIPMENT

Table 3-1 lists all the test equipment required for verification. If alternate equipment is used, the alternate equipment's specifications must be at least as good as the specifications listed in Table 3-1.

3.4 INITIAL CONDITIONS

The Model 224 must be turned on and allowed one hour for warm up. If the instrument has been subject to extremes of temperature, allow sufficient time for the internal temperature to reach normal operating conditions as specified in paragraph 3.2. Typically, it takes one hour to stabilize a unit that is 10°C (18°F) out of the specified temperature range.

3.5 PERFORMANCE VERIFICATION PROCEDURE

Use the following procedure to verify the accuracy of the Model 224. If the Model 224 is out of specification, proceed to Section 5 Maintenance unless the Model 224 is under warranty. In that case contact your Keithley representative or the factory.

NOTE

Verification should be performed by qualified personnel using accurate and reliable test equipment.

3.5.1 100mA to 1mA Range Verification

1. Connect the Model 224, Model 192 and the 100Ω resistor as shown in Figure 3-1.
2. Select the 20VDC range on the Model 192.
   A. Program the Model 224 to output +00.00-3A. Verify that the reading on the Model 192 does not exceed 5mV.
   B. Program the Model 224 to output +0.000-3A. Verify that the reading on the Model 192 does not exceed 1mV.
   C. Select the 2V range on the Model 192. Program the Model 224 to output .0000-3A. Verify that the reading on the Model 192 does not exceed +100μV. Select the 20V range on the Model 192.
3. Program the Model 224 for +100mA with a 20V compliance limit.
4. Press the OPERATE button on the Model 224.
5. Verify that the reading on the Model 192 is within the limits specified in Table 3-2.
6. Repeat steps 2 through 5 for the 10mA and 1mA ranges.
7. Repeat steps 2 through 6 with negative output current.

Table 3-2. 100mA to 1mA Verification

Range	Model 224 Output	Model 192 Allowable Reading at 18°C to 28°C
100mA	100.00mA	10.0160 to 9.9840*
10mA	10.000mA	1 to .9
1mA	1.0000mA	.10160 to .09840**

*Model 192 20VDC Range
**Model 192 2VDC Range

Table 3-1. Recommended Test Equipment

Description	Specification	Mfr.	Model
DMM	0.005% (2V range)	Keithley	192
Precision Resistor	10Ω ±0.01% 1W	Keithley	R-196-10Ω
Precision Resistor	100kΩ ±0.01%	Caddock	TF020N

3.5.2 100µA and 10µA Range Verification

1. Replace the 100Ω resistor in Figure 3-1 with the 100kΩ resistor specified in Table 3-1.
2. Select the 20VDC range on the Model 192.
   A. Program the Model 224 to output +00.00-6A. Verify that the reading on the Model 192 does not exceed +10mV.
   B. Program the Model 224 to output +0.000-6A. Verify that the reading on the Model 192 does not exceed +1mV.
3. Program the Model 224 to output +100.00-6A with a 20V compliance limit.
4. Verify the reading on the Model 192 to be between 10.016 and 9.984V.
5. Program the Model 224 to standby (press OPERATE).
6. Select the 2VDC range on the Model 192.
7. Program the Model 224 to output +10.00-6A with a 20V compliance limit.
8. Verify the reading on the Model 192 to be between +1.0016 to 0.9984V.
9. Repeat steps 2 through 8 with negative output current.

The verification of the Model 224's accuracy is now complete.

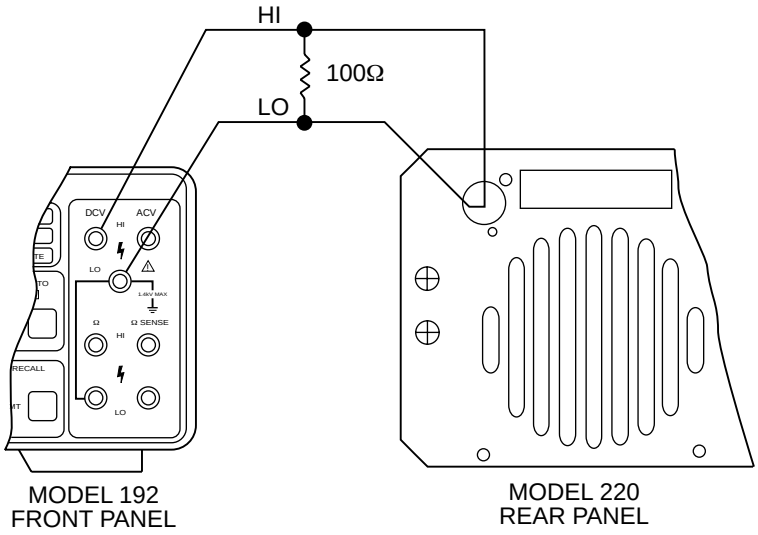

Figure 3-1. 100mA to 1mA Range Verification

SECTION 4
THEORY OF OPERATION

4.1 INTRODUCTION

This section contains circuit descriptions of the Model 224. The information is arranged to provide a circuit description of individual functional circuit blocks. To facilitate understanding the descriptions are keyed to accompany simplified block diagrams and schematics. Detailed schematics of the Model 224 are located in Section 6.

4.2 BLOCK DIAGRAMS

The circuitry of the Model 224 is represented by the two simplified block diagrams in Figures 4-1 and 4-2. Figure 4-1 shows a simplified block diagram of the Model 224's analog circuitry (power supply, range circuitry, amplifiers etc.). Figure 4-2 shows a simplified block diagram of the Model 224's digital circuitry (microprocessor, RAM, ROM, VIA etc.).

4.3 POWER SUPPLY

To facilitate understanding of the following discussion refer to schematic diagram 220-106 (sheet 2 of 2). The power supply is a conventional AC to DC power converter. Transformer T101, has three separate secondaries that are fed into three separate bridge rectifiers CR101, CR108 and the bridge configuration of CR102 through CR105. The output of CR101 is fed into the regulator VR101 and is filtered by C107 and C103 producing the +5V digital supply. The output of CR108 is fed into VR102 and VR103 and is filtered by C119 through C122 to produce the positive and negative 15V supplies. The output of CR102 through CR105 is filtered by C117 and C118 to produce the positive and negative 125V supplies. R118 and R119 are bleeder resistors to prevent charge retention after the AC power is removed.

A tap off of the primary of the transformer T101, supplies the nominal 115VAC to the ventilation fan.

4.4 ANALOG BOARD

To faciliate understanding of the following discussion refer to schematic diagram number 224-126.

The heart of the analog board is the high voltage op amp which is centered around U319. The performance of U319 is bootstrapped up to the voltage levels supplying Q318 and Q319 by Q315-Q319, Q313-Q318 and their associated circuitry. Q310, Q302, R344, R348, R349, C313 and C320 establish frequency stability for U319. R343 is an input voltage offset adjustment for U319.

A constant current source can be derived by a series voltage source and resistance from the output (analog/common/guard) to the amplifier input. The amplifier input to the common of the high voltage supplies of Q318/Q319 (output common) comprised a current source. Range resistors (R375, R376, R377, R379, R380, R381 and R383) along with their associated calibration potentiometers make up the series resistance section of the current source. When more than one resistance is connected through one relay, JFET-switches are used to distinguish which resistor is being used. Several JFETs are organized in pairs for voltage sensing at the resistor to compensate for the voltage drop in the current carrying JFET.

U315 serves as sense amplifier with Q311, Q312, R344 and R345 as a high current buffer for the higher current ranges. U314, U318A and U320B,C,D,E and F drive the range relays. U313 and U317 are voltage comparators with open collector outputs. Combined with R350, this circuitry provides the voltage drive for the switching FETs.

The voltage source section centers around U311, the 12 bit digital-to-analog converter (DAC). Associated circuitry R301 through R307 and R316, are used to adjust offset and positive gain. Gain is set on the 1mA range and therefore does not require an adjustment. Following this circuitry is a network providing a $\pm$ operator to the output of U311. U312 provides the active portion, while switches on U306 align with resistors R317, R318, R320 and R323 to provide a selectable gain of +1 or -1.

R318 provides a gain adjust (-1mA) for this operator. The output is fed to the sense amplifier U315. R392 is an offset voltage adjustment potentiometer for U312 and U315.

Serial to parallel shift/store registers U301, U302 and U303 provide digital control from the serial data link. Data is transmitted via the clock and latch lines. Latch selects the data in mode as either recirculated data out (latch = logic 0) or the over compliance V-limit information (latch = logic 1). This selection is performed by U304A and B, U316B and C, and U305A.

Gates U305B, C and D form a flip-flop for controlling the tristate mode of the outputs of U301, U302 and U303. This circuitry, along with R351, R352, CR307, C305, etc., prevents erroneous current source outputs both on acquisition and loss of AC line power.

The remaining portion of the analog circuitry produces the selectable compliance voltage limit. An 8 bit digital-to-analog converter (DAC) U308 starts this process. With 128 combinations, each step is scaled to represent 1V of compliance. Since U308 is a current output DAC, U309 is required to

revert back to voltage level. The output of U309 then represents the selected compliance voltage scaled down by a factor of 20.

This signal and its inverse (U309A, R324 and R327) are applied to divider network R331 and R336 which are referenced to output common. At the junction of each divider network is an amplifier which reverts the previous scaling factor. Resulting from this is an error voltage approximately equal to the difference between the actual compliance voltage level and the programmed level. Each amplifier U307A and B and the associated circuitry, is coupled through diodes CR303 and CR302 on R333. The polarity of the diodes is arranged such that a voltage is impressed on R333 only when the actual voltage compliance exceeds $\pm$ the programmed value. This result is applied to the output mode via low leakage diode CR304 preventing any further voltage excursion. Current from the range resistors is shunted through diodes CR305 and CR306 when this operation occurs. Resistors R330 and R332 add an offset to compensate for diode drops in CR302 through CR304.

The circuit configuration of U313A and B comprise a window comparator to detect a V-limit condition across R333. The comparator limits are set by resistor divider network R338 through R341. U313A and B open collector outputs are configured in a "wire ORed" fashion through pull up resistor R346. When ever the voltage across R333 exceeds the comparator limits, a logical 1 is developed through current limiting resistor R347 to the output of inverter U316E. C311 is used for stabilization.

VR301 supplies the digital circuitry with the required +5V. This voltage is also supplied to the digital board for use by the optically isolated portion of the circuitry.

4.5 DIGITAL BOARD (Microcomputer)

To facilitate understanding of the following discussion refer to schematic diagram 220-106 (sheet 1 of 2). For an overall block diagram of the digital circuitry refer to Figure 4-2.

The microcomputer and its associated logic circuitry, controls front panel functions (source, time, auto, etc.), operation of the front panel display and data through the IEEE-488 interface circuitry when it is installed.

The microcomputer includes a 6808 microprocessing unit U115; a 6522 versatile interface adapter U114; two 2732 ROMs U109 and U111; four 2114 RAMs U101, U103, U105 and U107; an address decoder U110; a data bus driver U116 and the necessary reset logic. The memory utilized in this system is shown in the memory map (Figure 4-3). Using address lines A13, A14 and A15; U110 sections the 64k of memory space into 8k and 4k segments. The total memory used is a small portion of the entire addressing capabilities of the 6808 microprocessor U115. Memory location for the 64k addresses are assigned the values 0000_{16} through $FFFF_{16}$.

Interfacing of the microprocessor with the RAMs, ROMs, Front Panel, VIA or the IEEE-488 interface ciruitry is controlled by the address decoder, U110.

Partial address decoding is used in this system. The function selected is determined by the state of the address lines A13, A14 and A15. These address lines determine which output is selected at the decoder U110 in accordance with the memory map. Only one of the devices (RAM, ROM VIA etc.) will have access to the data bus at any time. The address decoder selects one of the devices only after a Valid Memory Address (VMA) has been asserted at the decoders input EN (pin 6). The VMA signal is generated by the 6808 microprocessor.

Timing for the computing sequence is provided by the 4MHz crystal Y101. The 6808 microprocessor divides this signal by four to obtain 1MHz signal at the 2 output (pin 37).

U102, U104, U106C, U108C and their associated circuitry form a reset network (watch dog) which resets the microprocessor, VIA and the IEEE-488 interface (when installed). The circuit actuates in the event the front panel display is not updated after a specific period of time has elapsed due to a lost program or power line transient.

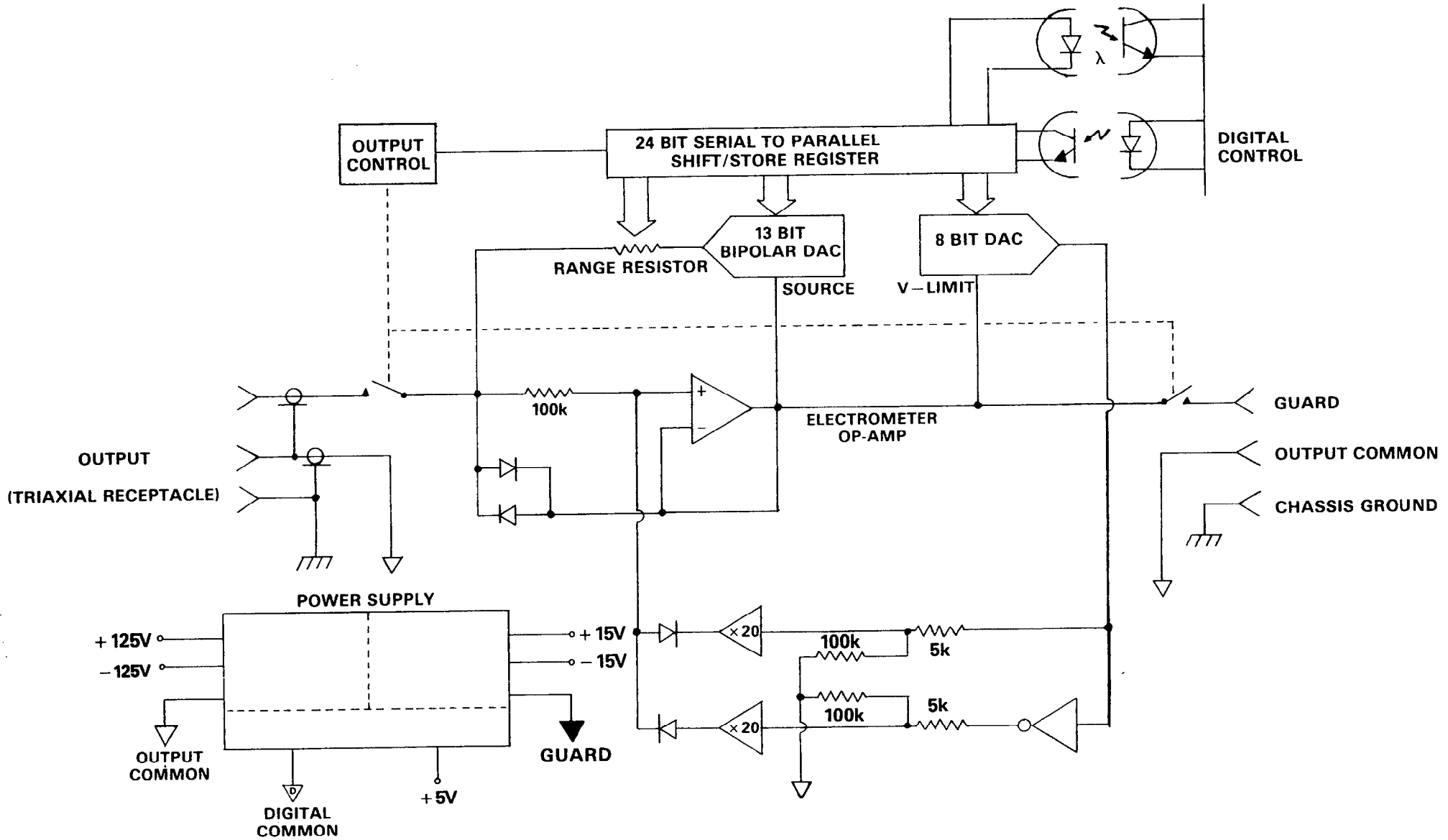

Figure 4-1. Analog Circuitry Block Diagram

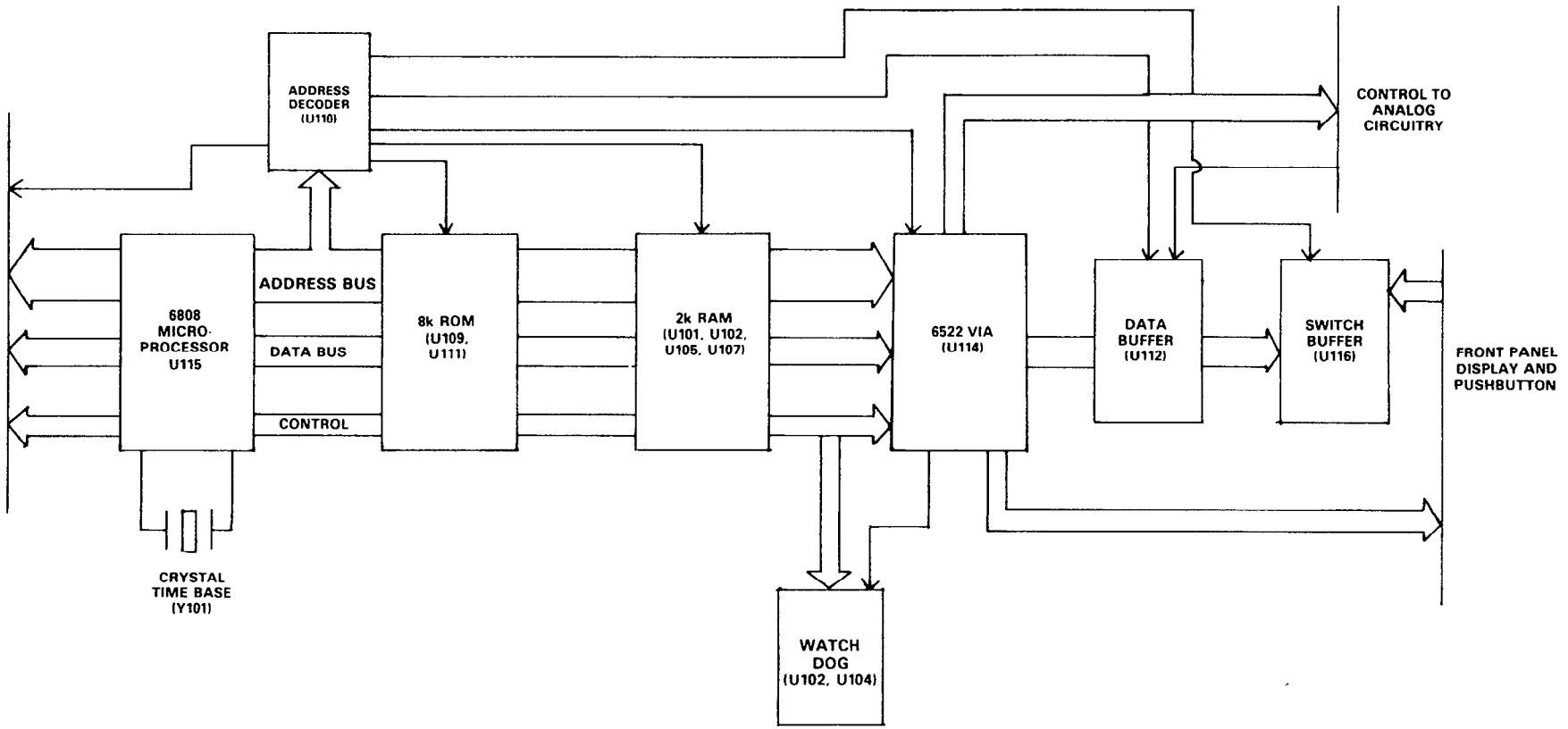

FOR DETAILED INFORMATION ON THE IEEE-488 INTERFACE REFER TO THE 224 PROGRAMMING MANUAL

Figure 4-2. Digital Circuitry Block Diagram

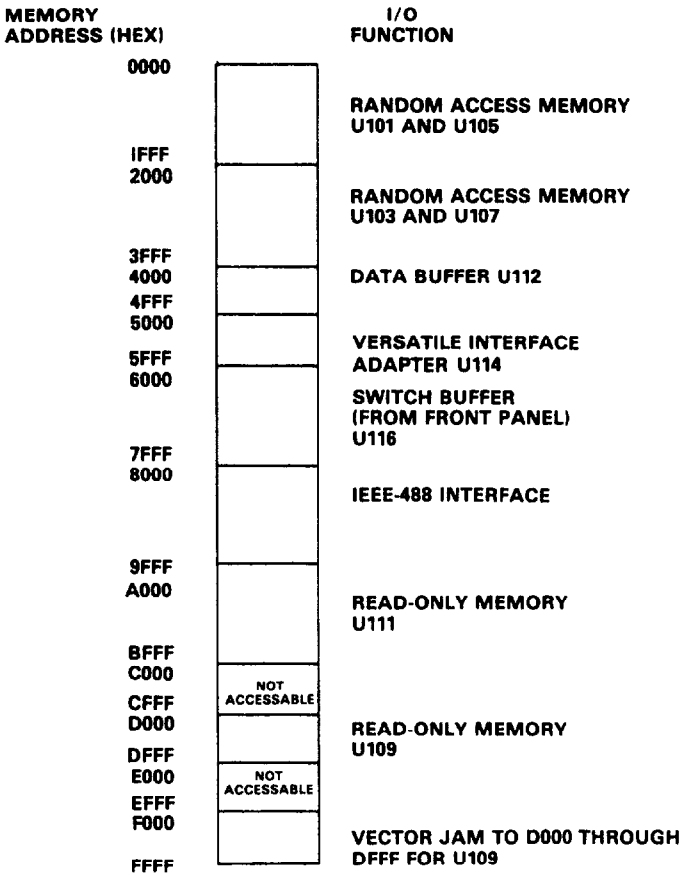

Figure 4-3. Memory Map

SECTION 5
MAINTENANCE

5.1 INTRODUCTION

This section contains information necessary to maintain the Model 224 Programmable Current Source. Calibration adjustment, troubleshooting, fuse replacement, line voltage selection, fan filter cleaning and all information pertinent to maintenance is provided.

5.2 FUSE REPLACEMENT

The Model 224 Programmable Current Source's line fuse (F101) is located on the rear panel. F101 protects the line and the instrument in case of overload. If the line setting is changed (refer to paragraph 5.3) the fuse must be replaced according to Tables 5-1 and 5-2. Use the following procedure to replace the line fuse.

WARNING
Disconnect the Model 224 from the power line and other equipment before replacing the fuse.

1. Turn the power off, remove the Model 224 from all other equipment and disconnect line cord.
2. The fuse carrier is spring loaded. Using a flat blade screwdriver, push the fuse carrier in and rotate ¼ turn counterclockwise. The carrier and fuse will eject from the instrument.
3. Remove the fuse from the carrier and replace per Table 5-1 or 5-2.

CAUTION
Do not install a fuse with a higher rating than specified in Table 5-1 or 5-2. Instrument damage may result.

4. To install the fuse and carrier into the holder, reverse the procedure in step 2.

Table 5-1. Fuse Replacement, 3AG Size

Line Voltage	Fuse F101	Keithley Part No.
90V-110V*	3/4A, 250V, 3AG, SLO BLO	FU-19
105V-125V	3/4A, 250V, 3AG, SLO BLO	FU-19
180V-220V*	3/8A, 250V, 3AG, SLO BLO	FU-18
210V-250V	3/8A, 250V, 3AG, SLO BLO	FU-18

*Requires special factory installed transformer TR-187.

Table 5-2. Fuse Replacement, 5mm Size

Line Voltage	Fuse F101	Keithley Part No.
90V-110V*	0.8A, 250V, SLO BLO	FU-52
105V-125V	0.8A, 250V, SLO BLO	FU-52
180V-220V*	0.4A, 250V, SLO BLO	FU-53
210V-250V	0.4A, 250V, SLO BLO	FU-53

*Requires special factory installed transformer TR-187.

5.3 LINE VOLTAGE SELECTION

Set up the Model 224 to operate on the available AC line voltage as follows:

WARNING
To prevent a shock hazard, always turn the *instrument off, remove all other equipment* from the Model 224 and disconnect the line cord before removing the top or bottom cover.

1. Remove the top cover. Refer to the disassembly instructions in paragraph 5.4. Refer to Figure 5-1.
2. Refer to Table 5-3 and set the switch (S102) accordingly. The switch is located near the transformer, underneath IEEE-488 option (if installed).
3. Install the proper fuse per paragraph 5.2

NOTE
The line voltage setting of the instrument is marked on the rear panel. The preceding procedure can be used to either confirm the factory setting or to set the instrument for operating on another voltage range. If the voltage range is changed, the box next to the selected line voltage should be appropriately marked as an external reminder of the setting, Use a water and petroleum resistant marking pen as described in IEC-348.

Table 5-3. Line Voltage Selection

Line Voltage	Line Frequency	Switch S102
90V-110V*	50Hz-60Hz	115V
105V-125V	50Hz-60Hz	115V
195V-235V*	50Hz-60Hz	230V
210V-250V	50Hz-60Hz	230V

*Requires special factory installed transformer TR-187.

5.4 DISASSEMBLY

If it should become necessary to disassemble the Model 224 use the following procedure. Also, refer to Figure 5-1.

1. Remove the top cover as follows:

WARNING

Turn the instrument off, disconnect all other equipment from the Model 224 and disconnect the line cord before removing the top cover.

   A. Remove the two retaining screws located at the rear of the instrument.
   B. Grasping the top cover at the rear, carefully lift it off of the instrument.
   C. When installing the top cover, make sure that the three tabs that are located at the front of the cover engage in the front panel assembly.
2. Remove the IEEE-488 interface board (Model 2243).
   A. Unplug the ribbon cable (J/P1004) at the mother board.
   B. Remove the phillips head retaining screw located near J1004 on the interface board.
   C. Remove the two retaining bolts that secure the interface board and IEEE-488 standard connector to the rear panel.
   D. Lift the interface out of the mainframe.
   E. To install the Model 2243 reverse the above procedure.
3. Remove the analog board shield.
   A. Remove the four slot head screws that secure the shield to the analog board.
   B. Lift the shield and the four slot head screws away from the analog board.
   C. Remove the two screws that secure the analog board bottom shield to the analog board.
   D. Remove the analog board bottom shield.

NOTE

The circuitry located beneath the analog board shields is extremely sensitive. Do not touch any of the range resistors or input cable.

4. Remove the analog board.
   A. Remove the phillips head screw located directly behind the two power transistors.
   B. Unplug the ribbon cable (J/P1003) from the analog board.
   C. Remove the bottom shield of the analog board by removing the two phillips head screws that secure the shield to the board.

NOTE

Do not remove the output cable.

5. Place the analog board along side of the Model 224.
6. Remove the mother board from the case.
   A. Remove the four plastic standoffs.
   B. Remove the two phillips screws that secure the mother board to the case. They are located at the rear of the mother board, one by the fan and the other is by the line voltage selector switch S102.
   C. Remove the two phillips head screws that secure the case to the rear panel.
   D. Unplug the display ribbon cable (J/P1002) from the mother board.
   E. Grasp the mother board and the rear panel simultaneously. Lift the mother board and the rear panel up and toward the rear of the instrument. Then lift the mother board and rear panel out of the case.
8. Remove the display board.
   A. Remove the two phillips head screws that secure the display board to the front panel.
   B. Remove the front panel buttons.
   C. Lift the display board out of the case.
9. For reassembly, perform steps 1-8 in reverse order.

NOTE

When installing connectors J/P1004, J/P1003 and J/P1002 be sure to align pin one of the connector to pin one of the cable.

5.5 FAN FILTER MAINTENANCE

The internal temperature generated by the Model 224 necessitates the forced air cooling provided by the fan. The fan has an air filter which keeps the instrument relatively free of dust and dirt. Dust and dirt collect on the filter and impede the air flow through the instrument. Lack of air flow will cause overheating. Therefore, the filter must be kept clean in order for the Model 224 to maintain optimum performance. To clean the filter:

1. Remove the filter from the fan.
2. Use compressed air to remove the dust and dirt from the filter. If the filter is excessively dirty wash it in mild soap and water and dry it with compressed air.
3. Reinstall the filter.

5.6 SPECIAL HANDLING OF STATIC SENSITIVE DEVICES

MOS devices are designed to function at high impedance levels. Normal static charge can destroy these devices. Table 5-4 lists all the static sensitive devices of the Model 224. Steps 1-7 provide instruction on how to avoid damaging these devices.

1. Devices should be handled and transported in protective containers, antistatic tubes or conductive foam.
2. Use a properly grounded workbench and grounding wriststrap.

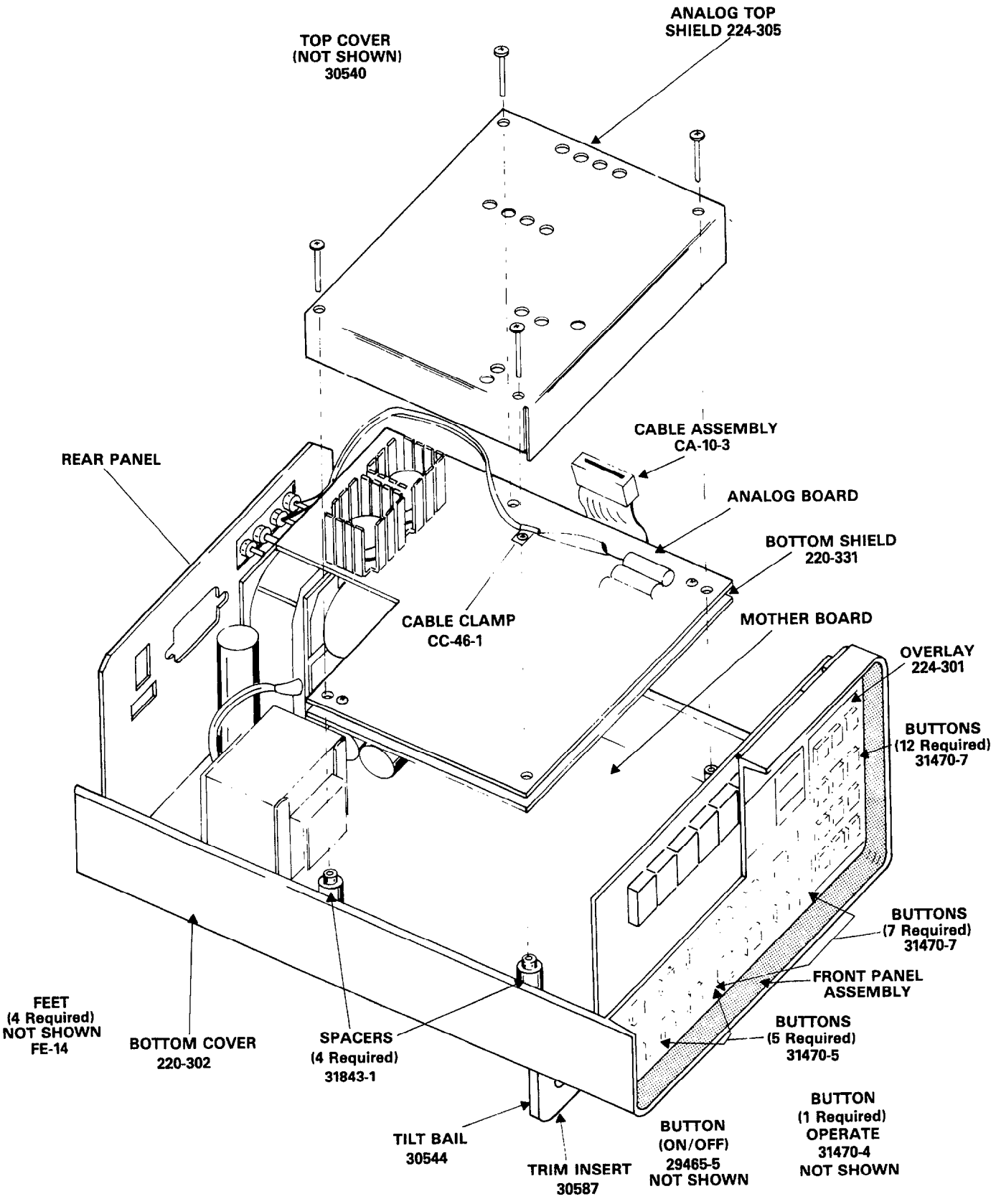

Figure 5-1. Model 224 Exploded View

Table 5-4. Model 224 Static Sensitive Devices

Reference Designation	Keithley Part No.
U101, U103, U105, U107	LSI-15
U102	IC-197
U109	224-800-**
U111	224-801-**
U112, U301, U302, U303	IC-251
U114	LSI-28
U115	LSI-27
U116	IC-250
U304	IC-138
U305, U314	IC-102
U306	IC-320
U308	IC-321
U311	IC-323
U316	IC-106
Q302	TG-139

3. Handle the devices by the body only.
4. PC boards must be grounded to the bench while inserting the devices.
5. Use antistatic solder removers.
6. Use grounded tip soldering irons.
7. After devices are soldered or inserted into sockets they are protected and normal handling can resume.

5.7 CALIBRATION

Calibration of the Model 224 should be performed yearly (every 12 months) or whenever performance verification (Section 3) indicates that the Model 224 is out of specification. If any step in the calibration procedure cannot be performed refer to paragraph 5.8 Troubleshooting or contact your Keithley representative or the factory.

WARNING

All service information is intended for qualified electronic maintenance personnel only.

5.7.1 Recommended Test Equipment

Recommended test equipment is listed in Table 5-5. Alternate test equipment may be used. However, the accuracy of the alternate test equipment must at least be equal to the specifications listed in Table 5-5.

5.7.2 Environmental Conditions

Calibration should be performed under laboratory conditions having an ambient temperature of 23°C ±1°C and a relative humidity of less than 50%.

5.7.3 Warm Up

The Model 224 must be turned on and allowed one hour for warm up. If the instrument has been subjected to extremes of temperature, allow sufficient time for internal temperatures to reach normal operating conditions. Typically, it takes one hour to stabilize a unit that is within 10°C (18°F) of the specified temperature range.

5.7.4 Calibration Adjustments

Use the following procedure and make the adjustments indicated to calibrate the Model 224. To locate adjustment points, remove the top cover and refer to the analog board shield.

WARNING

To prevent a shock hazard, turn the instrument off, remove the line cord and all test leads from the instruments before removing the top cover.

1. Remove the top cover (refer to paragraph 5.4). Warm up the instrument with the top cover in place. Minimize the time the top cover is removed.
2. Short the output of the Model 224 (HI to LO). Monitor the GUARD output with the Model 192 (Item A, Table 5-5) on the .2VDC range.

Table 5-5. Recommended Test Equipment

Item	Description	Specification	Mfr.	Model
A	DMM	±0.005% to 10μV	Keithley	192
B	Resistor*	10Ω ±0.1%	Keithley	R-185-10
C	Resistor*	100Ω ±0.1%	Keithley	R-308-10M
D	Resistor*	1kΩ ±0.1%	Keithley	R-287-1k
E	Resistor	100kΩ ±.02%	Keithley	R-182-100k
F	Oscilloscope	1MHz Bandwidth	Tektronix	465

NOTE*

Before placing the resistors in the test configuration, measure them with the Model 192 and note their value. Zero the Model 192 before measuring the resistors. These values will be used later in the calibration procedure.

3. Program the Model 224 for an output of +.0000-3A with a 10V compliance limit. Locate and adjust R343 for a reading on the Model 192 of .000000 ±2μV.
4. Remove the short from the output of the Model 224. Connect the Model 224 and the Model 192 as shown in Figure 5-2.
5. Program the Model 224 to output +.0000-3A. Monitor the Model 224 output on the Model 192.
6. Invert the Model 224 output (press ± and ENTER on the Model 224) and note the change in current.
7. Calculate the average reading when the output is changed from positive to negative and adjust R304 for the calculated value. Then adjust R392 for a reading of less than ±100nA.
8. Follow Table 5-6 to calibrate the ranges of the Model 224.

NOTE

The allowable reading on the Model 192 is the product of the measured shunt resistance times the Model 224 output. For example, in Table 5-6 step A:
Measured Shunt Resistance = 1kΩ
Model 224 Output = 1.9mA
Calculated Output = 1.9V ± 300ppm or 570V

9. When step 8 is completed the Model 224 is calibrated.

5.8 TROUBLESHOOTING

The troubleshooting information in this section is intended for use by qualified personnel who have basic understanding of the analog and digital circuitry used in a precision test instrument. Instructions have been written to assist in isolating the defective circuit. Isolating the defective component(s) has been left up to the technician or troubleshooter. Refer to Table 5-7 for power supply checks. The power supply should always be the first item on the list of any troubleshooting. Refer to Table 5-8 for analog board checks. Refer to Table 5-9 for digital circuitry checks. Refer to Table 5-10 for display board checks.

NOTE

For instruments that are still under warranty (less than 12 months since date of shipment), whose performance falls outside of specification at any point, contact your Keithley representative or the factory before attempting troubleshooting or repair.

5.8.1 Digital Self Test

Upon power up the Model 224 performs a digital self test of the RAM (2114's) chips and cyclic redundancy check (CRC) of the ROM (2732's) chips. If the self test or the CRC reveals a problem with any of the memory chips, the Model 224 will display an error message corresponding to the defective chip. For example; if the digital self test reveals that RAM chip number four is defective the Model 224 displays the following:

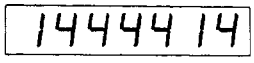

This informs the user that RAM chip number four is defective. Refer to Figure 5-3 for chip number assignment.

Table 5-6. Model 224 Calibration

Step	224 Setting (Range)	Compliance	Adjustment Point	Shunt R	Model 192 Range	Allowable Reading on the Model 192 at 5 1/2-Digit Resolution
A	1.9E-3	30V	R303	1kΩ	2VDC	(1kΩ) (1.9E-3) = Calculated Output ±300ppm or 570μV
B	-1.9E-3	30V	R318	1kΩ	2VDC	(1kΩ) (-1.9-3) = Calculated Output ±300ppm or 570μV
C	100E-3	30V	R387	10Ω	2VDC	(10Ω) (100E-3) = Calculated Output ±750ppm or 750μV
D	19E-3	30V	R386	100Ω	2VDC	(100Ω) (19E-3) = Calculated Output ±300ppm or 570μV
E	190E-6	30V	R385	100kΩ	20VDC	(100kΩ) (190E-6) = Calculated Output ±250ppm or 4.8mV
F	19E-6	30V	R384	100kΩ	2VDC	(100kΩ) (19E-6) = Calculated Output ±300ppm or 570μV

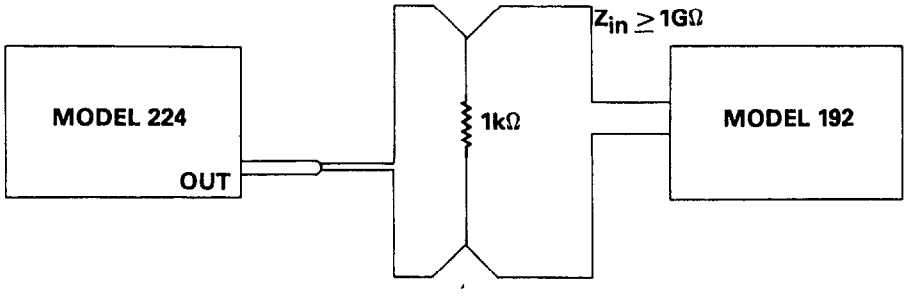

Figure 5-2. Calibration Configuration

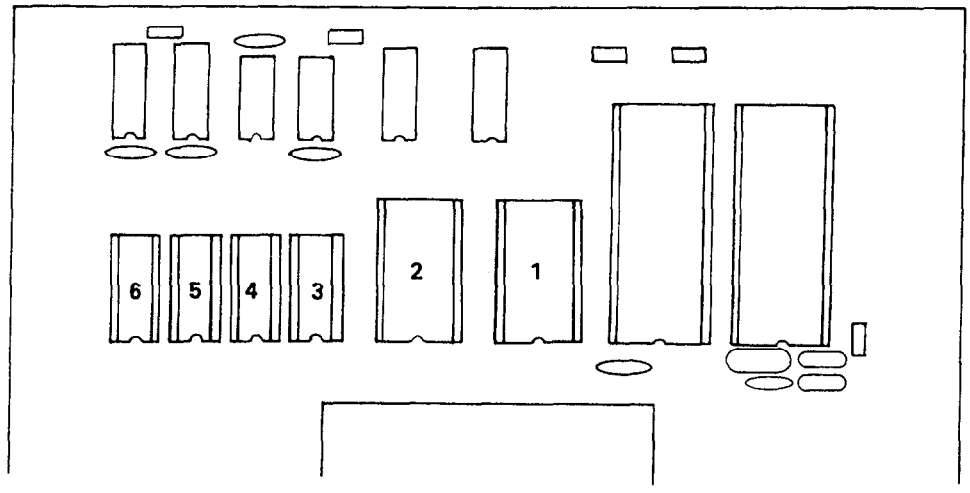

Figure 5-3. Memory Chip Number Assignment

Table 5-7. Power Supply Checks

Step	Item/ Component	Required Condition	Remarks
		Unit turned on, properly rated F101 has continuity. Line selected switch S102 verified in correct position.	
1	Q319 Collector	+130VDC ±15%	−125V Supply*
2	Q318 Collector	−130VDC ±15%	−125V Supply*
3	VR301 Input	+15VDC ±15%	+15V Supply**
4	VR311 pin 14	−15VDC ±15%	-15V Supply**
5	TP2	+5VDC ±5%	+5V Digital Supply***

*Referenced to output common. ▽

**Referenced to analog common. ▼

***Reference to digital common. ⏚

Table 5-8. Analog Board Checks

Step	Item/Component	Required Condition	Remarks
		Program the Model 224 for 100mA at a 100V compliance. Press operate.	Connect a 100Ω, 1W load resistor across the output.
1	U320 pin 11	+0.7V ±.1V	100mA range relay and output relay are energized.
2	U315 pin 2	+9.8V ±0.1V	Output of sense amplifier.
		Program the Model 224 to output 10mA.	
3	U320 pin 15	+0.7V ±.1V	10mA range relay is energized.
		Program the Model 224 to output 1mA.	
4	U320 pin 15	+0.7V ±.1V	1mA range relay is energized.
		Program the Model 224 to output 100μA.	
5	U320 pin 15	+0.7V ±.1V	100μA range relay is energized.
		Program the Model 224 to output 10μA.	
6	U320 pin 15	0.7V ±.1V	10μA range relay is energized.
		Program the Model 224 to output 1μA.	
7	U320 pins 11, 12 13, 14 and 15.	+5V ±.5V	All other range relays are de-energized.
8	U309 pin 1	-5V (For a programmed compliance limit of 100V).	
9	U311 pins 24 and 16	+6.3V ±.1V	12 Bit DAC Reference
10	U310 pin 6	−6.3V ±.1V	8 Bit DAC Reference
11	U316 pin 9	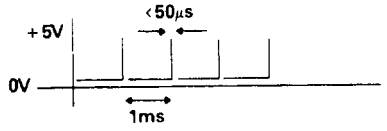	Latch Line
12	U304 pin 12	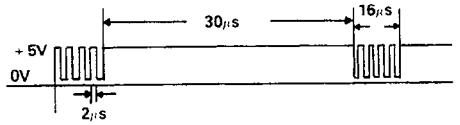	Clock Line

NOTE

All measurements in Table 5-8 are referenced to analog common (guard).

Table 5-9. Digital Circuitry Checks

Step	Item/Component	Required Condition	Remarks
1	J1004 pins 1, 2 and 4 (referenced to pins 24, 25 and 26)	+5V ±5%	+5V Digital Supply
2	U315 pin 37 (Φ2)	0V to 4V squarewave at 1MHz	1MHz Clock
3	U115 Pin 40 (reset)	+5V ±5%	Reset Line
4	U114 pin 15	Negative going pulse (+5V to 0V) occuring every 8msec.	Strobe for display board.
5	U114 pin 39	Negative going pulse (+5V to 0V) occuring every 1msec	Clock input for Display Board
6	U115 pin 4, U114 pin 21	1kHz clock	IRQ Line
7	U111, U110, U103, U105 U101 and U107	RAM and ROM (see paragraph 5.8.1 Digital Self Test)	Digital Self Test
8	U117 pin 6 (Referenced to Analog Common)	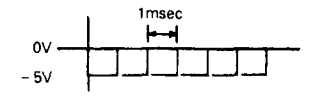	Data Out Line (Analog Side)
9	U117 pin 4 (Referenced to Analog Common)	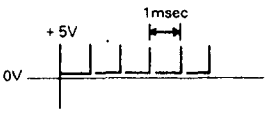	Data in Line (Analog Side)
10	U113 pin 3 (Referenced to Digital Common)	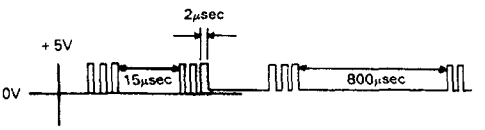	Clock to Analog Side
11	U113 pin 6 (Referenced to Digital Common)	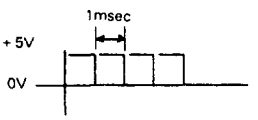	Latch Enable

Table 5-10. Display Board Checks

Step	Item/Component	Required Condition	Remarks
1	Display	Turn on Power +1.8.8.8.8+1.8	All display segments and LEDs will light for several seconds.
2	P1002 pins 9 and 14	+5V ±5%	If low, check per Table 5-7.
3	U203 pin 1		Update Data
4	U203 pin 8		Clock.

SECTION 6
REPLACEABLE PARTS

6.1 INTRODUCTION

This section contains replacement parts information, schematic diagrams and component location drawings for the Model 224. An illustration of the fan assembly is shown in Figure 6-1.

6.2 PARTS LIST

Parts are listed alphabetically in order of their circuit designations. Table 6-1 contains an index of the schematic diagrams and component location drawings. Table 6-2 contains a parts list for the Model 224 mother board. Table 6-3 contains a parts list for the display board. Table 6-4 contains a parts list for the analog board.

Table 6-1. Index of Model 224 Schematics and Component Layouts

Title	Figure
Display Board Component Layout	6-2
Mother Board Component Layout	6-3
Analog Board Component Layout	6-4
Display Board Schematic	6-5
Mother Board Schematic	6-6
Analog Board Schematic	6-7

6.3 ORDERING INFORMATION

To place an order, or to obtain information concerning replacement parts, contact your Keithley representative or the factory. See the inside front cover for addresses. When ordering include the following information:

1. Instrument Model Number
2. Instrument Serial Number
3. Part Description
4. Circuit Description (If applicable)
5. Keithley Part Number

If an additional instruction manual is required, order the manual package (Keithley Part Number 224-901-00). The manual package includes an instruction manual and all pertinent addenda.

6.4 FACTORY SERVICE

If the instrument is to be returned to the factory for service, complete the service form which follows this section and return it with the instrument.

6.5 SCHEMATIC DIAGRAMS AND COMPONENT LOCATION DRAWINGS

Schematic diagrams and component location drawings follow the replaceable parts list in the order listed in Table 6-1.

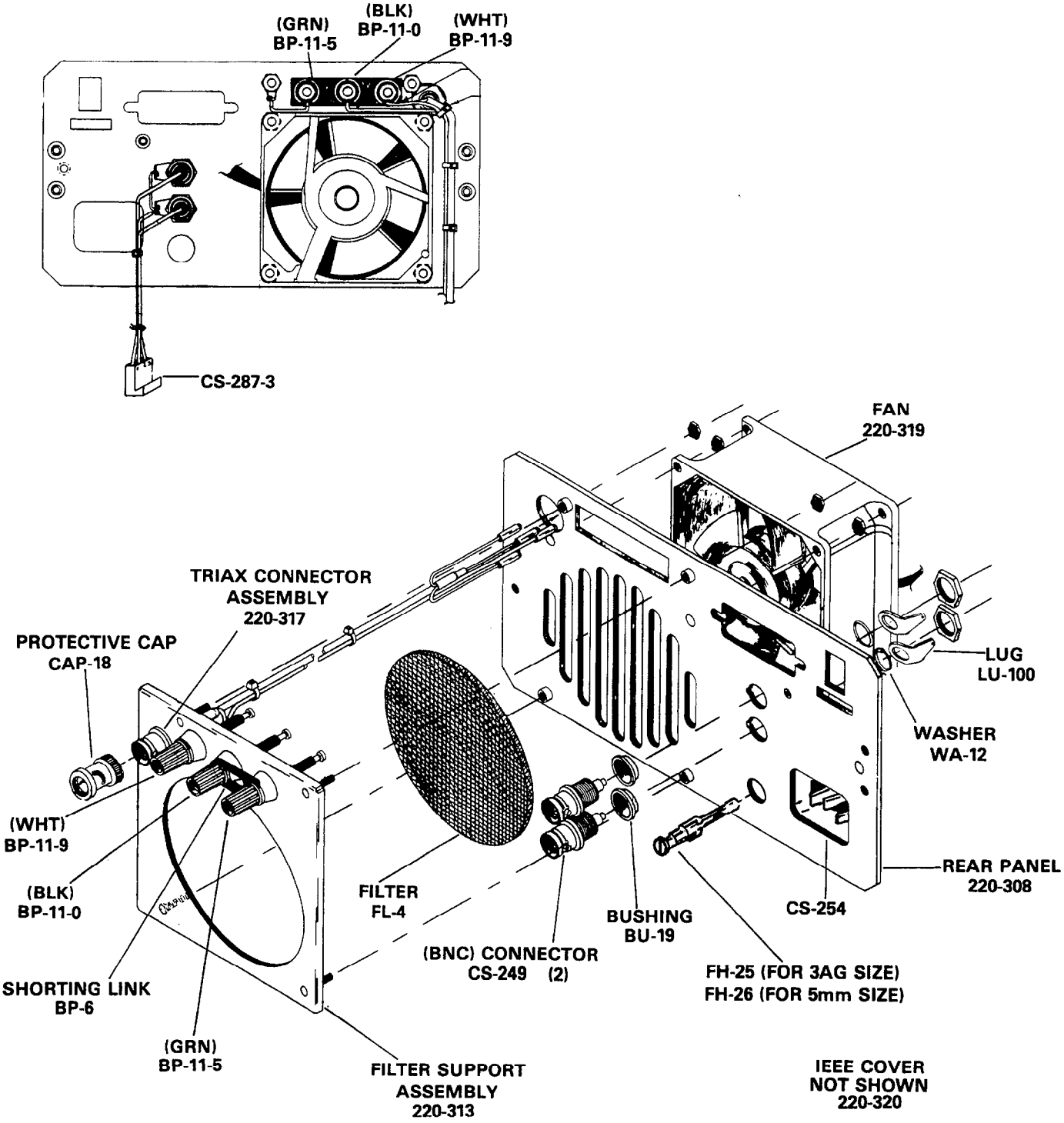

NOTE: Mechanical parts that are replaceable show the appropriate part number. The parts that are labeled but do not have a part number are shown for reference purposes only.

Figure 6-1. Fan Assembly

Table 6-2. Mother Board, Parts List

Circuit Desig.	Description	Location Sch	Location Pcb	Keithley Part No.
AT101	Optical Isolator, 6N137	G1	D4	IC-292
AT102	Optical Isolator, 6N137	G3	D4	IC-292
AT103	Optical Isolator, 6N137	G2	D5	IC-292
AT104	Optical Isolator, 6N137	G3	D5	IC-292
C101	.1μF, 16V, Ceramic Disc	E4	D2	C-238-.1
C102	.1μF, 16V, Ceramic Disc	G4	D2	C-238-.1
C103	10μF, 25V, Aluminum Electrolytic	D4	D2	C-314-10
C104	6800pF, 500V, Ceramic Disc	F5	D2	C-22-.0068
C105	.1μF, 16V, Ceramic Disc	E5	D2	C-238-.1
C106	.01μF, 500V, Ceramic Disc	B4	G3	C-22-.01
C107	10,000μF, 25V, Aluminum Electrolytic	C4	G3	C-342-10000
C108	.1μF, 16V, Ceramic Disc	F2	D3	C-238-.1
C109	.1μF, 16V, Ceramic Disc	F1	D4	C-238-.1
C110	.1μF, 16V, Ceramic Disc	C1	C4	C-238-.1
C111	.1μF, 16V, Ceramic Disc	G3	E4	C-238-.1
C112	.1μF, 16V, Ceramic Disc	G2	E5	C-238-.1
C113	.1μF, 16V, Ceramic Disc	B1	C5	C-238-.1
C114	22pF, 1000V, Ceramic Disc	B3	C5	C-64-22p
C115	22pF, 1000V, Ceramic Disc	B3	C5	C-64-22p
C116	.1μF, 16V, Ceramic Disc	G3	E5	C-238-.1
C117	330μF, 160V, Aluminum Electrolytic	D2	E5	C-337-330
C118	330μF, 160V, Aluminum Electrolytic	C2	E5	C-337-330
C119	10μF, 25V, Aluminum Electrolytic	D3	F5	C-314-10
C120	10μF, 25V, Aluminum Electrolytic	D3	F6	C-314-10
C121	1000μF, 35V, Aluminum Electrolytic	C3	F6	C-309-1000
C122	1000μF, 35V, Aluminum Electrolytic	D3	F6	C-309-1000
C123	330pF, 500V, Ceramic Disc	F5	E3	C-22-330p
CR101	Rectifier Bridge (5A), PEO5	C4	G3	RF-48
CR102	Rectifier, 1N4006	C2	F4	RF-38
CR103	Rectifier, 1N4006	C2	E4	RF-38
CR104	Rectifier, 1N4006	C2	E4	RF-38
CR105	Rectifier, 1N4006	C2	E4	RF-38
CR106	Rectifier, 1N4006	C3	F5	RF-38
CR107	Rectifier, 1N4006	C3	F5	RF-38
CR108	Rectifier Bridge (1.5A), PF-40	C3	F5	RF-46
CR109	Rectifier, 1N4006	G5	E3	RF-38
CR110	Rectifier, 1N4006	G5	E3	RF-38
CR111	Rectifier, 1N4006	G5	E3	RF-38
CR112	Rectifier, 1N4006	G5	—	RF-38
F101	Fuse, 3/8 Amp, 250V, Slo-Blo	A4	H3	FU-18
F101	Fuse, 3/4 Amp, 250V, Slo-Blo	A4	H3	FU-19
F101	Fuse, 8/10 Amp, 250V, Slo-Blo	A4	H3	FU-52*
F101	Fuse, 4/10 Amp, 250V, Slo-Blo	A4	H3	FU-53*
	Fuse Holder, Line Power Fuse	—	G3	FH-21
J1001	Power Connector	A4	G2	CS-338
J1003	Cable Assembly (26-pin)	—	E5	CA-10-3
J1008	Socket 16-pin	H5	—	SO-65
P1004	500V, Connector Male (for IEEE Board)	—	B3	CS-389-3
P1005	2 pin, Connector	A/B1	G2	CS-288-2
P1006	3 pin, Molex Connector (for External Trigger)	H5	D2	CS-288-3

Table 6-2. Mother Board, Parts List (Cont.)

Circuit Desig.	Description	Location Sch	Location Pcb	Keithley Part No.
R101	18k, 5%, 1/4W, Composition	F4	D2	R-76-18k
R102	4.7k, 5%, 1/4W, Composition	F1	D3	R-76-4.7k
R103	220k, 5%, 1/4W, Composition	C4	F3	R-76-220k
R104	4.7k, 5%, 1/4W, Composition	F2	E4	R-76-4.7k
R105	390Ω, 5%, 1/4W, Composition	F1	E4	R-76-390
R106	220Ω, 5%, 1/4W, Composition	G3	D4	R-76-220
R107	2.4k, 5%, 1/4W, Composition	G3	E4	R-76-2.4k
R108	220Ω, 5%, 1/4W, Composition	G2	D5	R-76-220
R109	2.4k, 5%, 1/4W, Composition	G2	E5	R-76-2.4k
R110	220Ω, 5%, 1/4W, Composition	G2	D5	R-76-220
R111	2.4k, 5%, 1/4W, Composition	G2	E5	R-76-2.4k
R112	4.7k, 5%, 1/4W, Composition	H1	E5	R-76-4.7k
R113	220Ω, 5%, 1/4W, Composition	G1	E5	R-76-220
R114	Thick Film Resistor Network	E5	B5	TF-140
R115	4.7k, 5%, 1/4W, Composition	F3	C5	R-76-4.7k
R118	100k, ±10%, 1/2W, Composition	D2	E5	R-1-100k
R119	100k, ±10%, 1/2W, Composition	D2	E5	R-1-100k
R121	100Ω, ±10%, 1/2W, Composition	G5	E3	R-1-100
R122	100Ω, ±10%, 1/2W, Composition	G4	E3	R-1-100
R125	4.7k, 5%, 1/4W, Composition	E2	D4	R-76-4.7k
R126	10k, 5%, 1/4W, Composition	F1	D5	R-76-10k
R127	4.7k, 5%, 1/4W, Composition	G4	E3	R-76-4.7k
R128	47kΩ, 10%, 0.25W, Composition	G5	E3	R-76-47k
S101	Switch, Power	A3	B2	SW-426
S102	Switch, Line Voltage Selection	A3	G2	SW-397
T101	Transformer	B2	F2	TR-186
T101	Transformer (special for 90V-110V 180V-220V operation)	B2	F2	TR-187
U101	1024 × 4-bit Static RAM, 2114	D5	C2	LSI-15
U102	Oscillator/Clock, 4060	E4	D2	IC-197
U103	1024 × 4-bit Static RAM, 2114	C5	C2	LSI-15
U104	Up/Down Counter, 74LS193	F4	D2	IC-214
U105	1024 × 4-bit Static RAM, 2114	D6	C2	LSI-15
U106	Quad 2-In. Nand Gate, 74LS00	SEV	D2	IC-163
U107	1024 × 4-bit Static RAM, 2114	SEV	C3	LSI-15
U108	Quad 2-In. NOR Gate, 74LS02	SEV	D3	IC-179
U109	Erasable Prom, 2732	B5	C3	224-800-**
U110	Decoder/Demultiplexer, 74LS138	F3	D3	IC-182
U111	Erasable Prom, 2732	A5	C4	224-801-**
U112	8-bit Shift Register, 14094	E1	D4	IC-251
U113	Quad Exclusive OR Gate, 7486	SEV	D4	IC-116
U114	Interface Adapter, SY6522	C2	C4	LSI-28
U115	Microprocessor, MC6808	B2	C5	LSI-27
U116	Bus Driver, 14503	E6	C5	IC-250
U117	Hex Inverter, 16-pin DIP, 4049	SEV	E5	IC-106
VR101	5V Regulator, LM309K	D4	F4	IC-98†
VR102	±15V, 3-term, 7915	D3	F5	IC-174***
VR103	3-term Positive Voltage Regulator, 7815	D3	F5	IC-96***
W101	Jumper	B6	D2	J-3
W102	Jumper	B6	D2	J-3
Y101	4.0 MHZ Crystal	—	C5	CR-10

*For use with special factory installed transformer TR-187.

**Order same software as presently installed. For example if B5 is displayed on power-up, order 224-800-B5 for U109.

***Order heat sink mounting kit (MK-18) and heat sink (HS-15) with these parts.

†Order heat sink mounting kits (MK-16 and MK-20) and heat sink (HS-22) with this part.

Table 6-3. Display Board, Parts List

Circuit Desig.	Description	Location Sch	Location Pcb	Keithley Part No.
C201	10μF, 25V, Aluminum Electrolytic	D5	C3	C-314-10
DS201	±1, Digital Display	B1	B2	DD-31
DS202	"8" Digital Display	C1	B2	DD-20
DS203	"8" Digital Display	C1	C2	DD-20
DS204	"8" Digital Display	D1	C2	DD-20
DS205	"8" Digital Display	D1	D2	DD-20
DS206	±1, Digital Display	E1	D2	DD-31
DS207	"8" Digital Display	E1	E2	DD-20
DS208	Pilot Light	G3	E1	PL-67
DS209	Pilot Light	G2	E2	PL-67
DS210	Pilot Light	E2	E2	PL-67
DS211	Pilot Light	G3	B2	PL-67
DS212	Pilot Light	H3	B2	PL-67
DS213	Pilot Light	H3	C2	PL-67
DS214	Pilot Light	F3	D2	PL-67
DS215	Pilot Light	F3	D2	PL-67
DS216	Pilot Light	G3	E2	PL-67
DS217	Pilot Light	G3	E2	PL-67
DS218	Pilot Light	H3	C3	PL-67
DS219	Pilot Light	F3	D3	PL-67
P1002	Cable Assembly	A6	E4	CA-15-1
Q201	PNP Silicon Transistor, 2N4355	F5	E1	TG-90
Q202	PNP Silicon Transistor, 2N4355	H5	E1	TG-90
Q203	PNP Silicon Transistor, 2N4355	H5	E1	TG-90
Q204	PNP Silicon Transistor, 2N4355	H5	E1	TG-90
Q205	PNP Silicon Transistor, 2N4355	F5	E2	TG-90
Q206	PNP Silicon Transistor, 2N4355	G5	E2	TG-90
Q207	PNP Silicon Transistor, 2N4355	G5	E2	TG-90
Q208	PNP Silicon Transistor, 2N4355	G5	E2	TG-90
R201	Thick Film Resistor Network	SEV	D2	TF-165-1
R202	Thick Film Resistor Network	SEV	F1	TF-77
S201	Pushbutton Switch	A3	B2	SW-435
S202	Pushbutton Switch	B3	B2	SW-435
S203	Pushbutton Switch	B3	C2	SW-435
S204	Pushbutton Switch	A3	D2	SW-435
S205	Pushbutton Switch	A3	D2	SW-435
S206	Pushbutton Switch	B4	E2	SW-435
S207	Pushbutton Switch	B4	E2	SW-435
S208	Pushbutton Switch	A4	B3	SW-435
S209	Pushbutton Switch	A4	C3	SW-435
S210	Pushbutton Switch	B4	D3	SW-435
S211	Pushbuton Switch	B4	D3	SW-435
S212	Pushbutton Switch	A4	E3	SW-435
S213	Pushbutton Switch	A4	E3	SW-435
S214	Pushbutton Switch	B5	F2	SW-435
S215	Pushbutton Switch	B5	F2	SW-435
S216	Pushbutton Switch	A5	G2	SW-435
S217	Pushbutton Switch	A5	F2	SW-435
S218	Pushbutton Switch	A3	F2	SW-435
S219	Pushbutton Switch	B3	G2	SW-435
S220	Pushbutton Switch	B3	F3	SW-435

Table 6-3. Display Board, Parts List (Cont.)

Circuit Desig.	Description	Location Sch	Location Pcb	Keithley Part No.
S221	Pushbutton Switch	A2	F3	SW-435
S222	Pushbutton Switch	A2	G3	SW-435
S223	Pushbutton Switch	B2	F3	SW-435
S224	Pushbutton Switch	B2	F3	SW-435
S225	Pushbutton Switch	A2	G3	SW-435
U201	MOS to LED Segment Driver, 75492	SEV	B3	IC-169
U202	MOS to LED Segment Driver, 75492	SEV	C3	IC-169
U203	8-bit Shift Register, 74LS164	C5	D3	IC-127
U204	MOS to LED Segment Driver, 75492	SEV	E3	IC-169

Table 6-4. Analog Board, Parts List

Circuit Desig.	Description	Location Sch	Location Pcb	Keithley Part No.
C301	.1μF, 16V, Ceramic Disc	F3	B2	C-238-.1
C302	.1μF, 16V, Ceramic Disc	E3	B2	C-238-.1
C303	.1μF, 16V, Ceramic Disc	C2	D1	C-238-.1
C304	.01μF, 500V, Ceramic Disc	B4	D1	C-22-.01
C305	.47μF, 50V, Ceramic Film	A4	D2	C-237-.47
C306	470pF, 1000V, Ceramic Disc	C3	D2	C-64-470p
C307	.01μF, 500V, Ceramic Disc	F5	B2	C-22-.01
C308	.02μF, 500V, Ceramic Disc	F4	B2	C-22-.02
C309	.02μF, 500V, Ceramic Disc	E2	C2	C-22-.02
C310	470pF, 1000V, Ceramic Disc	C2	C3	C-64-470p
C311	.001μF, 500V, Ceramic Disc	B1	B3	C-22-.001
C312	10μF, 25V, Aluminum Electrolytic	D1	B3	C-314-10
C313	.001μF, 500V, Ceramic Disc	D2	B3	C-22-.001
C314	10pF, 500V, Polystyrene	D3	B3	C-138-10p
C315	10μF, 25V, Aluminum Electrolytic	C5	D4	C-314-10
C316	10μF, 25V, Aluminum Electrolytic	C4	D4	C-314-10
C317	4.7μF, 350V, Aluminum Electrolytic	F3	F3	C-240-4.7
C318	.01μF, 500V, Ceramic Disc	F2	E4	C-22-.01
C319	.1μF, 16VDC, Ceramic Disc	E2	E4	C-238-.1
C320	.001μF, 500V, Ceramic Disc	E2	E4	C-22-.001
C321	.1μF, 16VDC, Ceramic Disc	E2	E5	C-238-.1
C322	.01μF, 500V, Ceramic Disc	F1	F5	C-22-.01
C323	4.7μF, 350V, Aluminum Electrolytic	F1	F5	C-240-4.7
C324	10μF, 25V, Aluminum Electrolytic	B6	D5	C-314-10
C325	10μF, 25V, Aluminum Electrolytic	B6	D5	C-314-10
C326	0.1μF, 250V, Metalized Polyester	B4	D4	C-178-0.1
C327	10μF, 25V, Aluminum Electrolytic	B6	D4	C-314-10
C328	.01μF, 500V, Ceramic Disc	C5	D4	C-22-.01
C329	.01μF, 500V, Ceramic Disc	C5	D5	C-22-.01
C330	1.5μF, 25V, Aluminum Electrolytic	G4	D5	C-314-1.5
CR301	Diode, Germanium, 1N3592	E2	C2	RF-39
CR302	Silicon Diode, 1N914	C3	D3	RF-28
CR303	Silicon Diode, 1N914	C3	D3	RF-28
CR304	Diode Dual, Low Leakage, 1D101	D2	B3	DN-3
CR305	Rectifier, 1N3595	D3	B4	RF-43
CR306	Rectifier, 1N3595	E3	B5	RF-43
CR307	Silicon Diode, 1N914	A4	D3	RF-28
CR308	Silicon Diode, 1N914	B4	D4	RF-28
CR316	Silicon Diode, 1N914	F2	F4	RF-28
CR317	Silicon Diode, 1N914	F1	F5	RF-28
J1003	Connector, Male	B2	D5	CS-389-3
K305	Relay	SEV	B5	RL-70
K306	Relay	SEV	B5	RL-70
K307	Relay	SEV	B5	RL-50
Q301	N-Channel FET, 2N4393	E1	B3	TG-130
Q302	N-Channel FET, PF5301	D1	B3	TG-139
Q303	N-Channel FET, 2N4392	E4	C3	TG-128
Q304	N-Channel FET, 2N4392	F4	C3	TG-128
Q305	N-Channel FET, 2N4392	F4	C3	TG-128
Q306	N-Channel FET, 2N4392	G4	D3	TG-128
Q307	N-Channel FET, 2N4392	F4	C3	TG-128

Table 6-4. Analog Board, Parts List (Cont.)

Circuit Desig.	Description	Location Sch	Location Pcb	Keithley Part No.
Q308	N-Channel FET, 2N4392	F4	C3	TG-128
Q309	N-Channel FET, 2N4392	F4	C3	TG-128
Q310	N-Channel FET, 2N4392	G4	D3	TG-174
Q311	NPN-Power Transistor, 2N5190	D5	D3	TG-108
Q312	PNP-Power Transistor, 2N5193	D5	D4	TG-107
Q313	PNP, Transistor, Silicon, 2N3906	E3	E4	TG-84
Q314	PNP, Transistor, Silicon, 2N3906	F2	F4	TG-84
Q315	NPN, Silicon, 2N3904	E2	E5	TG-47
Q316	Diode Current Unit, J505	E1	F5	TG-140
Q317	NPN, Silicon, 2N3904	F2	E5	TG-47
Q318	PNP, Transistor, MJ5012	F1	E5	TG-155*
Q319	NPN, Transistor, MJ5011	F3	E4	TG-154*
R301	301k, 1%, 1/8W, Metal Film	F5	B2	R-88-301k
R302	1M, 1%, 0.12W, Metal Film	G5	B2	R-88-1M
R303	100k Pot	G5	B1	RP-97-100k
R304	100k Pot	G5	B2	RP-97-100k
R305	49.9k, 1%, 1/8W, Metal Film	G5	B2	R-88-49.9k
R306	10k, 1%, 1/8W, Metal Film	G5	B2	R-88-10k
R307	6.04k, 1%, 1/8W, Metal Film	F5	B2	R-88-6.04k
R308	47k, 5%, .11W, Thick Film Resistor	E5	B2	TF-103-4
R309	47k, 5%, .11W, Thick Film Resistor	D5	C2	TF-103-3
R310	47k, 5%, .11W, Thick Film Resistor	D4	C2	TF-103-3
R311	47k, 5%, .11W, Thick Film Resistor	D1	C2	TF-103-4
R312	10k, 5%, 1/4W, Composition	B3	D1	R-76-10k
R313	1k, 5%, 1/4W, Composition	C4	D2	R-76-1k
R314	20k, 5%, 1/4W, Composition	C4	D2	R-76-20k
R315	2.2k, 5%, 1/4W, Composition	G3	D2	R-76-2.2k
R316	301k, 1%, 1/8W, Metal Film	F5	B2	R-88-301k
R317	22.2k, .1%, 1/10W, Metal Film	F4	B2	R-263-22.2k
R318	200Ω Pot	F4	B3	RP-97-200
R319	2k Pot	E2	B3	RP-97-2k
R320	22.2k, 1%, 1/10W, Metal Film	F4	C2	R-263-22.2k
R321	20k, 1%, 1/8W, Metal Film	F2	C2	R-88-20k
R322	20k, 1%, 1/8W, Metal Film	E1	C3	R-88-20k
R323	11k, 1%, 1/8W, Metal Film	G4	C2	R-88-11k
R324	10k, 5%, 1/4W, Composition	B2	C3	R-76-10k
R325	20k, 5%, 1/4W, Composition	C3	C3	R-76-20k
R326	1k, 5%, 1/4W, Composition	C3	C3	R-76-1k
R327	10k, 5%, 1/4W, Composition	B2	C3	R-76-10k
R328	1k, 1%, 1/8W, Metal Film	E2	C2	R-88-1k
R329	4.99k, 1%, 1/8W, Metal Film	B2	D2	R-88-4.99k
R330	1M, 5%, 1/4W, Composition	C2	D2	R-76-1M
R331	4.99k, 1%, 0.12W, Metal Film	B3	D2	R-88-4.99k
R332	1M, 5%, 1/4W, Composition	B3	D2	R-76-1M
R333	1k, 5%, 1/4W, Composition	C3	D3	R-76-1k
R334	100Ω, 5%, 1/4W, Composition	C5	D3	R-76-100
R335	470Ω, 5%, 1/4W, Composition	D5	D3	R-76-470
R336	4.7k, 5%, 1/4W, Composition	F5	C3	R-76-4.7k
R337	4.7k, 5%, 1/4W, Composition	E5	C3	R-76-4.7k
R338	24k, 5%, 1/4W, Composition	C1	B3	R-76-24k
R339	39Ω, 5%, 1/4W, Composition	C1	B3	R-76-39
R340	39Ω, 5%, 1/4W, Composition	C2	B3	R-76-39

Table 6-4. Analog Board, Parts List (Cont.)

Circuit Desig.	Description	Location Sch	Location Pcb	Keithley Part No.
R341	24k, 5%, 1/4W, Composition	C2	B3	R-76-24k
R342	1k, 5%, 1/4W, Composition	E2	B3	R-76-1k
R343	10k Pot	D2	B3	RP-97-10k
R344	10k, 5%, 1/4W, Composition	D2	B3	R-76-10k
R345	470k, 5%, 1/4W, Composition	E2	B3	R-76-470k
R346	47k, 5%, 1/4W, Composition	B1	B3	R-76-47k
R347	15k, 5%, 1/4W, Composition	B1	B3	R-76-15k
R348	2.4k, 5%, 1/4W, Composition	D1	B3	R-76-2.4k
R349	10k, 1%, 0.12W, Metal Film	D2	B3	R-88-10k
R350	100k, .11W, Thick Film Resistor	SEV	C3	TF-103-2
R351	10k, 5%, 1/4W, Composition	A4	D3	R-76-10k
R352	10k, 5%, 1/4W, Composition	A4	D3	R-76-10k
R353	2.2M, 10%, 0.25W, Composition	B4	D4	R-76-2.2M
R359	100k, 1%, 1/4W, Composition	D3	C4	R-88-100k
R360	1k, 1%, 1/4W, Composition	D3	C4	R-76-1k
R363	2.2k, 5%, 1/4W, Composition	E3	E4	R-76-2.2k
R364	24k, 5%, 1/4W, Composition	E3	E4	R-76-24k
R365	100k, 1%, 1/2W, Metal Film	C3	F4	R-94-100k
R366	100k, 1%, 1/2W, Metal Film	B3	F4	R-94-100k
R367	10Ω, 1%, 0.12W, Metal Film	G2	F4	R-88-10
R368	13Ω, 1%, 0.12W, Metal Film	G2	F4	R-88-13
R369	22Ω, 10%, 1/2W, Composition	F1	F4	R-1-22
R370	22Ω, 10%, 1/2W, Composition	F2	F5	R-1-22
R371	2.2k, 5%, 1/4W, Composition	E1	E5	R-76-2.2k
R372	13Ω, 1%, 1/8W, Metal Film	G1	F5	R-88-13
R373	10Ω, 1%, 0.12W, Metal Film	G1	F5	R-88-10
R374	4.7k, 5%, 1/4W, Composition	E2	E5	R-76-4.7k
R375	54.1k, .1%, 1/10W, Metal Film	F3	D5	R-263-54.1k
R376	4.93k, .1%, 1/10W, Metal Film	F4	D5	R-263-4.93k
R377	20k, 1%, 0.12W, Metal Film	G3	C5	R-88-20k
R379	485k, .1%, 1/4W, Metal Film	F3	C4	R-264-485k
R380	499Ω, .1%, 1/25W, Metal Film	G4	C5	R-286-499
R381	100Ω, 0.1%, 3W, Fixed	G4	C5	R-308-100
R382	49.9k, 1%, 0.12W, Metal Film	G5	C5	R-88-49.9k
R383	3.57k, 1%, 0.12W, Metal Film	G3	D5	R-88-3.57k
R384	5k, Pot	F4	C5	RP-95-5k
R385	500 Pot	F4	C5	RP-97-500
R386	10k Pot	G4	C5	RP-97-10k
R387	1k Pot	G4	C5	RP-97-1k
R388	100k, 5%, 1/4W, Composition	D4	D5	R-76-100k
R389	10k, 5%, 1/4W, Composition	B3	D5	R-76-10k
R390	10k, 5%, 1/4W, Composition	B4	D5	R-76-10k
R391	10k, 5%, 1/4W, Composition	B3	D5	R-76-10k
R392	10k Pot	F4	B3	RP-97-10k
R393	3.9k, 5%, 1/4W, Film or Composition	E2	D4	R-76-3.9k
U301	8-bit Shift Register, 14094	C4	B1	IC-251
U302	8-bit Shift Register, 14094	C3	C1	IC-251
U303	8-bit Shift Register, 14094	C2	C1	IC-251
U304	Quad 2-Input AND, 4081	SEV	D2	IC-138
U305	Quad 2-Input NAND, 4011	SEV	D2	IC-102
U306	Quad Monolithic SPST CMOS Analog Switch, LM317T	SEV	C2	IC-320
U307	Wide Bandwidth Dual JFET, LF353N	E5	C2	IC-246
U308	CMOS 8-bit Multiplying D/A Converter, AD7523	E2	C2	IC-321
U309	Wide Bandwidth Dual JFET, LF353N	E2	C2	IC-246

Table 6-4. Analog Board, Parts List

Circuit Desig.	Description	Location Sch	Location Pcb	Keithley Part No.
U301	Operational Amplifier, AD3247	E1	C2	IC-77
U311	Integrated Circuit D/A Converter, DAC80-CBI-V	E4	B2	IC-323
U312	Operational Amplifier, AD3247	F4	B3	IC-248
U313	Quad Comparator, LM339	SEV	B3	IC-219
U314	Quad 2 Input NAND, 4011	SEV	C3	IC-102
U315	Operational Amplifier, AD3247	B4	C3	IC-77
U316	Hex Inverter, 16-Pin, 4049	SEV	D3	IC-106
U317	Quad Comparator, LM339	SEV	C3	IC-219
U318	Decoder/Demultiplexer, 14555	SEV	C3	IC-312
U319	Op Amp, AD515K	D2	B3	IC-241
U320	High/Voltage, High/Current Transistor Array, VLN2003A	C5	C3	IC-206
VR301	+5V Regulator, 7805	B6	D5	IC-93

*Order heat sink (HS-22) and heat sink mounting kits (MK-16) and (MK-20) with these parts.

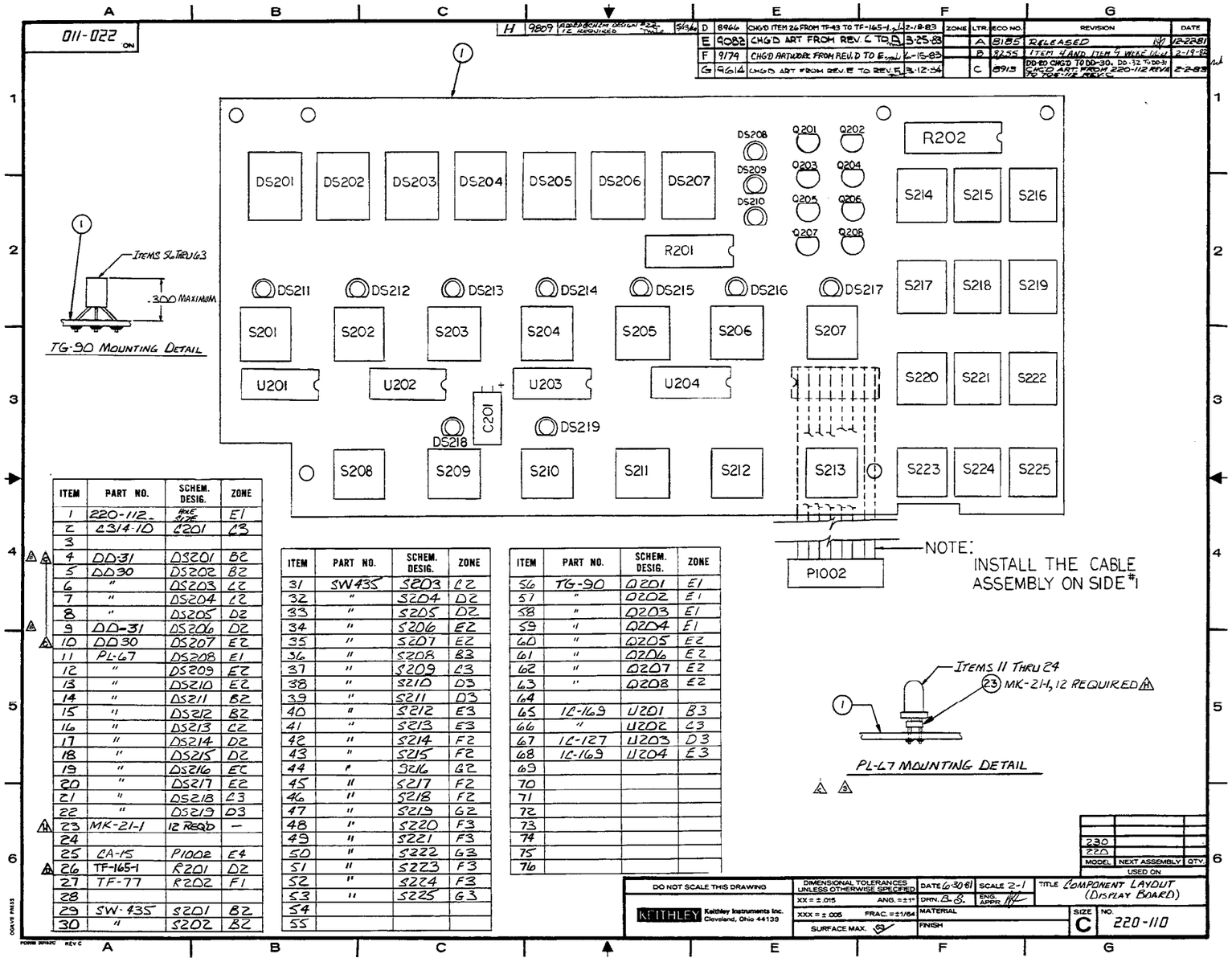

ITEM	PART NO.	SCHEM. DESIG.	ZONE
1	220-112-	WIRE SIDE	E1
2	C314-10	C201	C3
3			
4	DD-31	DS201	B2
5	DD30	DS202	B2
6	"	DS203	C2
7	"	DS204	C2
8	"	DS205	D2
9	DD-31	DS206	D2
10	DD30	DS207	E2
11	PL-67	DS208	E1
12	"	DS209	E2
13	"	DS210	E2
14	"	DS211	B2
15	"	DS212	B2
16	"	DS213	C2
17	"	DS214	D2
18	"	DS215	D2
19	"	DS216	E2
20	"	DS217	E2
21	"	DS218	C3
22	"	DS219	D3
23	MK-21-1	12 REQ'D	—
24			
25	CA-15	P1002	E4
26	TF-165-1	R201	D2
27	TF-77	R202	F1
28			
29	SW-435	S201	B2
30	"	S202	B2

ITEM	PART NO.	SCHEM. DESIG.	ZONE
31	SW435	S203	C2
32	"	S204	D2
33	"	S205	D2
34	"	S206	E2
35	"	S207	E2
36	"	S208	B3
37	"	S209	C3
38	"	S210	D3
39	"	S211	D3
40	"	S212	E3
41	"	S213	E3
42	"	S214	F2
43	"	S215	F2
44	"	S216	G2
45	"	S217	F2
46	"	S218	F2
47	"	S219	G2
48	"	S220	F3
49	"	S221	F3
50	"	S222	G3
51	"	S223	F3
52	"	S224	F3
53	"	S225	G3
54			
55			

ITEM	PART NO.	SCHEM. DESIG.	ZONE
56	TG-90	Q201	E1
57	"	Q202	E1
58	"	Q203	E1
59	"	Q204	E1
60	"	Q205	E2
61	"	Q206	E2
62	"	Q207	E2
63	"	Q208	E2
64			
65	IC-169	U201	B3
66	"	U202	C3
67	IC-127	U203	D3
68	IC-169	U204	E3
69			
70			
71			
72			
73			
74			
75			
76			

Figure 6-2. Display Board, Component Location Drawing, Dwg. No. 220-110

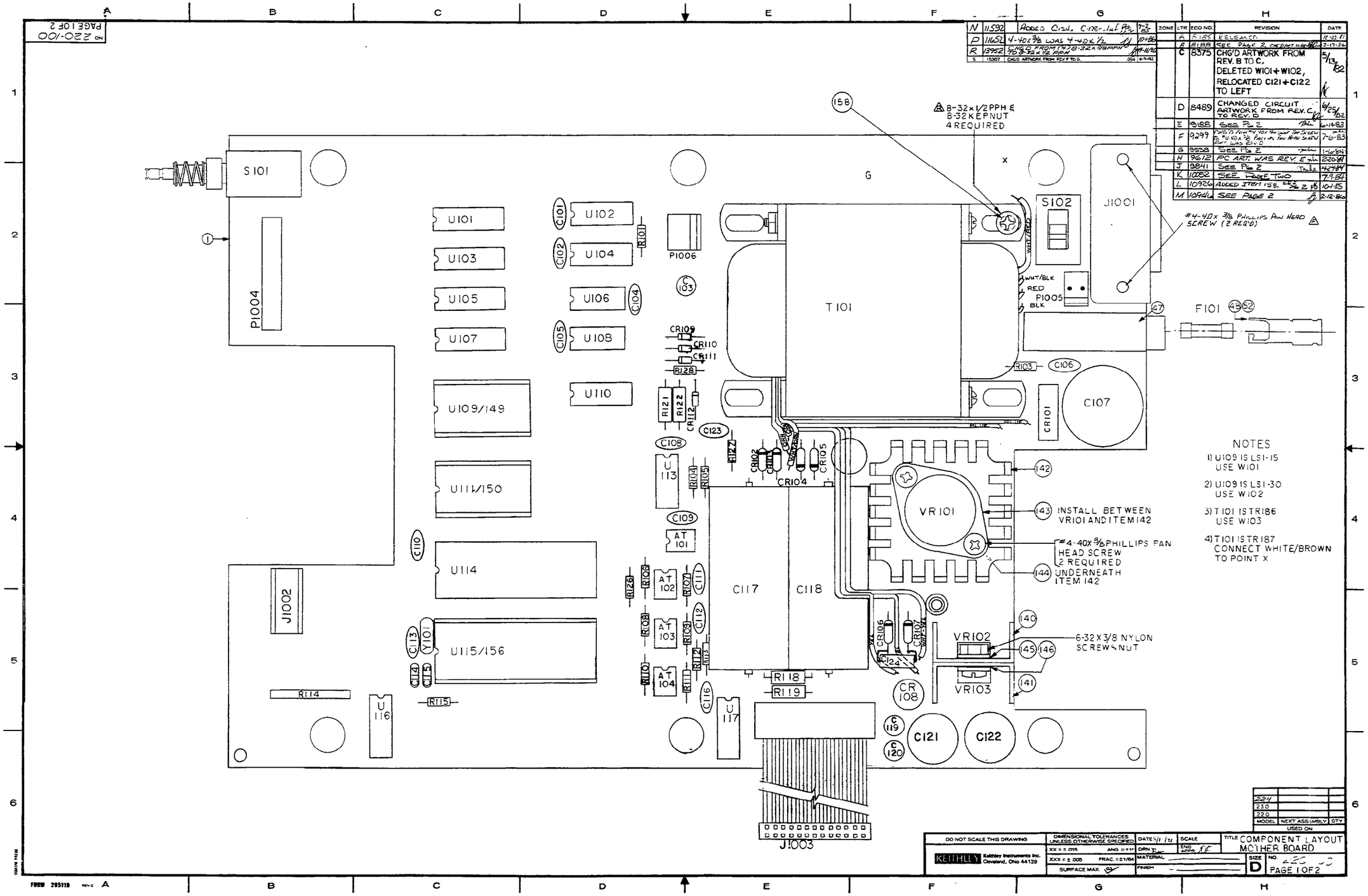

Figure 6-3. Mother Board, Component Location Drawing, Dwg. No. 220-100 (sheet 1 of 2)

PAGE 2 OF 2
001-022 ON

ZONE	LTR	ECO NO.	REVISION	DATE
	A	8185	RELEASED	12-22-81
	B	8188	ITEM 19 WAS FU-4, ITEM 20 WAS FU-17, ITEM 21 WAS FU-50, ITEM 94 WAS FU-51, ITEM 95 WAS R-76-47K, ITEM 72 WAS R-76-39Ω, ITEM 75 WAS R-76-51Ω, DELETED ITEM 63 TO 140, DELETED ITEMS R26-4.7K, DELETED ITEM 85, R36-10K, DELETED ITEM 123 J-3, ADDED ITEMS 124, 126, 157, ITEM 148 WAS MK-16	2-17-82
	C	8375	ITEM 10 WAS C-314-11600, DELETED ITEM 125 J3, DELETED ITEM 126 J3	5/13/82
	D	8489	CHG'D CIRCUIT ART REV E TO D SEE PAGE 1	6-25-82
	E	9188	ITEM #108 WAS LS1-25 ITEM #107 WAS LS1-30	6-14-83
	F	9299	MODEL SOFTWARE TABLE ADD	12-6-83
	G	9508	DELETED ITEMS 151-155	1-6-84
	H	9612	SEE PAGE 1	2-20-84
	J	9841	DELETED U112 R125 & R102 ADDED 224 SOFTWARE.	4-24-84
	K	10002	ITEM 121 WAS IC-98	7-7-84
	L	10926	ADDED ITEM 158	10-1-85
	M	11946	ITEM 98-DELETED SW-426A ADDED SW-466A	12-12-86
	N	11592	ITEM 35 WAS RF-64 ADDED ITEM 27. SEE PG. 1	9-2-86
	P	11652	SEE PG. 1	10-1-86
	R	13962	SEE PG. 1	4-16-90
	S	15307	SEE PG 1	6-6-92

ITEM	PART NO.	SCHEM. DESIG.	ZONE
1	220-101	STAKING	A 2
2			
3			
4	C-238-1	C101	D 2
5	C-238-1	C102	D 2
6	C-314-10	C103	D 2
7	C-22-.006S	C104	D 2
8	C-238-1	C105	D 3
9	C-22-.01	C106	G 3
10	C-342-10000	C107	G 3
11	C-235-1	C108	D 3
12	C-239-1	C109	D 4
13	C-239-1	C110	C 4
14	C-239-1	C111	E 4
15	C-235-1	C112	E 5
16	C-235-1	C113	C 5
17	C-64-22 PF	C114	C 5
18	C-64-22 PF	C115	C 5
19	C-238-1	C116	E 5
20	C-337-330	C117	E 5
21	C-337-330	C118	E 5
22	C-314-10	C119	F 5
23	C-314-10	C120	F 6
24	C-309-1000	C121	F 6
25	C-309-1000	C122	F 6
26	C-22-330 PF	C123	E 3
27	C-178-.1uF	C124	F5
28			
29			
30			
31			
32			
33			
34			
35	RF-64	CR101	G 3
36	RF-38	CR102	E 4
37	RF-38	CR103	E 4
38	RF-38	CR104	E 4
39	RF-38	CR105	E 4
40			

ITEM	PART NO.	SCHEM. DESIG.	ZONE
41	RF-38	CR106	F 5
42	RF-38	CR107	F 5
43	RF-46	CR108	F 5
44	RF-38	CR109	E 3
45	RF-38	CR110	E 3
46	RF-38	CR111	E3
47	FH-21		G 3
48	FH-25		H 3
49	FU-19	F101	H 3
50	FU-18	F101	H 3
51			
52	FH-26		H 3
53	FU-52	F101	H 3
54	FU-53	F101	H 3
55			
56	CS-388	J1001	G 2
57	CS-288-2	P1005	G 2
58			
59	CS-389-3	P1004	B3
60	CA-10-3	J1003	E 5
61	CS-288-3	P1006	D2
62			
63			
64			
65	R-76-18K	R101	D 2
66			
67	R-76-220K	R103	F 3
68	R-76-4.7K	R104	E 4
69	R-76-390	R105	E 4
70	R-76-220	R106	D 4
71	R-76-2.4K	R107	E 4
72	R-76-220	R108	D 5
73	R-76-2.4K	R109	E 5
74	R-76-220	R110	D 5
75	R-76-2.4K	R111	E 5
76	R-76-4.7K	R112	E 5
77	R-76-220	R113	E 5
78	TF-140	R114	B 5
79	R-76-4.7K	R115	C 5
80			

ITEM	PART NO.	SCHEM. DESIG.	ZONE
81			
82			
83	R-1-100K	R118	E 5
84	R-1-100K	R119	E 5
85			
86	R-1-100	R121	E3
87	R-1-100	R122	E3
88			
89			
90	SW-466	S101	B 2
91	SW-397	S102	G 2
92			
93			
94	TR 186	T101	F 2
95	TR 187	T101	F 2
96			
97	LS1-15	U101	C 2
98	IC-197	U102	D 2
99	LS1-15	U103	C 2
100	IC-214	U104	D 2
101	LS1-15	U105	C 2
102	IC-163	U106	D 2
103	LS1-15	U107	C 3
104	IC-179	U108	D 3
105	SEE TABLE	U109	C 3
106	IC-182	U110	D 3
107	SEE TABLE	U111	C 4
108			
109	IC-116	U113	D 4
110	LS1-28	U114	C 4
111	LS1-27	U115	C 5
112	IC-250	U116	C 5
113	IC-106	U117	E 5
114			
115			
116	IC 292	AT101	D 4
117	IC-292	AT102	D 4
118	IC-292	AT103	D 5
119	IC-292	AT104	D 5
120			

ITEM	PART NO.	SCHEM DESIG	ZONE
121	IC-34	VR101	F 4
122	IC-174	VR102	F 5
123	IC-96	VR103	F 5
124			
125			
126			
127			
128			
129	CR-10	Y 101	C 5
130			
131	RF-38	CR112	E3
132			
133			
134			
135	R-76-10K	R126	D5
136	R-76-4.7K	R127	E3
137	R-76-47K	R128	E3
138			
139			
140	HS-15		F 5
141	HS-15		F 5
142	HS-22		F 4
143	MK-16		F 4
144	MK-20		F4
145	MK-18		F 5
146	MK-18		F 5
147			
148	SO-65	J1002	B 5
149	SO-68		C 3
150	SO-68		C 4
151			
152			
153			
154			
155			
156	SO-84-40		C 5
157			
158	WA-41-2	4 REQ'D	E2
159			
160			

*NOTES:

1) FOR 100VJAPANESE VERSION SUBSTITUTE ITEM 95 (TR-187) FOR ITEM 94 (TR-186).
2) FOR EUROPEAN VERSION SUBSTITUTE FU-50 AND FU-51 FOR FU-4 AND FU-17 ALSO SUBSTITUTE FH-26 FOR FH-25.

SOFTWARE SELECTION TABLE

ITEM	SCHEMATIC DESIGNATION	MODEL 220 USAGE	MODEL 230 USAGE	MODEL 224 USAGE
105	U 109	220-800	230-800	224-800
107	U 111	220-801	230-801	224-801

SELECT APPROPRIATE SOFTWARE PER MODEL

MODEL	NEXT ASSEMBLY	QTY
224		
230		
220		

USED ON

DO NOT SCALE THIS DRAWING
DIMENSIONAL TOLERANCES UNLESS OTHERWISE SPECIFIED: XX = ± .015, ANG. = ±1°, XXX = ± .005, FRAC. = ±1/64, SURFACE MAX. 63
DATE 7/1/1 SCALE 1:1 DRN: ENG APPR: MATERIAL: FINISH:
KEITHLEY Keithley Instruments Inc. Cleveland, Ohio 44139
TITLE COMPONENT LAYOUT MOTHER BOARD
SIZE D NO. 220-100 PAGE 2 OF 2

FORM 28511D REV C

Figure 6-3. Mother Board, Component Location Drawing, Dwg. No. 220-100 (sheet 2 of 2)

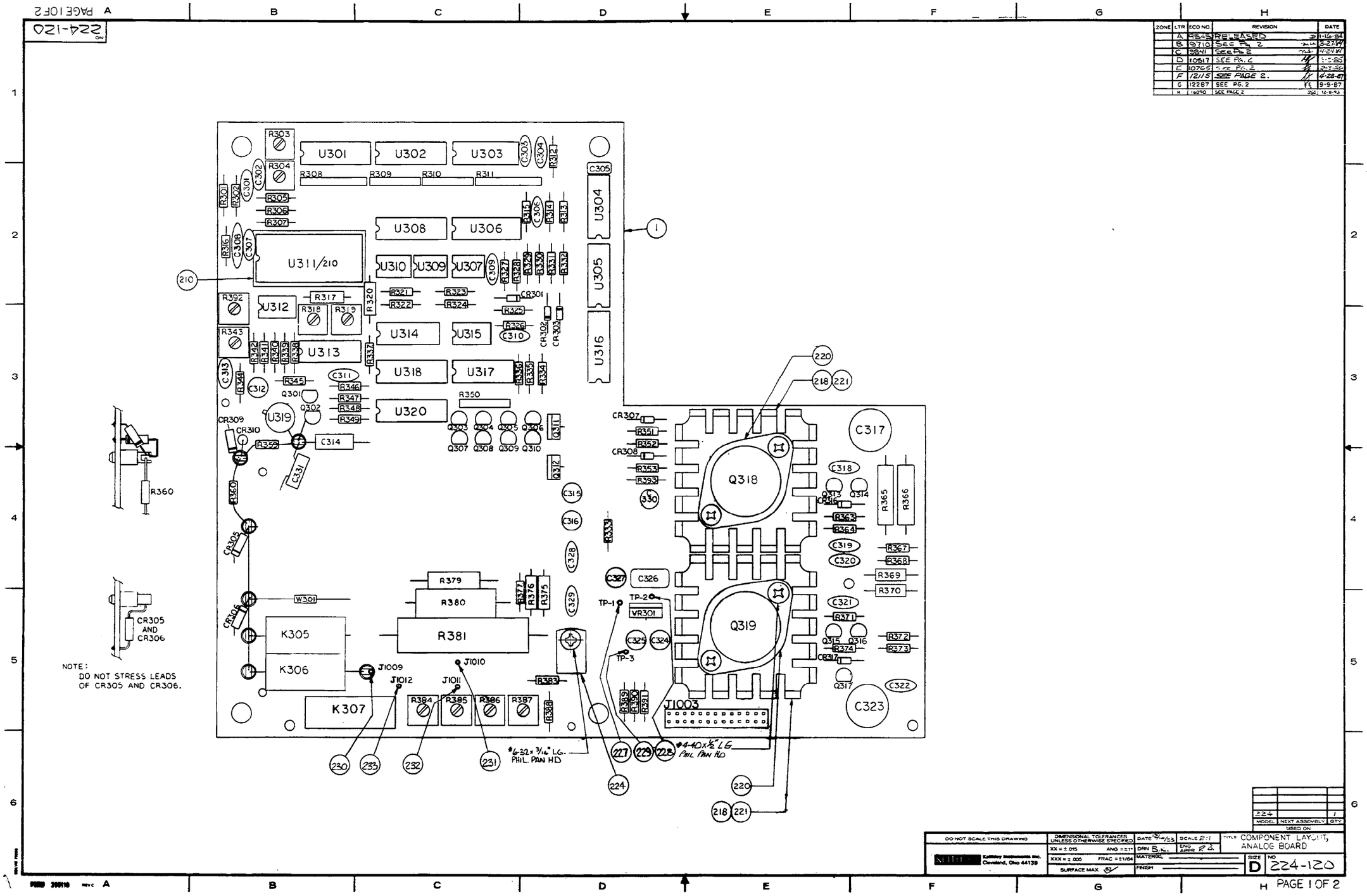

Figure 6-4. Analog Board, Component Location Drawing, Dwg. No. 224-120 (sheet 1 of 2)

224-120 ON

ZONE	LTR	ECO NO	REVISION	DATE
	A	9545	RELEASED @	1-16-84
	B	9710	ITEM 199 WAS 220-4.00	3-27-84
	C	9941	R338 & R341 WERE 24K R330 & R332 WERE 1M U313 WAS IC-241. R503 & R504 WERE EL-70. DELETED CR334 ADDED CR325, CR330, C331.	4-24-84
	D	10517	Q310 WAS TG-105	7-3-85
	E	10765	ADD HEATSINK & REV H	23-86
	F	12115	ITEMS 233 & 238 WERE IC-77	4-28-87
	G	12287	CHG'D ITEM 203 TO IC-77	9-9-87
	H	16090	ITEM 17 WAS C-336-120PF	12-8-93

ITEM	PART NO.	SCHEM. DESIG.	ZONE
1	224-.2	STAKING	
2			
3			
4	C-238-.1	C301	B2
5	"	C302	B2
6	"	C303	D1
7	C-22-.01	C304	D1
8	C-237-.47	C305	D2
9	C-64-470pF	C306	D2
10	C-22-.01	C307	B2
11	C-22-.02	C308	B2
12	C-22-.02	C309	C2
13	C-64-470pF	C310	C3
14	C-22-.001	C311	B3
15	C-314-10	C312	B3
16	C-22-.001	C313	B3
17	C-405-10P	C314	B3
18	C-314-10	C315	D4
19	"	C316	D4
20	C-240-4.7	C317	F3
21	C-22-.01	C318	E4
22	C-238-.1	C319	E4
23	C-22-.001	C320	E4
24	C-238-.1	C321	E5
25	C-22-.01	C322	F5
26	C-240-4.7	C323	F5
27	C-314-10	C324	D5
28	"	C325	D5
29	C-178-0.1μF	C326	D4
30	C-314-10	C327	D4
31	C-22-.01	C328	D4
32	"	C329	D5
33	C-314-1.5	C330	D4
34	C-282-2.5pF	C331	B4
35			
36			
37			
38	RF-39	CR301	C2
39	RF-28	CR302	D3
40	"	CR303	D3

ITEM	PART NO.	SCHEM. DESIG.	ZONE
41			
42	RF-43	CR305	B4
43	"	CR306	B5
44	RF-28	CR307	D3
45	"	CR308	D4
46	RF-43	CR309	B3
47	"	CR310	B3
48			
49			
50			
51			
52			
53	RF-28	CR316	F4
54	"	CR317	F5
55			
56			
57			
58			
59			
60			
61			
62	RL-45	K305	B5
63	"	K306	B5
64	RL-50	K307	B5
65			
66			
67	CS-389-3	J1003	D5
68			
69			
70	TG-130	Q301	B3
71	TG-139	Q302	B3
72	TG-128	Q303	C3
73	"	Q304	C3
74	"	Q305	C3
75	"	Q306	D3
76	"	Q307	C3
77	"	Q308	C3
78	"	Q309	C3
79	TG-114	Q310	D3
80	TG-108	Q311	D3

ITEM	PART NO.	SCHEM. DESIG.	ZONE
81	TG-107	Q312	D4
82	TG-84	Q313	E4
83	"	Q314	F4
84	TG-47	Q315	E5
85	TG-140	Q316	F5
86	TG-47	Q317	E5
87	TG-155	Q318	E4
88	TG-154	Q319	E5
89			
90			
91			
92	R-88-301K	R301	B2
93	R-88-1M	R302	B2
94	RP-97-100K	R303	B1
95	"	R304	B2
96	R-88-49.9K	R305	B2
97	R-88-10K	R306	B2
98	R-88-6.04K	R307	B2
99	TF-103-4	R308	B2
100	TF-103-3	R309	C2
101	"	R310	C2
102	TF-103-4	R311	C2
103	R-76-10K	R312	D1
104	R-76-1K	R313	D2
105	R-76-20K	R314	D2
106	R-76-2.2K	R315	D2
107	R-88-301K	R316	B2
108	R-263-22.2K	R317	B2
109	RP-97-200	R318	B3
110	RP-97-2K	R319	B3
111	R-263-22.2K	R320	C2
112	R-88-20K	R321	C2
113	"	R322	C3
114	R-88-11K	R323	C2
115	R-76-10K	R324	C3
116	R-76-20K	R325	C3
117	R-76-1K	R326	C3
118	R-76-10K	R327	C2
119	R-88-1K	R328	C2
120	R-88-4.99K	R329	D2

ITEM	PART NO.	SCHEM. DESIG.	ZONE
121	R-76-1.2M	R330	D2
122	R-88-4.99K	R331	D2
123	R-76-1.2M	R332	D2
124	R-76-1K	R333	D4
125	R-76-100	R334	D3
126	R-76-470	R335	D3
127	R-76-4.7K	R336	C3
128	"	R337	C3
129	R-76-5.6K	R338	B3
130	R-76-39	R339	B3
131	"	R340	B3
132	R-76-5.6K	R341	B3
133	R-76-1K	R342	B3
134	RP-97-10K	R343	B3
135	R-76-10K	R344	B3
136	R-76-470K	R345	B3
137	R-76-47K	R346	B3
138	R-76-15K	R347	B3
139	R-76-2.4K	R348	B3
140	R-88-10K	R349	B3
141	TF-103-2	R350	C3
142	R-76-10K	R351	D3
143	"	R352	D3
144	R-76-2.2M	R353	D4
145			
146			
147			
148			
149			
150	R-88-100K	R359	C4
151	R-76-1K	R360	C4
152			
153			
154	R-76-2.2K	R363	E4
155	R-76-24K	R364	E4
156	R-94-100K	R365	F4
157	"	R366	F4
158	R-88-10	R367	F4
159	R-88-13	R368	F4
160	R-1-22	R369	F4

ITEM	PART NO.	SCHEM. DESIG.	ZONE
161	R-1-22	R370	F5
162	R-76-2.2K	R371	E5
163	R-88-13	R372	F5
164	R-88-10	R373	F6
165	R-76-4.7K	R374	E5
166	R-263-5%1K	R375	D5
167	R-263-4.99K	R376	D5
168	R-88-20K	R377	C5
169			
170	R-264-485K	R379	C4
171	R-286-499	R380	C5
172	R-308-100	R381	C5
173			
174	R-88-3.57K	R383	D5
175	RP-97-1K	R387	C5
176	RP-97-10K	R386	C5
177	RP-97-500	R385	C5
178	RP-97-5K	R384	C5
179	R-76-100K	R388	D5
180	R-76-10K	R389	D5
181	"	R390	D5
182	"	R391	D5
183	RP-97-10K	R392	B3
184	R-763.9K	R393	D4
185			
186			
187			
188			
189	IC-251	U301	B1
190	"	U302	C1
191	"	U303	C1
192	IC-138	U304	D2
193	IC-102	U305	D2
194	IC-320	U306	C2
195	IC-246	U307	C2
196	IC-321	U308	C2
197	IC-246	U309	C2
198	IC-77	U310	C2
199	IC-323	U311	B2
200	IC-248	U312	B3

ITEM	PART NO.	SCHEM. DESIG.	ZONE
201	IC-219	U313	B3
202	IC-102	U314	C3
203	IC-77	U315	C3
204	IC-106	U316	D3
205	IC-219	U317	C3
206	IC-312	U318	C3
207	IC-165	U319	B3
208	IC-206	U320	C3
209			
210	SO-68	—	B2
211			
212			
213	IC-93	VR301	D5
214			
215	J-3	W301	B5
216			
217			
218	HS-22	2/UNIT	E3,E6
219			
220	MK-16	2/UNIT	E3,E6
221	MK-20	2/UNIT	E3,E6
222			
223			
224	CC-46-1	—	D6
225			
226			
227	24249A	TP-1	D5
228	"	TP-2	D5
229	"	TP-3	D5
230	"	J1009	C5
231	"	J1010	C5
232	"	J1011	C5
233	"	J1012	C5
234			
235			
236			
237			
238			
239			
240			

224	1
MODEL	NEXT ASSEMBLY / QTY

USED ON

DO NOT SCALE THIS DRAWING

DIMENSIONAL TOLERANCES UNLESS OTHERWISE SPECIFIED: XX ± .015, ANG ± 1°, XXX ± .005, FRAC ± 1/64, SURFACE MAX 63

DATE 12/14/83 | DRN B.K. | ENG APPR R.S. | SCALE ~ | MATERIAL | FINISH

Keithley Instruments Inc. Cleveland, Ohio 44139

TITLE COMPONENT LAYOUT, ANALOG BOARD

SIZE D | NO 224-120

FORM 29019 REV. C

Figure 6-4. Analog Board, Componet Location Drawing, Dwg. No. 224-120 (sheet 2 of 2)

911-022 ON

ZONE	LTR	ECO NO.	REVISION	DATE
	A	8187	RELEASED	11-4-82
	B	8913	ADDED JUMPER	1-28-83
	C	8966	CHG'D R208A-R208H FROM 62Ω TO 150Ω	2-18-83
	D	9179	ADDED PROVISIONS FOR JUMPER	6-15-83

NOTES:

1. ALL RESISTOR VALUES ARE IN OHMS UNLESS MARKED OTHERWISE. (K-KILOHMS)
2. ALL CAPACITOR VALUES ARE IN MICROFARADS.
3. ○ DENOTES FRONT PANEL CONTROL.
4. ▽ DENOTES DIGITAL COMMON.

DS201 DS202 DS203 DS204 DS205 DS206 DS207

PLUS minus

+/- S225

2 S221 3 S222 S223 0 S224

SINGLE S201 5 S218 6 S219 1 S220

(for 230) I-LIMIT (for 220) V-LIMIT S205 SOURCE S204 STEP S203 CONTINUOUS S202

START/STOP S209 RESET S208 MEMORY S207 DWELL TIME S206

EXPONENT S213 ENTER S212 COPY S211 OPERATE S210

4 S217 9 S216 8 S215 7 S214

U204A U204B U204C U201A U201F U201E U201D U201C U201B U202C U202B U202A U202F U202E U202D

DS210 "REMOTE"

"OPERATE" DS219 "LISTEN" DS209 "START/STOP" DS218

"SOURCE" DS214 (for 230) "I-LIMIT" (for 220) "V-LIMIT" DS215 "DWELL TIME" DS216 "MEMORY" DS217 "TALK" DS208 "SINGLE" DS211 "CONTINUOUS" DS212 "STEP" DS213

R201A 150 R201D 150 R201C 150 R201H 150 R201G 150 R201B 150 R201E 150 R201F 150

Q201 Q205 Q207 Q208 Q206 Q203 Q202 Q204

R202D 3.3K R202B 3.3K R202A 3.3K R202H 3.3K R202G 3.3K R202C 3.3K R202E 3.3K R202F 3.3K

U203 SHIFT REGISTER

DATA A, CLOCK, GND, V_{CC}, DATA B, CLEAR

C201 10+

+5V

P1002

S1 S2 S3 S4 PB5 CA2 DIGITAL COMMON +5V (dp) PA4 (g) PA7 (f) PA0 (e) PA6 (d) PA2 (c) PA1 (b) PA3 (a) PA5

HIGHEST SCHEMATIC DESIGNATIONS USED		
C201	DS219	Q208
R202	S225	U204
P1002		

SCHEMATIC DESIGNATIONS NOT USED			
J1002	P1001		

230		
220		
MODEL	NEXT ASSEMBLY USED ON	QTY.

DO NOT SCALE THIS DRAWING

Keithley Instruments Inc. Cleveland, Ohio 44139

DIMENSIONAL TOLERANCES UNLESS OTHERWISE SPECIFIED: XX = ± .015 ANG. = ±1° XXX = ± .005 FRAC. = ±1/64 SURFACE MAX. 63

DATE 12-1-81 DRN. BB CHK'D APPR. RWM SCALE NONE MATERIAL FINISH

TITLE SCHEMATIC PC-DISPLAY BOARD

SIZE D NO. 220-116

FORM 28511D REV. A

Figure 6-5. Display Board, Schematic Diagram, Dwg. No. 220-116

911-422 ON

ZONE	LTR	ECO NO	REVISION	DATE
	A	14547	RELEASED	4-17-91

NOTES:

1. ALL RESISTOR VALUES ARE IN OHMS UNLESS MARKED OTHERWISE. (K-KILOHMS)
2. ALL CAPACITOR VALUES ARE IN MICROFARADS.
3. ○ DENOTES FRONT PANEL CONTROL.
4. ▽ DENOTES DIGITAL COMMON.

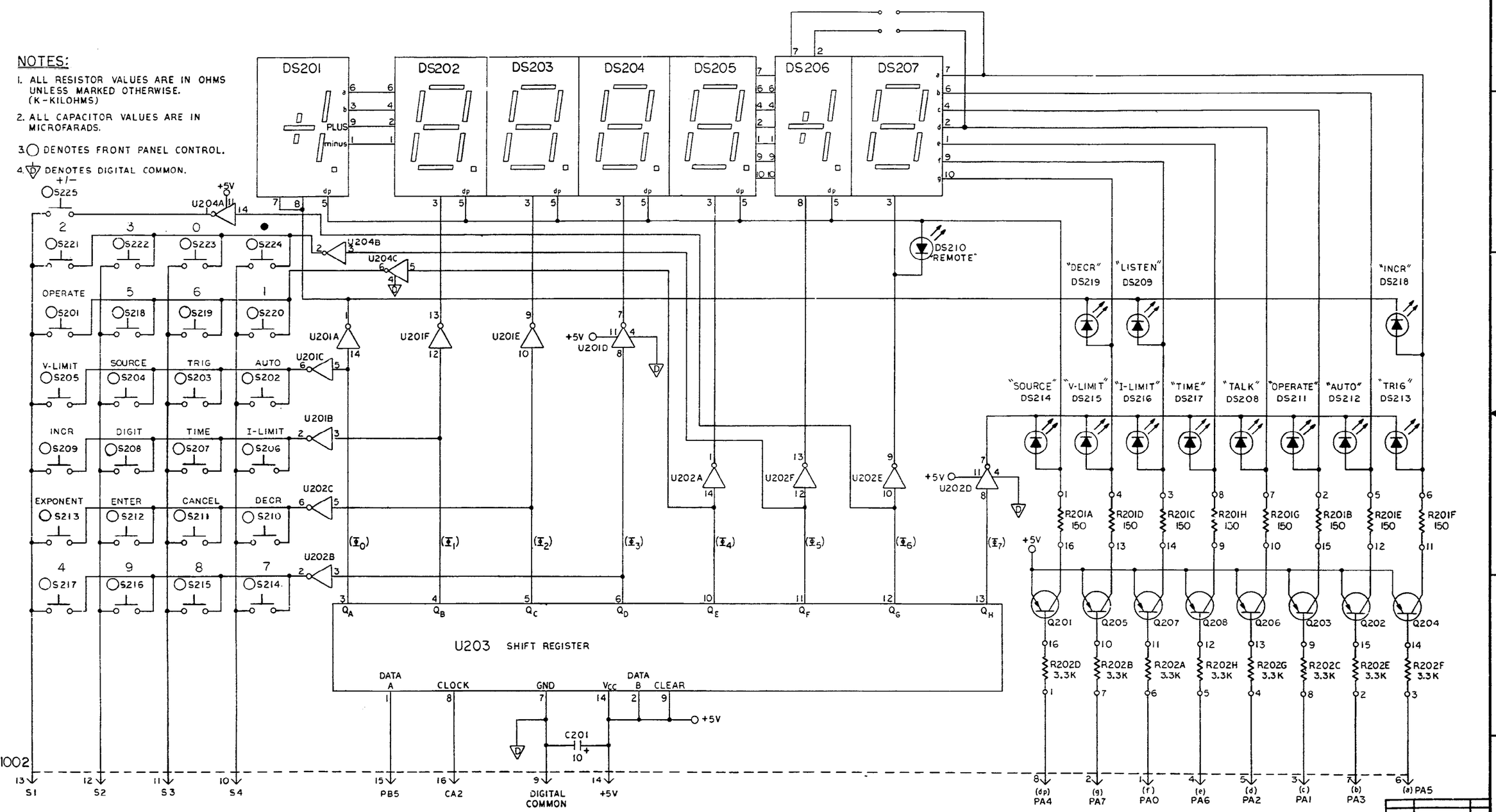

HIGHEST SCHEMATIC DESIGNATIONS USED		
C201	DS219	Q208
R202	S225	U204
P1002		

SCHEMATIC DESIGNATIONS NOT USED			
J1002	P1001		

MODEL	NEXT ASSEMBLY	QTY
224		

USED ON

DO NOT SCALE THIS DRAWING

KEITHLEY Keithley Instruments Inc. Cleveland, Ohio 44139

DIMENSIONAL TOLERANCES UNLESS OTHERWISE SPECIFIED
XX = ± .015 ANG = ± 1°
XXX = ± .005 FRAC = ± 1/64
SURFACE MAX 63

DATE 4-4-91 SCALE NONE
DRN AJS ENG APPR
MATERIAL
FINISH

TITLE SCHEMATIC PC-DISPLAY BOARD

SIZE D NO 224-116

FORM 28511D REVC

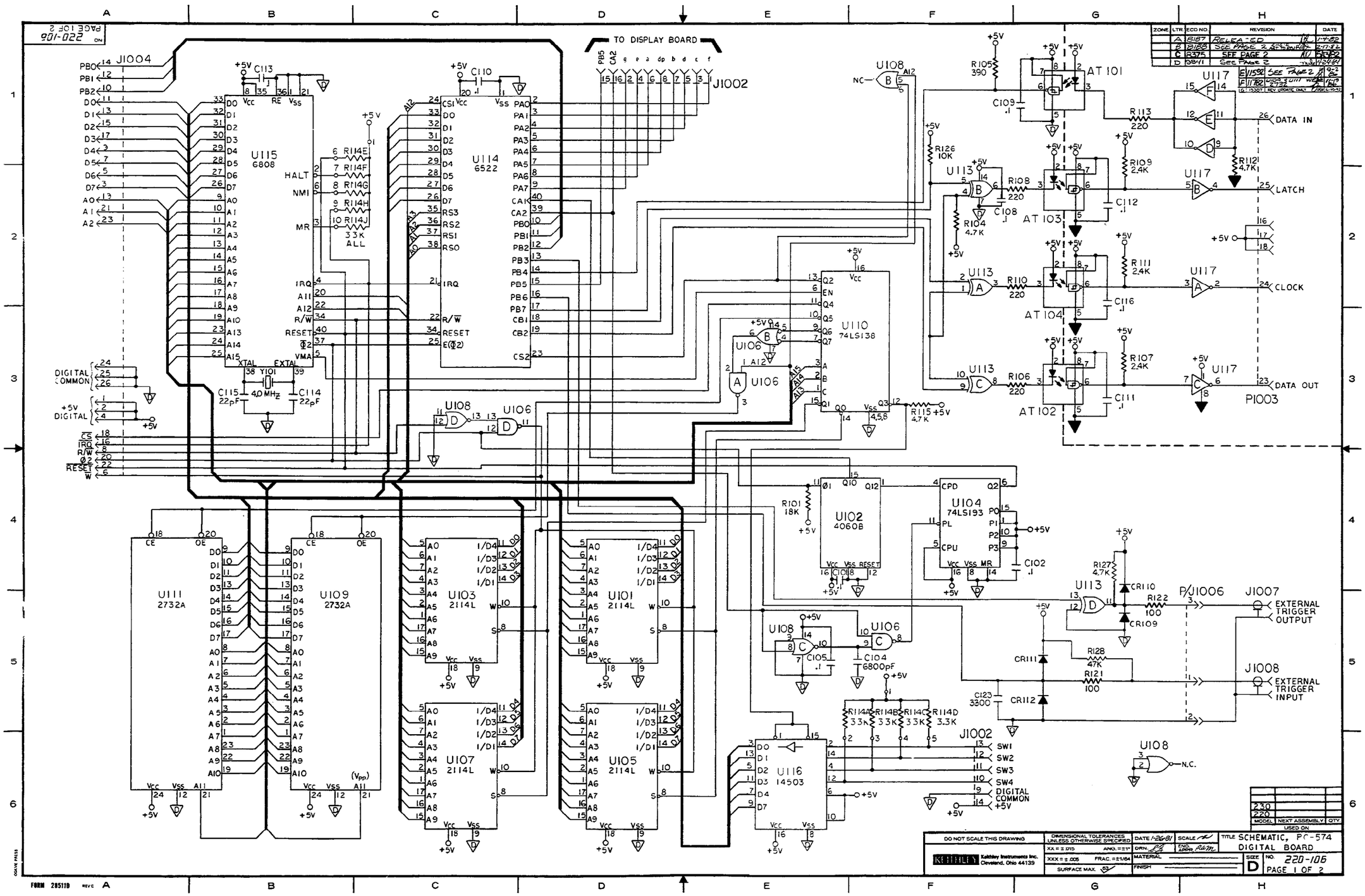

Figure 6-6. Mother Board, Schematic Diagram, Dwg. No. 220-106 (sheet 1 of 2)

ZONE	LTR	ECO NO	REVISION	DATE
	A	8187	RELEASED	1-4-82
	B	8188	F101 WAS .1/2A FOR 115V, 1/4A FOR 230V; ADDED F101: .8A FOR 90V, .4 FOR 180V. R105 WAS 4.7K; R117 R403, R118 WAS 390K; DELETED R120 43K; DELETED R123, R124 10K; DELETED Q101; DELETED U103; ADDED C123-350; ADDED R127-4.7K; R128-47K.	2-17-82
	C	8375	ON PAGE I - CHANGED CONNECTION FROM PIN 3 TO PIN I ON U102, CHANGED CONNECTION FROM PIN 7 TO PIN 6 ON U104, DELETED JUMPERS W101 + W102, CORRECTED PIN 8 CONNECTION ON U111 + U109 TO AO BUSS FROM DO BUSS. ON THIS PAGE - REPLACED (C107) C-314-11600 WITH C-342-10,000	5/13/82
	D	9841	DELETED U112 R125 R102	4-21-84
	E	11592	ADDED C124 (.1)	9-2-86
	F	11782	SEE PG. 1	11-19-86
	G	15307	REV. UPDATE ONLY	6-10-92

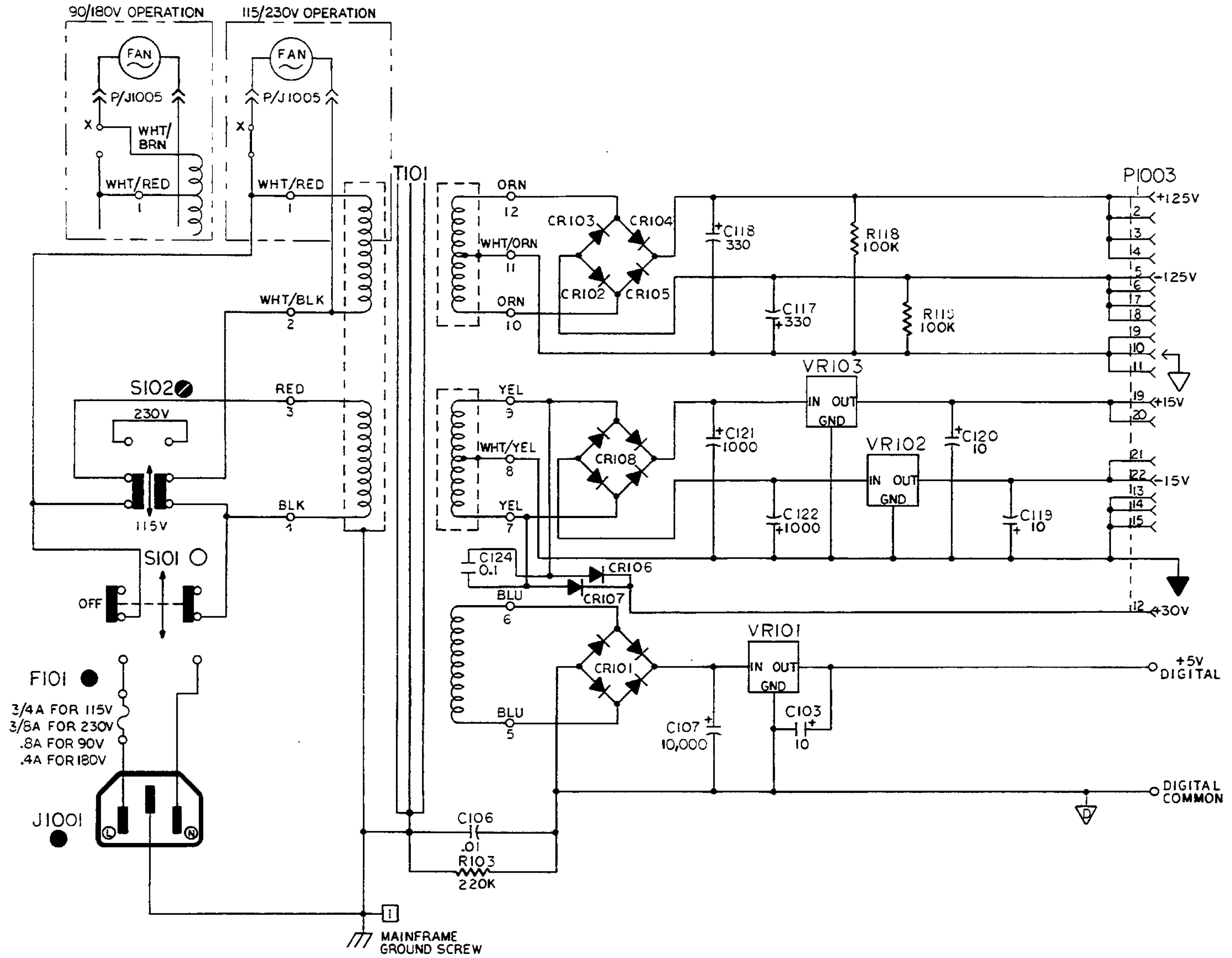

NOTES:

1. ALL RESISTOR VALUES ARE IN OHMS UNLESS OTHERWISE MARKED (K-KILOHMS, M-MEGOHMS).
2. ALL CAPACITOR VALUES ARE IN MICROFARADS UNLESS OTHERWISE MARKED (pF-PICOFARADS).
3. DENOTES DIGITAL COMMON.
4. DENOTES OUTPUT COMMON.
5. DENOTES GUARD.
6. ○ DENOTES FRONT PANEL CONTROL.
7. ● DENOTES REAR PANEL MOUNTING.
8. DENOTES INTERNAL ADJUST.
9. DENOTES CHASSIS CONNECTION.
10. T101 IS TR-187 CONNECT WHT/BRN WIRE TO X.

HIGHEST SCHEMATIC DESIGNATIONS USED			
C124	CR112	S102	R128
U117	J1008	T101	F101
P1006	AT104	Y101	W102
VR103			

SCHEMATIC DESIGNATIONS NOT USED			
J1003	P1001	P1002	R116
R117	P1004	P1007	P1008
R120	R123	R124	R125
R102	U112		

MODEL	NEXT ASSEMBLY	QTY
230		
220		

DO NOT SCALE THIS DRAWING

DIMENSIONAL TOLERANCES UNLESS OTHERWISE SPECIFIED: XX = ± .015; XXX = ± .005; ANG. = ±1°; FRAC = ±1/64; SURFACE MAX

DATE 1-21-81 | SCALE | DRN | ENG APPR

MATERIAL | FINISH

KEITHLEY Keithley Instruments Inc. Cleveland, Ohio 44139

TITLE SCHEMATIC, FC-574 POWER SUPPLY

SIZE D | NO. 220-106 | PAGE 2 OF 2

220-106 PAGE 2 OF 2

FORM 28511D REV C

Figure 6-6. Mother Board, Schematic Diagram, Dwg. No. 220-106 (sheet 2 of 2)

NO 224-126

ZONE	LTR	ECO NO.	REVISION	DATE
	A	38411	RELEASED	4/24/89

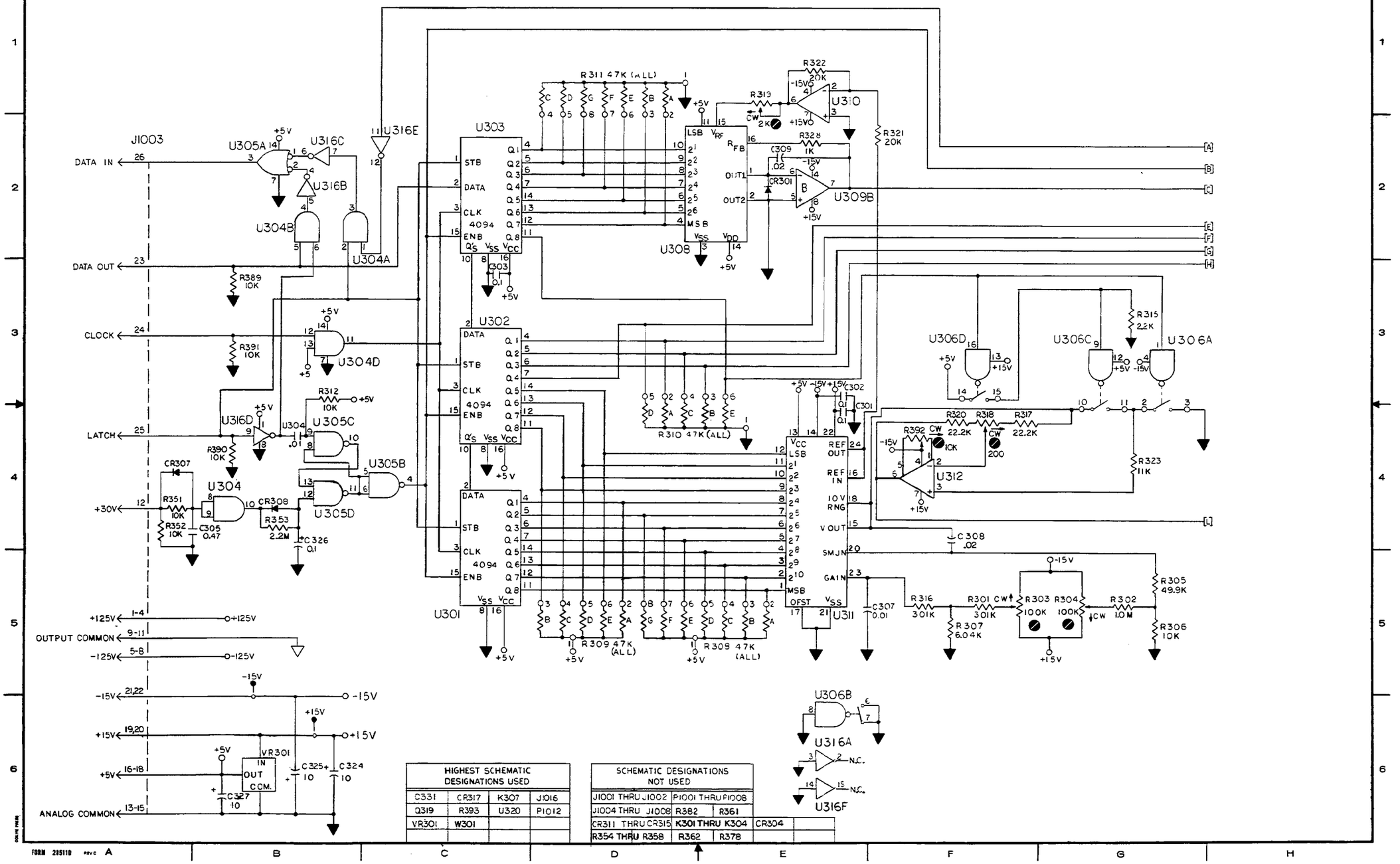

HIGHEST SCHEMATIC DESIGNATIONS USED			
C331	CR317	K307	J1016
Q319	R393	U320	P1012
VR301	W301		

SCHEMATIC DESIGNATIONS NOT USED				
J1001 THRU J1002	P1001 THRU P1008			
J1004 THRU J1008	R382	R361		
CR311 THRU CR315	K301 THRU K304	CR304		
R354 THRU R358	R362	R378		

Figure 6-7. Analog Board, Schematic Diagram, Dwg. No. 224-126 (sheet 1 of 2)

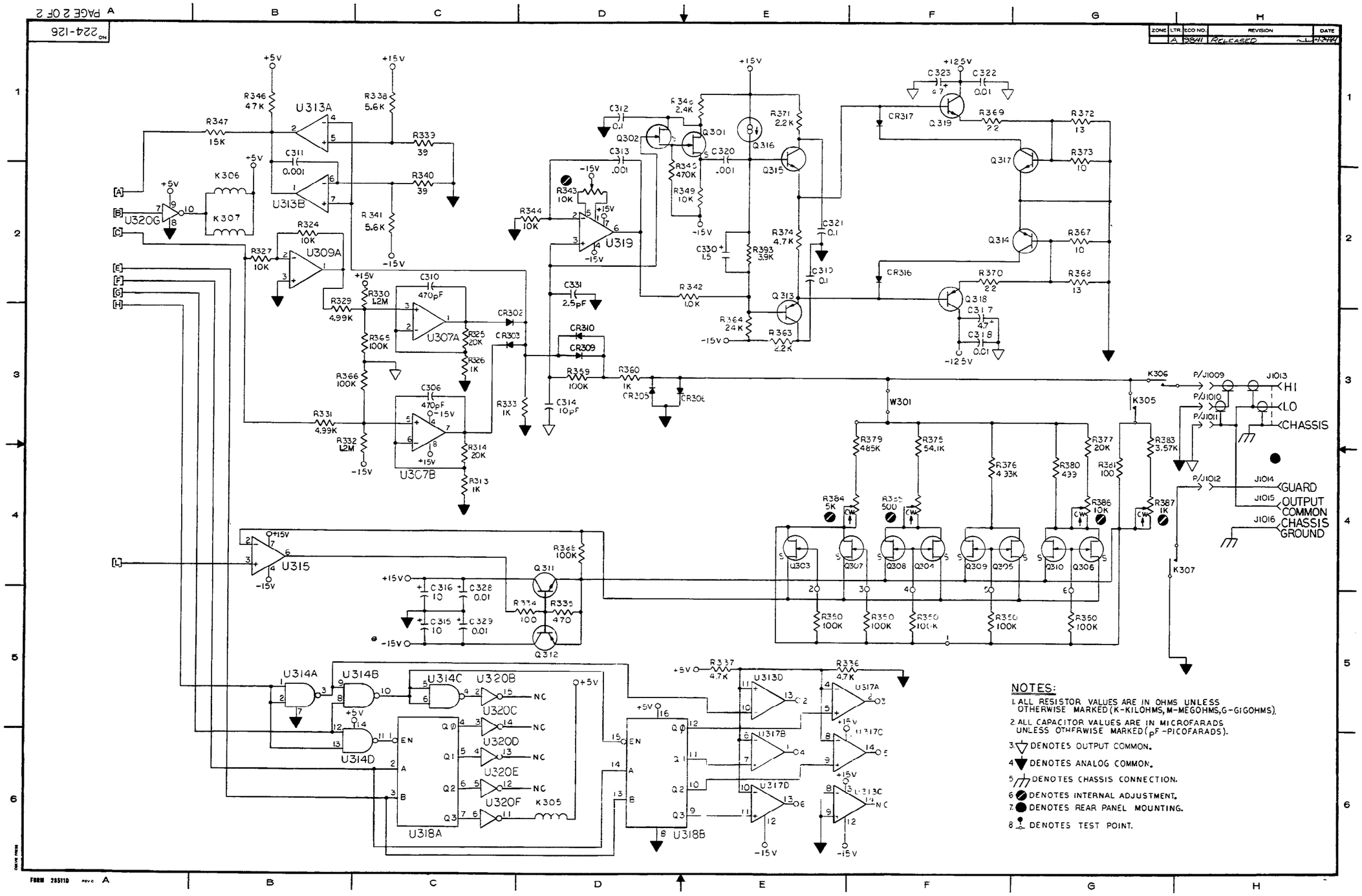

Figure 6-7. Analog Board, Schematic Diagram, Dwg. No. 224-126 (sheet 2 of 2)

KEITHLEY

Service Form

Model No. _____ **Serial No.** _____ **Date** _____

Name and Telephone No. _____

Company _____

List all control settings, describe problem and check boxes that apply to problem. _____

_____

_____

- ❑ Intermittent
- ❑ IEEE failure
- ❑ Front panel operational
- ❑ Analog output follows display
- ❑ Obvious problem on power-up
- ❑ All ranges or functions are bad
- ❑ Particular range or function bad; specify _____
- ❑ Batteries and fuses are OK
- ❑ Checked all cables

Display or output (check one)

- ❑ Drifts
- ❑ Unstable
- ❑ Overload
- ❑ Unable to zero
- ❑ Will not read applied input

- ❑ Calibration only
- ❑ Data required
- ❑ Certificate of calibration required

(attach any additional sheets as necessary)

Show a block diagram of your measurement system including all instruments connected (whether power is turned on or not). Also, describe signal source.

Where is the measurement being performed? (factory, controlled laboratory, out-of-doors, etc.)

_____

_____

What power line voltage is used? _____ Ambient temperature? _____ °F

Relative humidity? _____ Other? _____

Any additional information. (If special modifications have been made by the user, please describe.)

_____

_____

Be sure to include your name and phone number on this service form.

KEITHLEY

FREE PRODUCT/UPGRADE INFORMATION

To receive future information on product upgrades and enhancements, complete this card and mail, or FAX to 440/248-6168.

MODEL _____ SERIAL NO. _____ DATE _____

NAME _____ TITLE _____

COMPANY _____ MAIL STOP _____

ADDRESS _____

CITY _____ STATE/PROVINCE _____ ZIP _____ COUNTRY _____

PHONE _____ FAX _____

E-MAIL _____

For FREE additional information, check below:

Application Notes
- ☐ General Purpose Measurements
- ☐ Component Test Applications

Reference Publications
- ☐ Low Level Handbook
- ☐ Switching Handbook

Catalogs
- ☐ Full Line Product Catalog

Facility (Check One)
- ☐ K Aerospace/Defense
- ☐ S Automotive/Parts Mfg.
- ☐ Q Chemical/Petroleum Processing
- ☐ H Components Mfg. (Non-Semi)
- ☐ N Computer/Peripherals
- ☐ T Consumer Electronics
- ☐ L Digital ICs
- ☐ U Discrete Components
- ☐ D Displays
- ☐ V Distributors/Resellers/Rental
- ☐ F Education/University
- ☐ B Industrial Controls Mfg.
- ☐ R Medical Equip. and Services
- ☐ Y Mixed-Signal Components
- ☐ Z Other Discrete Manufacturing
- ☐ O Optoelectronic Components
- ☐ I Process Control Industries
- ☐ C Regulatory
- ☐ E Research Laboratories
- ☐ J Semi. Components - Other
- ☐ 1 Semiconductor Mfg.
- ☐ 2 Semi. Pkg. Part Testing
- ☐ P Telecommunications Equip.
- ☐ G Test/Measurement Equipment Mfg.
- ☐ M Utility
- ☐ 4 VAR/System Integrator/Consultant
- ☐ X Other _____

Job Function (Check One)
- ☐ 4 Calibration/Metrology
- ☐ 6 Component Test
- ☐ C Consulting
- ☐ G Corp./General Mgmt.
- ☐ 7 Education
- ☐ 3 Engineering Design
- ☐ 1 Engineering Management
- ☐ 5 Mfg. Production Test
- ☐ 0 Purchasing
- ☐ 8 Quality Assurance/Control
- ☐ 2 Research & Development
- ☐ S Safety Manager
- ☐ 9 Service/Repair
- ☐ E System Engineering/Integration
- ☐ T Test Technician
- ☐ X Other _____

Product Interest(s)
- ☐ M Acculex Digital Displays
- ☐ G Communications Test
- ☐ 7 Current/Voltage Source
- ☐ V C-V Measurements
- ☐ D Data Aquisition Boards
- ☐ R Data Acq. Test & Analysis Software
- ☐ 2 Digital Multimeters
- ☐ L Distributed I/O
- ☐ 4 Electrometers/Picoammeters
- ☐ A Flat Panel Display Test
- ☐ F Function Generators
- ☐ 3 High Resistance Meters
- ☐ E IEEE Interfaces
- ☐ I I-V Characterization
- ☐ N LCZ Meters
- ☐ 5 Nanovoltmeters
- ☐ B Network Measurement Modules
- ☐ 6 Ohmmeters
- ☐ P PC Instruments
- ☐ K Portable Products
- ☐ 8 Precision Power Supplies
- ☐ T Semiconductor Parametric Test
- ☐ H Serial Communication Interfaces
- ☐ J Signal Conditioning Products
- ☐ U Source/Measure Instruments
- ☐ S Switching Systems/Scanners
- ☐ 0 Temperature Measurements
- ☐ W Wafer Level Reliability
- ☐ X Other _____

KEITHLEY INSTRUMENTS INC
PO BOX 391260
CLEVELAND OH 44139-9653

POSTAGE WILL BE PAID BY ADDRESSEE

BUSINESS REPLY MAIL
FIRST-CLASS MAIL PERMIT NO. 11759 CLEVELAND OH

NO POSTAGE
NECESSARY
IF MAILED
IN THE
UNITED STATES

1. What other Keithley products do you currently use?

2. What effects, devices or phenomena do you measure with this instrument?

3. What was the main reason a *Keithley* unit was purchased?

4. Do you have any design suggestions concerning this unit?

PLEASE REFOLD SO YOUR NAME IS INSIDE, TAPE AND MAIL.

KEITHLEY 224 PROGRAMMABLE CURRENT SOURCE

FRONT PANEL OPERATION

DISPLAY MODIFY

DIGIT

Selects a display digit for modification in the source mode. Pressing the DIGIT button after it is enabled moves the digit to be modified to the right by one digit. DIGIT must be enabled in order for AUTO, TRIG,INCR and DECR to operate.

INCR

Increments the displayed value, starting at the selected digit, by one count. In the manual mode, the display digit is incremented by one count each time the INCR button is pressed. In the auto mode, the displayed value, starting at the selected digit, is incremented at the programmed time rate. Auto increment continues until AUTO or CANCEL button is pressed, the programmed HI I-limit or positive overrange is reached.

DECR

Decrements the displayed value, starting at the selected digit, by one count. In the manual mode, the display digit is decremented by one count each time the DECR button is pressed. In the auto mode, the displayed value, starting at the selected digit, is decremented at the programmed time rate. Auto decrement continues until the AUTO or CANCEL button is pressed, the programmed LO I-limit or negative overrange is reached.

DISPLAY

SOURCE

Displays programmed current source value and allows source to be programmed with DATA and DATA ENTRY buttons. (Limits: 0 to ± 101.00mA).

V-LIMIT

Displays programmed voltage compliance and allows limit to be programmed with DATA and DATA ENTRY buttons (Limits: 1 to 105V). V-LIMIT LED flashes when over compliance.

I-LIMIT

Displays programmed HI and LO current source limits and allows them to be programmed with DATA and DATA ENTRY buttons (Limits: LO = -101.00E-3A HI = 101E-3A).

TIME

Displays programmed time and allows time to be programmed with DATA and DATA ENTRY buttons (Limits: 50.00msec to 999.9sec.).

OUTPUT

OPERATE

Turns on source output (output at terminals is programmed to 0.000E-6A unless OPERATE LED is on).

DATA ENTRY

CANCEL

Momentarily blanks display and terminates the data modifying operation. The current display value remains as is. The TRIG,AUTO,INCR and DECR functions are turned off.

ENTER

Enters displayed source, V-limit, time, I-limit values into unit memory.

EXPONENT

Allows entry of exponent information with DATA buttons. Not operational with display in V-limit mode.

DATA

Allows entry of numeric data for source, V-limit, time, and I-limit. Only present display mode is affected by data input. The + / — button affects sign of mantissa only in source, I-limit and sign of exponent in time mode. ENTER button must be pressed after desired value is displayed.

CONTROL

AUTO

Selects the auto function for INCR/DECR of the source data. Digit must be selected before auto is enabled. Time is the rate of INCR/DECR.

TRIG

Selects trigger function for rear panel external trigger input. Upon receiving proper external trigger pulse the Model 224 INCR/DECR the displayed source value.

CONDENSED SPECIFICATIONS

Range	Maximum Output	Accuracy (1 Year) ±(%rdg + offset) 18° -28°C	Step Size
100mA	±101.00mA	0.1 + 50μA	50μA
10mA	±19.995mA	0.05 + 10μA	5μA
1mA	±1.9995mA	0.05 + 1μA	500nA
100 μA	±199.95 μA	0.05 + 100nA	50nA
10 μA	±19.995 μA	0.05 + 10nA	5nA

OUTPUT RESISTANCE: Greater than $10^{12}\Omega$.
OUTPUT CAPACITANCE: Less than 20pF.
VOLTAGE LIMIT: Bipolar, 1 to 105V in 1V programmable steps.
RESPONSE TIME: Less than 3msec to within 0.1% of programmed change.
TRANSIENT RECOVERY TIME: Less than 3msec to rated accuracy following any change in compliance voltage.
GUARD OUTPUT:
Maximum Load Capacitance: 10nF.
Maximum Load Current: Absolute total (Output + Guard) not to exceed 105mA.
Accuracy: ±1mV (excluding output lead voltage drop).
INCREMENT/DECREMENT: Automatic, manual or trigger modes.
Range of Dwell Times: 50msec to 999.9sec.
Accuracy of Dwell Time: ±(0.05 + 20μsec).
Step Size: Selected digit on a fixed range. Minimum step size 0.1% of range.
Current Limit: Maximum is ±(Full Scale) on range selected.
OUTPUT LOAD: Output load must be non-inductive.

WARNING

1. **Before operation, ground the instrument through a properly earth grounded power receptacle.**
2. **Before servicing, disconnect the instrument from the power line and all other equipment. Consult the Model 224 Instruction Manual.**
3. **Do not touch the rear panel terminals while the instrument is turned on or connected to any other test equipment. Common mode voltage and programmed output current may be present.**

IEEE-488 PROGRAMMING (with 2243 option)

DISPLAY

D0 = Source
D1 = Voltage Limit
D2 = Dwell Time

FUNCTION

F0 = Standby
1. Set output current to zero on 20μA range.
2. Reduce voltage limit to less than 32V.

F1 = Operate
Set output to value programmed.

PREFIX (NDCI, V, W)

G0 = Source, compliance and time with prefix is transmitted.
NDCI + n.nnnnE + n, V + n.nn00E + n, W + n.nnnnE + n

G1 = Source, compliance and time without prefix is transmitted.
+ n.nnnnE + n, + n.nn00E + n, + n.nnnnE + n
NDCI + n.nnnnE + n for current
V + n.nn00E + n for voltage limit
W + n.nnnnE + n for time
"N" is replaced with "O" if over compliance condition exists.

STATUS WORD

G0 status word with model number prefix transmitted: 22400000000:
G1 status word without model number prefix transmitted: 00000000:

I/O STATUS

G0 I/O status with prefix transmitted:
I/Oii,oo
G1 I/O status without prefix transmitted:
ii,oo
where i is the input from 0 to 15
where o is the output from 0 to 15

EOI

K0 = EOI transmitted on last byte out.
K1 = EOI is not transmitted.

SRQ

Mnn: nn = 0 to 31 base 10, or 00000 to 11111 base 2.
0 = bit disabled
1 = bit enabled
Bits: SRQ mask
MSB7: N/A
6: N/A
5: N/A
4: Input Port Change
3: End of Time
2: I-Limit Reached
1: Over Voltage Limit
0: IDDC, IDDCO, or -REN (No Remote)

SRQ BYTE

BIT	DATA	ERROR
MSB7	N/A	N/A
6	SRQ	SRQ
5	Data = 0	Error = 1
4	N/A	N/A
3	Input Port Change	N/A
2	End of Time	-REN (No Remote)
1	I-Limit Reached	IDDCO
0	Over Voltage Limit	IDDC

RANGES

R0 = Auto Range (Force Most Significant Number)
R5 = Full scale: 20 μA 2.0E-5
R6 = Full scale: 200 μA 2.0E-4
R7 = Full scale: 2mA 2.0E-3
R8 = Full scale: 20mA 2.0E-2
R9 = Full scale: 1.01mA 1.01E-1

IEEE TERMINATOR CHARACTER

Yc = The (ASCII) byte contains an ASCII character which will be used as the terminator for all data until changed. The power up default is (CR) (LF). [NOTE: ASCII (DEL) indicates no terminator, ASCII (LF) indicates (CR) (LF), and ASCII (CR) indicates (LF) (CR).]
Terminators not allowed: All capital letters; all numbers; (blank); + - / , . e

INPUTS

I(sign)n.nnnnE(sign)nn
Current Source Output Value
Limits: 0 to ±101.00mA
V(sign)n.nnnnE(sign)nn
Voltage Limit
Limits: 1 to 105V
W(sign)n.nnnnE(sign)nn
Time
Limits: 50.00msec to 999.9sec (1msec steps)

I/O PORT

0n.nnnnEnn
Set control bits on "X"
n = 0 to 16 base 10 or
0000 to 1111 base 2
if 0 then bit low
if 1 then bit high

OUTPUT STATUS STRING ON TALK

U0 = Output status word on next read.
Format: 2 2 4 D F G J K R M Y
Default: 2 2 4 0 0 0 0 0 0 0 0 :
U1 = Output I/O status on next read.
Read input on X only.
I/Oii,oo = I/O status.
where i is the input from 0 to 15
where o is the output from 0 to 15

PRIMARY ADDRESS DIP SWITCH CONFIGURATION

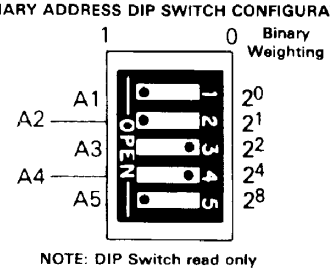

NOTE: DIP Switch read only upon power up.

Specifications are subject to change without notice.

All Keithley trademarks and trade names are the property of Keithley Instruments, Inc. All other trademarks and trade names are the property of their respective companies.

KEITHLEY

Keithley Instruments, Inc. 28775 Aurora Road • Cleveland, Ohio 44139 • 440-248-0400 • Fax: 440-248-6168
1-888-KEITHLEY (534-8453) www.keithley.com

BELGIUM:	**Keithley Instruments B.V.**	Bergensesteenweg 709 • B-1600 Sint-Pieters-Leeuw • 02/363 00 40 • Fax: 02/363 00 64
CHINA:	**Keithley Instruments China**	Yuan Chen Xin Building, Room 705 • 12 Yumin Road, Dewai, Madian • Beijing 100029 • 8610-6202-2886 • Fax: 8610-6202-2892
FRANCE:	**Keithley Instruments Sarl**	3, allée des Garays • 91127 Palaiseau Cédex • 01 64 53 20 20 • Fax: 01 60 11 77 26
GERMANY:	**Keithley Instruments GmbH**	Landsberger Strasse 65 • D-82110 Germering • 089/84 93 07-40 • Fax: 089/84 93 07-34
GREAT BRITAIN:	**Keithley Instruments Ltd.**	The Minster • 58 Portman Road • Reading, Berkshire RG30 1EA • 0118-9 57 56 66 • Fax: 0118-9 59 64 69
INDIA:	**Keithley Instruments GmbH**	Flat 2B, WILLOCRISSA • 14, Rest House Crescent • Bangalore 560 001 • 91-80-509-1320/21 • Fax: 91-80-509-1322
ITALY:	**Keithley Instruments s.r.l.**	Viale San Gimignano, 38 • 20146 Milano • 02-48 39 16 01 • Fax: 02-48 30 22 74
KOREA:	**Keithley Instruments Korea**	2FL., URI Building • 2-14 Yangjae-Dong • Seocho-Gu, Seoul 137-130 • 82-2-574-7778 • Fax: 82-2-574-7838
NETHERLANDS:	**Keithley Instruments B.V.**	Postbus 559 • NL-4200 AN Gorinchem • 0183-635333 • Fax: 0183-630821
SWITZERLAND:	**Keithley Instruments SA**	Kriesbachstrasse 4 • 8600 Dübendorf • 01-821 94 44 • Fax: 01-820 30 81
TAIWAN:	**Keithley Instruments Taiwan**	1FL., 85 Po Ai Street • Hsinchu, Taiwan, R.O.C. • 886-3-572-9077• Fax: 886-3-572-9031

© Copyright 2000 Keithley Instruments, Inc.
Printed in the U.S.A.

No. 2193
2/2000