Advanced Test Equipment Rentals
www.atecorp.com 800-404-ATEC (2832)
Established 1981

Agilent 16338A Test Lead Set

Operation and Service Manual

SERIAL NUMBERS

This manual provides information on operation and service for the 16005B, C, D Kelvin Clip Leads, 16006A Pin-type Leads, 16007A, B Alligator Clip Leads, and 16143B Mating Cable.

Agilent Technologies

Agilent Part No. 16338-90000
Printed in JAPAN January 2000

Fourth Edition

Notice

The information contained in this document is subject to change without notice.

This document contains proprietary information which is protected by copyright. All rights are reserved. No part of this document may be photocopied, reproduced, or translated to another language without the prior written consent of the Agilent Technologies.

Agilent Technologies Japan, Ltd.
Component Test PGU-Kobe
1-3-2, Murotani, Nishi-ku, Kobe-shi,
Hyogo, 651-2241 Japan

Warranty

This Agilent Technologies instrument product is warranted against defects in material and workmanship for a period of one year from the date of shipment, except that in the case of certain components listed in this manual, the warranty shall be for the specified period. During the warranty period, Agilent Technologies will, at its option, either repair or replace products which prove to be defective.

For warranty service or repair, this product must be returned to a service facility designed by Agilent Technologies. The Buyer shall prepay shipping charges to Agilent Technologies and Agilent Technologies shall pay shipping charges to return the product to the Buyer. However, the Buyer shall pay all shipping charges, duties, and taxes for products returned to Agilent Technologies from another country.

Agilent Technologies warrants that its software and firmware designed by Agilent Technologies for use with an instrument will execute its programming instruction when property installed on that instrument. Agilent Technologies does not warrant that the operation of the instrument, or software, or firmware will be uninterrupted or error free.

Limitation of Warranty

The foregoing warranty shall not apply to defects resulting from improper or inadequate maintenance by the Buyer, Buyer-supplied software or interfacing, unauthorized modification or misuse, operation outside of the environmental specifications for the product, or improper site preparation or maintenance.

No other warranty is expressed or implied. Agilent Technologies specifically disclaims the implied warranties of merchantability and fitness for a particular purpose.

Certification

The Agilent Technologies certifies that this product met its published specifications at the time of shipment from the factory. Agilent Technologies further certifies that its calibration measurements are traceable to the United States National Institute of Standards and Technology, to the extent allowed by the Institute's calibration facility, or to the calibration facilities of other International Standards Organization members.

Exclusive Remedies

The remedies provided herein are the buyer's sole and exclusive remedies. Agilent Technologies shall not be liable for any direct, indirect, special, incidental, or consequential damages, whether based on contract, tort, or any other legal theory.

Assistance

Product maintenance agreements and other customer assistance agreements are available for Agilent Technologies products.

If you need assistance, contact your nearest Agilent Technologies Sales and Service Office. Addresses are provided at the back of this manual.

© Copyright 1997,1998,1999,2000 Agilent Technologies Japan, Ltd.

Manual Printing History

The manual printing date and part number indicate its current edition. The printing date changes when a new edition is printed. (Minor corrections and updates which are incorporated at reprint do not cause the date to change.) The manual part number changes when extensive technical changes are incorporated.

November 1991 ..... First Edition (part number: 16338-90000)

June 1992 ..... Second Edition (part number: 16338-90000)

February 1999 ..... Third Edition (part number: 16338-90000)

January 2000 ..... Fourth Edition (part number: 16338-90000)

Safety Summary

The following general safety precautions must be observed during all phases of operation, service, and repair of this instrument. Failure to comply with these precautions or with specific *WARNINGS* given elsewhere in this manual violates safety standards of design, manufacture, and intended use of the instrument.

The Agilent Technologies assumes no liability for the customer's failure to comply with these requirements.

Do NOT operate in an Explosive Atmosphere

Do *not* operate the instrument in the presence of flammable gasses or fumes. Operation of any electrical instrument in such an environment constitutes a safety hazard.

Keep Away from Live Circuits

Operating personnel must not remove instrument covers. Component replacement and internal adjustments must be made only by qualified maintenance personnel. Do not replace components with the power cable connected. Under certain conditions, dangerous voltages may exist even with the power cable removed. To avoid injury, always disconnect power and discharge circuits before touching them.

Do NOT Service or Adjust While Alone

Do *not* attempt internal service or adjustment unless another person, capable of turning off power and capable of rendering first aid and resuscitation, is present.

Do NOT Substitute Parts or Modify Instrument

Because of the danger of introducing additional hazards, do *not* substitute parts or perform unauthorized modifications to the instrument. Return the instrument to a Agilent Technologies Sales and Service Office for service and repair to ensure the safety features are maintained.

Dangerous Procedure Warnings

Warnings, such as the example below, precede *POTENTIALLY DANGEROUS PROCEDURES* throughout this manual. Instructions contained in the **warnings** must be followed.

Warning **Dangerous voltages, capable of causing death, are present in this instrument. Use extreme caution when handling, testing, and adjusting this instrument.**

Safety Symbols

General definitions of safety symbols used on equipment or in manuals.

Instruction manual symbol: the product will be marked with this symbol when it is necessary for the user to refer to the instruction manual in order to protect against damage to the instrument.

Indicates dangerous voltage (terminals fed from the interior by voltage exceeding 1000 volts must be so marked).

OR

Protective ground terminal. For protection against electrical shock in case of a fault in the instrument. Used with wiring terminals to indicate the terminal which must be connected to ground before operating equipment.

Low-noise or noiseless, clean ground (earth) terminal. Used for a signal common, as well as providing protection against electrical shock in case of a fault in the instrument. A terminal marked with this symbol must be connected to ground in the manner described in the installation (Operation) manual, and before operating the equipment.

OR

Frame or chassis terminal. A connection to the frame (chassis) of the equipment which normally includes all exposed metal structures.

Alternating current (power line).

Direct current (power line).

Alternating or direct current (power line).

Warning

Warning denotes a hazard. It calls attention to a procedure, practice, condition or the like, which, if not correctly performed or adhered to, could result in *injury* or *death* to personnel.

Caution

Caution sign denotes a hazard. It calls attention to a procedure, practice, condition or the like, which, if not correctly performed or adhered to, could result *damage* to or *destruction* of part or all of the product.

Note

Note denotes important information. It calls attention to a procedure, practice, condition or the like, which is essential to highlight.

Contents

1. General Information

Introduction 1-1
Using the 16338A 1-1
Product Description 1-1
16338A Test Lead Set 1-1
16005B, C, D Kelvin Clip Leads 1-1
16006A Pin-type Leads 1-2
16007A, B Alligator Clip Leads 1-2
16143B Mating Cable 1-2
Operating and Safety Precautions 1-2
Operating 1-2
Service 1-2
Specifications 1-3
Common Specifications for the 16005B, C, D, 16006A, 16007A, B, and 16143B . 1-3
Specifications of the 16005B 1-3
Specifications of the 16005C, D 1-3
Specifications of the 16006A 1-3
Specifications of the 16007A, B 1-3
Specifications for the 16143B 1-3
Supplemental Performance Characteristics 1-4
Supplemental Performance Characteristics of the 16007A, B 1-4
Supplemental Performance Characteristics of the 16005B 1-4
Supplemental Performance Characteristics of the 16005C, D 1-4
Supplemental Performance Characteristics of the 16143B 1-4

2. Preparation for Use

Introduction 2-1
Initial Inspection 2-1
Ambient Environmental Considerations 2-3
Operating and Storage 2-3
Connecting The Test Leads For Use 2-4
Configuration of Test Leads with Milliohmmeters 2-4
Connecting with 16143B to 4338A 2-5
Connecting the Test leads to 16143A, B 2-6
Repackaging the Test Leads 2-6

3. Operation
Introduction 3-1
SHORT Correction 3-2
For 4338A 3-3
For 4328A 3-3
Shorting Bar 3-3

4. Service
Introduction 4-1
16338A Replaceable Parts 4-1
16143B Replaceable Parts 4-2
16005B Replaceable Parts 4-2
16005C Replaceable Parts 4-3
16005D Replaceable Parts 4-4
16006A Replaceable Parts 4-5
16007A Replaceable Parts 4-5
16007B Replaceable Parts 4-5

Figures

2-1. 16338A Product Overview 2-2
2-2. Configuration of Test Leads and Milliohm Meters 2-4
2-3. Connecting 16143B to 4338A 2-5
2-4. Connecting Test leads to 16143A, B 2-6
3-1. Test Leads Features 3-1
3-2. Making a Shorting Connection for the 16005B, C, D 3-2
3-3. Making a Shorting Connection for the 16007A, B 3-2
4-1. Kelvin Clip Connections 4-3
4-2. Kelvin Clip Connections 4-4

Tables

2-1. Contents of 16338A 2-3
4-1. 16338A Replaceable Parts 4-1
4-2. Replaceable Parts 4-2
4-3. 16005B Replaceable Parts 4-2
4-4. 16005C Replaceable Parts 4-3
4-5. 16005D Replaceable Parts 4-4
4-6. 16006A Replaceable Parts 4-5
4-7. 16007A Replaceable Parts 4-5
4-8. 16007B Replaceable Parts 4-5

1

General Information

Introduction

The purpose of this manual is to enable you to use your 16338A Test Lead Set efficiently and confidently. This manual contains both general and specific information. To use the 16338A to perform a specific function (without having to read the entire manual), follow the directions in "Using the 16338A".

Using the 16338A

The 16338A has been designed to operate specifically with the 4338A Milliohmmeter.

- To install the 16338A (16005B, C, D 16006A, 16007A, B, and 16143B), turn to Chapter 2.
- To operate the 16338A (16005B, C, D 16006A, 16007A, B, and 16143B), turn to Chapter 3.
- To order replaceable parts for the 16338A (16005B, C, D 16006A, 16007A, B, and 16143B), turn to Chapter 4.

Product Description

16338A Test Lead Set

The 16338A contains four types of test leads and a mating cable, which are designed to operate specifically with the 4338A. These test leads can be mixed or matched depending on the type of sample being tested.

16005B, C, D Kelvin Clip Leads

These test leads are useful when measuring test devices that have thin electrode conductors (leads). The 16005B, C, D incorporates the four-terminal (Kelvin) connection method for best low resistance measurement accuracy. The Jaws of the 16005B, C, D are a set of electrically independent contacts; the current terminal which feeds the test current to the DUT and its contact design assures accurate measurement down to the lowest resistance range through its very low contact resistance.

16006A Pin-type Leads

The 16006A's probe tip is a voltage terminal and the outer conductor is a current terminal. The probe tip is spring-loaded, so that both terminals firmly contact the sample under test. This probe is useful for press-on contact measurements such as printed board conductivity measurements.

16007A, B Alligator Clip Leads

The 16007A, B are provided for standard four-terminal measurements. Each pair of test leads has a separate alligator clip voltage and current terminal. The 16007A is furnished with red covers and the 16007B is furnished with black covers.

16143B Mating Cable

The 16143B has been designed to operate specifically with the 4338A. The 16143B used to connect between the 4338A and test leads furnished the 16338A.

Operating and Safety Precautions

Operating

You need observe only normal precautions in handling and operating the 16338A. Do not exceed the operating input power level and signal type appropriate to the instrument being used, refer to your instrument's operation manual.

Caution

Electrostatic discharge (ESD) can damage the highly sensitive microcircuits in your instrument. ESD damage is most likely to occur as the test leads are being connected or disconnected. Protect them from ESD damage by wearing a grounding strap that provides a high resistance path to ground. Alternatively, ground yourself to discharge any static charge build-up by touching the outer shell of any grounded instrument chassis before touching the test port connectors.

Never touch the test lead contacts.

Use a work station equipped with an anti-static work surface.

Service

The voltage levels found in these test leads when used with the intended instruments do not warrant more than normal safety precautions for operator safety. Nevertheless, service should be performed only by qualified personnel.

Specifications

This section lists the complete 16338A specifications. These specifications are the performance standards and limits against which the 16338A is tested. When shipped from the factory, the 16338A meets the following specifications:

Common Specifications for the 16005B, C, D, 16006A, 16007A, B, and 16143B

Operating Temperature ..... 0 to 55°C
Operating Humidity ..... ≤95% RH (@40°C)
Non-operating Temperature ..... –40 to 70 °C
Non-operating Humidity ..... ≤95% RH (@40°C)

Specifications of the 16005B

Applicable Instrument ..... 4328A and 4338A
Cable Length ..... 40 cm
Weight ..... 40 g

Specifications of the 16005C, D

Applicable Instrument ..... 4328A and 4338A
Cable Length ..... 40 cm
Weight ..... 20 g

Specifications of the 16006A

Applicable Instrument ..... 4328A and 4338A
Cable Length ..... 40 cm
Weight ..... 15 g

Specifications of the 16007A, B

Applicable Instrument ..... 4328A and 4338A
Cable Length ..... 40 cm
Weight ..... 20 g

Specifications for the 16143B

Applicable Instrument 4338A
Cable Length ..... 60 cm
Weight ..... 220 g

Supplemental Performance Characteristics

This section gives supplemental performance characteristics. Supplemental performance characteristics are not specifications, but are typical characteristics included as additional information for the operator. Supplemental performance characteristics are not guaranteed.

Supplemental Performance Characteristics of the 16007A, B

Applicable DUT size
Diameter of DUT's terminals ..... ≤4 mm

Supplemental Performance Characteristics of the 16005B

Applicable DUT size
Diameter of DUT's terminals ..... ≤7.0 mm
Length of DUT's terminals ..... ≥3 mm

Supplemental Performance Characteristics of the 16005C, D

Applicable DUT size
Diameter of DUT's terminals ..... ≤1 mm
Space between DUT's terminals ..... ≥2 mm
Length of DUT's terminals ..... ≥2 mm

Supplemental Performance Characteristics of the 16143B

Applicable Test Leads
..... 16005A, 16005B, 16005C, 16005D
..... 16006A, 16007A, 16007B

2

Preparation for Use

Introduction

This chapter explains how to install the 16338A Test Lead Set. The topics covered include initial inspection, ambient environmental considerations, connecting the test leads for use and repackaging the test lead set for shipment.

Initial Inspection

These test leads have been carefully inspected electrically and mechanically before being shipped from the factory. They should be in perfect physical condition, no scratches, dents or the like, and it should be in perfect electrical condition. Verify this by carefully performing an incoming inspection to check the test leads for signs of physical damage and missing contents. If any discrepancy is found, notify the carrier and Agilent Technologies. Your Agilent Technologies sales office will arrange for repair and replacement without waiting for the claim to be settled.

1. Inspect the shipping container for damage, and keep the shipping materials until the inspection is completed.
2. Verify that the shipping container contains everything shown in Figure 2-1 and listed in Table 2-1.
3. Inspect the exterior of the contents of the 16338A for any signs of damage.

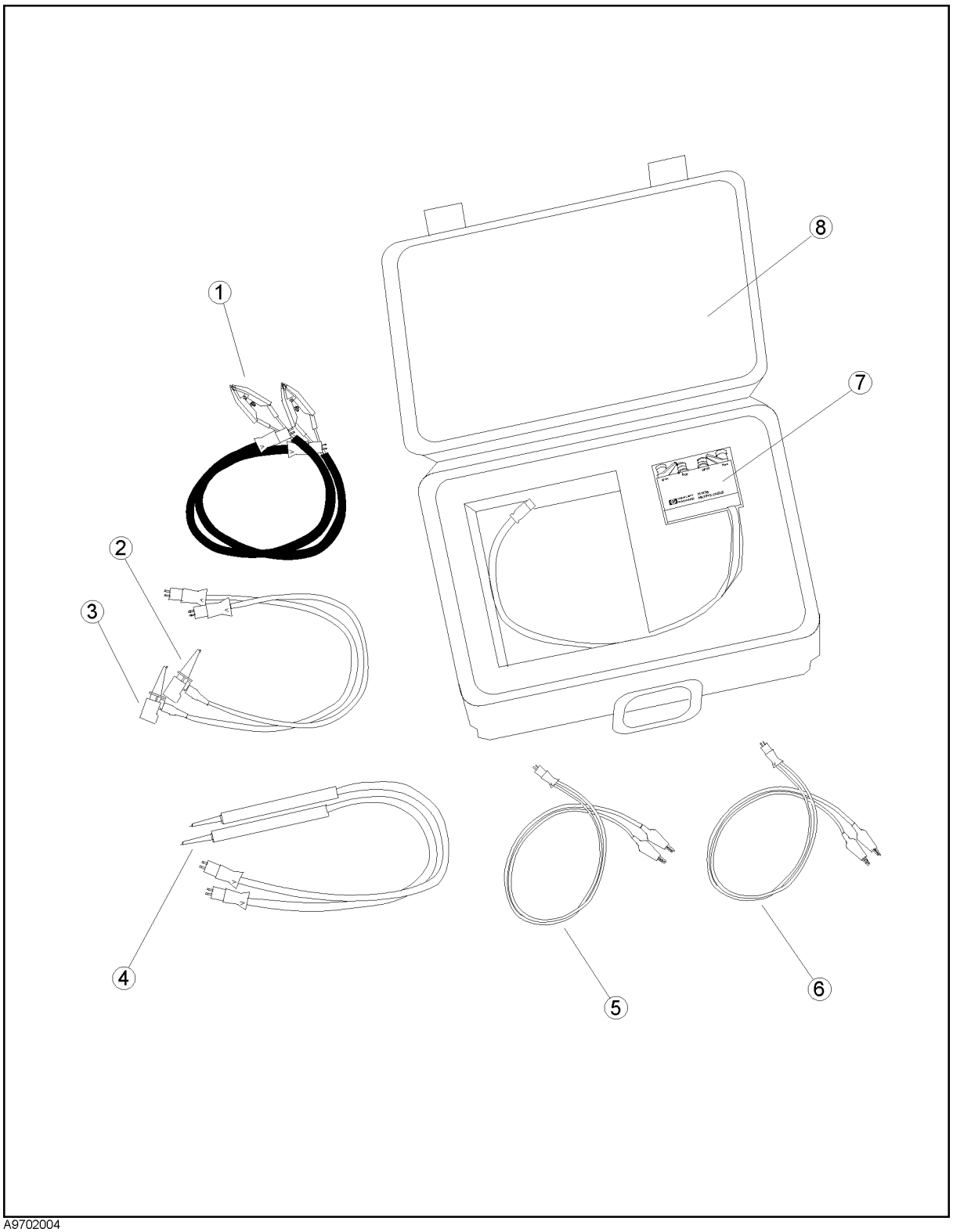

A9702004

Figure 2-1. 16338A Product Overview

Table 2-1. Contents of 16338A

No.	Description	Agilent Part Number	Quantity
①	Kelvin Clip Leads (large)	16005B	2
②	Kelvin Clip Leads (small, red)	16005C	1
③	Kelvin Clip Leads (small, black)	16005D	1
④	Pin-Type Probe Leads	16006A	2
⑤	Alligator Clip Lead (read)	16007A	1
⑥	Alligator Clip Lead (black)	16007B	1
⑦	Mating Cable	16143B	1
⑧	Carrying Case	16338-60001	1

Ambient Environmental Considerations

Operating and Storage

The 16338A must be operated within an ambient temperature range of 0°C to 55°C and relative humidity up to 95% at 40°C (non-condensing).

The 16338A may be stored within a temperature range of −40°C to +70°, and at a relative humidity of up to 95% at +40°C (non-condensing).

Connecting The Test Leads For Use

Configuration of Test Leads with Milliohmmeters

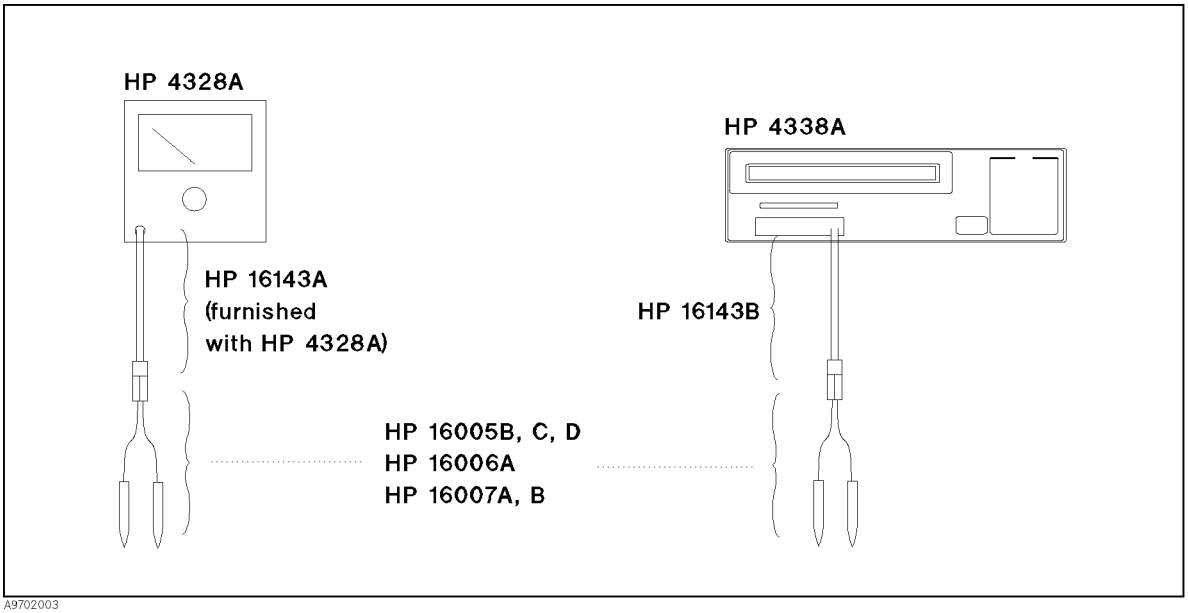

Figure 2-2. Configuration of Test Leads and Milliohm Meters

Connecting with 16143B to 4338A

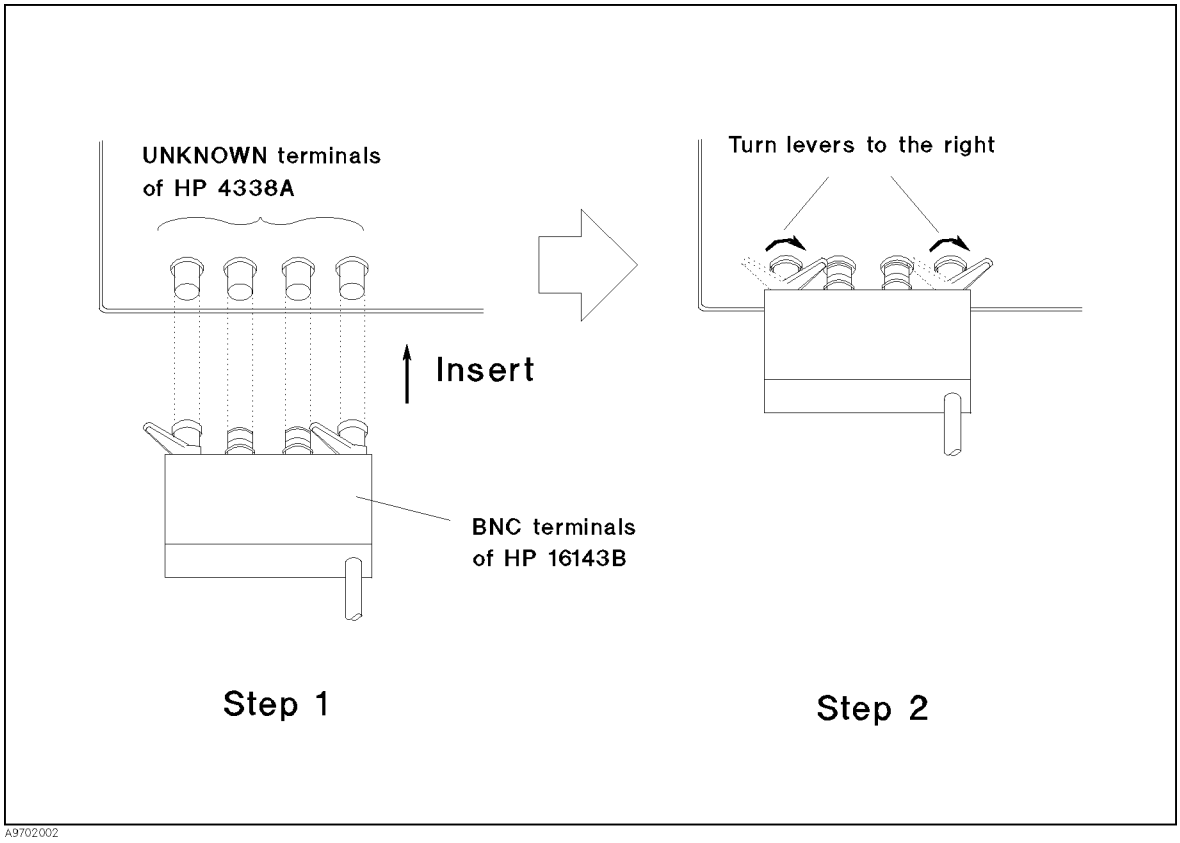

Figure 2-3. Connecting 16143B to 4338A

Connecting the Test leads to 16143A, B

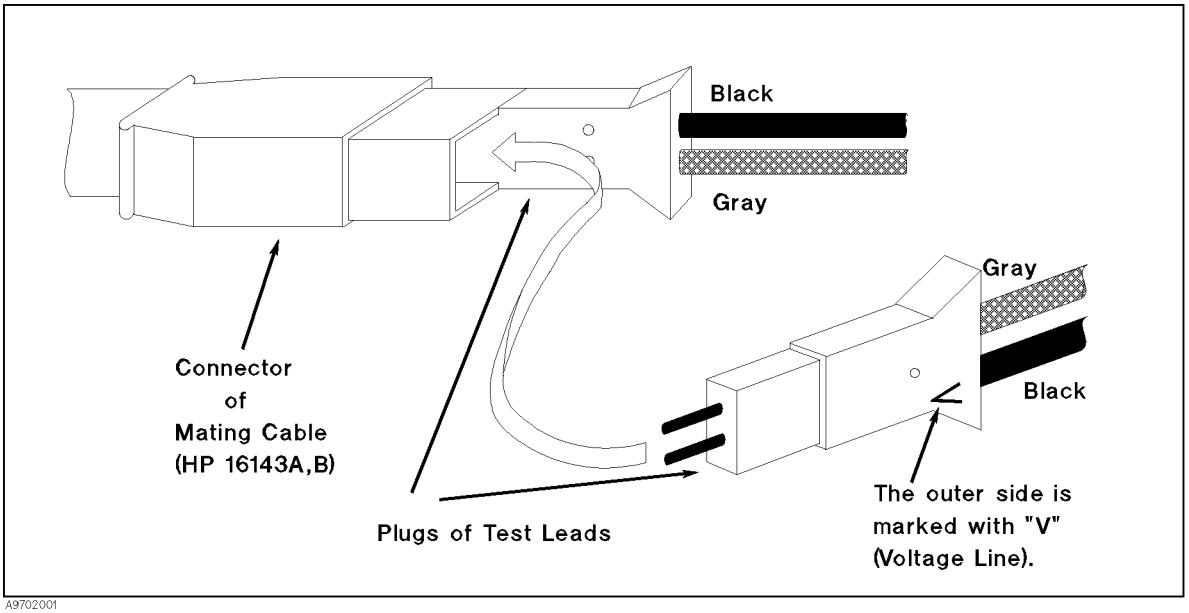

Figure 2-4. Connecting Test leads to 16143A, B

Note You can use any combination of test lead types with the 16143A, B.

Repackaging the Test Leads

If shipment to a Agilent Technologies service center is required, each test lead should be repackaged using the original factory packaging materials.

Alteratively, comparable packaging materials may be used. Wrap the test leads in heavy paper and pack in anti-static plastic packing material. Use sufficient shock absorbing material on all sides of the 16338A to provide a thick, firm cushion and to prevent movement. Seal the shipping container securely and mark it *FRAGILE*.

3

Operation

Introduction

This chapter describes using the test leads and correction techniques for these test leads.

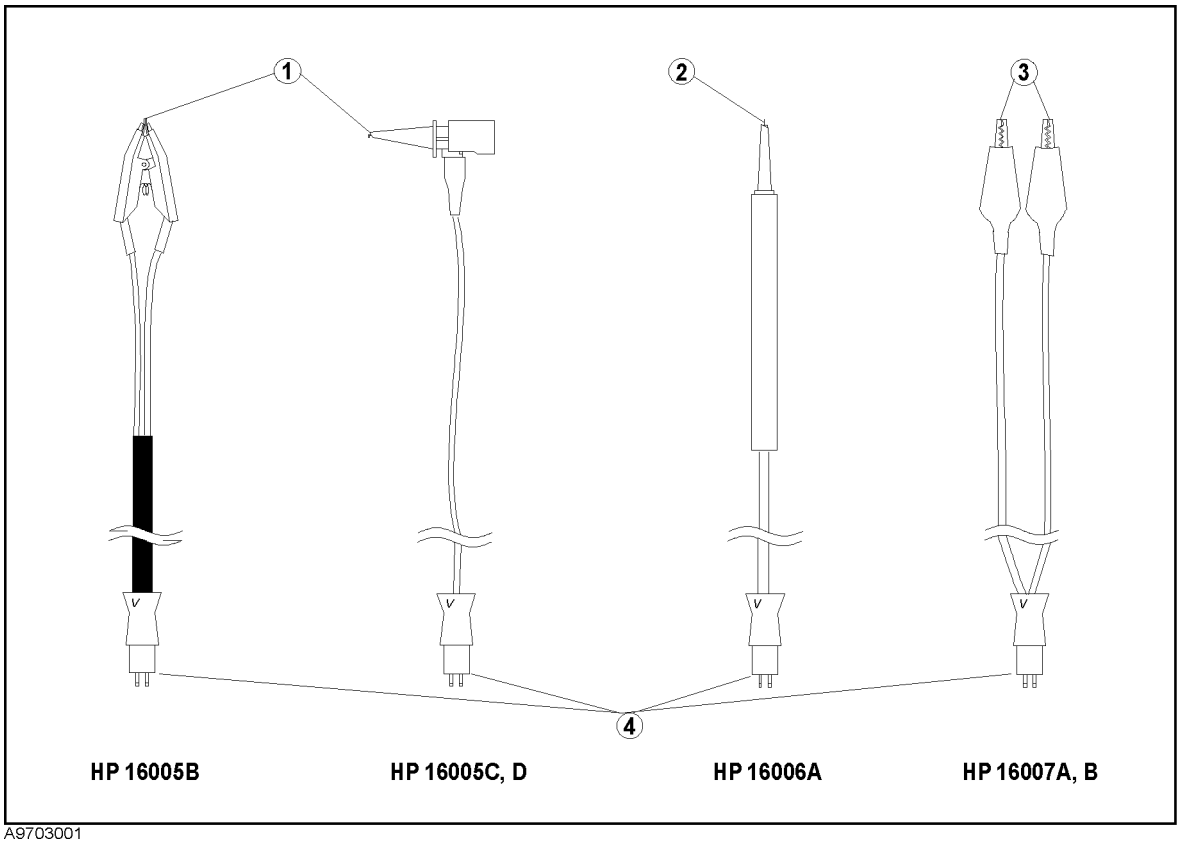

A9703001

Figure 3-1. Test Leads Features

① *Kelvin Clips.* These are connected to DUT.
② *Pin.* This is connected to DUT.
③ *Alligator Clips.* These are connected to DUT.
④ *Plug.* This connecter is connected to the Mating cable.

Caution To prevent the probes from being damaged, Do not open the jaws of the 16005B more than 7.0 mm.

Caution Avoid applying a high dc voltage (42 V peak max for 4338A, 150 V max for 4328A) between the probes, periodic surge current may damage the input circuit of the measurement instrument.

SHORT Correction

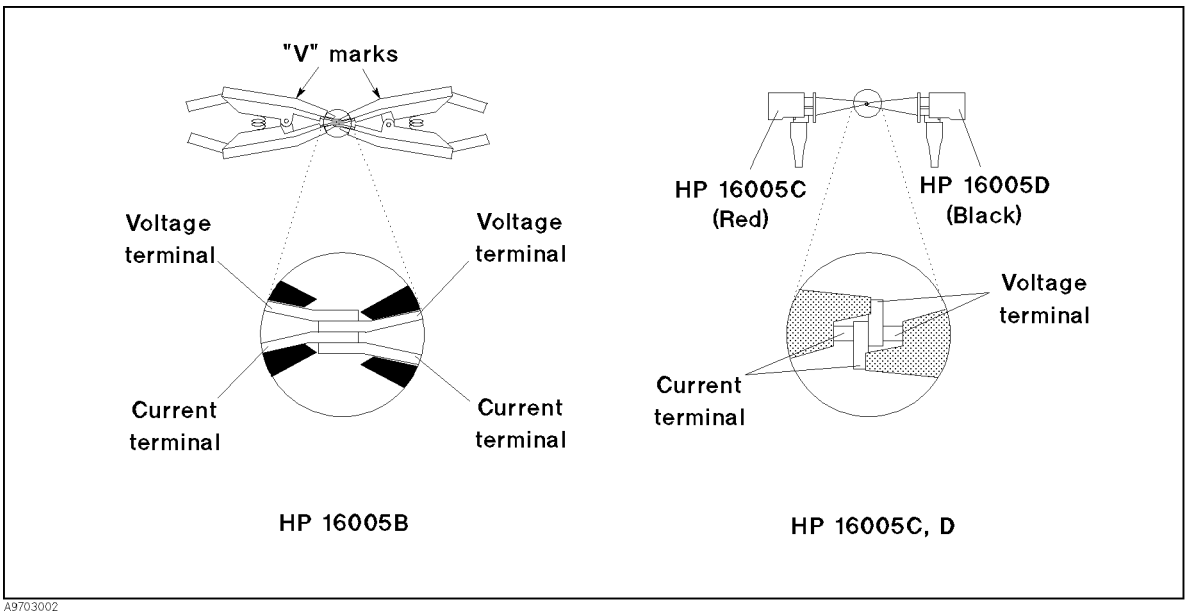

A9703002

Figure 3-2. Making a Shorting Connection for the 16005B, C, D

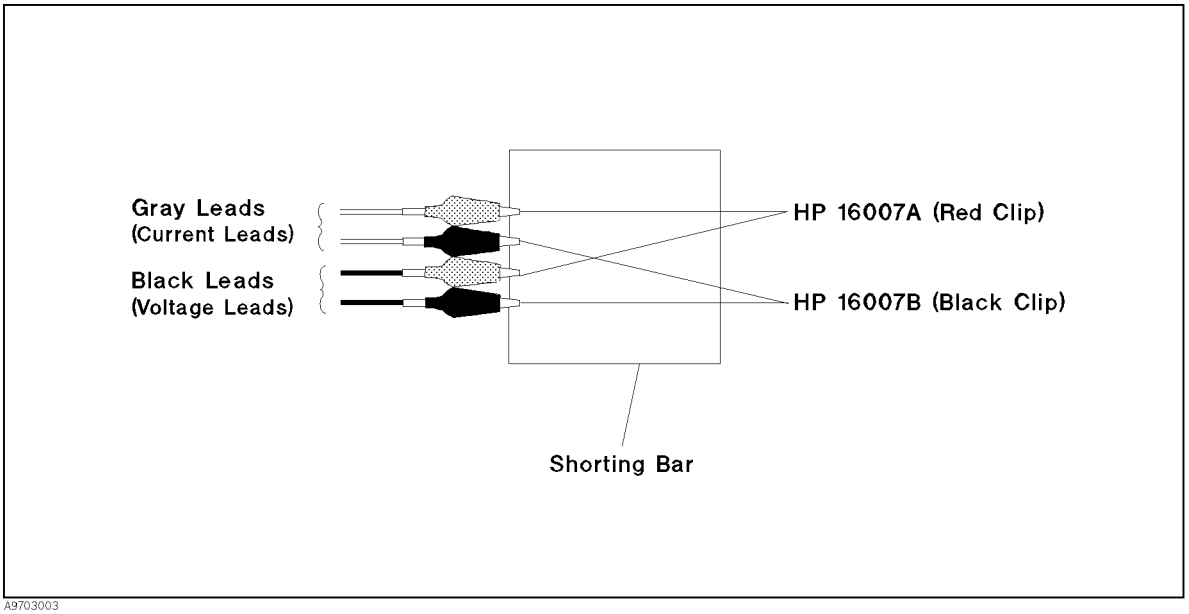

A9703003

Figure 3-3. Making a Shorting Connection for the 16007A, B

For 4338A

1. Connect the test probe clips together as shown in Figure 3-2 and Figure 3-3.
2. Perform SHORT correction on the 4338A. For step-by-step instructions on how to perform the correction, refer to *4338A Operation Manual.*

For 4328A

To verify proper conductivity of the 16338A, perform the following test when you use the 4328A:

1. Connect the test probe clips as shown in Figure 3-2 and Figure 3-3.
2. The 4328A's meter pointer should indicate zero ohms on the 1 mΩ range.
3. Disconnect the test probe clips. The meter pointer should deflect off-scale.

Shorting Bar

The shorting bar must have very low residual impedance, so a high conductivity metal plate that is not easily corroded to construct the shorting plate. (It must be clean.)

4

Service

Introduction

This chapter gives replaceable parts information for the following products:

- 16338A Test Lead Kit
- 16143B Mating Cable
- 16005B Kelvin Clip Lead
- 16005C Kelvin IC Clip Lead Red
- 16005D Kelvin Clip Lead Black
- 16006A Pin-type Probe Lead
- 16007A Alligator Clip Lead Red
- 16007B Alligator Clip Lead Black

16338A Replaceable Parts

Table 4-1 lists the replaceable parts for the 16338A . To order a part listed in the replaceable parts table, quote the Agilent part number, indicate the quantity required, and address the order to the nearest Agilent Technologies office.

Table 4-1. 16338A Replaceable Parts

Agilent Part Number	Qty.	Description
16143-60011[1]	1	Mating Cable[2]
16005-60011[1]	2	Kelvin Clip Lead[3]
16005-60012[1]	1	Kelvin IC Clip Lead Red[4]
16005-60014[1]	1	Kelvin IC Clip Lead Black[5]
16006-60001[1]	2	Pin-type Probe Lead
16007-60001[1]	1	Alligator Clip Lead Red
16007-60002[1]	1	Alligator Clip Lead Black
16338-60001	1	Carrying Case

1 Agilent internal-only part number.

2 See 16143A Replaceable Parts section for details.

3 See 16005B Replaceable Parts section for details.

4 See 16005C Replaceable Parts section for details.

5 See 16005D Replaceable Parts section for details.

16143B Replaceable Parts

Table 4-2 lists the replaceable parts for the 16143B. To order a part listed in the replaceable parts table, quote the Agilent part number, indicate the quantity required, and address the order to the nearest Agilent Technologies office.

Table 4-2. Replaceable Parts

Agilent Part Number	Qty.	Description
16143-60011[1]	1	Mating Cable[2]
16143-04001	1	Cover Top
0515-0914	2	Screw Mach M3×0.5

1 Agilent internal-only part number.

2 The whole unit.

16005B Replaceable Parts

Table 4-3 lists the replaceable parts for the 16005B. To order a part listed in the replaceable parts table, quote the Agilent part number, indicate the quantity required, and address the order to the nearest Agilent Technologies office.

Table 4-3. 16005B Replaceable Parts

Agilent Part Number	Qty.	Description
16005-60011[1]	1	Kelvin Clip Lead[2]
16005-60010	1	Kelvin Clip Assembly
16005-61602	1	Cable Assembly

1 Agilent internal-only part number.

2 The whole unit (includes the Kelvin Clip Assembly and the Cable Assembly).

16005C Replaceable Parts

Table 4-4 lists the replaceable parts for the 16005C. Figure 4-1 shows the connection from the cable to the clip assembly of the 16005C. To order a part listed in the replaceable parts table, quote the Agilent part number, indicate the quantity required, and address the order to the nearest Agilent Technologies office.

Table 4-4. 16005C Replaceable Parts

Reference[1] Designator	Agilent Part Number	Qty.	Description
	16005-60012	1	Kelvin IC Clip Lead Red[2]
1	16005-60013	1	Kelvin IC Clip Assembly Red
2	0890-1809	2 cm	Tube Heat Shrinkable Red
3	16005-61611	1	Cable Assembly

1 Corresponding to designator in Figure 4-1.

2 The whole unit (includes 1, 2 and 3). Agilent internal-only part.

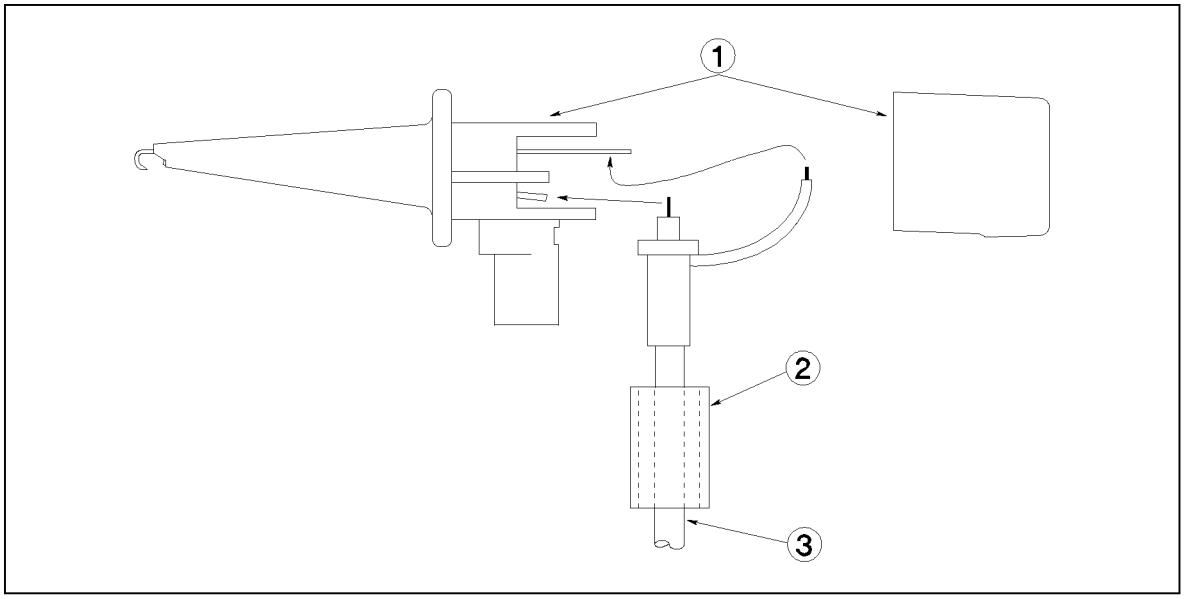

A990S001

Figure 4-1. Kelvin Clip Connections

16005D Replaceable Parts

Table 4-5 lists the replaceable parts for the 16005D. Figure 4-2 shows the connection from the cable to the clip assembly of the 16005D. To order a part listed in the replaceable parts table, quote the Agilent part number, indicate the quantity required, and address the order to the nearest Agilent Technologies office.

Table 4-5. 16005D Replaceable Parts

Reference[1] Designator	Agilent Part Number	Qty.	Description
	16005-60014	1	Kelvin IC Clip Lead Black[2]
1	16005-60015	1	Kelvin IC Clip Assembly Black
2	0890-1808	2 cm	Tube Heat Shrinkable Black
3	16005-61601	1	Cable Assembly

1 Corresponding to designator in Figure 4-2.

2 The whole unit (includes 1, 2 and 3). Agilent internal-only part.

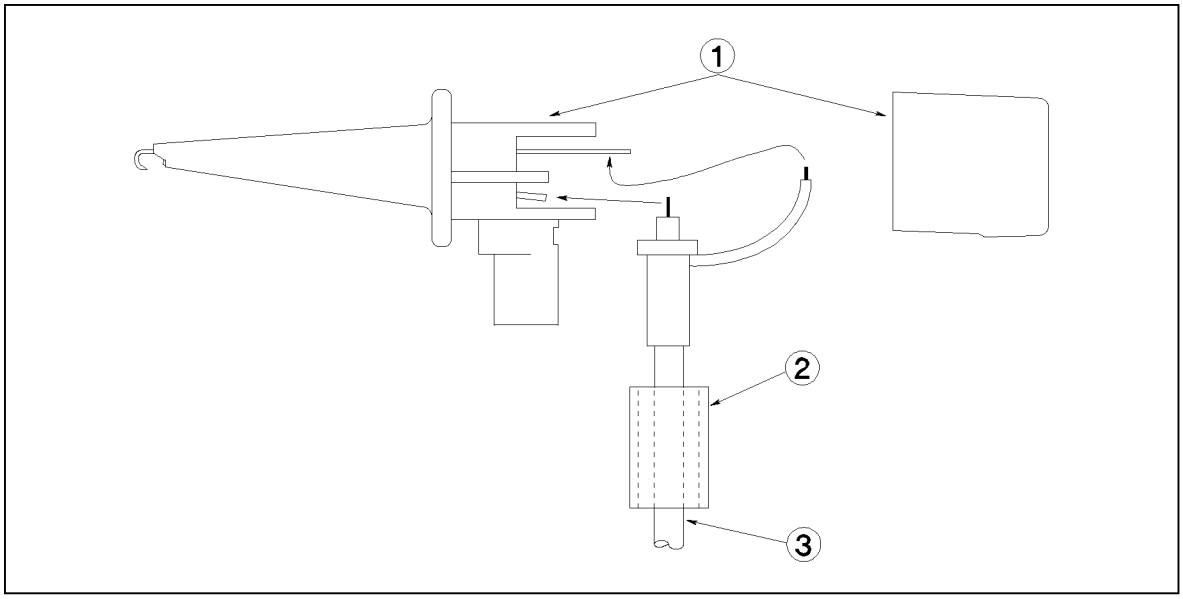

A990S001

Figure 4-2. Kelvin Clip Connections

16006A Replaceable Parts

Table 4-6 lists the replaceable parts for the 16006A. To order a part listed in the replaceable parts table, quote the Agilent part number, indicate the quantity required, and address the order to the nearest Agilent Technologies office.

Table 4-6. 16006A Replaceable Parts

Agilent Part Number	Qty.	Description
16006-60001[1]	1	Pin-type Probe Lead

1 Agilent internal-only part number.

16007A Replaceable Parts

Table 4-7 lists the replaceable parts for the 16007A. To order a part listed in the replaceable parts table, quote the Agilent part number, indicate the quantity required, and address the order to the nearest Agilent Technologies office.

Table 4-7. 16007A Replaceable Parts

Agilent Part Number	Qty.	Description
16007-60001[1]	1	Alligator Clip Lead Red

1 Agilent internal-only part number.

16007B Replaceable Parts

Table 4-8 lists the replaceable parts for the 16007B. To order a part listed in the replaceable parts table, quote the Agilent part number, indicate the quantity required, and address the order to the nearest Agilent Technologies office.

Table 4-8. 16007B Replaceable Parts

Agilent Part Number	Qty.	Description
16007-60002[1]	1	Alligator Clip Lead Black

1 Agilent internal-only part number.

REGIONAL SALES AND SUPPORT OFFICES

For more information about Agilent Technologies test and measurement products, applications, services, and for a current sales office listing, visit our web site: http://www.agilent.com/find/tmdir. You can also contact one of the following centers and ask for a test and measurement sales representative. *11/29/99*

United States:
Agilent Technologies
Test and Measurement Call Center
P.O.Box 4026
Englewood, CO 80155-4026
(tel) 1 800 452 4844

Canada:
Agilent Technologies Canada Inc.
5150 Spectrum Way
Mississauga, Ontario
L4W 5G1
(tel) 1 877 894 4414

Europe:
Agilent Technologies
Test & Measurement
European Marketing Organization
P.O.Box 999
1180 AZ Amstelveen
The Netherlands
(tel) (31 20) 547 9999

Japan:
Agilent Technologies Japan Ltd.
Call Center
9-1, Takakura-Cho, Hachioji-Shi,
Tokyo 192-8510, Japan
(tel) (81) 426 56 7832
(fax) (81) 426 56 7840

Latin America:
Agilent Technologies
Latin American Region Headquarters
5200 Blue Lagoon Drive, Suite #950
Miami, Florida 33126
U.S.A.
(tel) (305) 267 4245
(fax) (305) 267 4286

Australia/New Zealand:
Agilent Technologies Australia Pty Ltd
347 Burwood Highway
Forest Hill, Victoria 3131
(tel) 1-800 629 485 (Australia)
(fax) (61 3) 9272 0749
(tel) 0 800 738 378 (New Zealand)
(fax) (64 4) 802 6881

Asia Pacific:
Agilent Technologies
24/F, Cityplaza One, 1111 King's Road,
Taikoo Shing, Hong Kong
(tel) (852)-3197-7777
(fax) (852)-2506-9284