Advanced Test Equipment Rentals
www.atecorp.com 800-404-ATEC (2832)

Errata

Title & Document Type: 3569A Real-Time Frequency Analyzer Installation and Service Guide

Manual Part Number: 03569-90025

Revision Date: February 1995

HP References in this Manual

This manual may contain references to HP or Hewlett-Packard. Please note that Hewlett-Packard's former test and measurement, semiconductor products and chemical analysis businesses are now part of Agilent Technologies. We have made no changes to this manual copy. The HP XXXX referred to in this document is now the Agilent XXXX. For example, model number HP8648A is now model number Agilent 8648A.

About this Manual

We've added this manual to the Agilent website in an effort to help you support your product. This manual provides the best information we could find. It may be incomplete or contain dated information, and the scan quality may not be ideal. If we find a better copy in the future, we will add it to the Agilent website.

Support for Your Product

Agilent no longer sells or supports this product. You will find any other available product information on the Agilent Test & Measurement website:

www.tm.agilent.com

Search for the model number of this product, and the resulting product page will guide you to any available information. Our service centers may be able to perform calibration if no repair parts are needed, but no other support from Agilent is available.

Agilent Technologies

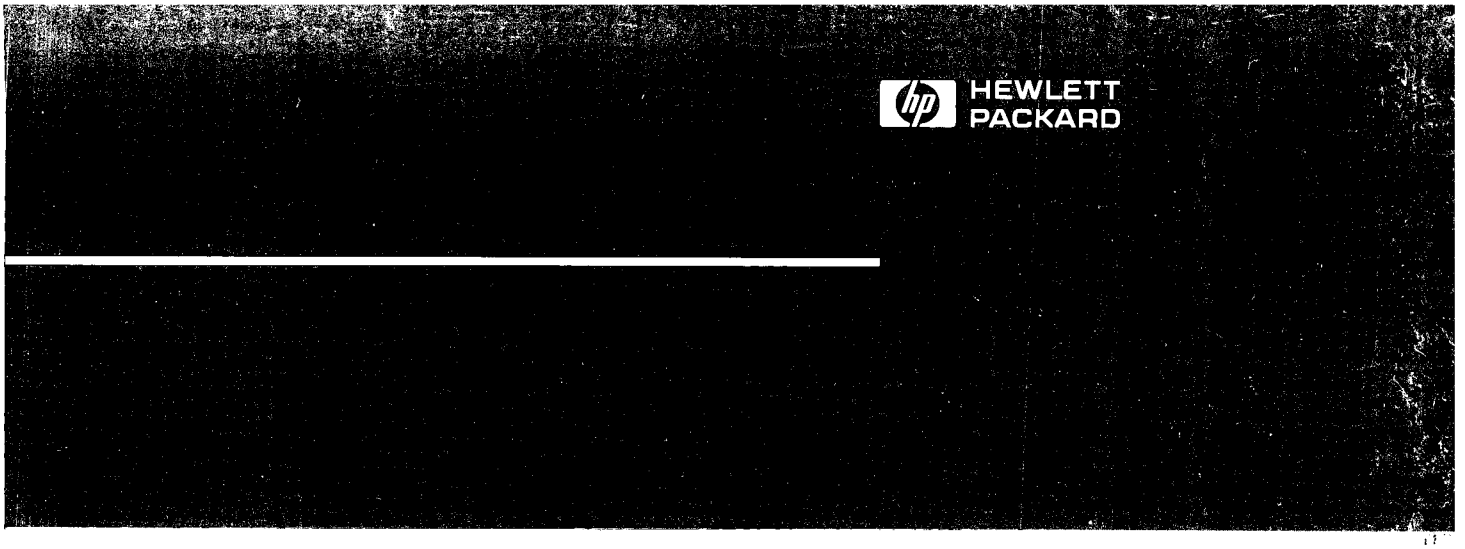

HP 3569A
Installation and Service Guide

HP3569A Real-Time Frequency Analyzer

Installation and Service Guide

For instruments with serial prefix 3222A and greater

HP Part Number 03569-90025
Mircofiche Part Number 03569-90225
Printed in U.S.A.

Print Date: February 1995

©Hewlett-Packard Company, 1992-1995. All rights reserved.
8600 Soper Hill Road Everett, Washington 98205-1298 U.S.A.

Warranty

The information contained in this document is subject to change without notice.

Hewlett-Packard makes no warranty of any kind with regard to this material, including, but not limited to, the implied warranties or merchantability and fitness for a particular purpose.

Hewlett-Packard shall not be liable for errors contained herein or for incidental or consequential damages in connection with the furnishing, performance, or use of this material.

Safety Summary

The following general safety precautions must be observed during all phases of operation, service, and repair of this instrument. Failure to comply with these precautions or with specific warnings elsewhere in this manual violates safety standards of design, manufacture, and intended use of the instrument. Hewlett-Packard Company assumes no liability for the customer's failure to comply with these requirements. This is a Safety Class 1 instrument.

Ground the Instrument

To minimize shock hazard, the instrument chassis and cabinet must be connected to an electrical ground. The instrument is equipped with a three-conductor ac power cable. The power cable must either be plugged into an approved three-contact electrical outlet or used with a three-contact to two-contact adapter with the grounding wire (green) firmly connected to an electrical ground (safety ground) at the power outlet. The power jack and mating plug of the power cable meet International Electrotechnical Commission (IEC) safety standards.

Do Not Operate in an Explosive Atmosphere

Do not operate the instrument in the presence of flammable gases or fumes. Operation of any electrical instrument in such an environment constitutes a definite safety hazard.

Keep Away from Live Circuits

Operating personnel must not remove instrument covers. Component replacement and internal adjustments must be made by qualified maintenance personnel. Do not replace components with power cable connected. Under certain conditions, dangerous voltages may exist even with the power cable removed. To avoid injuries, always disconnect power and discharge circuits before touching them.

Do Not Service or Adjust Alone

Do not attempt internal service or adjustment unless another person, capable of rendering first aid and resuscitation, is present.

Do Not Substitute Parts or Modify Instrument

Because of the danger of introducing additional hazards, do not install substitute parts or perform any unauthorized modification to the instrument. Return the instrument to a Hewlett-Packard Sales and Service Office for service and repair to ensure the safety features are maintained.

Dangerous Procedure Warnings

Warnings, accompany potentially dangerous procedures throughout this manual. Instructions contained in the warnings must be followed.

Safety Symbols

The following safety symbols are used throughout this manual and in the instrument. Familiarize yourself with each symbol and its meaning before operating this instrument.

General Definitions of Safety Symbols Used on Equipment or in Manuals

Instruction manual symbol. The product is marked with this symbol when it is necessary for the user to refer to the instruction manual to protect against damage to the instrument.

Indicates dangerous voltage (terminals fed from the interior by voltage exceeding 1000 volts must be so marked).

Protective ground (earth) terminal. Used to identify any terminal which is intended for connection to an external protective conductor for protection against electrical shock in case of a fault, or to the terminal of a protective ground (earth) electrode.

Low-noise or noiseless, clean ground (earth) terminal. Used for a signal common, as well as providing protection against electrical shock in case of a fault. A terminal marked with this symbol must be connected to ground in the manner described in the installation (operating) manual, and before operating the equipment.

Frame or chassis terminal. A connection to the frame (chassis) of the equipment which normally includes all exposed metal structures.

Alternating current (power line).

Direct current (power line).

Alternating or direct current (power line).

Warning

The warning sign denotes a hazard. It calls attention to a procedure, practice, condition or the like, which if not correctly performed or adhered to, could result in injury or death to personnel.

Caution

The caution sign denotes a hazard. It calls attention to an operating procedure, practice, condition or the like, which, if not correctly performed or adhered to, could result in damage to or destruction of part or all of the product or the user's data.

Hewlett-Packard
8600 Soper Hill Road
Everett, Washington 98205-1298

Printed in U.S.A

Herstellerbescheinigung

Hiermit wird bescheinigt, daß das Gerät/System

HP 3569A Real Time Frequency Analyzer

in Übereinstimmung mit den Bestimmungen von Postverfügung 1046/84 funkentstört ist.

Der Deutschen Bundespost wurde das Inverkehrbringen dieses Gerätes/Systems angezeigt und die Berechtigung zur Überprüfung der Serie auf Einhaltung der Bestimmungen eingeräumt

Zusatzinformation für Meß- und Testgeräte

Werden Meß- und Testgeräte mit ungeschirmten Kabeln und/oder in offenen Meßaufbauten verwendet, so ist vom Betreiber sicherzustellen, daß die Funk-Entstörbestimmungen unter Betriebsbedingungen an seiner Grundstücksgrenze eingehalten werden.

Manufacturer's declaration

This is to certify that the equipment

HP 3569A Real Time Frequency Analyzer

is in accordance with the Radio Interference Requirements of Directive FTZ 1046/1984. The German Bundespost was notified that this equipment was put into circulation, the right to check the series for compliance with the requirements was granted.

Additional Information for Test- and Measurement Equipment

If Test- and Measurement is operated with unscreened cables and/or used for measurements on open set-ups, the user has to assure that under operating conditions the Radio Interference Limits are still at the border of his premises.

Table of Contents

Chapter 1: Installation

Introduction 1-1
Safety Considerations 1-1
Instrument Description 1-2
Options and Accessories 1-2
Installation 1-5
Introduction 1-5
Incoming Inspection 1-5
PaIncoming Tests 1-6
Battery Recharging 1-7
Grounding Requirements 1-10
Operating Environment 1-12
RS-232 Interface Connections 1-13
Screen (LCD) Cleaning 1-16
Carrying Case 1-17
Instrument Installation 1-17
Carrying Case Configurations 1-19
Turning on the HP 3569A 1-21
Need Assistance? 1-21
Storage and Shipment 1-22
Serial Numbers 1-23
Recommended Test Equipment 1-24

Chapter 2: HP 3569A Real-Time Frequency Analyzer Specifications:

Chapter 3: HP 3569A Operation Verification Test

Operation Verification Test 3-1
Equipment Required 3-1
HP 3569A Performance Tests 3-4
#1 Turn On and Self Test 3-4
#2 Residual DC Response Test 3-5
#3 Noise and Spurious Signals Test 3-7
#4 Amplitude Accuracy Test 3-11
3569A Performance Test Record 3-35

(Continued)

Chapter 4: General Service Information

Introduction 4-1
How to Use this section 4-1
Instrument Identification 4-2
Accessories Supplied 4-2
Safety Considerations 4-3
Equipment Required 4-3

Chapter 5: Adjustments

Introduction 5-1
Safety Considerations 5-1
Equipment required 5-2
Adjustment Locations 5-2
Adjustment Summary 5-2
#1. Input and ADC Offset 5-3
#2. 20 kHz Flatness 5-5
#3. ADC Gain 5-8
#5. Phase Match 5-10
6 Real Time Clock Timebase 5-12

Chapter 6: Replaceable Parts

Introduction 6-1
Ordering Information 6-2
Ordering Non-Listed Parts 6-2
Direct Mail Order System 6-2
Assemblies 6-4
Cables 6-5
Hardware 6-6
Disassembly Instructions 6-7
Battery Pack Removal 6-8
Bottom Cover Removal 6-9
A4 Noise Source Assembly Removal 6-10
A3 Analog Assembly Removal 6-11
A2 Main Assembly Removal 6-12
A1 DSP Assembly Removal 6-13
LCD Display Removal 6-14
Assembly Instructions 6-15

Chapter 7: Manual Backdating

Introduction 7-1
Manual Changes Supplement 7-1

Chapter 8: Circuit Descriptions

Introduction 8-1
Overall Instrument Description 8-2
Overall Block Diagram 8-3
Assembly Descriptions 8-6
A1 Digital Signal Processing/Keyboard 8-7
A2 Main Processor Board 8-8
A3 Analog Board 8-9
A4 Noise Source Board 8-10
ROM Update Procedure 8-11

Chapter 9: Troubleshooting

Introduction 9-1
Safety Considerations 9-1
Equipment Required 9-2
How to Use This Section 9-2
Troubleshooting Hints 9-2
Choosing a Troubleshooting Test 9-3
What to do after an Assembly is Replaced 9-5
Test 1. Dead Instrument Test 9-6
Test 2. Display Test 9-8
Test 3. Battery Test 9-8
Troubleshooting using the Self Tests 9-9
Self-Test Descriptions 9-10

Index

Installation

Installation

Introduction

This section of the *HP 3569A Installation & Service Guide* contains installation information, specifications and the operation verification and performance tests. In this chapter you will learn how to:

- inspect your shipment for completeness and damage
- prepare the instrument for use
- recharge the battery pack
- use the carrying case

This chapter also contains important safety information and lists some accessories and options you may be interested in using with your HP 3569A Portable Real-Time Frequency Analyzer.

Safety Considerations

The HP 3569A Real-Time Frequency Analyzer is a Safety Class II instrument. Although the instrument's design is in accordance with international safety standards, this manual contains information, cautions, and warnings that you must follow to ensure safe operation and retain the HP 3569A Real-Time Frequency Analyzer in safe operating condition. Service must be performed by qualified, trained service personnel who are aware of the hazards involved (such as fire and electrical shock).

Instrument Description

The HP 3569A Real-Time Frequency Analyzer is a portable, battery-powered two-channel analyzer for noise-control engineers who need complete acoustics analysis outside the laboratory. As such, the HP 3569A is ideally suited for the in-situ testing of acoustic noise—with the measurement power to ensure compliance with international acoustic standards. Remote operation(via the RS-232 port) and file transfer capabilities make the analyzer suitable for remote and/or automated operation.

The HP 3569A Real-Time Frequency Analyzer packs the performance of larger transportable analyzers into a low-cost, hand-held package weighing less than 3.2 kg (7 lbs), including battery. The analyzer is both water and shock resistant and equipped with a display backlight for operation in low ambient light.

The standard HP 3569A includes real-time 1/1- and 1/3-octave measurements. With appropriate options, your analyzer can be equipped to make Real Time Intensity, Reverberation Time, and Narrowband FFT measurements. With all options installed, the HP 3569A provides for the acoustical, electrical, and mechanical analysis and troubleshooting needs of the noise-control engineer.

The analyzer's RS-232 port allows communication with popular printers and plotters. You can print displays, status screens, tabular data, and catalog listings to compatible printers, such as the HP QuietJet, HP LaserJet, HP DeskJet, or an Epson FX-80 printer. You can also plot to HP-GL plotters. The baud rate and parity bit are selectable. You can transfer stored data to a computer via the RS-232 and convert it to Hewlett-Packard's SDF (Standard Data Format) by using the SDF Utilities provided with the analyzer.

Typical applications for the HP 3569A include:

- sound power measurements
- in-situ sound pressure measurements
- sound-intensity measurements
- community noise
- architectural acoustics

Options and Accessories

The following list is provided for information only and is subject to change without notice. For current ordering information, contact your nearest Hewlett-Packard sales/service office.

The standard HP 3569A includes a rechargeable battery pack, ac adapter, carrying case, SDF utilities to share data with a PC, customer documentation, and a three-year warranty. The ac adapter recharges the batteries during operation or can recharge a spare external battery pack when used with a battery charge adapter (supplied with the optional extra battery pack).

Options

- Option AY1: Real-time Intensity measurements [1]
- Option AY2: Narrowband FFT measurements
- Option AY3: Reverberation Time measurements
- Option 550: Enhanced Data Transfer Utilities for PCs
- Option OB1: Extra customer documentation

Batteries and Accessories

- HP 1420-0504 Extra NiCd battery pack
- HP 03560-84405 Battery-charging adapter kit (includes extra NiCd battery pack and recharging module)

Microphones and Cables

- HP ACOJ-7012XX Microphone, free field, standard sensitivity
- HP ACOJ-7046XX Microphone, free field, high sensitivity
- HP ACOJ-7013XX Microphone, pressure, standard sensitivity
- HP ACOJ-7047XX Microphone, pressure, high sensitivity
- HP ACOP-4012XX Microphone preamplifier
- HP ACOP-9200XX Microphone power supply (battery) for HP 3566/7 or HP 35665A
- HP 35210A 4-meter extension cable (LEMO male to female)
- HP 35210B 10-meter extension cable (LEMO male to female)
- HP 35211A 2-meter cable (Brüel and Kjær microphone preamp to the HP 3569A)
- HP 35212A 2-meter cable (ACO microphone preamp to the HP 3569A)

Acoustic Calibration Accessories

- HP 35234A Calibrator Kit (includes all items below, plus soft case)
- HP 35233A Pistonphone Calibrator
- HP 35236A Cavity Calibrator for sound-intensity probe
- HP 35235A Barometer

Accelerometers

- HP PCBI-353A16 Accelerometer for general vibration measurements
- HP PCBI-353A24 Accelerometer for machinery vibration measurements
- HP PCBI-336C34 Accelerometer for structural measurements and modal analysis
- HP WILC-973XXX Accelerometer for vibration measurements in rugged environments
- HP ENDC-7754XX Accelerometer for ultra low levels

Velocity Probe

- HP WILC-HV8XX Handheld velocity probe for industrial vibration measurements

[1] On instruments with serial numbers beginning in 3400 or less, Real-Time Intensity measurements are included in the standard instrument.

Hammer Kits

- HP PCBI-291M54 Hammer kit with 0.3-pound hammer, for modal analysis
- HP PCBI-291M55 Hammer kit with 3.0-pound hammer, for modal analysis

Cables to Peripherals

- HP 24542G, connects the HP 3569A's RS-232 to a printer/plotter/computer (25-pin)
- HP 24542H, connects the HP 3569A's RS-232 to an HP 7550A plotter
- HP 24542M, connects the HP 3569A's RS-232 to a modem
- HP 24542U, connects the HP 3569A's RS-232 to a PC-AT computer (9-pin)

Palmtop PC

- HP F1010A HP 95LX Plamtop PC with 1 MB RAM
- HP F1004A 1 MB battery-backed RAM card
- HP F1001A Connectivity Pack for PC-AT computer

AC Adapters

- HP 82241-60001 (United States)
- HP 82241-60002 (Europe)
- HP 82241-60003 (United Kingdom)
- HP 82241-60004 (Australia)
- HP 82241-60005 (South Africa)
- HP 82241-60006 (Japan)

Installation

Introduction

Read this section to find out how to recharge the batteries and what operating environment you need to install the HP 3569A Real-Time Frequency Analyzer. This section also includes instructions for cleaning the screen, how to use the carrying case, and information on storage and shipment.

Incoming Inspection

The HP 3569A Real-Time Frequency Analyzer was carefully inspected both mechanically and electrically before shipment. It should be free of marks or scratches and, it should meet its published specifications upon receipt. The batteries must be recharged before you operate the analyzer the first time. The appropriate ac adapter for the country of destination is shipped with the instrument.

Inspect the analyzer for physical damage incurred in transit. If the analyzer was damaged in transit, save all packing materials, file a claim with the carrier, and call your Hewlett-Packard sales and service office.

Warning

If the analyzer is mechanically damaged, do not connect the analyzer to power.

Performance Tests

Finish incoming inspection by testing the electrical performance of the analyzer using the operation verification or performance tests in chapter 3. The operation verification test verifies the basic operating integrity of the analyzer. It takes about ten minutes to complete this test. The performance tests verify that the analyzer meets all the performance specifications. It takes about three hours to complete these tests.

Battery Recharging

The analyzer is fully battery operated. The rechargeable NiCd battery pack comes already installed in the instrument and provides power for the HP 3569A. The battery pack holds a charge for approximately four hours of continued operation.

Note

The battery in the HP 3569A may not be fully charged when you receive it due to normal capacity loss during storage and shipment. To fully charge the battery, use the instructions below. The analyzer can be operated while you charge the battery.

The procedures outlined below explain how to recharge the battery pack. Use the ac adapter to charge the battery. It takes about 14 hours to charge a fully discharged battery pack. The battery pack can be recharged outside the HP 3569A if you use the battery charging adapter furnished with the optional Extra Battery Pack. The instrument can be operated while the ac adapter is connected without affecting the recharge time. Charging the extra battery pack while you use the analyzer provides the capability to operate the analyzer continually.

Warning

Do not use any other ac adapter than those listed in figure 1-3. The battery pack is designed specifically to work with an HP ac adapter; Hewlett-Packard is therefore not responsible for damages caused by using a non-HP ac adapter or a non-HP battery pack.

To recharge the internal battery pack:

1. Verify that the ac power source voltage matches the input voltage on the ac adapter label.
2. Plug in the ac adapter to the ac power source.
3. Connect the ac adapter cable to the analyzer's battery charging socket labeled "ac adapter" located on the connector panel. See figure 1-1. The green LED near the socket indicates the battery is charging.
4. Allow about 5 hours for the battery pack to be 80% charged or about 14 hours for a full charge. This charge typically lasts four hours for continual operation.

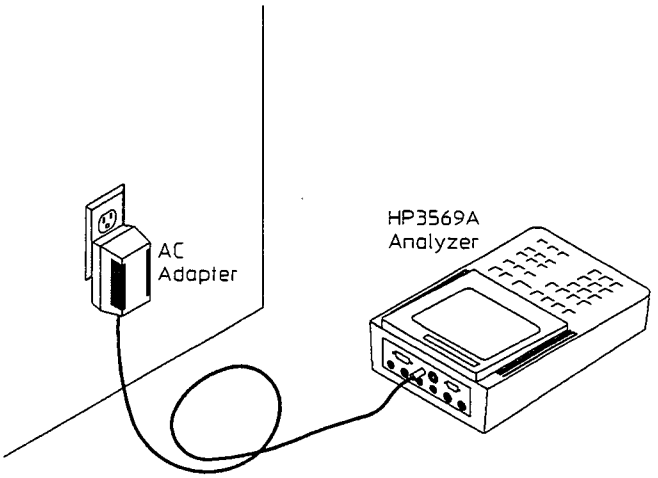

Figure 1-1.
Recharging the internal battery pack

To recharge the Extra Battery Pack:

1. Verify that the ac power source voltage matches the input voltage on the ac adapter label.
2. Plug in the ac adapter to a single-phase ac power source.
3. Connect the ac adapter cable to the battery charging adapter input, 03560-84405, connect the battery pack to the battery charging adapter output. See figure 1-2.
4. Allow about 5 hours for the battery pack to be 80% charged or about 14 hours for a full charge. This charge typically lasts 6 hours for continual operation.

To replace the internal battery pack of the HP 3569A:

1. Remove the discharged battery pack from the analyzer by using a coin to remove the two slotted screws on the analyzer's battery cover.
2. Lift the battery cover and carefully pull out the battery pack.
3. Disconnect the discharged battery pack by pressing down on the connector's locking tab while carefully separating the white plastic connector.
4. Connect the white plastic connector of the charged battery pack to the white connector in the instrument. Notice the polarization allows the connectors to mate only one way.
5. Place the charged the battery pack in its compartment, replace the battery cover, and secure the slotted screws.

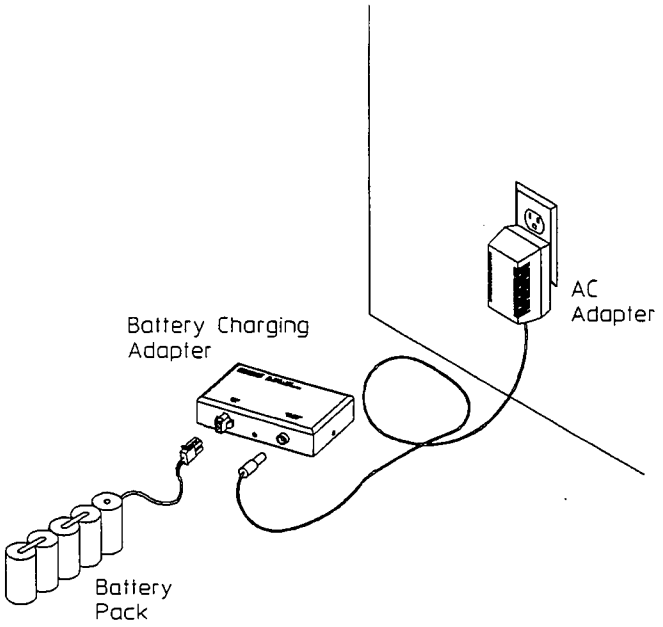

Figure 1-2.
Recharging the extra battery pack

Low Battery Indication

A "BAT" screen messages appears on the display when about one hour of operating time remain. The HP 3569A automatically turns off if the battery charge gets very low.

Warning

- **Do not short the battery.**
- **Do not incinerate. The battery can burst if you throw it into a fire.**
- **Do not put the battery pack within reach of children.**
- **Do not disassemble the battery.**

Grounding Requirements

Since the HP 3569A is battery operated, there is no need to ground the instrument while operating it. When you connect the instrument to an external device like a plotter, printer, or computer, the RS-232 connector and the BNC connectors are connected to ground internally. See "RS-232 Interface Connections" which follows for more information on RS-232.

The analyzer is equipped with an ac-adapter for recharging the internal battery pack. The operating voltage of the ac adapter shipped with each analyzer depends on the country of destination. See figure 1-3 for the available ac adapter configurations.

Caution

When you are using transducers, make sure you electrically isolate each transducer by using non-metallic washers, nuts, or wax for securing the transducer to the device under test. This is especially important when you use both channels on the analyzer. Failing to electrically isolate the transducers may cause ground currents to form between channels which can introduce errors in the data.

Japan HP Part No. 82241-60006 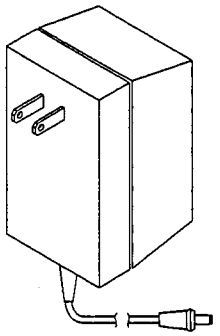 100V-50Hz Operation	Australia/New Zealand HP Part No. 82241-60004 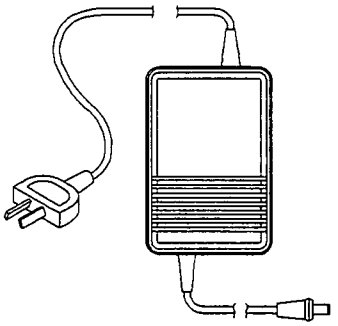 240V-50Hz Operation	Europe HP Part No. 82241-60002 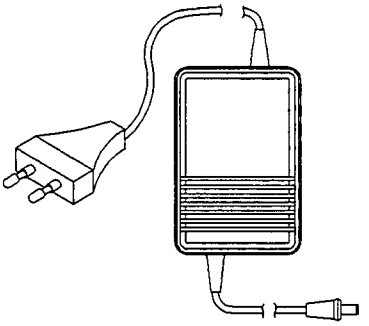 220V-50Hz Operation
USA/Canada HP Part No. 82241-60001 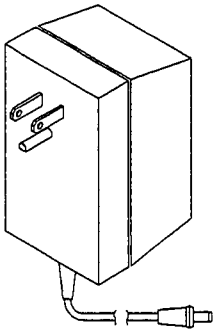 120V-60Hz Operation	South Africa HP Part No. 82241-60005 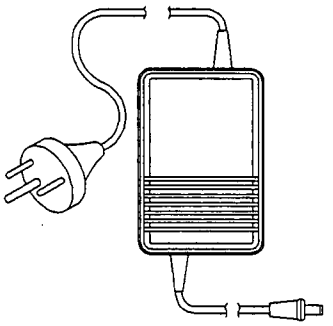 240V-50Hz Operation	United Kingdom HP Part No. 82241-60003 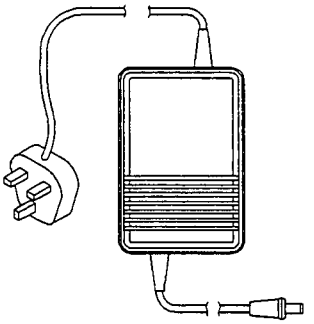 240V-50Hz Operation

Figure 1-3.
AC Adapter Plug Configurations

Operating Environment

The operating and storage environment specifications for the analyzer are listed in chapter 2 under "General."

Warning

When recharging, do not expose the ac adapter to rain or other excessive moisture to prevent shock hazard.

Although the analyzer enclosure is water-resistent, you should protect the analyzer from moisture and temperatures (or temperature changes) that can cause condensation inside the analyzer.

RS-232 Interface Connections

The analyzer is compatible with the RS-232 interface. Use this interface to send data to a printer, plotter, or computer. The HP 3569A is a 9-pin interface that conforms to EIA/TIA-562 and EIA/TIA-574 standards. Connect the analyzer to the RS-232 via the 9-pin RS-232 connector located on the connector panel. Figures 1-4 and 1-5 show the cabling, pin assignments, and connection instructions. The RS-232 connector on the HP 3569A is the same type and pin arrangement as the RS-232 connector on a PC-AT compatible computer. This is convenient for interchangeably connecting the printer to the computer and the analyzer.

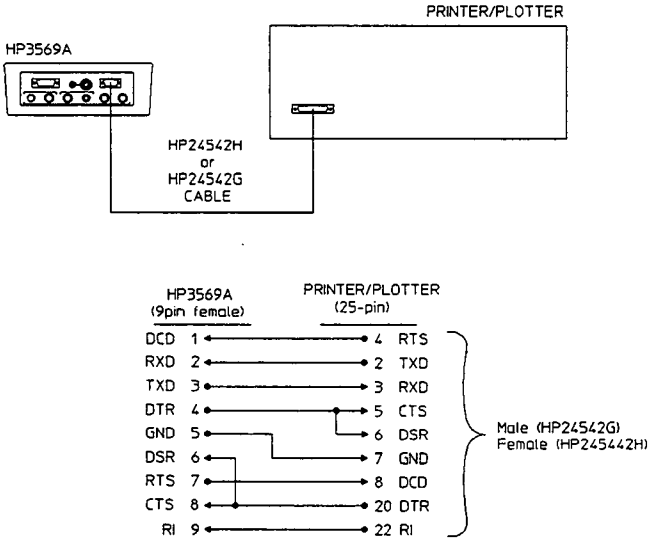

Figure 1-4.
Printer/Plotter RS232 Connection

* Use the HP 24542H cable with the HP 7550A plotter.

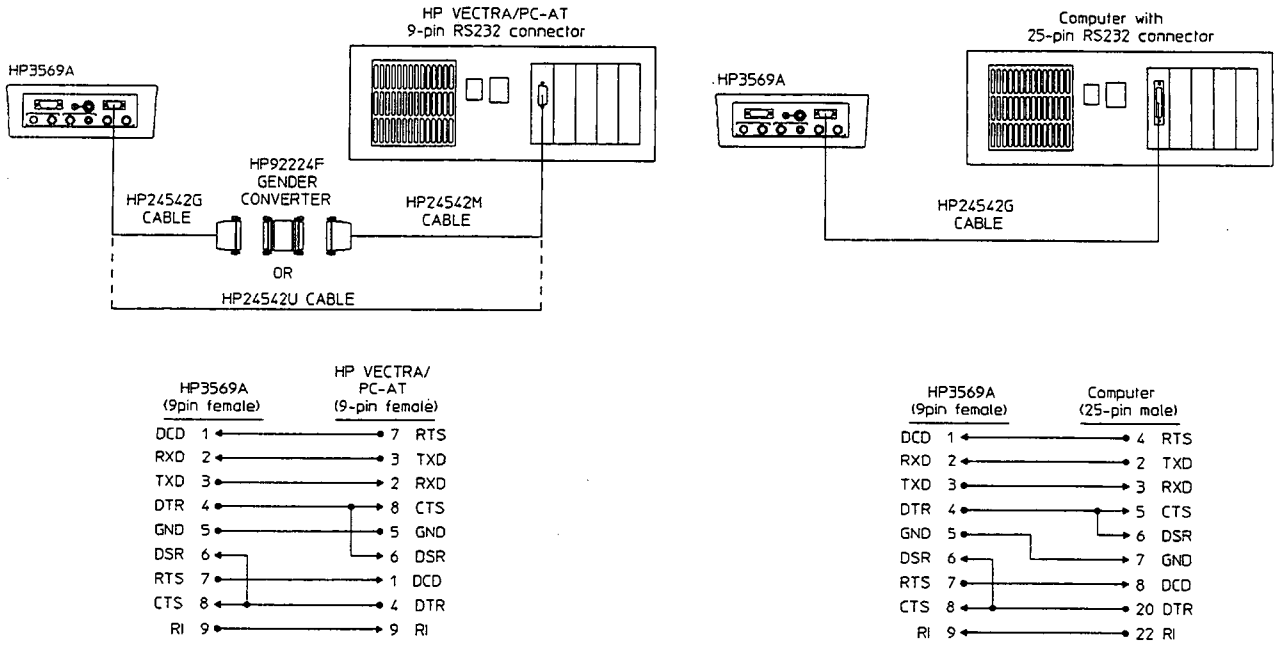

Figure 1-5.
Computer RS232 Connection

Note

Some printers indicate "buffer full" by switching a secondary RTS line; usually on pin 11 of the printer D (25-pin) connector. For correct handshaking with this type of printer, pin 11 should be connected to either CTS or DSR on the HP 3569A.

RS-232 Transmit (relevant signals TXD, CTS and DSR)

Set the PC, printer, or plotter baud rate, parity, and the number of bits to match the HP 3569A. Printer data is binary raster information, so you must select 8 data bits with no parity. For plotters, simply make sure the analyzer and plotter settings are the same. Refer to the operating guide of the printer or plotter for more information on how to change baud rate, parity, and number of data bits. Configure the plotter or printer for a "Hardware handshake" or "DTR handshake". The HP 3569A can also use the "XON/XOFF handshake".

The HP 3569A operates a hardware handshake on either CTS or DSR inputs. Therefore, for the analyzer to transmit data on TXD, both CTS and DSR must be at RS-232 positive voltage level (between +3V and +12V). CTS and DSR can be driven by the receiving device connected to the instrument or can be strapped active. The HP 3569A ceases transmission when CTS or DSR or both are driven to RS-232 negative voltage level. Transmit handshaking can therefore be performed on either or both lines.

RS-232 Receive (relevant signals RXD, RTS, and DTR)

When the HP 3569A is used with a printer or plotter the RS-232 does not receive data. The HP 3569A can be controlled remotely by connecting a computer or terminal to the RS-232. In this case the RS-232 is used to receive data. When the analyzer is on both the RTS and DTR outputs are set to the RS-232 positive level to enable the reception of data

---

Note

The HP 3569A is configured as Data Terminal Equipment (DTE). When you connect the analyzer via the RS-232 port to another piece of equipment, make sure one is set to receive data and the other is set to transmit data.

Screen (LCD) Cleaning

The analyzer screen is covered with a protective cover. This cover this is not user-removable. If a foreign material adheres itself to the screen

- Turn off the analyzer by pressing [**Shift**] [**Off**].
- Slightly dampen a soft, lint-free cloth with a mild detergent mixed in water.
- Carefully dry with a soft cloth.

Caution

To prevent damage to the analyzer, do not use cleaning solutions other than the above.

Carrying Case

Instrument Installation

The analyzer can be used on a bench or in the field. For field use, the analyzer slips into the carrying case as shown in figure 1-6. This carrying case is really two cases in one. One side holds the instrument and the other side serves as an accessories compartment. This lets you carry all you need to the site, yet when you want to start using the instrument the accessory compartment zips off and lets you turn the carrying case into a light "skin-pack" for comfortable operation.

To install the instrument in the carrying case:

1. Unzip the front cover of the carrying case.
2. Flip back the clear plastic front panel cover and the elastic bracing straps. The clear plastic front panel cover adds protection from dirt, spills and fingerprints.
3. Place the instrument in its compartment and secure the the elastic bracing straps over the instrument (below the display but above the front panel keys).
4. Flip the plastic front panel cover over the keypad of the instrument and secure it to the elastic bracing strap.
5. Zip the front cover and carry the case using either the handle on the side or connect the neck strap and carry the case over your shoulder. The neck strap and waist straps are shipped inside the accessory compartment.

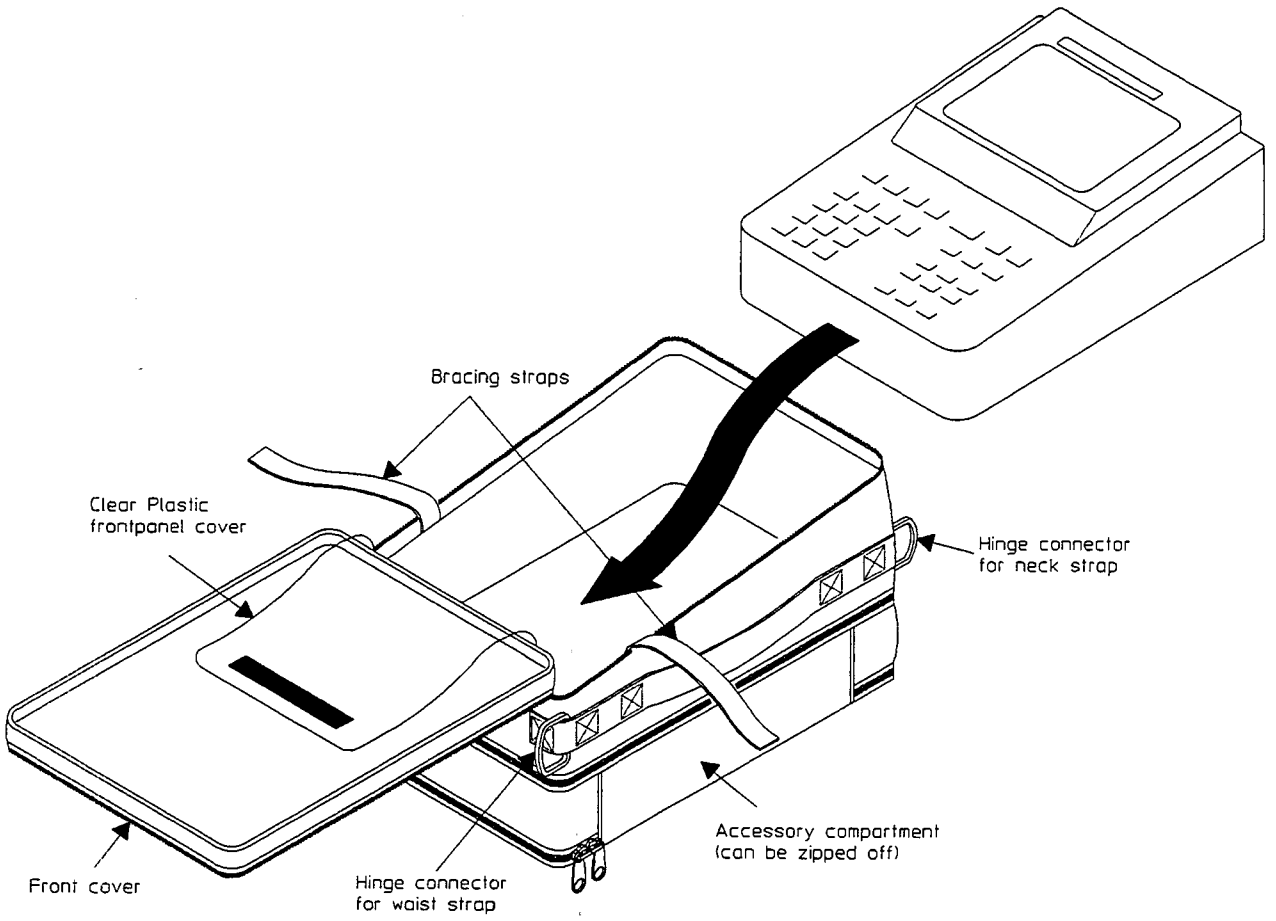

Figure 1-6.
Instrument Carrying Case Installation

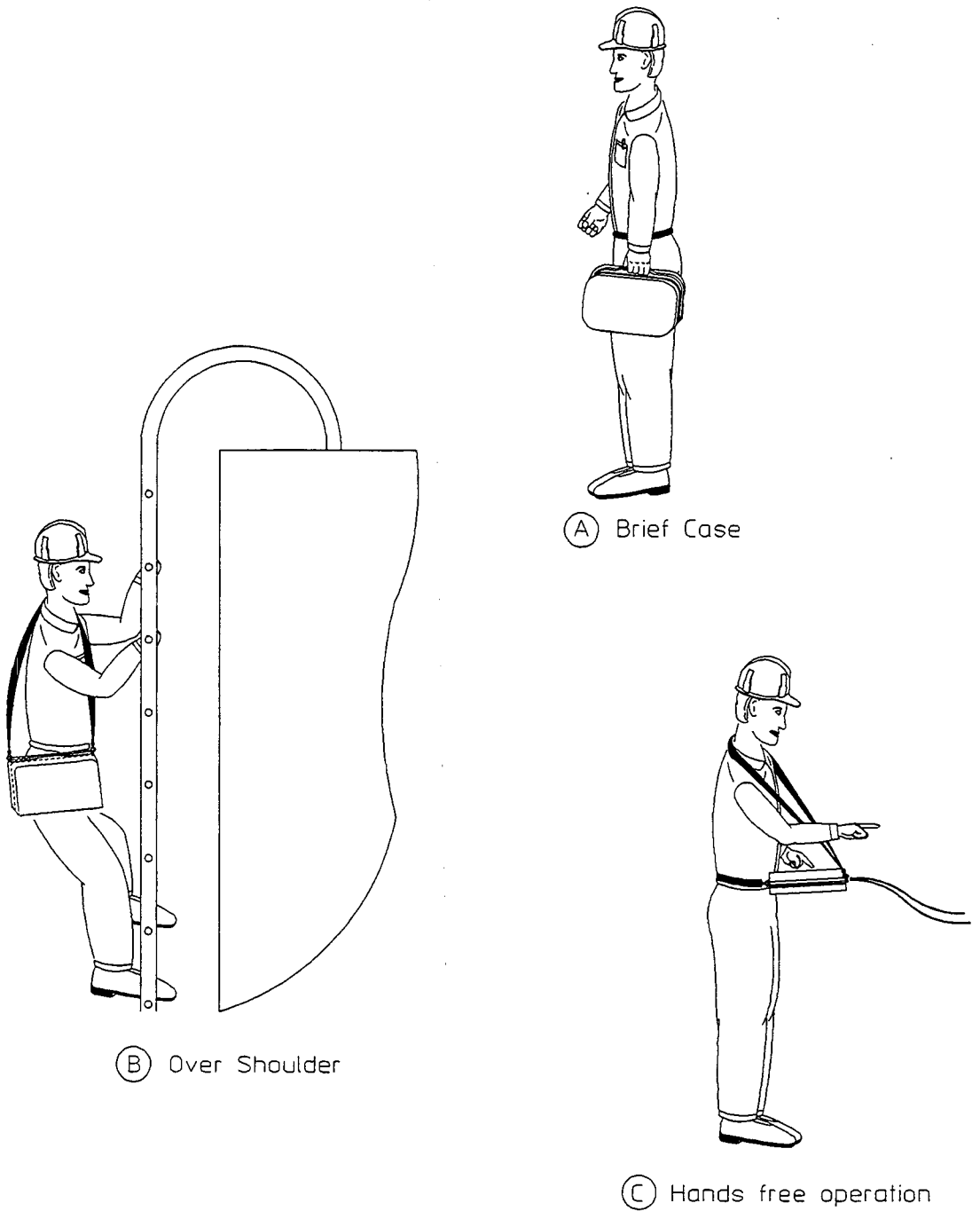

Figure 1-7.
Carrying case configurations

To clean the case exterior, use a mild soap and water solution and wipe with a clean rag.

Carrying Case Configurations

The carrying case has three configurations as shown in figure 1-7.

- Brief case configuration.
- Over-the-shoulder configuration.
- "Hands-free" operation configuration.

Obtain the configuration you want by arranging the neck and waist straps accordingly.

Brief Case Configuration Carry the instrument like a brief case. The neck and waist straps fit neatly in the accessory compartment. Transducers, light-weight cables, notes, and references like the *HP 3569A Quick Reference Guide* also fit in the accessory compartment. The small case size fits easily under an airplane seat.

Over-the-Shoulder Configuration When you need to climb or crawl to hard-to-reach places, use this configuration so both hands are free. Connect the neck strap to the connecting hinges on the stop side of the carrying case. Place it over your shoulder and adjust the strap to a convenient length.

Hands-Free Operation When you reach the measurement site, you can zip off the accessories compartment to make the case lighter and smaller. Adjust the neck strap to a convenient length so that you can easily operate the instrument in front of you. Connect one side of the waist strap to the hinge connector at the bottom of the carrying case. Pull the other end of the waist strap around your waist and connect it to the other hinge connector. Adjust the waist strap to fit snugly around your waist. Make the necessary connections to the device under test through the connector panel flap. This flap gives the HP 3569A connector panel extra protection. You are now ready to make measurements.

Turning on the HP 3569A

Press the [**ON**] key. The analyzer requires about 5 seconds to self-test while turning on.

For specific measurement information or other operating information, see the *HP 3569A Quick Start Guide,* the *HP 3569A Operator's Guide,* and the *HP 3569A Operator's Reference.*

Need Assistance?

If you need assistance, contact your nearest Hewlett-Packard Sales and Service Office listed in the HP Catalog, or contact your nearest regional office listed at the back of this guide. If you are contacting Hewlett-Packard about a problem with your HP 3569A Portable Real-Time Frequency Analyzer, please provide the following information:

- Model Number: HP 3569A
- Serial number:
- Options:
- Firmware version (listed when the analyzer first turns on):
- Date the problem was first encountered:
- Circumstances in which the problem was encountered:
- Can you reproduce the problem?
- What effect does this problem have on you?

Storage and Shipment

Storage

Store the analyzer in a clean, dry, and static free environment. For other requirements, see environmental specifications in chapter 2.

Shipment

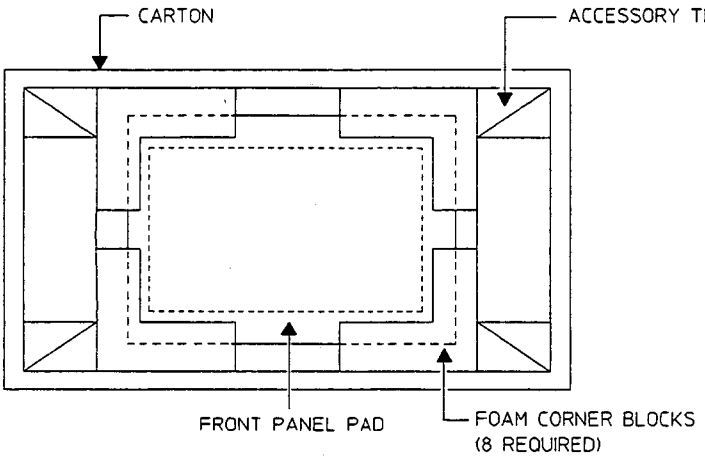

Figure 1-8.
Repacking for Shipment

- Containers and materials identical to those used in factory packaging are available through Hewlett-Packard offices, see figure 1-8. If the analyzer is being returned to Hewlett-Packard for service, attach a tag describing the type of service required, the return address, model number, and full serial number. Also, mark the container FRAGILE to ensure careful handling. In any correspondence, refer to the analyzer by model number and full serial number.

- If it is necessary to package the analyzer in a container other than original packaging, observe the following (use of other packaging is not recommended):
  - Protect the front panel with cardboard and wrap the analyzer in heavy paper or anti-static plastic.
  - Use a double-wall carton made of at least 350-pound test material and cushion the analyzer to prevent damage.
  - Identify the shipment as above and mark FRAGILE.

Caution

Do not use styrene pellets in any shape as packing material for the analyzer. The pellets do not adequately cushion the analyzer and do not prevent the analyzer from shifting in the carton. In addition, the pellets create static electricity that can damage electronic components.

Serial Numbers

Hewlett-Packard makes frequent improvements to its products to enhance their performance, usability, or reliability, and to control costs. HP service personnel have access to complete records for each instrument model, based on the equipment's serial number. Whenever you contact HP about your analyzer, have the complete serial number available to ensure obtaining the most complete and accurate information possible.

A serial number label is attached to the bottom of the analyzer. The serial number has two parts — the prefix (the first four numbers and a letter) and the suffix (the last five numbers).

Recommended Test Equipment

Table 1-2 lists the recommended equipment for the HP 3569A Performance Tests, Adjustments and Troubleshooting Procedures. The Performance Tests verify that the analyzer meets its published specifications. The following chapters give the procedures for these tests. The Adjustments and Troubleshooting Procedures are in the Service section of this manual. You may substitute other equipment for the recommended model if it meets or exceeds the listed critical specifications. If you make substitutions, you may have to modify the procedures to accommodate the different operating characteristics.

Table 1-2. Recommended Test Equipment

Instrument	Critical Specifications	Recommended Model	Test Type[4]
AC Calibrator	Amplitude Accuracy: ± 0.1%	Fluke[1] 5200A Fluke[1] 5700A Datron[2] 4200A	O, P, A
Frequency Synthesizer	Frequency Accuracy: ± 50 ppm Sweep time: 0.02 sec	HP 3326A HP 3325B HP 3325A HP 3324A	P, A
Low Distortion Oscillator	Total Harmonic Distortion: – 80 dBc (0.05%) Amplitude: 3.5 mV_{rms} to 3.5 V_{rms}	HP 339A B&K 1051	P
Digital Voltmeter	5 1/2 digit Input Impedance: ≥ 10 MΩ dc voltage: 1 V – 300 V ± 0.1%	HP 3455A Alternate: HP 3456A HP 3457A HP 3478A HP 3468A/B	P, A, T
Frequency Counter	Frequency Accuracy: ± 0.5 Hz at 32 kHz Input Impedance: 1 MΩ	HP 5316B	A
Feedthrough/Termination (2 required)	Impedance: 50Ω	HP 11048C HP 10100C Pomona[3] 4119-50	P,A
Feedthrough/Termination	Impedance: 600Ω	HP 11095A	P
BNC Cable (3 required)	24 inch, 50Ω	HP 8120-1840	P, A
BNC Tee (1 required)		HP 1250-0781	P,A
Adapter (1 required)	BNC to dual banana	HP 1250-1264 HP 1251-2277	P, A

[1]Fluke, Everett, WA 98206-9090
[2]Datron, Simi Valley, CA 93065 or Norwich UK NR6 6JB
[3]Pomona Electronics, Pomona, CA 91766
[4]O = Operation Verification, P = Performance Tests, A = Adjustments, T = Troubleshooting

Specifications

HP 3569A Real-Time Frequency Analyzer Specifications:

Input Characteristics

All inputs are single ended.

Preamplifier Input

Standard seven-pin female connector on instrument top panel to mate with LEMO FGG1B307 connectors.

Input Impedance:
1 MΩ (typical)

Input Ranges:
5 mV to 5 V peak. Analyzer automatically displays ranges and range selections in dBSPL as defined by the microphone sensitivity factor and dB reference (20 Pa).

Range Control:
Fixed input range or autorange. Autoranging occurs once at the start of a measurement. Input ranges can be incremented or decre-mented with the front panel controls during a measurement to clear overloads or maximize dynamic range.

Microphone Polarization:
0 V and 200 V

Power Supply:
+ 28 Vdc at 2 mA

Heater Voltage:
None

A-Weight Filter:
Conforms to IEC 651 Type 1. A-Weight; overall bands are calculated for both channels. Includes analog A-, C-, Linear- (8 Hz to 22.4 kHz at -3 dB), and Flat-, (0.5 Hz to 25.6 kHz at -3 dB) weighting functions on channel 1 and digitally applied A-weight filter on channel 2.

Direct Input

Two BNC inputs on instrument top panel.

Input Impedance:
1 MΩ (typical)

Coupling:
dc or ac coupling with -3 dB at 0.5 Hz (typical)

Frequency Range:
dc to 25.6 kHz

Noise Floor:
<–100 dBV/√Hz

A-Weight Filter:
Analog input A-weighting filter that meets IEC 651 Type 1 requirements.

ICP Accelerometer Input

Input Impedance:
1 MΩ (typical)

Frequency Range:
dc to 25.6 kHz

Noise Floor:
<–100 dBV/√Hz

Drive Current:
4 mA (typical)

Compliance Voltage:
22 V (typical)

Channel-to-Channel Match

12.8 kHz Span

Gain Match:

0% to 50% of span	0.1 dB
50% to 80% of span	0.2 dB

Phase Match:

40 to 250 Hz	0.017 degree
250 Hz to 6.3 kHz	f/14750 degree
6.3 to 8 kHz	1.1 degree

Other Spans Gain Match:

0% to 50% of span	0.1 dB
50% to 80% of span	0.2 dB

Phase Match:

0% to 50% of span	1.0 degree
50% to 80% of span	2.5 degree

Maximum Input Voltage:
100 volts (damage level)

Overload Detection
Overloads are detected in both the analog input circuits and in the digital processing circuits and reported via a front-panel indication. When the overloaded measurement is saved, the overload indication is saved with the data.

Crosstalk
Receiving channel Rs = 50 ohms:
90 dB (typical)

Anti-Alias Filter
Both inputs are protected with analog anti-alias filters. These filters provide at least 75 dB of stop band attenua-tion for all possible alias products and exceed the requirements of IEC 225 and ANSI S1.11.

Sampling Rate
65,536 kHz; 32,768 kHz; 16,384 kHz

Digital Signal Processing:
MC56002 24-bit processor running at 40 MHz clock rate.

Digital Filters

1/1-Octave Filters
One to 12 sixth-order Butterworth filters can be active simultaneously in real time. Center frequencies range from 2 Hz to 16 kHz. Center frequencies are given by,

$$CF = 1000 \times 2^{\left\lfloor \frac{n-30}{3} \right\rfloor},$$

where $n = 3, 6, 9, \ldots 36, 39, 42.$

These filters meet IEC 225, DIN 45651 and ANSI S1.11-1986, Order 6, Type 1-D requirements.

1/3-Octave Filters
Three to 36 third-order Butterworth filters can be active simultaneously in real time. Center frequencies range from 1.6 Hz to 20 kHz. Center frequencies are given by

$$CF = 1000 \times 2^{\left\lfloor \frac{n-30}{3} \right\rfloor},$$

where $2 \leq n \leq 43$.

These filters meet IEC 225, DIN 45651 and ANSI S1.11-1986, Order 3, Type 1-D requirements.

FFT Narrowband Filters (Option AY2)

Resolution:
100, 200, 400, 800 and 1600 lines of fixed-frequency bandwidth filters.

Window Functions:
Uniform, Hann, Flat Top, Force and Exponential windows are selectable for narrowband FFT measurements.

Parameters	Uniform	Hann	Flat Top
- 3 dB Bandwidth	0.25% of span	0.37% of span	0.90% of span
Noise Equivalent Bandwidth	0.25% of span	0.375% of span	0.955% of span
Window Flatness	+0, -4 dB	+0, -1.5 dB	+0, -0.01 dB
Shape Factor (-60 dB BW/-3 dB BW)	716	9.1	2.6

For 400 line resolution.

System Accuracy

Dynamic Range:
72 dB per ANSI S1.11-1986

Overall Frequency Response:
0.3 dB at filter centers. Meets or exceeds the measurement accuracy requirements of ANSI S1.11-1986 Order 3, Type 1-D; IEC 225; ANSI S1.4-1984; and IEC 651-1979 Type 1.

Noise

Minimum measurable SPL
(5 dB above noise floor):

1 kHz, 1/3-octave band	15 dB SPL
A-weight total power band	18 dB SPL
Linear total power band	20 dB SPL

Measured with 50 mV/pascal microphone per IEC 651.

Amplitude Linearity:

Meets or exceeds the requirements of IEC 225, IEC 804, and IEC 1043.

Frequency Accuracy and Stability:

± 0.02% without warm-up. No adjustments are necessary.

Pressure-Residual Intensity Index:

Meets IEC 1043 Class 1 processor requirements for minimum pressure-residual intensity index

Bands	Minimum pressure-residual intensity index
50 Hz	19 dB
63 Hz	20 dB
80 Hz	21 dB
100 Hz	22 dB
125 Hz	23 dB
160 Hz	24 dB
200 Hz	25 dB
250 Hz -6.3 kHz	26 dB
8 kHz	23 dB
10 kHz	20 dB

Measured with 25mm microphone separation, pink noise, 6000 s average.

Detectors

Control

Start:

Clears the average accumulator and starts an average.

Pause/Continue:

Temporarily suspends the averaging process. Averaging resumes when pressed again.

External Gate:

(Real-time octave and real-time intensity modes only) External TTL trigger signal gates the averaging process. Minimum external gate lengths are 15.625 ms for 20 kHz span, and 3.91 ms for 10 kHz and lower spans. Maximum gate length is 32,767 seconds.

Averaging Linear:

Linear integration times are user- selectable from 3.91 ms to 1 s in a binary sequence, and from 1 s to 32,767 s in 1 s steps.

Exponential:

Exponential time constants for exponential averaging from 3.9 ms to 16 s in a binary sequence.

Impulse:

Replaces overall band (L) with impulse measurements per IEC 651. Measurements of time-averaged overall A-level, L_{pA}, and overall llevel, L_{pAI}, are available simultaneously on Channel 1.

Triggering

Delay:

For linear averaging, 256 integration time periods for Level or Event triggering. For exponential averaging, 256 time step periods for Level or Event triggering.

Mode	Real-Time Octave	Real-Time Intensity	FFT	Reverb Time
Free run	Yes	Yes	Yes	Yes
Chan. 1 Level Trig.	Yes	No	No	No
Chan. 2 Level Trig.	Yes	No	No	No
Chan. 1 Event Trig., Chan. 2 Event Trig.	Yes	No	No	No
Ext. trig. (TTL)	Yes	Yes	Yes	No
Ext. start (TTL)	Yes	Yes	Yes	No
Ext. gate (TTL)	Yes	Yes	No	No
Chan. 1 Input	No	No	Yes	Yes
Chan. 2 Input	No	No	Yes	No

Spectrum Memory

Nonvolatile memory for up to 3000 single spectrum or multispectrum trace files. Standard MS-DOS file names with automatic increment feature for names ending in a numeric value.

Multispectrum Update Rate:
4 traces/second to the screen (typical)

Maximum Number of Spectrum:
1000 1/3-Octave, 3000 1/1-Octave spectra in measurement memory.

Maximum (Minimum) Hold:

Composite spectrum of maximum (or minimum) RMS level occurring in each band for each channel.

File Catalog:
3000 1/3-Octave, 9000 1/1-Octave spectra in nonvolatile RAM results storage.

Hardcopy Output

Direct support of HP LaserJet raster graphics output and HP-GL plotter control via RS-232. Plots/prints to file are possible using the Standard Data Format utilities included with each HP 3569A.

Display

Display Formats

A Only:
A single display of trace A.

B Only:
A single display of trace B.

A Above B:
In this mode, the display is split with trace A appearing above trace B.

A Front B:
In this mode, the two traces, A and B are overlaid for direct comparison.

Slice:
A time slice through the multispectrum measurement. The top trace is the instantaneous trace A measurement as defined in the DATA menu. The bottom display shows the time history (strip chart recorder) of the trace A data at the marker frequency.

Display Update:
Four per second for linear average, once per time step for exponential average.

A± B (lin):
This single display shows the results of subtracting (or adding) the linear voltage/pascal values of trace B from trace A. This is equiva-lent to subtraction (or addition).

A± B (dB):
This single display shows the results of subtracting (or adding) the dBSPL/Power values of trace B from trace A. This is equivalent to division (or multiplication).

Table:
Tabular output of the data values for both trace A and trace B sorted by either amplitude or frequency.

Y-Axis

Annotation:
Absolute or relative units (dB) with user-selectable dB reference.

Calibration Units:
User-selectable units of pascals (dBSPL), g, m/s, in/s, m, in, lbf, kgf, psi, EU and volts.

Y-Units:
Power, PSD

Scale Expansion:
The display scaling can be expanded using the arrow keys.

X-Axis

Linear/Log:
Linear and Log scaled X-axes are selectable.

Frequency Zoom/Scroll:
Display expansion, compression and scrolling is possible with the shifted function keys.

Slice Display:
Linear axis annotated with time for free run or time-stepped triggering. Annotation is in count for triggered measurements.

Other Input/Output

RS-232 Interface
Nine-pin male D-subminiature connector. EIA/TIA 562, EIA/TIA 574 38400, 19200, 9600, 4800, 2400 and 1200 baud.

Trigger Input:
TTL input (open collector) for use in triggering control. Switch contact to ground is sufficient for triggering.

Tape Recorder Output Signal:
When using the microphone connectors as inputs, the signal is amplified and output to the BNC connector for monitoring. Voltage gain is 25 for input ranges of 200 mV and below, and 1.0 for ranges above 200 mV. Output impedance is 4 kΩ.

Source Output:
Pseudo-random white and pink noise. Pseudo-random bit sequence length = 2^{31}-1. Nominal output level = 4 Vpeak with 0 to 30 dB of attenuation in 5 dB steps. Crest factor = 1.6:1 for white noise (typical) and 6.5:1 (typical) for pink noise.

Digital Input/Output:
15-pin female D-subminiature connector

Digital I/O Pinout:

"Measure" LEDPin	Use
1,7	Ground
2	"Overload" LED
5	Tape recorder control (open collector, 30 mA)
6	"Measure" LED

Environmental

Operating Temperature:
0 to 40 C

Storage Temperature:
-20 to 50 C

Humidity:
5% to 95% to 32 C, non-condensing

Electromagnetic Compatibility:
Complies with IEC 801-2 (ESD), IEC 801-3 (radiated immunity), and EN 55022 (radiated and conducted emissions).

Power Supply

Battery:
Rechargeable NiCd cells power the instrument for typically more than 4 hrs of continuous use.

Mains:
An ac adapter is included which will charge the battery during operation. This ac adapter is selected to be compatible with the mains power for the country from which the order is placed. If an external dc source is used, power consumption will be typically 8 to 14 V dc, 1.0 A max.

Memory Backup:
Lithium Battery provides 5 year backup. (Option to delete lithium battery available.) With lithium battery removed, memory backup is performed with internal, rechargeable NiCd battery used for instrument operation.)

Cabinet

Dimensions:
Length: 300 mm (11.5 in)

Width:
210 mm (8.25 in)

Height:
95 mm (3.75 in)

Weight:
3.2 kg (7 lb) including battery

Oper. Verif. and
Perf. Tests

HP 3569A Operation Verification Test

Operation Verification Test

A self-test runs every time you turn on the analyzer. However, the following procedure runs a more extensive self test and displays the results. The second part of this procedure is an optional microphone calibration measurement. If a microphone and calibrator are not available, an ac calibrator can be used as a signal source.

Equipment Required

Microphone (HP 35221A or similar)
Microphone pre-amplifier (HP 35224B or similar)
Microphone calibrator (HP 35229A or similar)

or,

AC Calibrator
3 BNC cables
1 BNC tee

Procedure

1. With the analyzer off, hold down the [7] key while pressing [On]. Keep holding down the [7] key for 5 seconds after releasing [On]. The analyzer will take approximately 20 seconds to perform the self test. If no error messages appear, the display should show the self test results. When the self tests are complete, a "Press ENTER to Continue" message appears.

   If there is a problem with a test, a message such as "ROM TEST (A2) FAILED" will appear. The "A2" indicates the suspected assembly. Refer to the Service section of this manual for instructions on troubleshooting. "ANALOG TEST (A3) FAILED" may appear when the A3 assembly is operating but requires adjustments. Refer to the Service section of this manual for adjustment procedures.

2. To set up for the microphone calibration measurement, press [Shift] [Off] to turn off the analyzer. Then connect the microphone and pre-amplifier assembly to the channel 1 microphone connector. If a microphone and calibrator are not available, skip to step 8.

3. Press the following keys on the HP 3569A:

   [On]
   [Inst Mode]
      Set [MODE SELECT] to [Realtime Octave]
      Move the cursor to [Do Preset] and press [Enter]
   [Input/Source] (press twice)
      Set INPUT 1 [Volts/EU:] to [(see text below)] [Enter]
      Set INPUT 2 [Volts/EU:] to [(see text below)] [Enter]
      Set [MIC POL] to [(depends on microphone)]
   [Format]
      Set [FORMAT] to [A Above B]
   [Start]

   The value to enter in the [Volts/EU] field is the microphone sensitivity in Volts per Pascal. For example, if the microphone sensitivity is 14 mV/Pa then enter [.014]. If the microphone sensitivity is expressed in dB relative to 1 V/Pa, then it must be converted to Volts/Pascal. -26 dB, for example, is 10 ^ (-26/20) or 0.05 Volts/Pa.

4. Place the microphone into the microphone calibrator and turn on the calibrator.

5. Wait 10 seconds for the microphone and pre-amplifier to stabilize, then press [Start] to auto-range the analyzer.

6. Press

   [Shift] [Mkr Pk]

   This moves the marker to the frequency band of the calibration signal and note the amplitude indicated at the top of the display. This value should be equal to the microphone calibrator amplitude, within the tolerance of the microphone, calibrator, and analyzer.

7. Move the microphone cable to the Input Channel 2 microphone connector.

   Press

   [Enter]

   This makes Trace B (Channel 2) active. Repeate steps 4 through 6 to test channel 2. This completes the operational verification test.

8. To use an ac calibrator, connect the calibrator output to the 3569A Input Channel 1 and Input Channel 2 BNC connectors using BNC cables and a BNC tee. Set the calibrator to output 1.0 Vrms at 1.0 kHz. Press

   [Inst Mode]

   Set [MODE SELECT] to [Realtime Octave]
   Move the cursor to [Do Preset] and press [Enter]

   [Input/Source] (press twice)

   Set INPUT 1 [Couple:] to [BNC dc]
   Set INPUT 2 [Couple:] to [BNC dc]

   [Format]

   Set [FORMAT] to [A Above B]

   [Start]

9. Press

   [Shift] [Mkr Pk]

   This moves the marker to the frequency band of the calibration signal and note the amplitude indicated at the top of the display. This value should be 120 dB SPL, +/- 0.3 dB SPL.

HP 3569A Performance Tests

#1 Turn On and Self Test

Procedure

1. With the analyzer off, hold down the [7] key while pressing [On]. Keep holding down the [7] key for 5 seconds after releasing [On]. The analyzer will take approximately 20 seconds to perform the self test. If no error messages appear, the display should show the self test results. When the self tests are complete, a "Press ENTER to Continue" message appears.

   If there is a problem with a test, a message such as "ROM TEST (A2) FAILED" will appear. The "A2" indicates the suspected assembly. Refer to the Service section of this manual for instructions on troubleshooting. "ANALOG TEST (A3) FAILED" may appear when the A3 assembly is operating but requires adjustments. Refer to the Service section of this manual for adjustment procedures.

2. Press [Enter] to display the Special Test menu. Press [Enter] again to restore normal operation.

#2 Residual DC Response Test

This test is only performed if the Narrowband FFT option AY2 is installed. If Option AY2 is not installed, proceed to Test #3, Noise and Spurious Signals Test.

This test measures the level of residual dc offset generated within the HP3569A. It verifies the Residual DC Response specification. If the test fails, suspect the A3 Analog assembly and refer to the Adjustments section of this manual for the A3 assembly.

Specification

Range	Scale
5 mV to 20 mV ranges:	<-10 dB relative to full scale
50 mV to 5 V ranges:	<-20 dB relative to full scale

Equipment Required

Equipment	Quanity
50 Ohm Feedthrough/Termination	2 each

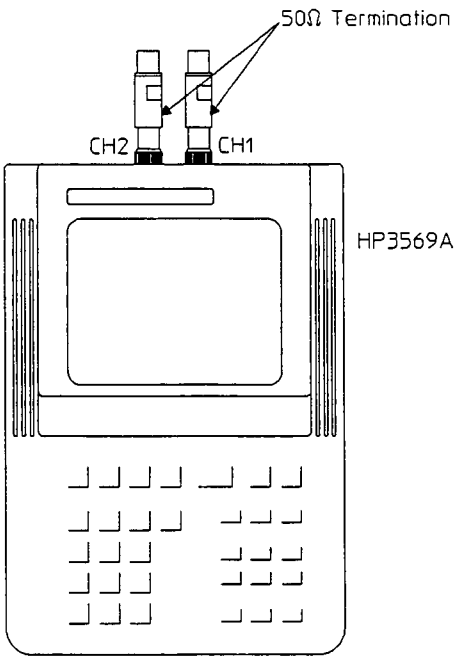

Figure 3-1. Test Setup

Procedure

1. Connect the 50 Ohm terminations to the Channel 1 and Channel 2 Input BNC connectors
2. Press the following keys:

   [Inst Mode]
   Set [MODE SELECT] to [Narrowband FFT]
   Move the cursor to [Do Preset] and press [Enter]
   [Input/Source]
   Set INPUT 1 [Y Units:] to [Volts]
   Set INPUT 1 [Couple:] to [BNC ac]
   Set INPUT 2 [Y Units:] to [Volts]
   Set INPUT 2 [Couple:] to [BNC ac]
   Set [RANGE 1] to [5 mV]
   Set [RANGE 2] to [5 mV]
   [Avg]
   Set [AVG MODE] to [RMS]
   Set [INCR UPD:] to [Off]
   [Format]
   Set [FORMAT] to [A Above B]
   [Start]

3. Move the marker to 0 Hz and record the amplitude for each channel.

   Test limit: <-59 dBV

4. Press

   [Input/Source]
   Set [RANGE 1] to [50 mV]
   Set [RANGE 2] to [50 mV]
   [Start]

5. Move the marker to 0 Hz and record the amplitude for each channel.

   Test limit: <-49 dBV

#3 Noise and Spurious Signals Test

The first part of this test is performed on all option configurations. The second part is only performed when Narrowband FFT option AY2 is installed.

This test measures the noise and spurious signals generated within the HP3569A. It verifies the "Minimum measurable SPL", "Noise Floor", and "Residual Responses" specifications, and verifies compliance with IEC 651 sec 6.6. If the test fails, suspect the A3 Analog assembly, cables or shields.

Specification

Minimum measurable SPL (5 dB above noise floor):

Range	Scale
1 kHz third octave band:	15 dB SPL
A-weighted total:	18 dB SPL
Flat (all-pass) total:	20 dB SPL

Narrowband FFT mode:

Range	Scale
Noise floor at 1 Hz:	<-100 dBV / sqrt(Hz)
Residual responses:	<-70 dB relative to full scale

Equipment Required

Equipment	Quanty
50 Ohm Feedthrough/Termination	2 each

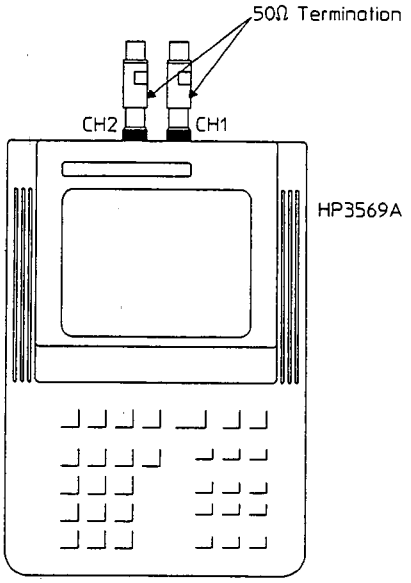

Figure 3-2. Test Setup

Procedure

1. Connect the 50 Ohm terminations to the Channel 1 and Channel 2 Input BNC connectors

2. Press the following keys to set up the noise floor measurement:

   [Inst Mode]

   Set [MODE SELECT] to [Realtime Octave]
   Move the cursor to [Do Preset] and press [Enter]

   [Freq]

   Set [CHANNELS] to [1]
   Set [STOP] to [(43) 20k]

   [Input/Source]

   Set [SPL RNG 1] to [70 dB]
   Set [SPL RNG 2] to [70 dB]
   Set INPUT 1 [Couple:] to [BNC DC]
   Set INPUT 2 [Couple:] to [BNC DC]

   [Trigger]

   Set MODE [Repeat:] to [Off]

   [Avg]

   Set [AVG MODE] to [Linear]
   Set AVG TIME [Integrat:] to [20.0] [Enter]
   Set AVG TIME [Count:] to [1] [Enter]

3. Press [Start] and wait 20 seconds for the measurement of the Channel 1 noise floor to complete.

4. Move the marker to the following bands and record their amplitudes:

Band:	1 kHz	"A"	"L"
Test limit:	<10 dB SPL	<13 dB SPL	<15 dB SPL

5. Press
   [Freq]
   Set [CHANNELS] to [2]
6. Press [Start] and wait 20 seconds for the measurement to complete.
7. Press [Enter] to select trace B, to display the Channel 2 noise floor.
8. Move the marker to the following bands and record their amplitudes:

Band:	1 kHz	"A"	"L"
Test limit:	<10 dB SPL	<13 dB SPL	<15 dB SPL

Note Complete the following steps only if the Narrowband FFT option AY2 is installed.

---

9. Press the following keys to set up the residual responses measurement:
   [Inst Mode]
   Set [MODE SELECT] to [Narrowband FFT]
   [Inst Mode] to return *without doing Preset*
   [Freq]
   Set [RESOLUTN] to [800 Line]
   [Avg]
   Set [AVG MODE] to [RMS]
   Set AVERAGE [Number:] to [16] [Enter]
   [Format]
   Set [FORMAT] to [A Above B]
10. Press [Start]. "P" will appear in the status line at the bottom of the screen when the measurement is complete. Press [Enter] to select Trace A (Channel 1), if necessary. Move the marker to the largest spurious response between 200 Hz and 20 kHz. Record the amplitude and frequency. Press [Enter] to select Trace B (Channel 2), move the marker to the largest spurious response between 200 Hz and 20 kHz, and record its amplitude and frequency.
    Test limit: 0 <dB SPL

11. Press the following keys to set up the 1 Hz noise floor measurement:

    [Freq]

    Set [BASEBAND] to [50 Hz]
    Set [RESOLUTN] to [200 Line]

    [Input/Source]

    Set INPUT 1 [Y Units:] to [Volts]
    Set INPUT 2 [Y Units:] to [Volts]

    [Data]

    Set [TRACE A] to [PSD Ch1]
    Set [TRACE B] to [PSD Ch2]

12. Press [Start] and wait for the measurement to complete. Press [Enter] to select Trace A (Channel 1), if necessary. Move the marker to 1 Hz, and record the amplitude. Press [Enter] to select Trace B (Channel 2), move the marker to 1 Hz, and record its amplitude and frequency.

    Test limit: <-100 dBV / sqrt(Hz)

#4 Amplitude Accuracy Test

The first part of this test is performed on all option configurations. The second part is only performed when Narrowband FFT option AY2 is installed.

This test measures the amplitude accuracy and flatness of the HP3569A. It verifies the "Absolute Amplitude Accuracy", "Band-to-band Flatness", and "A-weight and C-weight Frequency Responses" specifications, and verifies compliance with IEC 651 and IEC 225. If the test fails, suspect the A3 Analog assembly and refer to the Adjustments section of this manual for the A3 assembly.

Specification

Absolute Amplitude Accuracy:	
1 kHz full scale input:	+- 0.3 dB

Flatness:	
Band-to-band Flatness:	+- 0.3 dB

A-weight and C-weight filter:	
Flatness:	50% of IEC 651 type 1 limits

Equipment Required

Equipment	Quanity
AC Calibrator	1 each
BNC Tee	1 each
BNC cables	2 each
BNC(f) to Dual Banana Adapter	1 each

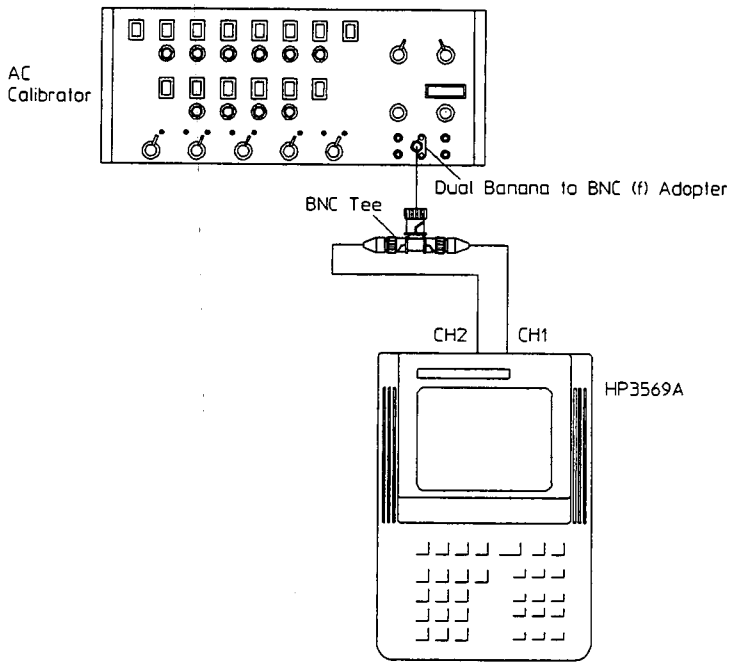

Figure 3-3. Test Setup

Procedure

1. Connect the ac calibrator to both Channel 1 and Channel 2 Input BNC connectors.
2. Set the ac calibrator as follows:

   Frequency: 1.0 kHz
   Amplitude: 10 mV rms

3. Press the following keys to set up the absolute accuracy measurement:

   [Inst Mode]
   Set [MODE SELECT] to [Realtime Octave]
   Move the cursor to [Do Preset] and press [Enter]
   [Freq]
   Set [CHANNELS] to [2]
   [Input/Source]
   Set INPUT 1 [Couple:] to [BNC dc]
   Set INPUT 2 [Couple:] to [BNC dc]
   [Format]
   Set [FORMAT] to [A Above B]

4. Press [Start], move the Trace A marker to 1 kHz, and record the Channel 1 amplitude. Then press [Enter] to select Trace B, and move the marker to 1 kHz and record the Channel 2 amplitude.

   Test limit: 79.7 dB SPL to 80.3 dB SPL

5. Change the ac calibrator amplitude to 1.0 V rms

6. Press [Start], and record the Channel 1 and Channel 2 amplitudes after the measurement completes.
   Test limit: 119.7 dB SPL to 120.3 dB SPL

7. To begin measuring flatness, change the ac calibrator frequency to 10 kHz.

8. Press [Freq] and then [Start], and move the Trace A and B markers to 10 kHz. For each Channel, record the difference between the reading and the values measured in step 6.
   Test limit: -0.3 dB to +0.3 dB

9. Change the ac calibrator frequency to 16 kHz

10. Press
    [Freq]
    Set [CHANNELS] to [1]
    Set [START] to [(11) 12.5]
    Set [STOP] to [(43) 20k]

11. Press [Start], and move the Trace A marker to 16 kHz, and record the difference between the reading and the value measured in step 6.
    Test limit: -0.3 dB to +0.3 dB

12. Change the ac calibrator frequency to 20 kHz

13. Press [Freq] and then [Start], and then move the Trace A marker to 20 kHz, and record the difference between the reading and the value measured in step 6.
    Test limit: -0.3 dB to +0.3 dB

14. To set up for measuring the response of the C-weight filter, press
    [Input/Source]
    Set INPUT 1 [Weight:] to [C]
    [Start]

15. Change the ac calibrator frequency to 20 Hz. Press [Start] to autorange. Move the Trace A marker to 20 Hz and record the amplitude.

16. Repeat the previous step for each of the frequencies listed in the table.

Frequency	Test Limit
20 Hz	112.3 to 115.3 dB SPL
100 Hz	119.2 to 120.2 dB SPL
4 kHz	118.7 to 119.7 dB SPL
20 kHz	103.8 to 110.3 dB SPL

17. To set up for measuring the response of the A-weight filter, press
    [Input/Source]

Set INPUT 1 [Weight:] to [A]

18. Change the ac calibrator frequency to 20 Hz. Press [Start]. Move the Trace A marker to the same frequency and record the amplitude.

19. Repeat the previous step for each of the frequencies listed in the table.

Frequency	Test Limit
20 Hz	68.0 to 71.0 dB SPL
100 Hz	100.4 to 101.4 dB SPL
4 kHz	120.5 to 121.5 dB SPL
20 kHz	105.7 to 112.2 dB SPL

Note Complete the following steps only if the Narrowband FFT option AY2 is installed.

20. To set up for measuring Narrowband FFT amplitude accuracy and flatness, press:

[Inst Mode]
Set [MODE SELECT] to [Narrowband FFT]
Move the cursor to [Do Preset] and press [Enter]
[Freq]
Set [BASEBAND] to [2 kHz]
Set [WINDOW] to [Flattop]
[Input/Source]
Set [SPL RNG 1] to [130 dB]
Set [SPL RNG 2] to [130 dB]
Set INPUT 1 [Couple:] to [BNC dc]
Set INPUT 2 [Couple:] to [BNC dc]
[Format]
Set [FORMAT] to [A Above B]
[Start]

21. Change the ac calibrator to: Frequency: 1.6 kHz, Amplitude: 1.0 Vrms. Move the Trace A and B markers to 1.6 kHz and record the amplitude for each channel.
Test Limit: 119.4 to 120.6 dB SPL

22. Press:

[Freq]
Set [BASEBAND] to [200 Hz]
[Start]

23. Change the ac calibrator to: Frequency: 160 Hz, Amplitude: 1.0 Vrms. Move the Trace A and B markers to 160 Hz and record the amplitude for each channel.
    Test Limit: 119.4 to 120.6 dB SPL
    To set up for measuring amplitude accuracy of a zoomed measurement, press:
    [Freq]
        Set ZOOM [Zoom:] to [On]
        Set ZOOM [Center:] to [20000] [Enter]
        Set ZOOM [Span:] to [1kHz]
    [Start]

24. Change the ac calibrator frequency to: 19600 Hz. Use [Shift] [Mkr Pk] to move the Trace A and B markers to the peak signal and record the amplitude for each channel.
    Test Limit: 119.0 to 121.0 dB SPL

#5 Amplitude Linearity Test

Note This test is performed on all option configurations.

This test measures the amplitude linearity of the HP3569A. It verifies the "Linearity Range", and "Amplitude Linearity" specifications, and verifies compliance with IEC 651 and IEC 225. If the test fails, suspect the A3 Analog assembly and refer to the Adjustments section of this manual for the A3 assembly.

Specification

Octave mode:	
0 to -40 dBfs:	+- 0.2 dB
-40 to -45 dBfs:	+- 0.7 dB
-45 to -50 dBfs:	+- 0.7dB*
-50 to -60 dBfs:	+- 0.7dB*
-60 to -65 dBfs:	+- 6.0 dB

Equipment Required

Equipment	Quanity
AC Calibrator	1 each
BNC Tee	1 each
BNC cables	2 each
BNC(f) to Dual Banana Adapter	1 each

* See backdating

See Change
pg. 7-2

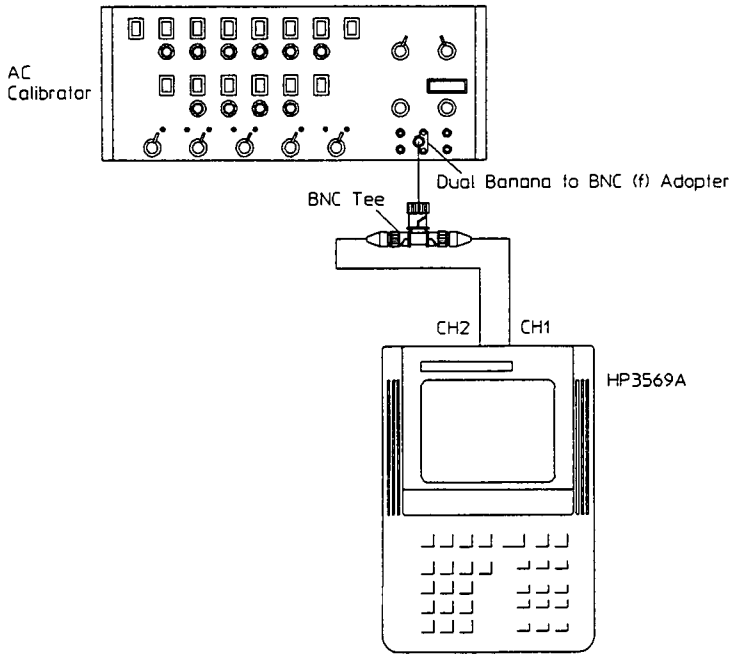

Figure 3-4. Test Setup

Procedure

1. Connect the ac calibrator to both Channel 1 and Channel 2 Input BNC connectors.
2. Set the ac calibrator as follows:

   Frequency: 1.0 kHz
   Amplitude: 1.0 V rms

3. Press the following keys to set up the amplitude linearity measurement:

   [Inst Mode]
   Set [MODE SELECT] to [Realtime Octave]
   Move the cursor to [Do Preset] and press [Enter]
   [Freq]
   Set [CHANNELS] to [2]
   [Input/Source]
   Set [SPL RNG 1] to [130 dB]
   Set [SPL RNG 2] to [130 dB]
   Set INPUT 1 [Couple:] to [BNC dc]
   Set INPUT 2 [Couple:] to [BNC dc]
   [Trigger]
   Set MODE [Repeat:] to [Off]
   [Avg]
   Set [AVG MODE] to [Linear]
   Set AVG TIME [Integrat:] to [5.0] [Enter]
   Set AVG TIME [Count:] to [1] [Enter]

[Format]

Set [FORMAT] to [A Above B]

4. Press [Start], and move the Trace A and B markers to measure the Channel 1 and Channel 2 amplitudes. Record the MARKER VALUES. Calculate the difference from 120 dB SPL.
   recorded value = (measured) - 120.0

see backdating →

Ac Calibrator	Test Limit
31.62 mV	89.8 to 90.2 dB SPL
10.00 mV	79 ~~79.3 to 80.7~~ dB SPL* 81
3.162 mV	67.5 ~~69.3 to 70.7~~ dB SPL* 72.5
1.778 mV	59.0 to 71.0 dB SPL

* See Backdating

5. Change the ac calibrator amplitude to the first value in the table (31.62 mV). Record the MARKER VALUES for both A and B Traces.For both trace A and B, subtract the values recorded in step 4 from the marker reading, and enter the result on the test record.

6. Repeat the previous step for the remaining three ac calibrator amplitudes.

#6 Anti-Alias Filter Test

Note This test is performed on all option configurations.

This test measures the ability of the anti-alias filters to reject frequencies which may cause aliasing. Using a frequency synthesizer, a signal known to cause an alias frequency is input into the HP3569A. A measurement is done to determine how well the alias frequency is rejected. It verifies the "Alias response" specifications, and verifies compliance with IEC 225. If the test fails, suspect the A3 Analog assembly and refer to the Adjustments section of this manual for the A3 assembly.

Specification

Alias Responses	<-70 dB relative to full scale

Equipment Required

Equipment	Quanity
AC Calibrator or synthesizer	1 each
BNC Tee	1 each
BNC cables	2 each
BNC(f) to Dual Banana Adapter (if ac Calibrator is used)	1 each
50 Ohm Feedthrough Terminator	1 each

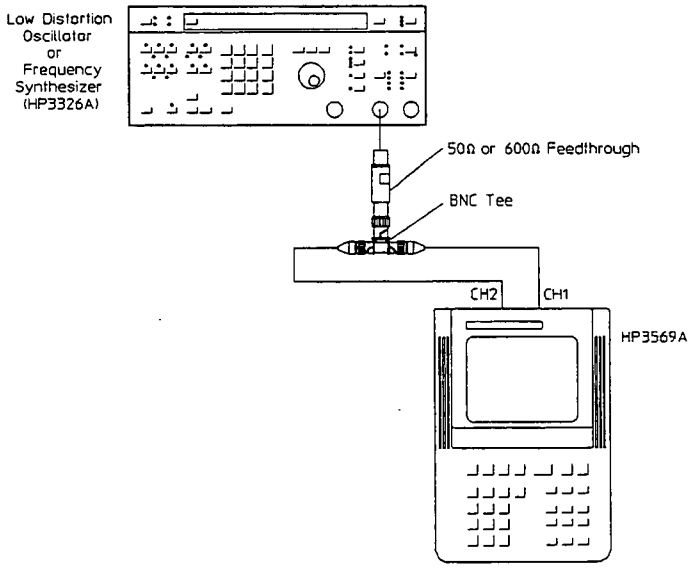

Figure 3-5. Test Setup

Procedure

1. Connect the ac calibrator to both Channel 1 and Channel 2 Input BNC connectors.

2. Set the ac calibrator as follows:

   Frequency: 22.768 kHz
   Amplitude: 1.0 V rms

3. Press the following keys to set up the measurement:

   [Inst Mode]
   Set [MODE SELECT] to [Realtime Octave]
   Move the cursor to [Do Preset] and press [Enter]
   [Freq]
   Set [CHANNELS] to [2]
   [Input/Source]
   Set [SPL RNG 1] to [120 dB]
   Set [SPL RNG 2] to [120 dB]
   Set INPUT 1 [Couple:] to [BNC dc]
   Set INPUT 2 [Couple:] to [BNC dc]
   [Trigger]
   Set MODE [Repeat:] to [Off]
   [Avg]
   Set [AVG MODE] to [Linear]
   Set AVG TIME [Integrat:] to [20.0] [Enter]
   Set AVG TIME [Count:] to [1] [Enter]
   [Format]
   Set [FORMAT] to [A Above B]

4. Press [Start], and move the Trace A and B markers to the 10 kHz band and record the Channel 1 and Channel 2 amplitudes.

   Test limit: <50 dB SPL

#7 Harmonic Distortion Test

The first part of this test is performed on all option configurations. The second part is only performed when Narrowband FFT option AY2 is installed.

This test measures the harmonic distortion generated in the HP3569A. It verifies the "Harmonic Distortion", and "Filter Dynamic Range" specifications, and verifies compliance with ANSI S1.11. If the test fails, suspect the A3 Analog assembly.

Specification

Octave mode:	
Filter Dynamic Range:	>72 dB

Narrowband (FFT) mode:	
Harmonic Distortion:	<-65 dB relative to full scale

Equipment Required

Equipment	Quanity
Low-distortion oscillator (-80 dBc distortion at 10 kHz)	1 each
600 Ohm Feedthrough/termination	1 each
BNC Tee	1 each
BNC cables	2 each
BNC(f) to Dual Banana Adapter	1 each

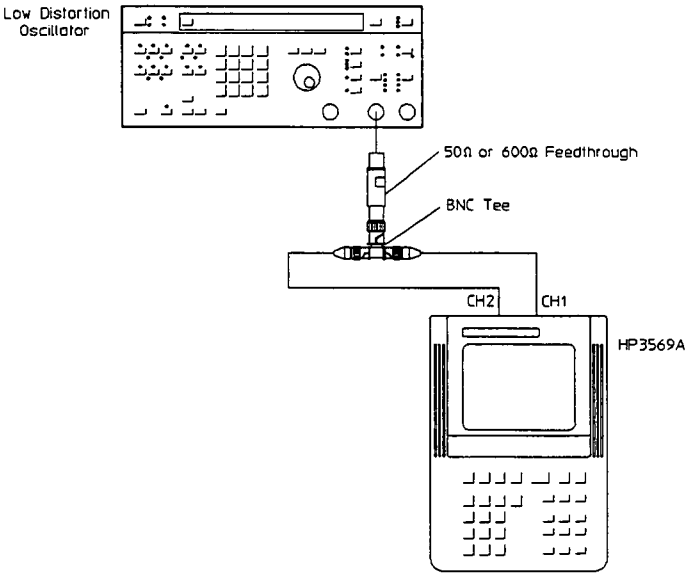

Figure 3-6. Test Setup

Procedure

1. Connect the oscillator to both Channel 1 and Channel 2 Input BNC connectors, using a 600 Ohm Feedthrough/termination.

2. Set the oscillator as follows:

   Frequency: 2.5 kHz
   Amplitude: 25 mV rms

3. Press the following keys to set up the octave filter dynamic range measurement:

   [Inst Mode]
   Set [MODE SELECT] to [Realtime Octave]
   Move the cursor to [Do Preset] and press [Enter]
   [Freq]
   Set [CHANNELS] to [2]
   [Input/Source]
   Set [SPL RNG 1] to [90 dB]
   Set [SPL RNG 2] to [90 dB]
   Set INPUT 1 [Couple:] to [BNC dc]
   Set INPUT 2 [Couple:] to [BNC dc]
   [Trigger]
   Set MODE [Repeat:] to [Off]
   [Avg]
   Set [AVG MODE] to [Linear]
   Set AVG TIME [Integrat:] to [20.0] [Enter]
   Set AVG TIME [Count:] to [1] [Enter]
   [Format]
   Set [FORMAT] to [A Above B]

4. Press [Start] and wait 20 seconds for the measurement to complete. The display should show a full scale signal at 2.5 kHz. If the reading is not within 1 dB of 88 dB SPL, adjust the oscillator amplitude and press [Start] again.

5. For both Trace A and B (Channels 1 and 2), move the marker to the largest band between 25 Hz and 630 Hz, and record its amplitude and frequency.
   Test limit: <18 dB SPL

6. For both Trace A and B (Channels 1 and 2), move the marker to the 10 kHz band, and record its amplitude.
   Test limit: <18 dB SPL

Note Complete the following steps only if the Narrowband FFT option AY2 is installed.

7. To set up for measuring Narrowband FFT 2nd harmonic distortion, change the low-distortion oscillator to
   Frequency: 9.6 kHz
   Amplitude: 2.5 mVrms

8. To set up for measuring Narrowband FFT harmonic distortion, press:
   [Inst Mode]
      Set [MODE SELECT] to [Narrowband FFT]
      [Inst Mode] to return *without doing Preset*
   [Freq]
      Set [RESOLUTN] to [400 Line]
      Set [WINDOW] to [Flattop]
   [Input/Source]
      Set [SPL RNG 1] to [70 dB]
      Set [SPL RNG 2] to [70 dB]
   [Avg]
      Set [AVG MODE] to [RMS]
   [Start]

9. When the measurement is complete, "P r10" will appear in the status line at the bottom of the screen, and the display should show a 68 dB SPL (+-1 dB) signal at 9.6 kHz. If necessary, adjust the oscillator amplitude and frequency, and press [Start] again, until the response is at 9.6 kHz.

10. Move the Trace A and B (Channel 1 and 2) markers to 19.2 kHz, and record the amplitude.
    Test limit: <5 dB SPL

11. To set up for measuring 3rd harmonic distortion, change the oscillator to:
    Frequency: 6.4 kHz

12. Press [Start]. When the measurement is complete, the display should show a signal at 6.4 kHz. If necessary, adjust the oscillator frequency. Record the Trace A and B amplitudes at 19.2 kHz
    Test limit: <5 dB SPL

#8 Noise Source Test

Note This test is performed on all option configurations.

This test measures the amplitude and flatness of the HP3569A noise source. It verifies the "Amplitude Range", and "Flatness" specifications. If the test fails, suspect the A4 Noise Source assembly.

Specification

Noise source flatness:	+- 1.0 dB

Equipment Required

Equipment	Quanity
BNC cable	1 each
600 Ohm feedthrough/termination	1 each

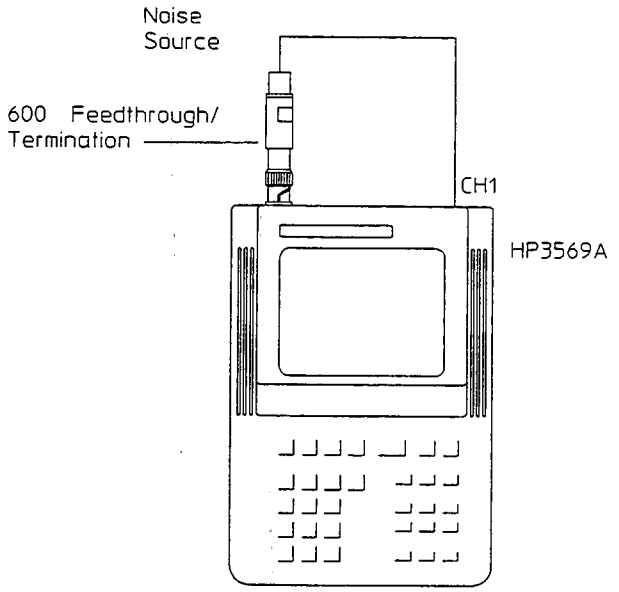

Figure 3-7. Test Setup

Procedure

1. Connect the Noise Source BNC to the Channel 1 Input BNC, using a 600 Ohm feedthrough/termination.

2. Press the following keys:

   [Inst Mode]
   Set [MODE SELECT] to [Realtime Octave]
   Move the cursor to [Do Preset] and press [Enter]
   [Freq]
   Set [CHANNELS] to [1]
   Set [START] to [(11) 12.5]
   Set [STOP] to [(43) 20k]
   [Input/Source]
   Set [SPL RNG 1] to [130 dB]
   Set INPUT 1 [Couple:] to [BNC ac]
   Set [SOURCE] to [Pink]
   Set [ATTENUATE] to [5 dB]
   [Trigger]
   Set MODE [Repeat:] to [Off]
   [Avg]
   Set [AVG MODE] to [Linear]
   Set AVG TIME [Integrat:] to [60.0] [Enter]
   Set AVG TIME [Count:] to [1] [Enter]
   [Start]

3. Wait 60 seconds for the measurement to complete. Move the marker to the 1 kHz band and record the amplitude.
   Test limit: 90 to 100 dB SPL

4. Use the marker to find and record the minimum and maximum amplitude between 20 Hz and 20 kHz. Subtract the minimum reading from the maximum reading and record the difference.
   Test limit: <2.0 dB

#9 Amplitude and Phase Match Test

Note This test is only performed when Narrowband FFT option AY2 is installed.

This test measures the amplitude and phase match between channels 1 and 2. It verifies the "Cross Channel Accuracy" specifications, and checks external trigger operation. If the test fails, suspect the A3 Analog assembly and refer to the Adjustments section of this manual for the A3 assembly.

Specification

Amplitude match:	
0 to 50% of span:	0.1dB
50 to 80% of span:	0.2 dB

Phase match:	
0 to 50% of span:	1 deg
50 to 80% of span:	2.5 deg

Equipment Required

Equipment	Quanity
Synthesizer	1 each
BNC Tee	1 each
BNC Barrel	1 each
BNC 50 ohm Feedthrough/Termination	1 each
BNC cables	3 each

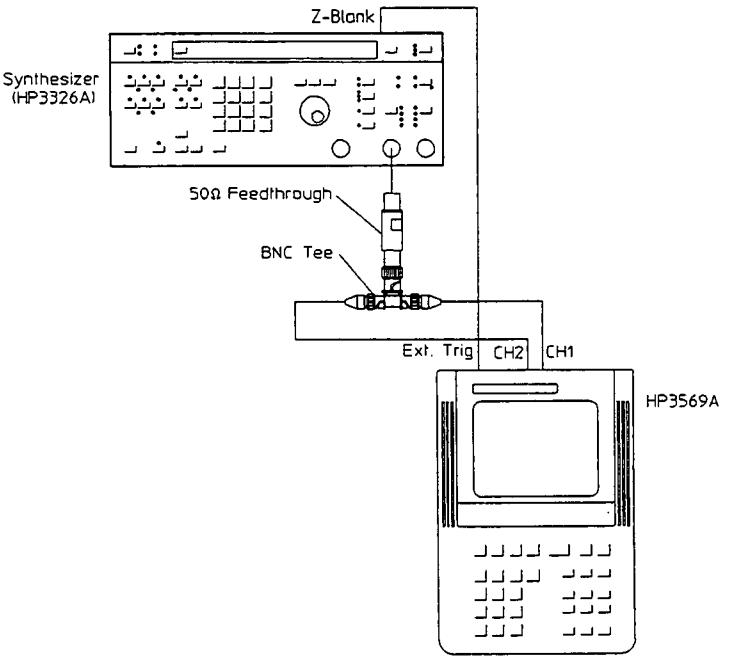

Figure 3-8. Test Setup

Procedure

1. Connect the synthesizer to both Channel 1 and Channel 2 Input BNC connectors, using a 50 Ohm Feedthrough/termination. Connect the synthesizer Z-BLANK output to the External Trigger input of the HP 3569A using a BNC cable.

2. Set the synthesizer to output a continuously swept sine wave as follows:

   Amplitude: 1.0 Vrms
   Start Frequency: 0 Hz
   Stop Frequency: 25 kHz
   Sweep Time: 0.04 seconds
   Start Continuous sweep

3. Press the following keys on the HP 3569A:

   [Inst Mode]
   Set [MODE SELECT] to [Narrowband FFT]
   Move the cursor to [Do Preset] and press [Enter]
   [Freq]
   Set [RESOLUTN] to [800 Line]
   Set [WINDOW] to [Uniform]
   [Input/Source]
   Set [SPL RNG 1] to [130 dB]
   Set [SPL RNG 2] to [130 dB]
   Set INPUT 1 [Couple:] to [BNC dc]
   Set INPUT 2 [Couple:] to [BNC dc]

[Trigger]
Set [SOURCE] to [External]
Set MODE [Repeat] to [Off]
Set POINT [Slope] to [Positive]
[Avg]
Set [TYPE] to [RMS]
[Data]
Set [TRACE A] to [Freq Resp]
Set [TRACE B] to [Freq Resp]
[Format]
Set [FORMAT] to [A Above B]
[Start]

4. When the measurement is complete, move the marker to the frequency values listed in the table and record the amplitudes and phases.

Trace	Frequency	Test Limit
A	10 kHz	-0.1 dB to +0.1 dB
A	16 kHz	-0.2 dB to +0.2 dB
B	10 kHz	-1.0 deg to +1.0 deg
B	16 kHz	-2.5 deg to +2.5 deg

5. Change the synthesizer settings as follows:
   Stop Frequency: 2.5 kHz
   Sweep Time: 0.4 sec

6. Press the following keys on the HP 3569A:
   [Freq]
   Set [BASEBAND] to [2 kHz]
   [Start]

7. When the measurement is complete, move the marker to the frequency listed in the table and record the amplitudes and phases.

Trace	Frequency	Test Limit
A	1.0 kHz	-0.1 dB to +0.1 dB
A	1.6 kHz	-0.2 dB to +0.0 dB
B	1.0 kHz	-1.0 deg to +1.0 deg
B	1.6 kHz	-2.5 deg to +2.5 deg

#10 Frequency Accuracy Test

Note This test is only performed when Narrowband FFT option AY2 is installed.

This test measures the frequency accuracy of the HP 3569A using a frequency synthesizer. It verifies the "Frequency Accuracy" specifications. If the test fails, suspect the A2 Main Processor assembly.

Specification

Frequency accuracy:	+- 0.02 %

Equipment Required

Equipment	Quanity
Synthesizer	1 each
BNC cables	1 each
50 Ohm Feedthrough/termination	1 each

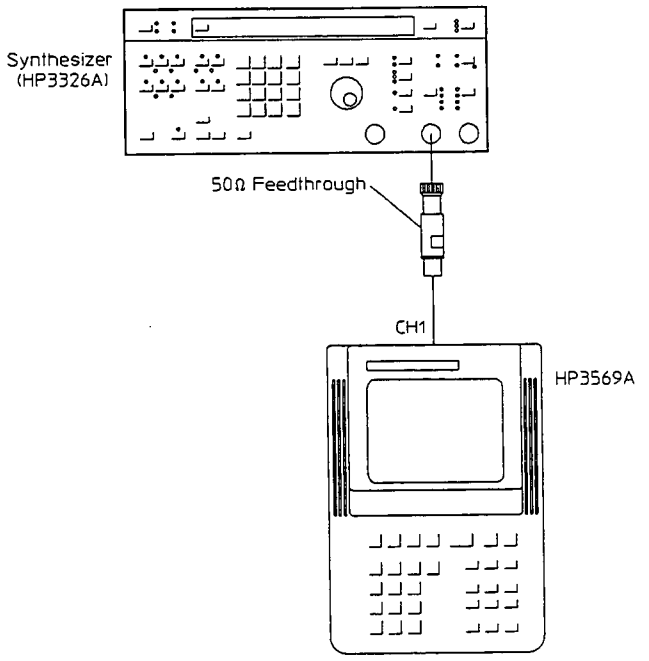

Figure 3-9. Test Setup

Procedure

1. Connect the synthesizer to the HP 3569A's Channel 1 Input BNC connector, using a 50 Ohm Feedthrough/termination.

2. Set the synthesizer to output a sine wave as follows:

   Amplitude: 1.0 Vrms
   Frequency: 10 kHz
   Sweep: off

3. Press the following keys on the HP 3569A:

   [Inst Mode]

   Set [MODE SELECT] to [Narrowband FFT]
   Move the cursor to [Do Preset] and press [Enter]

   [Freq]

   Set ZOOM [Zoom:] to [On]
   Set ZOOM [Center:] to [10000] [Enter]
   Set ZOOM [Span:] to [500 Hz]
   Set [RESOLUTN] to [800 Line]

   [Input/Source]

   Set INPUT 1 [Couple:] to [BNC ac]

   [Start]

4. After the measurement starts, press

   [Shift] [Mkr Pk] and record the marker frequency.

   Test limit: 9998.0 Hz to 10002.0 Hz

#11 Transducer Power Supply Test

Note This test is performed on all option configurations.

This test measures the microphone pre-amplifier power supply voltages, and the ICP accelerometer current output by the HP 3569A. If the test fails, suspect the A4 Noise Source, A2 Main Processor, or A3 Analog Assemblies.

Specification

Polarization Voltage Accuracy	+- 6 %
28 V Accuracy	+- 15 %

Equipment Required

Equipment	Quanity
Digital Voltmeter (need 1000 V range with 10 Meg Ohm +-1% input impedance)	1 each
50 Ohm Feedthrough/termination	2 each
7-pin Microphone connector (LEMO part number FGG.1B307CLC) (optional)	1 each

Procedure

1. Connect the 50 Ohm terminations to the Channel 1 and Channel 2 Input BNC connectors
2. Press the following keys on the HP 3569A:

[Inst Mode]
Set [MODE SELECT] to [Realtime Octave]
Move the cursor to [Do Preset] and press [Enter]
[Input/Source]
Set INPUT 1 [Couple:] to [BNC ICP]
Set INPUT 2 [Couple:] to [BNC ICP]
Set [MIC POL] to [200 V]
[Start]

3. To check the ICP accelerometer current, use the digital voltmeter to measure the voltage at the 50 Ohm feedthrough/termination connected to the Channel 1 input. Repeat this measurement on channel 2, and record both values.
   Test limit: 0.15 V to 0.25 V

4. To check the +28 Volt microphone pre-amplifier power, use the digital voltmeter to measure between the instrument ground (any BNC shell) and pin 5 of the Channel 1 microphone connector. Pin 5 is at the 3 o'clock position, and can be probed directly. See the connector diagram on the bottom of the 3569A. Optionally, use a 7-pin LEMO microphone plug to make an adapter. Record the voltage for channel 1 and channel 2.
   Test limit: 25 V to 32 V

5. To check the +200 Volt microphone polarization voltage, use the digital voltmeter to measure between the instrument ground (and BNC shell) and pin 3 of the Channel 1 microphone connector. Pin 3 is at the 7 o'clock position, and can be probed directly. Optionally, use a 7-pin LEMO microphone plug to make an adapter. Because the +200 Volt polarization voltage has an output impedance of 10 Meg Ohm, and the input impedance of the digital voltmeter is 10 Meg Ohm, the measured value will be about 100 Volts. Set the voltmeter to the 200V range (or more), and turn Auto-cal off. Record the voltage for channel 1 and channel 2
   Test limit: 94 to 106 Volts

6. To switch off the transducer power supplies, press the following keys on the HP 3569A:
   [Inst Mode]
   Set [MODE SELECT] to [Realtime Octave]
   Move the cursor to [Do Preset] and press [Enter]

#12 Pressure-Residual Intensity Index Test

Note This test is performed when Real-Time Intensity measurements are installed

This test measures the P-I Index of the HP3569A. The P-I Index is the difference between sound pressure level and intensity level, when the same signal is applied to both channels. P-I Index is a measure of the phase match between channels. This test verifies the "Pressure-residual Intensity Index" specification, and verifies compliance with IEC 1043. If the test fails, suspect the A3 Analog assembly and refer to the Adjustments section of this manual for the A3 assembly.

Equipment Required

Equipment	Quanity
BNC cables	2 each
BNC Tee	1 each

Procedure

1. Connect the HP 3569A's Noise Source BNC to the Channel 1 and Channel 2 Input BNC connectors.
2. Press the following keys:

[Inst Mode]
Set [MODE SELECT] to [Realtime Intensity]
Move the cursor to [Do Preset] and press [Enter]
[Input/Source]
Set [SPL RANGE] to [130 dB]
Set INPUT [Couple:] to [BNC ac]
Set INTENSITY [Mic Sep:] to [25] [Enter]
Set [SOURCE] to [Pink]
Set [ATTENUATE] to [10 dB]
[Trigger]
Set MODE [Repeat:] to [Off]
[Avg]
Set [AVG MODE] to [Linear]
Set AVG TIME [Integrat:] to [1000] [Enter]
Set AVG TIME [Count:] to [1] [Enter]
[Data]
Set [TRACE A] to [P-I Index]
[Start]

3. Wait 17 minutes for the measurement to complete. Move the marker to each band listed in the table and record the P-I index.

Frequency Band	Test Limit
100 Hz	>22 dB
125 Hz	>23 dB
160 Hz	>24 dB
200 Hz	>25 dB
250 Hz to 6.3 kHz	>25 dB
8 kHz	>23 dB
10 kHz	>20 dB

Test Record

3569A Performance Test Record

Calibration Entity and Address: _____

_____

Test Performed by: _____

Report Number: _____

Customer: _____

Test Date: _____

Temperatue and Humidity: _____

Test Equipment:

Equipment	Model	Serial Number	Cal Due Date
Synthesizer			
AC Calibrator			
Low Dist. Oscillator			
Digital Voltmeter			

Measurement Uncertainty:

Trace: _____ Report Number: _____ Test Date:_____

Test	Using Recommended Equipment	Using Other Equipment
1. Turn On and Self Test	NA (internal test)	NA (internal test)
2. Residual DC Response	NA (internal test)	NA (internal test)
3. Noise and Spurious Signals	NA (internal test)	NA (internal test)
4. Amplitude Accuracy	1000ppm+10uV, or 17 : 1	
5. Amplitude Linearity	10.1uV, or 6.8 : 1	
6. Anti-Alias Filter	0.8 dB, 10 :1	
7. Harmonic Distortion	-80 dBc, 4 : 1	
8. Noise Source	0.3 dB deviation, or 6.6 : 1	6.6 : 1
9. Amplitude and Phase Match	NA (internal test)	NA (internal test)
10. Frequency Accuracy	5 ppm, or 10 : 1	
11. Transducer Power Supply	1%, or 6 : 1	
12. Pressure-Residual Intensity Index	NA (internal test)	NA (internal test)

#1 Turn On and Self Test

Pass ____ Fail ____

#2 Residual DC Response Test

Range	Channel	Measured	Test Limit
5 mV	1 (Trace A)		<-59 dBV
5 mV	2 (Trace B)		<-59 dBV
50 mV	1 (Trace A)		<-49 dBV
50 mV	2 (Trace B)		<-49 dBV

#3 Noise and Spurious Signals Test

Real-time Octave noise floor

Channel	Band	Measured	Test Limit
1 (Trace A)	1 kHz		<10 dB SPL
1 (Trace A)	A		<13 dB SPL
1 (Trace A)	L		<15 dB SPL
2 (Trace B)	1 kHz		<10 dB SPL
2 (Trace B)	A		<13 dB SPL
2 (Trace B)	L		<15 dB SPL

Narowband FFT residual responses and noise floor

Channel	Frequency	Measured	at Frequency	Test Limit
1 (Trace A)	200 Hz to 20 kHz			<0 dB SPL
2 (Trace B)	200 Hz to 20 kHz			<0 dB SPL
1 (Trace A)	1 Hz			<-100 dBV/sqrt(Hz)
2 (Trace B)	1 Hz			<-100 dBV/sqrt(Hz)

#4 Amplitude Accuracy Test

Amplitude Accuracy

Ac Calibrator	Channel	Measured	Test Limit
10 mV	1 (Trace A)		79.7 to 80.3 dB SPL
10 mV	2 (Trace B)		79.7 to 80.3 dB SPL
1.0 V	1 (Trace A)	[1]	119.7 to 120.3 dB SPL
1.0 V	2 (Trace B)	[2]	119.7 to 120.3 dB SPL

Flatness

Channel	Frequency	Marker Reading	Mkr minus [1] or [2]	Test Limit
1	10 kHz			-0.3 to 0.3 dB
2	10 kHz			-0.3 to 0.3 dB
1	16kHz			-0.3 to 0.3 dB
1	20kHz			-0.3 to 0.3 dB

A- and C-weight filters

Filter	Frequency	Measured	Test Limit
C	20 Hz		112.3 to 115.3 dB SPL
C	100 Hz		119.2 to 120.2 dB SPL
C	4 kHz		118.7 to 119.7 dB SPL
C	20 Hz		103.8 to 110.3 dB SPL
A	20 Hz		68.0 to 71.0 dB SPL
A	100 Hz		100.4 to 101.4 dB SPL
A	4 kHz		120.5 to 121.5 dB SPL
A	20 Hz		105.7 to 112.2 dB SPL

Narowband FFT Accuracy

Frequency	Channel	Measured	Test Limit
1.6 kHz	1 (Trace A)		119.4 to 120.6 dB SPL
1.6 kHz	2 (Trace B)		119.4 to 120.6 dB SPL
160 Hz	1 (Trace A)		119.4 to 120.6 dB SPL
160 Hz	2 (Trace B)		119.4 to 120.6 dB SPL
19.6 kHz	1 (Trace A)		119.0 to 121.0 dB SPL
19.6 kHz	2 (Trace B)		119.0 to 121.0 dB SPL

#5 Amplitude Linearity Test

Step 4 calculations

Channel	Marker Value	Marker minus 120
1 (Trace A)		[1]
2 (Trace B)		[2]

Amplitude Linearity

Ac Calibrator	Chan	Marker value	Marker minus [1] or [2]	Test Limit
31.62 mV	1			89.8 to 90.2 dB SPL
31.62 mV	2			89.8 to 90.2 dB SPL
10.0 mV	1			79.3 to 80.7 dB SPL*
10.0 mV	2			79.3 to 80.7 dB SPL*
3.162 mV	1			69.3 to 70.7 dB SPL*
3.162 mV	2			69.3 to 70.7 dB SPL*
1.778 mV	1			59.0 to 71.0 dB SPL
1.778 mV	2			59.0 to 71.0 dB SPL

* See backdating

#6 Anti-Alias Filter Test

Channel	Measured	Test Limit
1 (Trace A)		<50 dB SPL
2 (Trace B)		<50 dB SPL

#7 Harmonic Distortion Test

Real-time Octave Distortion

Channel	Frequency	Measured	at Frequency	Test Limit
1 (Trace A)	25 Hz to 630 Hz			<18 dB SPL
2 (Trace B)	25 Hz to 630 Hz			<18 dB SPL
1 (Trace A)	10 kHz		10 kHz	<18 dB SPL
2 (Trace B)	10 kHz		10 kHz	<18 dB SPL

Narowband FFT Harmonic Distortion

Oscillator Frequency	Harmonic Number	Chan	Measured	Test Limit
9.6 kHz	2nd	1		<5 dB SPL
9.6 kHz	2nd	2		<5 dB SPL
6.4 kHz	3rd	1		<5 dB SPL
6.4 kHz	3rd	2		<5 dB SPL

#8 Noise Source Test

Item	Measured	at Frequency	Test Limit
Amplitude at 1 kHz		1 kHz	90 to 100 dB SPL
Minimum Amplitude	[1]		
Maximum Amplitude	[2]		
[2] minus [1]		NA	<2.0 dB

#9 Amplitude and Phase Match

Narrowband FFT Amplitude and Phase Match

Trace	Frequency	Measured	Test Limit
A (amplitude)	10 kHz		-0.1 to 0.1 dB
A (amplitude)	16 kHz		0.2 to 0.2 dB
B (phase)	10 kHz		-1.0 to 1.0 deg
B (phase)	16 kHz		-2.5 to 2.5 deg
A (amplitude)	1.0 kHz		-0.1 to 0.1 dB
A (amplitude)	1.6 kHz		0.2 to 0.2 dB
B (phase)	1.0 kHz		-1.0 to 1.0 deg
B (phase)	1.6 kHz		-2.5 to 2.5 deg

#10 Frequency Accuracy Test

Marker Frequency	Test limit
	9998.0 to 10002.0 Hz

#11 Transducer Power Supply Test

Supply	Channel	Measured	Test Limit
ICP	1		0.15 to 0.25 Volts
ICP	2		0.15 to 0.25 Volts
+28 V	1		25 to 32 Volts
+28 V	2		25 to 32 Volts
+200 V	1		94 to 106 Volts
+200 V	2		94 to 106 Volts

#12 Pressure-Residual Intensity Index

Frequency Band	Marker Value	Test Limits
100 Hz		>22 dB
125 Hz		>23 dB
160 Hz		>24 dB
200 Hz		>25 dB
250 Hz		>25 dB
315 Hz		>25 dB
400 Hz		>25 dB
500 Hz		>25 dB
630 Hz		>25 dB
800 Hz		>25 dB
1 kHz		>25 dB
1.25 kHz		>25 dB
1.6kHz		>25 dB
2 kHz		>25 dB
2.5 kHz		>25 dB
3.15 kHz		>25 dB
4 kHz		>25 dB
5 kHz		>25 dB
6.3 kHz		>25 dB
8 kHz		>23 dB
10 kHz		>20 dB

Service

General Service Information

Introduction

This Service section contains all the information required by service personnel to adjust and service the HP 3569A Real-Time Frequency Analyzer. It also gives circuit descriptions and shows how to assemble and disassemble the analyzer.

How to Use this section

The service section is divided into six chapters. Each section and topic is listed below.

Table 4-1

Chapter	Topic	Includes
4	General Information	Instrument Identification Accessories Supplied Safety Considerations Equipment Required
5	Adjustments	Adjusts to specifications in Installation section, chapter 2.
6	Replaceable Parts	Lists all parts in HP 3569A to assembly level
7	Backdating	Adapts the manual to older units.
8	Circuit Descriptions	Explains theory of operation
9	Service	Assembly troubleshooting data

Instrument Identification

The HP 3569A Real-Time Frequency Analyzer has its serial number on the bottom cover. Hewlett-Packard uses a two-section serial number consisting of a four digit prefix and a five digit suffix separated by a letter designating the country in which the instrument was manufactured (A = U.S.A.; G = West Germany; J = Japan; U = United Kingdom). The prefix is the same for all identical instruments and changes only when a major instrument change is made. The suffix, however, is assigned sequentially and is unique to each instrument.

This manual applies to instruments which serial numbers indicated on the title page. If changes have been made since this manual was printed, a yellow "Manual Change" supplement will define the changes and explain to adapt the manual to the newer instruments. In addition, backdating information adapts the manual for instruments with serial numbers lower than those listed on the title page.

Accessories Supplied

Depending on the country of destination, one of the following ac adapters is supplied with the HP 3569A Real-Time Frequency Analyzer.

Table 4-2

ac Adapters	
United States	HP 82241-60001
Europe	HP 82241-60002
United Kingdom	HP 82241-60003
Japan	HP 82241-60006
Australia	HP 82241-60004
South Africa	HP 82241-60005

Safety Considerations

Although the HP 3569A Real-time Frequency Analyzer is designed in accordance with international safety standards, this manual contains information, cautions, and warnings that must be followed to ensure safe operation and to keep the unit in safe condition. Service and adjustments must be performed by trained service personnel who are aware of the hazards involved (such as fire and electrical shock).

Warning

When you are operating the HP 3569A Real-Time Frequency Analyzer, do not remove the bottom or top enclosures or in any other way access the interior of the analyzer. The battery cover is the only part of the instrument that you may routinely need to remove to replace the battery pack. There are no operator controls inside the analyzer.

Equipment Required

Table 1-2 in the Installation section lists the recommended equipment needed to adjust and troubleshoot the HP 3569A Real-Time Frequency Analyzer. You may substitute other equipment for the recommended model if it meets or exceeds the listed critical specifications. If you make substitutions, you may have to modify the procedures to accommodate the different operating characteristics.

Adjustments

Introduction

This section contains the adjustment procedures for the HP 3569A Real Time Frequency Analyzer. Use these adjustments to return your unit to specified operating accuracy after a repair or for periodic maintenance.

NOTE Before you make adjustments, fully charge the battery and allow 15 minutes for the analyzer to warm up.

Safety Considerations

Although the HP 3569A Real Time Frequency Analyzer is designed in accordance with international safety standards, this manual contains information, cautions, and warnings that must be followed to ensure safe operation and to keep the unit in safe condition. Service and adjustments must be performed by trained service personnel who are aware of the hazards involved (such as fire and electrical shock).

WARNING **The adjustment procedures that follow should only be performed by trained personnel at a static-free station.**

Equipment required

See Chapter 1 in this manual for tables listing recommended test equipment. Any equipment which meets or exceeds the critical specifications given in the table may be substituted for the recommended model.

Make sure that the analyzer's battery is fully charged.

Adjustment Locations

As an adjustment aid, adjustment locators appear at the beginning of each adjustment procedure. These locators are simplified illustrations of the assembly showing the locations of the test points and adjustable components.

Adjustment Summary

Table 5-1 lists all the adjustments which can be performed in the HP 3569A. It is recommended that they be performed in the order in which they are listed in this section since certain adjustment setups assume that the previous adjustment has just been performed. Deviation from this order is not recommended. If any of the adjustments results are unattainable, replace the assembly.

Before you begin any of the adjustments, you must remove the battery and bottom cover. For information on battery and bottom cover removal, see the Disassembly/Assembly portion of the Replaceable Parts section in this manual.

Table 5-1. Adjustments

Adjustment Procedure	Assembly	Component	Test Point
#1. Input and ADC Offset	A3	R107 R207 R151 R251 R175 R275	TP-101 TP-201 TP-102 TP-202 TP-103 TP-203
#2. 20 kHz Flatness	A3	R166 R272 R266	LCD Display LCD Display LCD Display
#3. ADC Gain	A3	R179 R279	LCD Display LCD Display
#4. Phase Match	A3	R206 R272	LCD Display LCD Display
#5. Real Time Clock Timebase	A2	C18	TP-2

#1. Input and ADC Offset

This procedure adjusts the DC offsets of each of the two input channels.

Equipment Required:

DC Voltmeter
50 ohm Feedthroughs (2 ea)

Adjustments and Locations

	Assembly	Adjustment Location	Test Point Location
Channel 1	A3 A3 A3	R106 R151 R175	TP101 TP-102 TP-103
Channel 2	A3 A3 A3	R207 R251 R275	TP-201 TP-202 TP-203

Procedure

1. Connect 50 ohm feedthroughs to both the Channel 1 and Channel 2 BNC Input connectors on the HP 3569A analyzer.

2. Press the following analyzer keys:

   [Inst Mode]
   Set [MODE SELECT] to [Real Time Octave]
   Move the cursor to [Do Preset] and press [Enter]
   [Input/Source]
   Set [SPL RNG 1] to [50 dB]
   Set [SPL RNG 2] to [50 dB]
   Set INPUT 1 [Couple:] to [BNC DC]
   Set INPUT 2 [Couple:] to [BNC DC]
   [Freq]
   Set [START] to [(8) 6.3]
   [Start]

3. Set the voltmeter to read volts DC, with at least a 100uV resolution.
4. Connect the voltmeter low input to the analog ground at A3 TP-1.
5. Connect the voltmeter high input to A3 TP-101 and adjust R107 for a reading of zero volts, +/- 500uV.
6. Move the voltmeter high input from A3 TP-101 to A3 TP-201 and adjust R207 for a reading of zero volts, +/- 500uV.
7. Move the voltmeter high input from A3 TP-201 to A3 TP-102 and adjust R151 for a reading of zero volts, +/- 30mV.
8. Move the voltmeter high input from A3 TP-102 to A3 TP-202 and adjust R251 for a reading of zero volts, +/- 30mV.
9. Move the voltmeter high input from A3 TP-202 to A3 TP-103 and adjust R175 for a reading of zero volts, +/- 30mV.
10. Move the voltmeter high input from A3 TP-103 to A3 TP-203 and adjust R275 for a reading of zero volts, +/- 30mV.
11. Remove the voltmeter test leads from the A3 test points.

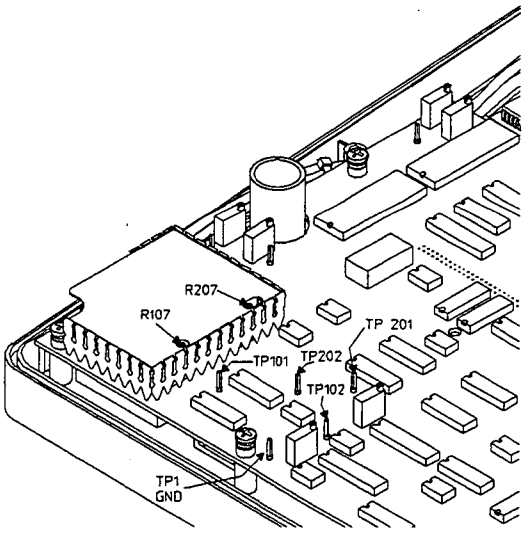

Figure 5-1.
First Stage Input Offset Adjustment Locator

#2. 20 kHz Flatness

This adjustment sets the flatness of the anti-alias filter for each channel.

Equipment Required: AC Calibrator

Adjustments and Locations

Assembly	Adjustment	Test Point
A3	R166 R272 R266	LCD Display LCD Display LCD Display

Procedure.

NOTE This adjustment requires a special setup mode of your HP 3569A.

---

1. Follow this procedure to enter the "Adjust Flatness" mode on the analyzer. If the analyzer is on, turn it off by pressing [Shift] [Off]. Then, hold down the [7] key while pressing [On]. Keep holding down the [7] key for 5 seconds after releasing [On]. Wait a few seconds until a "Press ENTER to continue" message appears, then press [Enter]. Press [1] to select "Adjust Flatness."

2. Connect the AC Calibrator to the Channel 1 and Channel 2 BNC inputs.

3. Set the AC calibrator to output 1 Vrms at 1.024 kHz.

4. Press

   [Shift] [Mkr Peak]
   Make sure the upper trace marker moves to 1.024 kHz and record the reading. It should be 0 dB +/- 2 dB.

5. Change the AC calibrator frequency to 20.48 kHz.

6. Press

   [Shift] [Mkr Peak]
   Make sure the marker moves to 20.48 kHz. Adjust A3 R166 until the marker reading matches the value recorded in step 4. Repeat steps 3 through 6 until the readings are within 0.05dB. This completes the flatness adjustment of channel 1 (the upper trace).

7. Change the AC calibrator frequency to 3.58 kHz.

   Steps 7 through 10 are a preliminary adjustment of R272, which will be re-adjusted later. If the A3 assembly has been adjusted once before, skip to step 11.

8. Press

   [Enter] to make the lower trace active.
   [Shift] [Mkr Peak]
   Make sure the lower trace marker moves to 3.58 kHz and record the reading. It should be 0 dBV +/- 2 dB.

9. Change the AC calibrator frequency to 12.8 kHz.

10. Press

    [Shift] [Mkr Peak]
    Make sure the marker moves to 12.8 kHz. Adjust A3 R272 until the marker reading matches the value recorded in step 8.

11. Change the AC calibrator frequency to 1.024 kHz.

12. Press

    [Enter] to make the lower trace active (if necessary)
    [Shift] [Mkr Peak]
    Make sure the marker moves to 1.024 kHz, and record the reading.

13. Change the AC calibrator frequency to 20.48 kHz.

14. Press

    [Shift] [Mkr Peak]
    Make sure the marker moves to 20.48 kHz. Adjust A3 R266 until the marker reading matches the value recorded in step 12. Repeat steps 11 through 14 until the readings are within 0.05dB.

15. Press

    [Shift] [Off]
    [On]
    To turn the analyzer off and then on.

#3. ADC Gain

This procedure properly adjusts the gains of the input channel's ADC circuits.

Equipment Required: AC Calibrator

Adjustments and Locations

	Assembly	Adjustment	Test Point
Channel 1	A3	R179	LCD Display
Channel 2	A3	R279	LCD Display

Procedure

1. Connect the AC Calibrator output to both HP 3569A Input Channels 1 and 2.

2. Press the following analyzer keys:

   [Inst Mode]
   Set [MODE SELECT] to [Real Time Octave]
   Move the cursor to [Do Preset] and press [Enter]
   [Input/Source]
   Set [SPL RNG 1] to [130 dB]
   Set [SPL RNG 2] to [130 dB]
   Set INPUT 1 [Couple:] to [BNC DC]
   Set INPUT 2 [Couple:] to [BNC DC]
   [Format]
   Set [FORMAT] to [A Above B]
   [Start]

3. Set the AC Calibrator as follows:

   Amplitude: 1Vrms
   Frequency: 1 kHz

4. Press the following keys on the 3569A:

   [Shift]
   [Mkr Peak]
   Make sure that the marker moves to the 1 kHz band.

5. Adjust R179 to a Channel 1 marker reading of 120 dB SPL +/- 20 mdB.

6. Select the peak signal of Channel 2 by pressing:

   [Enter]
   [Shift]
   [Mkr Peak]
   Make sure that the marker moves to the 1 kHz band.

7. Adjust R279 to a Channel 2 marker reading of 120 dB SPL +/- 20 mdB.

#5. Phase Match

This adjustment sets the phase match between channels, which affects the sound intensity reading. Complete this adjustment only if Real-Time Intensity measurements are installed in the analyzer.

Equipment Required: Frequency Synthesizer
50 ohm Feedthrough (1 ea.)

Adjustments and Locations

	Assembly	Adjustment	Test Point
Channel 2	A3	R206	LCD Display
Channel 2	A3	R272	LCD Display

Procedure.

1. Connect the frequency synthesizer to the Channel 1 and Channel 2 BNC inputs using one 50 ohm feedthroughs.

2. Press

   [Inst Mode]
   Set [MODE SELECT] to [Realtime Intensity]
   Move the cursor to [Do Preset] and press [Enter]
   [Input/Source]
   Set [SPL RANGE] to [130 dB]
   Set INPUT [Couple:] to [BNC AC]
   [Avg]
   Set AVG TIME [Time (on:] to [2] [Enter]
   [Start]

3. Set the frequency synthesizer to output 1 Vrms at 2 KHz.

4. Move the marker to the 2 kHz band and adjust A3 R272 to minimize the absolute value of the reading in this band. Press [Start] and allow 10 seconds for the measurement to stabilize after the adjustment. The final reading should be between -88 dB and +88 dB. Negative values are indicated by a solid band.

5. Change the synthesizer's frequency to 6.3 kHz.

6. Move the Trace B marker to the 6.3 kHz band. If the marker reading is between -94 dB and +94 dB Inten, then this adjustment is complete. If the marker reading is outside this range, then re-adjust A3 R272 to bring the absolute value of the reading below 94.

Low Frequency Phase Match

7. Turn OFF the HP 3569A.
8. Press and hold the [7] key while pressing [ON]. Keep holding the [7] key for 5 seconds after releasing the [ON] key.
9. Press [Enter] when the message appears in the display.
10. Press [2] to select "Adjust LF Phase".
11. Set the synthesizer to output 1 Vrms at 1 Hz.
12. Move the marker to the 1 Hz band and adjust R206 for 0.0 degrees. Allow 3 seconds for the measurement to stabilize after each adjustment. The final reading should be between -100mdeg and +100 mdeg.

6 Real Time Clock Timebase

This procedure adjusts the frequency of the real-time clock's crystal oscillator.

Equipment Required: Frequency Counter

Adjustments and Locations

Assembly	Adjustment	Test Point
A2	C18	TP-2

Procedure.

1. Turn off the HP 3569A by pressing:
   [Shift]
   [Off]
2. Set the frequency counter for a display resolution of at least 0.1 Hz.
3. Connect the high input of the frequency counter to A2 TP-2.
4. Connect the low input of the frequency counter to ground at A2 TP-1.
5. Adjust the counter sensitivity/trigger for a stable reading of about 32768 Hz.
6. Adjust A2 C18 for a counter reading of 32768 Hz +/- 0.1 Hz. C18 can be accessed through holes in the A4 and A3 assemblies.

This concludes the adjustments for your HP 3569A Real- Time Frequency Analyzer.

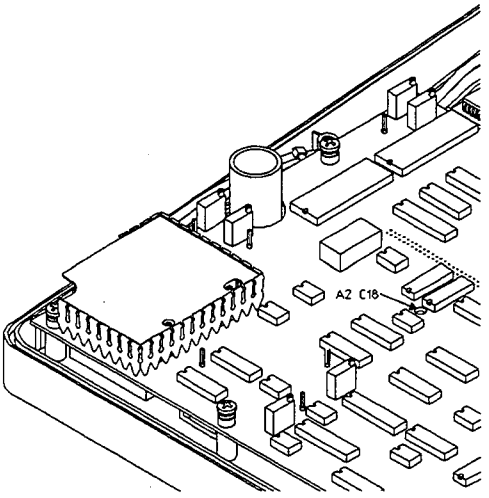

Figure 5-2.
Real-Time Clock Adjustment Locator

Replaceable Parts

Replaceable Parts

Introduction

This section contains information for ordering replacement parts for the HP 3569A Real-Time Frequency Analyzer. This section also contains instructions for disassembly and assembly of the analyzer. These illustrations also show reference desiginator numbers for the hardware.

Replacement parts are listed in the following three tables:

- Assemblies
- Cables
- Hardware

Caution

Many of the parts listed in this section are static sensitive. Use the appropriate precautions when removing, handling, and installing all parts to avoid unnecessary damage.

Ordering Information

Note

See the final pages in the back of this manual for a list of Hewlett-Packard sales and service office locations and addresses.

Ordering Non-Listed Parts

To order a part that is NOT listed in the replaceable parts tables, indicate the instrument model number, instrument serial number, description and function of the part, and the quantity of the part required. Address the order to the nearest Hewlett-Packard sales and service office.

Direct Mail Order System

Within the U.S.A., Hewlett-Packard can supply parts through a direct mail order system. Advantages of the Direct Mail Order System are:

- Direct ordering and shipment from the HP Parts Center.
- No maximum or minimum on any mail order. There is a minimum order for parts ordered through a local HP sales and service office when the orders require billing and invoicing.
- Transportation charges are prepaid. A small handling charge is added to each order.
- No invoicing. A check or money order must accompany each order.
- Mail order forms and specific ordering information are available through your local Hewlett-Packard sales and service office.

Table 6-1. Abbreviations Used

Abbreviations			
A	ampere(s)	ns	nanosecond(s) = 10^{-9} seconds
com	common	p	peak
dep	deposited	pF	picofarad(s) 10^{-12} farads
F	farad(s)	pot	potentiometer
FET	field effect transistor	p-p	peak-to-peak
GHz	gigahertz = 10^{+9} hertz	R	resistor
gnd	ground(ed)	rms	root-mean-square
H	henry(ies)	V	volt(s)
Hz	hertz (cycle(s) per second)	var	variable
ID	inside diameter	W	watts
kΩ	kilohm(s) = 10^{+3} ohms		
kHz	kilohertz = 10^{+3} hertz		
L	inductor		
mA	milliampere(s) = 10^{-3} amperes		
MHz	megahertz = 10^{+6} hertz		
MΩ	megohms(s) = 10^{+6} ohms		
mfr	manufacturer		
ms	microsecond		
mV	millivolt(s) = 10^{-6} volts		
μF	microfarad(s)		
μs	microsecond(s)		
μV	microvolt(s) = 10^{-6} volts		
nA	nanoampere(s) = 10^{-9} amperes		

Table 6-2. Manufacturers' Code Numbers

Mfr No.	Mfr Name	Address
00955	Koszegi Products Inc.	South Bend, IN 46624
01924	ITW Fastex	Des Plaines, IL 60016
02916	Colorado Container	Denver, CO 80216
06363	Oudensha America Inc.	Elk Grove Village, IL 60007
06925	Sherwood Enterprises Inc.	Longmont, CO 80501
13115	Citizen Watch Co.	Tokyo, JP
03418	Molex Incorporated	Lisle, IL 60532
28480	Hewlett-Packard Company	Palo Alto, CA 94304
09655	Chomerics Shielding Technologies	Carson
L2276	Syndetek Corporation	Spokane, WA 99202
L3606	Kasho	San Francisco, CA 94105
L3914	Instrument Plastics Limited	Maidenhead Berkshire, UK

Assemblies

To order an assembly listed in Table 6-3, quote the Hewlett-Packard part number, the check digit (CD), indicate the quantity required, and address the order to the nearest Hewlett-Packard sales and service office. The check digit verifies that an order has been transmitted correctly, ensuring accurate and timely processing of the order. The first time a part is listed in the table, the quantity column lists the total quantity of the part used in the analyzer. See Table 8-2 for a table listing the manufacturers' code numbers and the corresponding names and addresses.

Table 6-3. Assemblies

Ref.Des.	HP Part Number	CD	Qty	Description	Mfr. Code	Mfr. Part Number
A1	03569-69501	3	1	DSP KEYBOARD	28480	03569-69501
A2	03569-69502	4	1	MAIN CPU	28480	03569-69502
A3	03569-69503	5	1	ANALOG	28480	03569-69503
A4	03569-66504	5	1	Noise Source	28980	03569-66504
MP201	1990-1429	9	1	DSPL 6.5" LCD 320X240 W/BKLGT	13115	CG-3202400K-01
MP203	~~1990-1429~~ 1420-0504		1	BATTERY-NICAD	28480	1420-0504

Cables

To order a part listed in Table 6-4, quote the Hewlett-Packard part number, the check digit (CD), indicate the quantity required, and address the order to the nearest Hewlett-Packard sales and service office. The check digit verifies that an order has been transmitted correctly, ensuring accurate and timely processing of the order. The first time a part is listed in the table, the quantity column lists the total quantity of the part used in the analyzer. See Table 6-2 for a table listing the manufacturers' code numbers and the corresponding names and addresses.

Table 6-4. Cables

Ref.Des.	HP Part Number	CD	Qty	Description	Mfr. Code	Mfr. Part Number
MP301	03560-61609		1	CABLE-DISPLAY		
MP302	03560-61602		1	CABLE-BATTERY		
MP305	03560-61605		1	CABLE-BACKLIGHT		
MP401	8160-0710		1	GASKET-RFI		
MP402	1251-8026		1	CONNECTOR 12 PIN		
MP403	8160-0271		2	GASKET-RFI		
W001	03569-61611		1	CABLE-BNC INPUT		
W002	03569-61621		2	CABLE-MIC INPUT		
W003	03569-61622		1	CABLE-I10		
W004	03569-61603		1	CABLE-CHARGER		
W005	03569-61604		1	CABLE-RS232		
W006	03569-61610		1	CABLE-EXT TRIG/SO		

Hardware

To order a part listed in Table 6-5, quote the Hewlett-Packard part number, the check digit (CD), indicate the quantity required, and address the order to the nearest Hewlett-Packard sales and service office. The check digit verifies that an order has been transmitted correctly, ensuring accurate and timely processing of the order. The first time a part is listed in the table, the quantity column lists the total quantity of the part used in the analyzer. See Table 6-2 for a table listing the manufacturers' code numbers and the corresponding names and addresses. For hardware reference desiginator numbers, see the disassembly/assembly illustrations following this table.

Table 6-5. Hardware

Ref.Des.	HP Part Number	CD	Qty	Description	Mfr. Code	Mfr. Part Number
MP308	03569-00600		1	MAGNETIC SHIELD		
MP001	1440-0215		1	HANDLE		
MP002	0515-1410		2	SCR-MCH M3.0 20MMLG		
MP003	0515-1038		6	SCR-MCH M3.0 35MMLG		
MP004	0380-3055		2	SCR-JCK 4-40 .38LG		
MP005	2260-0009		2	NUT-HXK 4-40 .094T		
MP008	2950-0054		4	NUT-HXP.50-28 .125T		
MP010	0515-0430		7	SCR-MCH M3.0 6MMLG		
MP013	03560-26001		2	SCR-M5.0X.8 15.88MM		
MP100	03569-34302		1	NAME PLATE "3569A"		
MP101	03569-40201		1	TOP ENCLOSURE		
MP102	03569-40202		1	BOTTOM ENCLOSURE		
MP103	03560-44101		1	BATTERY COVER		
MP104	03569-29301		1	DISPLAY WINDOW		
MP107	03569-80401		1	LABEL-BOTTOM		
MP109	1990-1455		1	GREEN LED		
MP202	03569-41901		1	KEYPAD "3569A"		
MP203	1420-0504		1	BAT-NICAD, 5 D CELL		
MP204	03560-36705		1	GASKET-DISPLAY		
MP306	03569-80407		1	LABEL REAR PANEL		
MP307	1250-1032		1	CONNECTOR-BNC		
MP501	03560-31001		1	CARRYING CASE		
MP607	0515-0372		6	SCR-MCH M3.0 8MMLG		
MP608	0515-0372		6	SCR-MCH M3.0 8MMLG		
MP611	2950-0134		2	NUT-HXS.25-28 .125T		

Disassembly Instructions

The HP 3569A contains three major assemblies:

- A1 Main Processor Assembly
- A2 Digital Signal Processor (DSP) Assembly
- A3 Input Assembly
- A4 Noise Source Assembly

It also has a Liquid Crystal Display (LCD) and a rechargeable battery pack.

Use the following instructions for assembly removal and replacement of each assembly. See Chapter 8 "Circuit Descriptions" for additional diagrams.

Warning

Turn off the analyzer and make sure the ac adapter is not connected to the connector panel before disassembly or assembly of the HP 3569A Real-Time Frequency Analyzer. Only qualified service personnel should assemble or disassemble the HP 3569A.

Caution

Do not connect or disconnect ribbon cables from circuit assemblies with the analyzer turned on or with the ac adapter connected. To protect circuits from static discharge, remove or replace HP 3569A assemblies only at static-protected work stations.

Do not flex microphone input cable W2; it is very fragile at the point closest to its input connector. Do not pinch any cables between standoffs and the top or bottom enclosures.

Battery Pack Removal

1. Place the instrument on a flat surface with the front panel side down.
2. Remove the two screws from the battery cover plate as shown in figure 6-1.
3. Lift the battery pack out of its compartment and disconnect the battery cable by pinching or pressing down on the connector's locking device.

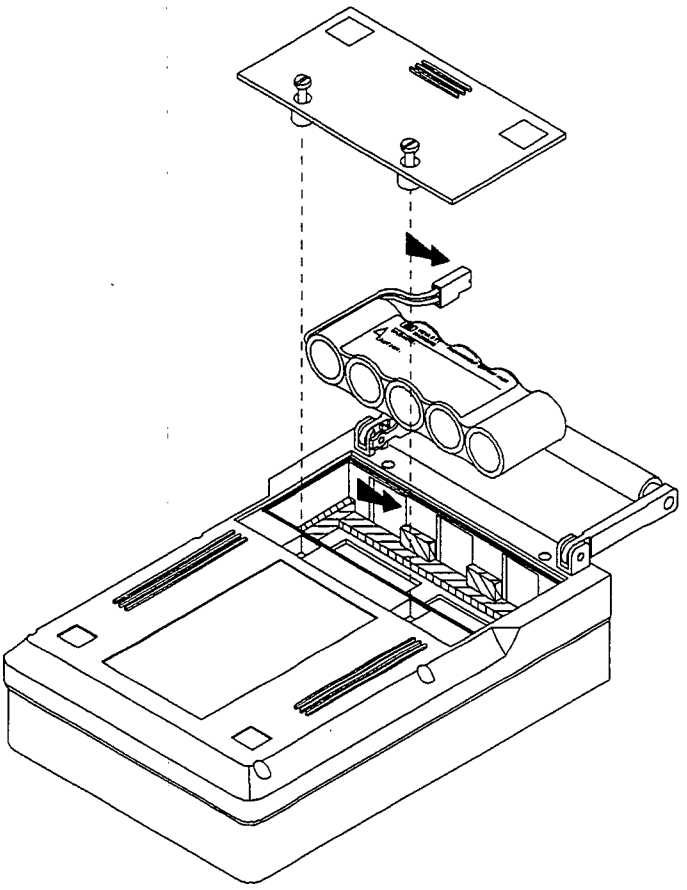

Figure 6-1.
Battery Pack Removal

Bottom Cover Removal

1. Remove the six screws from the perimeter of the bottom cover as shown in figure 6-2.
2. Carefully lift off the bottom cover and feed the battery cable through the opening above the battery pack compartment.

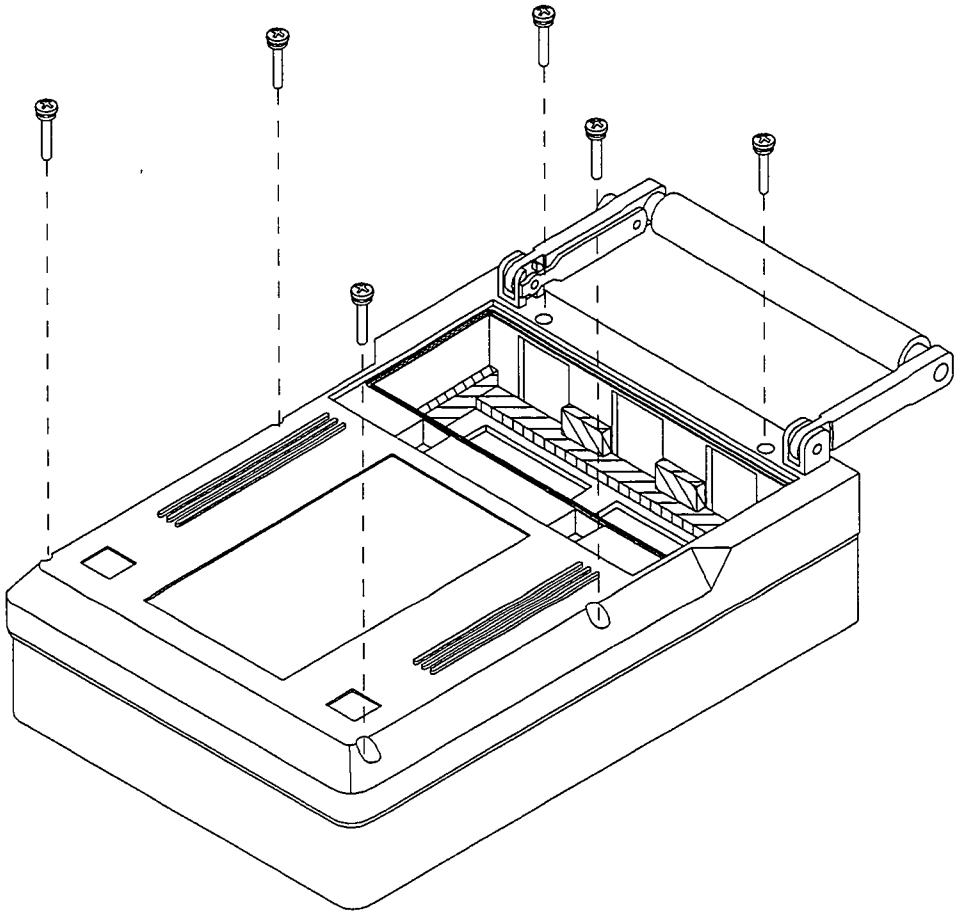

Figure 6-2.
Bottom Cover Removal

A4 Noise Source Assembly Removal

1. Remove the screw holding the A4 assembly as shown in figure 6-3.
2. Unplug the A4 assembly from the A3 assembly.
3. Disconnect cables to the A4 assembly.

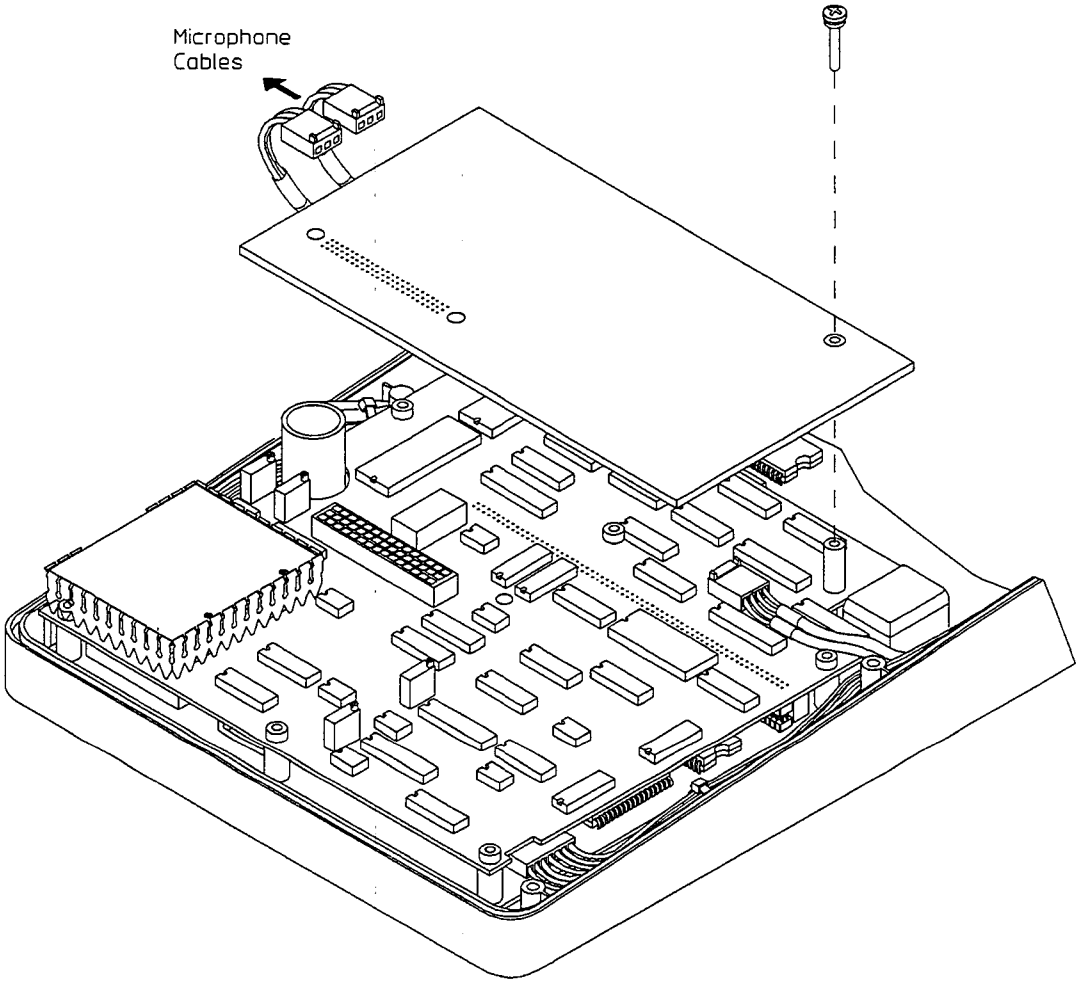

Figure 6-3.
A4 Assembly Removal

A3 Analog Assembly Removal

Caution Be careful when removing and installing the six screws from the A3 assembly. When turning the screws in, turn the screw only 1/4 turn after you feel resistance. If any part of the insert breaks, it can be fixed by using five minute epoxy.

4. Remove the six screws holding the A3 assembly as shown in figure 6-4.
5. Disconnect the P2 Input Cable and the P1 Trigger Cable, and the microphone cables.
6. Pull the A3 assembly away from the lower assemblies. It may help to place your tumb on the large capacitor shown at the left of figure 6-4 as you pull the A3 assembly up. (You will use one of the six A3 assembly screws as a backout screw for removing the A2 assembly.)

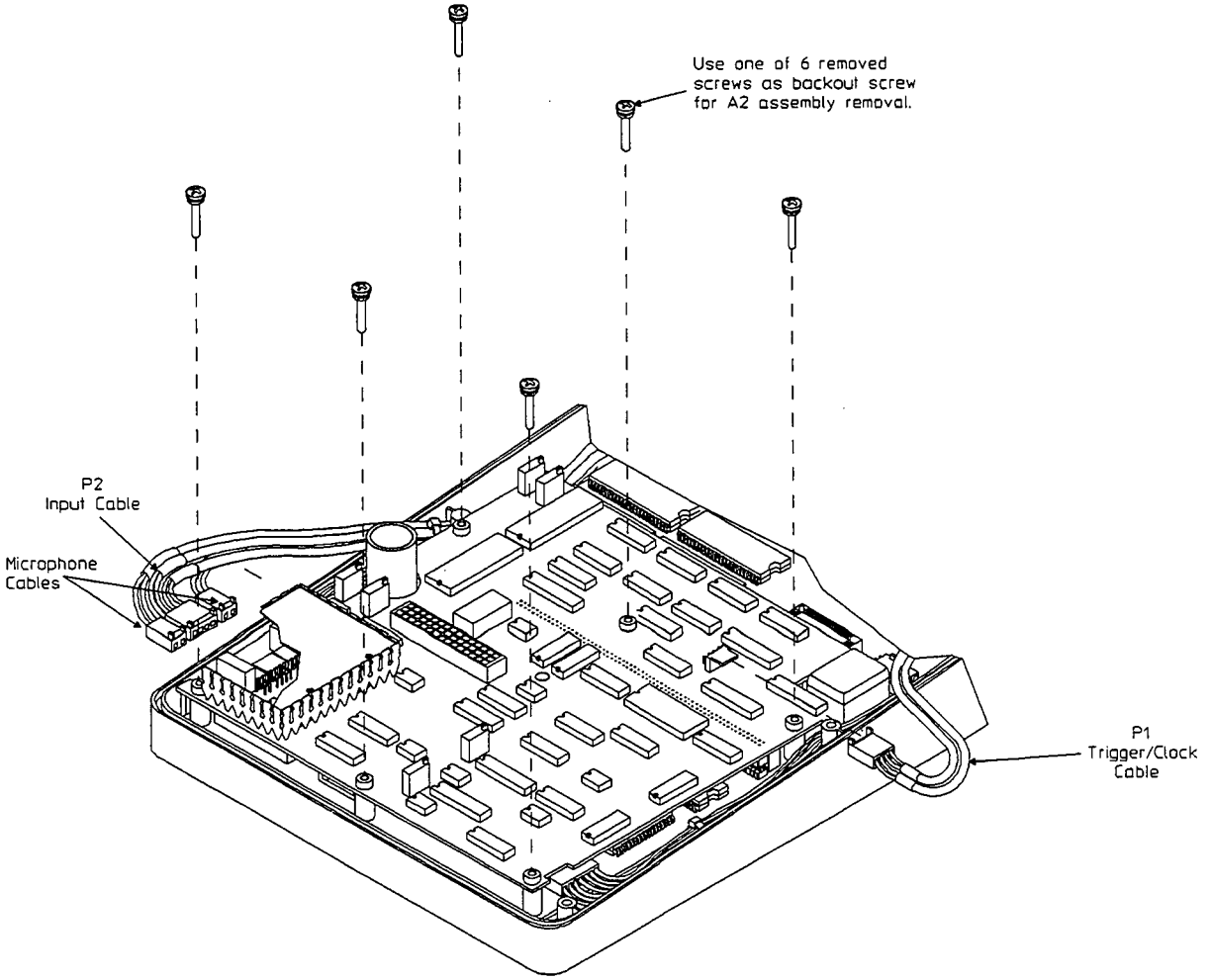

Figure 6-4.
A3 Assembly Removal

A2 Main Assembly Removal

1. Remove the magnetic shield, MP 308
2. Remove the two screws holding the A2 assembly as shown in figure 6-5.
3. Disconnect the Battery Cable at P6, the Charger Cable at P3, the Backlight Cable at P5, the RS-232C Cable at P1, and Digital IO cable at P7.
4. Install one of the screws in the special slot in the board as shown and turn until the A2 assembly is lifted off the main connector (center of the assembly).
5. Remove the A2 assembly.
6. Jumper P8 should be moved to the "OFF" position when the A2 assembly is removed. This will prevent draining the backup battery on this board. Move P8 to the "NORM" position when installing the A2 assembly.
7. ROMS U1, U2, and U41 contain software options and serial number information. When replacing the A2 assembly these ROMS should be moved to the new assembly.

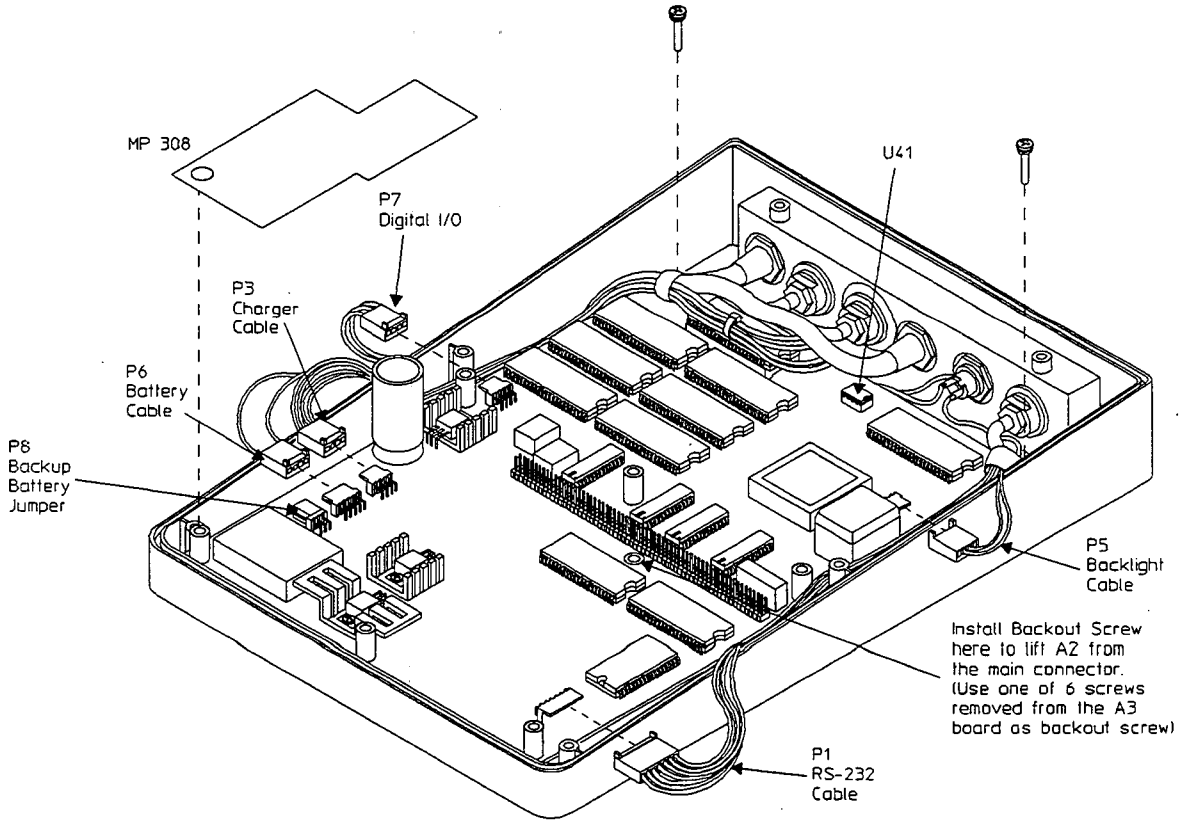

Figure 6-5.
A2 Assembly Removal

A1 DSP Assembly Removal

1. Remove the three screws holding the A1 assembly as shown in figure 6-6.
2. Carefully disconnect the LCD driver cable and push it through the slot so it is under the A1 assembly as shown in figure 6-6. Disconnect the Digital IO cable at P3.
3. Remove the A1 assembly.

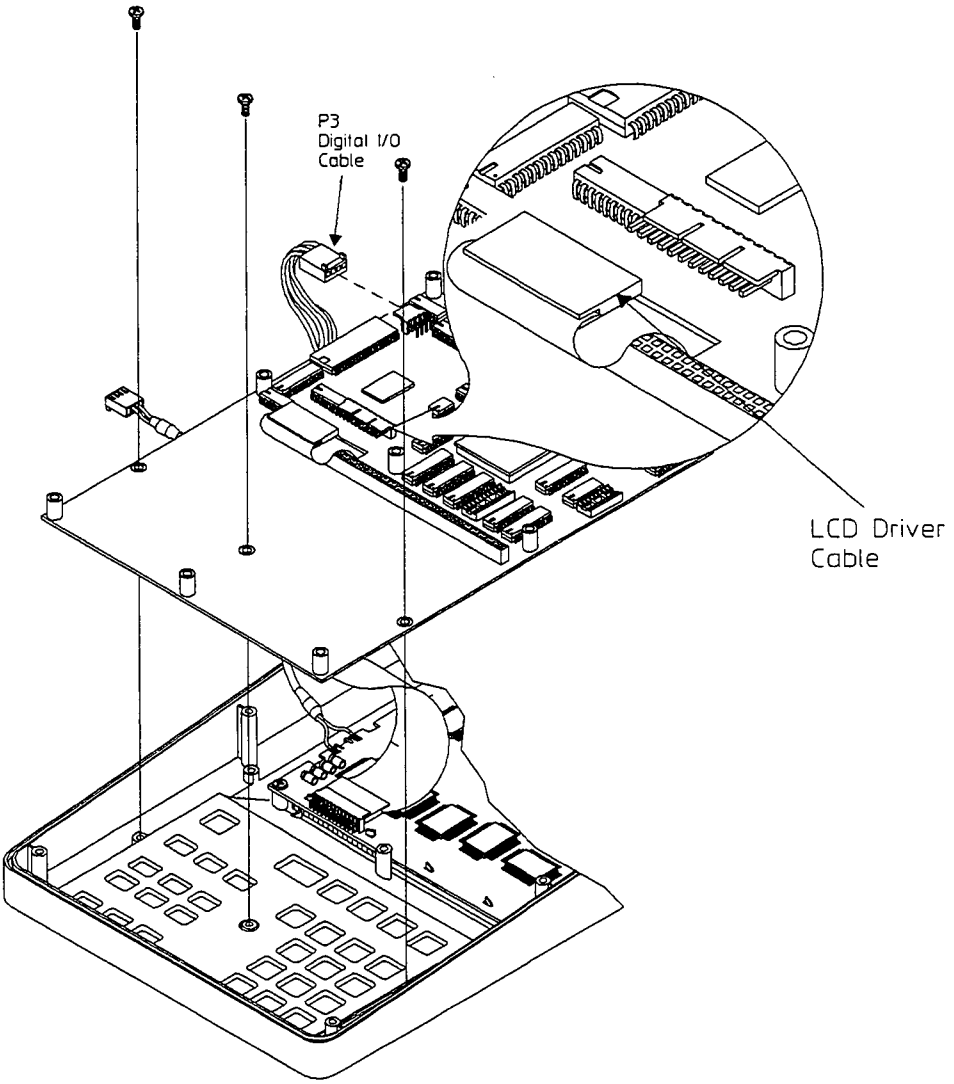

Figure 6-6.
A1 Assembly Removal

LCD Display Removal

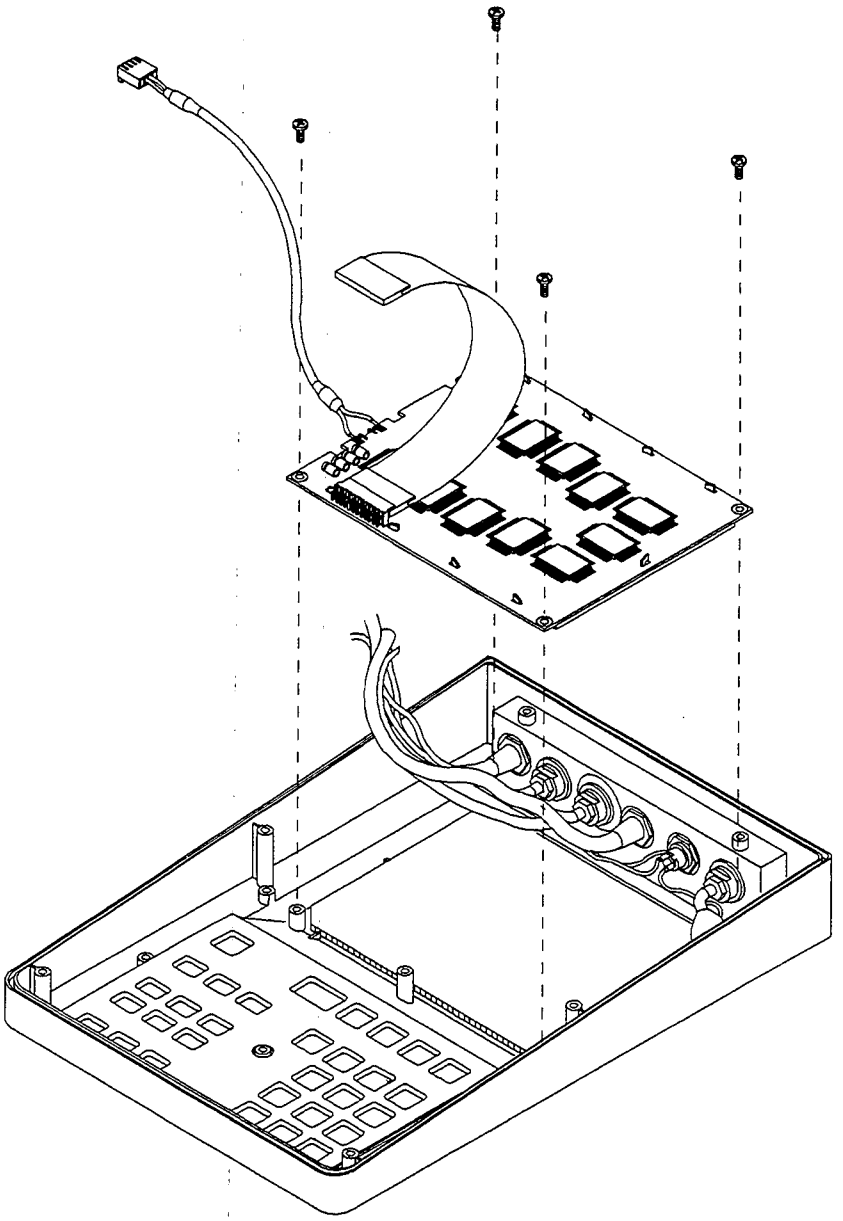

Figure 6-7.
LCD Display Removal

Assembly Instructions

Use the following illustrations to help you re-assemble the instrument.

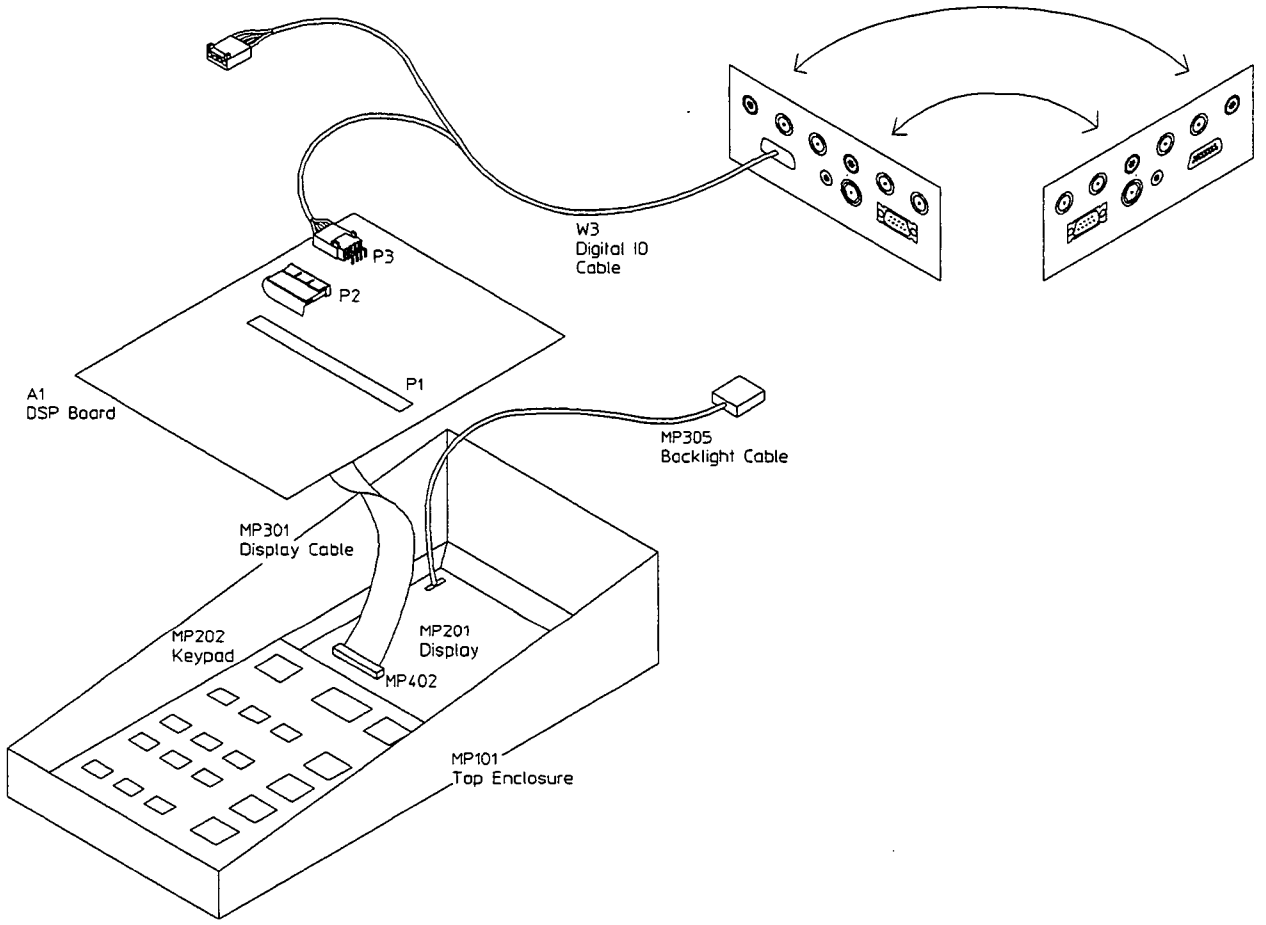

Figure 6-8.
A1 Assembly connections

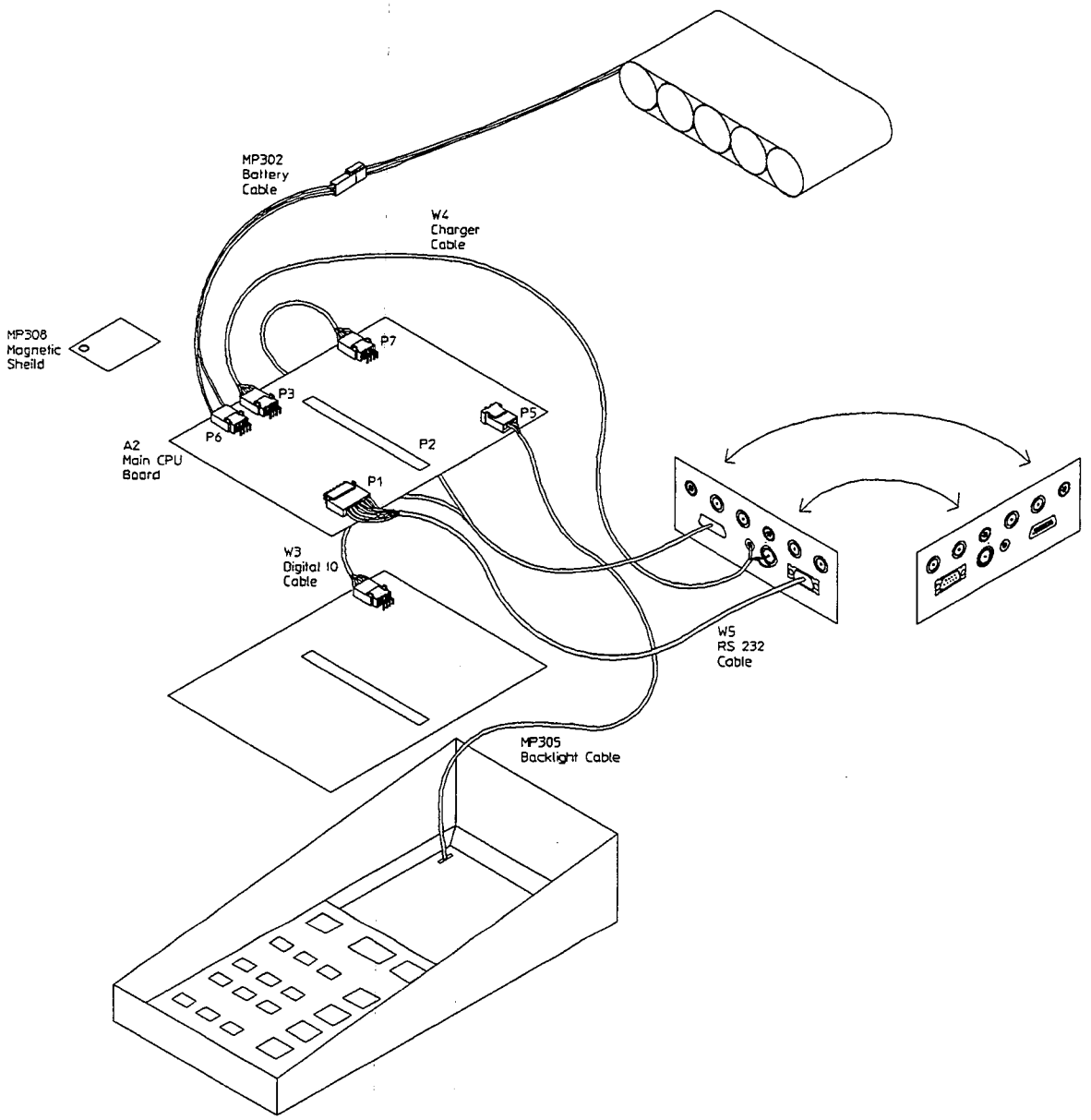

Figure 6-9.
A2 Assembllyconnections

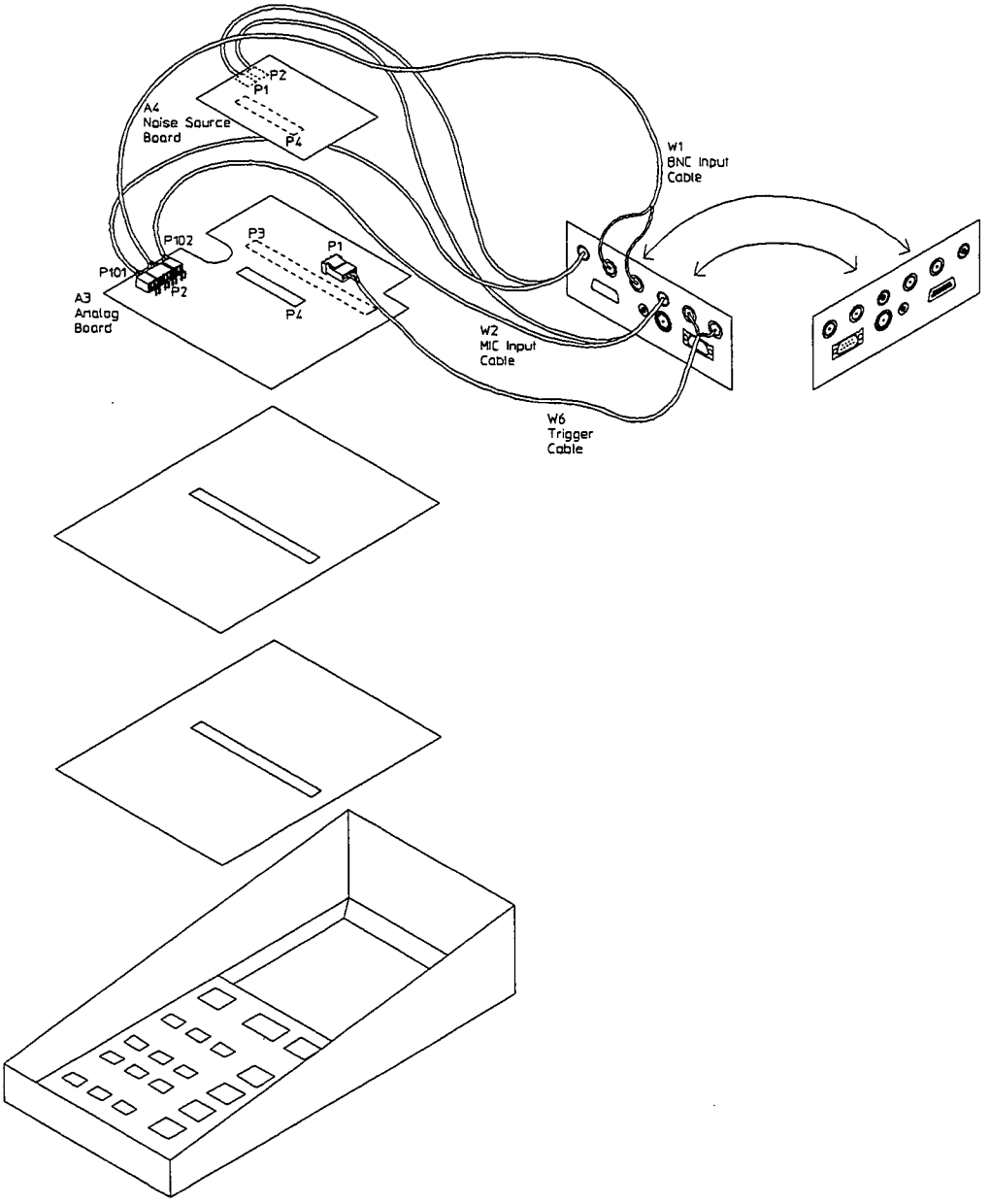

Figure 6-10.
A3 Assembly connections

Manual Backdating

Introduction

This section provides information necessary to modify this manual for instruments that differ from those currently being produced. The information in this section documents earlier instrument configurations and associated servicing procedures.

With the information provided in this section, this manual can be corrected so that it applies to any earlier version or configuration of the instrument. Later versions of the instrument are documented in the Manual Changes Supplement.

Manual Changes Supplement

As Hewlett-Packard continues to improve the performance of the HP 3569A, corrections and modifications to the manual may be required. Required changes are documented by a yellow Manual Changes supplement and/or revised pages. To keep the manual up-to-date, periodically request the most recent supplement, available from the nearest Hewlett-Packard sales and service office (for office locations, see the listing at the back of this manual).

Serial Number 3320A00000 and lower

These instruments do not have circuit changes to improve amplitude linearity. In Chapter 3, replace the specification table in test # 5 Amplitude Linearity on page 3-16 with:

Specification

Octave mode:	
0 to -40 dBfs:	+- 0.2 dB
-40 to -45 dBfs:	+- 0.7 dB
-45 to -50 dBfs:	+- 1.0dB
-50 to -60 dBfs:	+- 2.5dB
-60 to -65 dBfs:	+- 6.0 dB

In step 4 on page 3-18, replace the test limit table with:

Ac Calibrator	Test Limit
31.62 mV	89.8 to 90.2 dB SPL
10.00 mV	79.0to 81.0 dB SPL
3.162 mV	67.5 to 72.5dB SPL
1.778 mV	59.0 to 71.0 dB SPL

Replace the last page 3-39 of the performace test record with:

Amplitude Linearity

Ac Calibrator	Chan	Marker value	Marker minus [1] or [2]	Test Limit
31.62 mV	1			89.8 to 90.2 dB SPL
31.62 mV	2			89.8 to 90.2 dB SPL
10.0 mV	1			79.0 to 81.0 dB SPL
10.0 mV	2			79.0 to 81.0 dB SPL
3.162 mV	1			67.5 to 72.5 dB SPL
3.162 mV	2			67.5 to 72.5 dB SPL
1.778 mV	1			59.0 to 71.0 dB SPL
1.778 mV	2			59.0 to 71.0 dB SPL

Circuit Descriptions

Introduction

This chapter contains the overall instrument description and individual assembly descriptions for the HP 3569A Real-Time Frequency Analyzer. The overall instrument description lists the assemblies in the HP 3569A and describes the instrument's overall block diagram. The assembly descriptions give additional information for each assembly.

Overall Instrument Description

The HP 3569A Real-Time Frequency Analyzer is a powerful two-channel spectrum analyzer equivalent in performance and accuracy to instruments many times its size and weight. Its rugged enclosure lets you carry out sophisticated measurements in the most hostile environments. The menu- driven setup procedures enable you to quickly master all control, measurement and display features.

The high-contrast LCD dot matrix display allows alphanumeric and graphic representation on its 320 × 240 pixel format. The display is protected by a watertight, scratch- resistant window. The elastomeric keys are rugged and provide tactile feedback even when wearing gloves. The enclosure resists moisture and dust and can be cleaned by simply wiping with a damp cloth.

Measurement processing is carried out by a 24-bit digital signal processor allowing rapid manipulation of data and calculation of complex mathematical processes. The non-volatile static RAM retains stored data when the instrument is switched off. All switching of the internal measurement circuitry is performed by menu- prompted entry from the front panel keys. Clearly-annotated prompts make operation of the HP 3569A much easier.

The large memory of the HP 3569A facilitates sophisticated processing algorithms and lets you store several measurements for later inspection or for downloading via the RS-232 interface. You can directly print or plot measurement results or transfer data to a personal computer. The HP 3569A is supplied with the Standard Data Format (SDF) Utilities to make HP 3569A data transportable to other Hewlett Packard Dynamic Signal Analyzers or to other third party software packages for data comparisons and archival.

The HP 3569A is powered from an internal battery pack and operates four hours when fully charged. Recharge the batteries by connecting the ac- adapter provided to the ac- adapter socket. The instrument can be powered with the ac adapter connected when the battery charge is low.

Overall Block Diagram

Figure 8-1 shows the overall block diagram for the analyzer. The HP 3569A ues a purely static CMOS design to minimize power consumption.

Channel 1 and channel 2 inputs are switched via dc, ac, microphone, or accelerometer coupling to an electronically programmable gain amplifier covering 3 decades. The output of the gain amplifer is anti-alias filtered before conversion to an analog-to-digital converter, the output of which is available to the digital saignal processor (DSP).

The trigger source routes either internally from channel 1 or channel 2, externally, or freely runs under the control of the processor. The trigger level resolution is one part in 256, but it is scaled to one point in 200 for easier operator control.

The digital signal processor (DSP) reads data from the A/D converters and performs octave filtering or Fast Fourier Transform (FFT). During zoom analysis, the DSP digitally heterodynes the samples and performs a second anti-aliasing function before computing the FFT. DSP data and programs are stored in the 24-bit × 128 k-word DSP Random Access Memory (RAM).

The Main Processor section uses 16-bit processing and data transferring. A removable rechargeable battery pack provides the power. A lithium battery provides backup of the static memory and real time clock. Batteries are protected against current discharge caused by internal component failure.

High efficiency linear regulators provide primary instrument power. The instrument monitors battery charge at two levels.

- The first causes a warning message "BAT," to be displayed on the screen when about one hour of charge time remain.
- The second shuts down the instrument to prevent an over-discharge condition on the internal batteries.

If the timeout feature is turned on, it automatically turns off the instrument if ten minutes passes without any key presses. This saves the battery charge if you inadvertently leave the instrument on. In addition, the timeout feature will turn off the instrument after only two minutes of no key presses if the instrument was turned on but no other keys were pressed, (for example, the instrument was turned on but not operated). The only exception to this timeout is if the machine is waiting for a trigger or if you turn off the [timeout] feature.

The **Main Processor** controls the analyzer. The following is a partial list of the operations it performs:

- Configures the assemblies.
- Controls the Display assembly.
- Controls the operation of the Digital Signal Processor.
- Initiates the power-up sequence.
- Monitors for a front panel keystroke.
- Monitors the assemblies for overloads or other error conditions.
- Runs the self tests.

The **Memory** contains RAM and ROM for the CPU. The RAM is static and does not require refresh.

The **Display** offers a view of the processed data. It consists of the liquid crystal display (LCD) assembly, a display controller IC, display RAM, and backlight inverter.

The **Keyboard** allows interaction with the analyzer. It consists of an elastomeric keypad and a keyboard controller IC.

The **Power Supply** provides the dc voltages shown in figure 8-4.

The **Noise Source** generates white or pink noise.

The instrument casing is electro-dagged which provides RFI protection. The casing is also water and dust resistant.

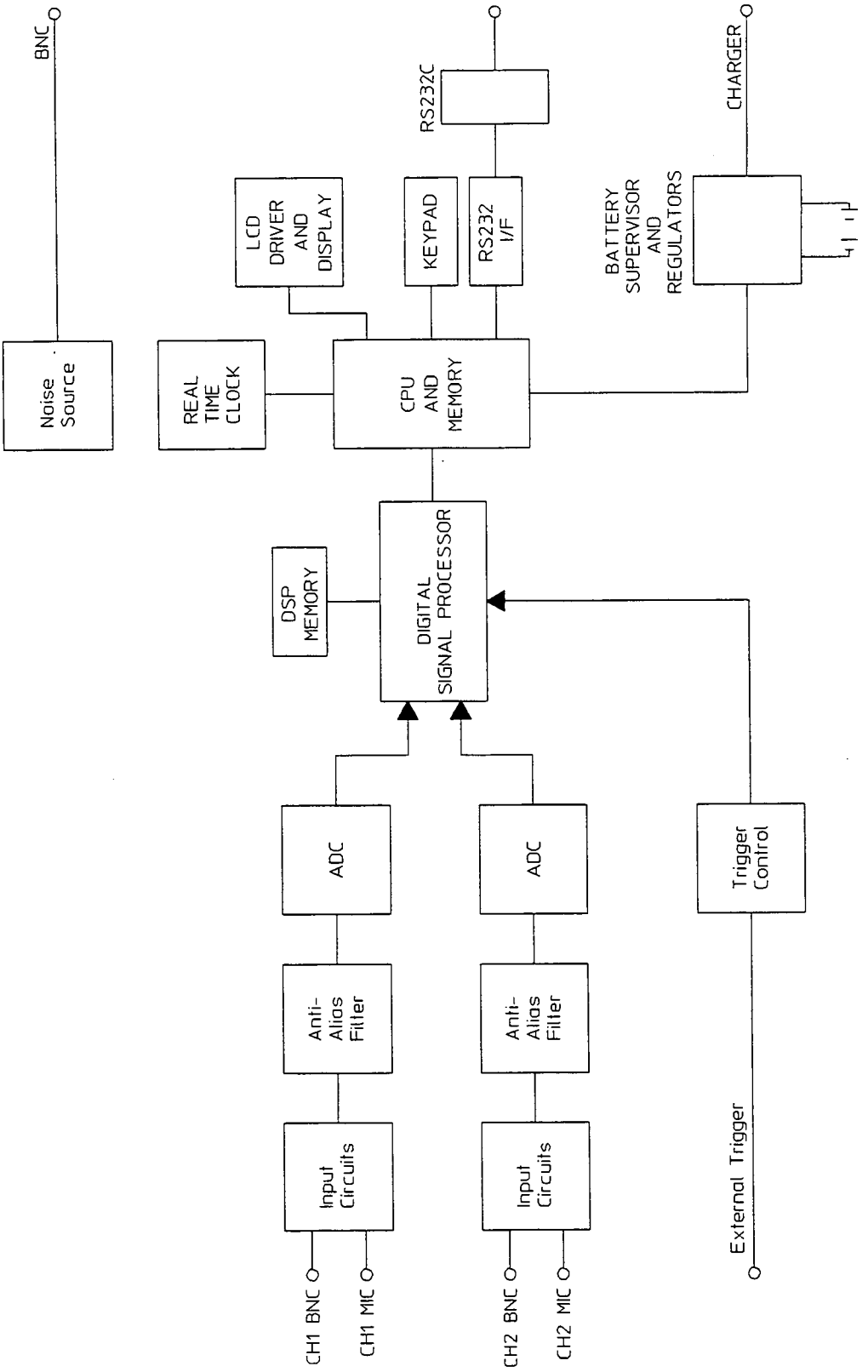

Figure 8-1.
Overall Block Diagram

Assembly Descriptions

The HP 3569A Spectrum Analyzer consists of the assemblies shown below.

- A1 Digital Signal Processing/Keyboard
- A2 Main Processor Board
- A3 Analog Board
- LCD Display
- A4 Noise Source Board
- Battery Pack

A1 Digital Signal Processing/Keyboard

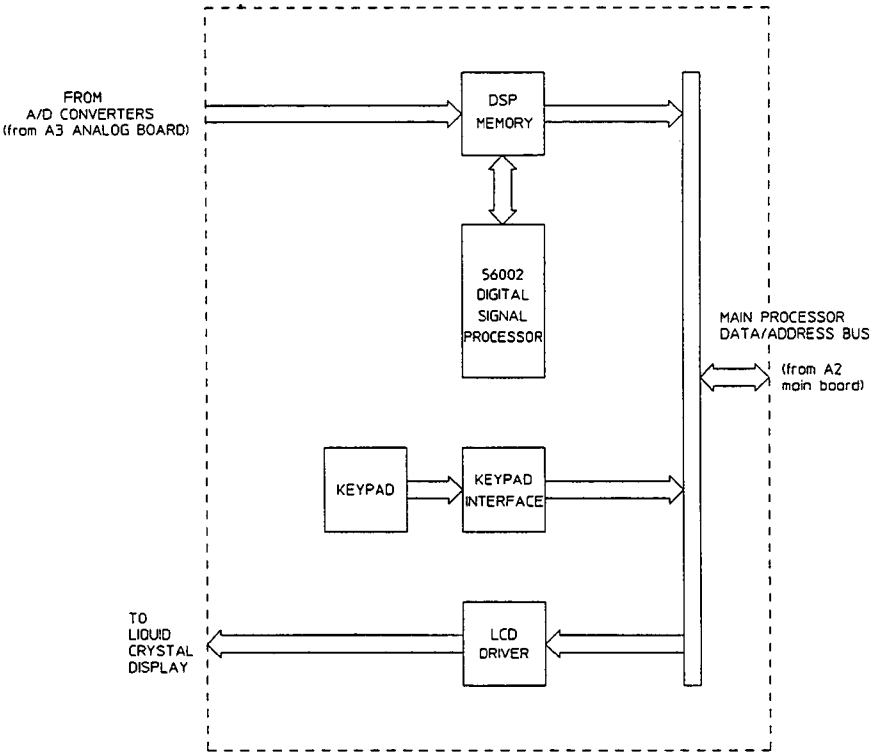

Figure 8-2.
A1 DSP/Keyboard Block Diagram

Note

In this section, the block diagrams show the connector numbers for signals routed through the cables.

The digital signal processor (DSP) reads data from the A/D converters preforms third octave filtering, or computes the Fast Fourier Transform (FFT). During zoom analysis, the DSP digitally heterodynes the samples and performs a second anti-aliasing function before computing the FFT. DSP data and programs are stored in the 24-bit × 128 k-word DSP Random Access Memory (RAM).

A2 Main Processor Board

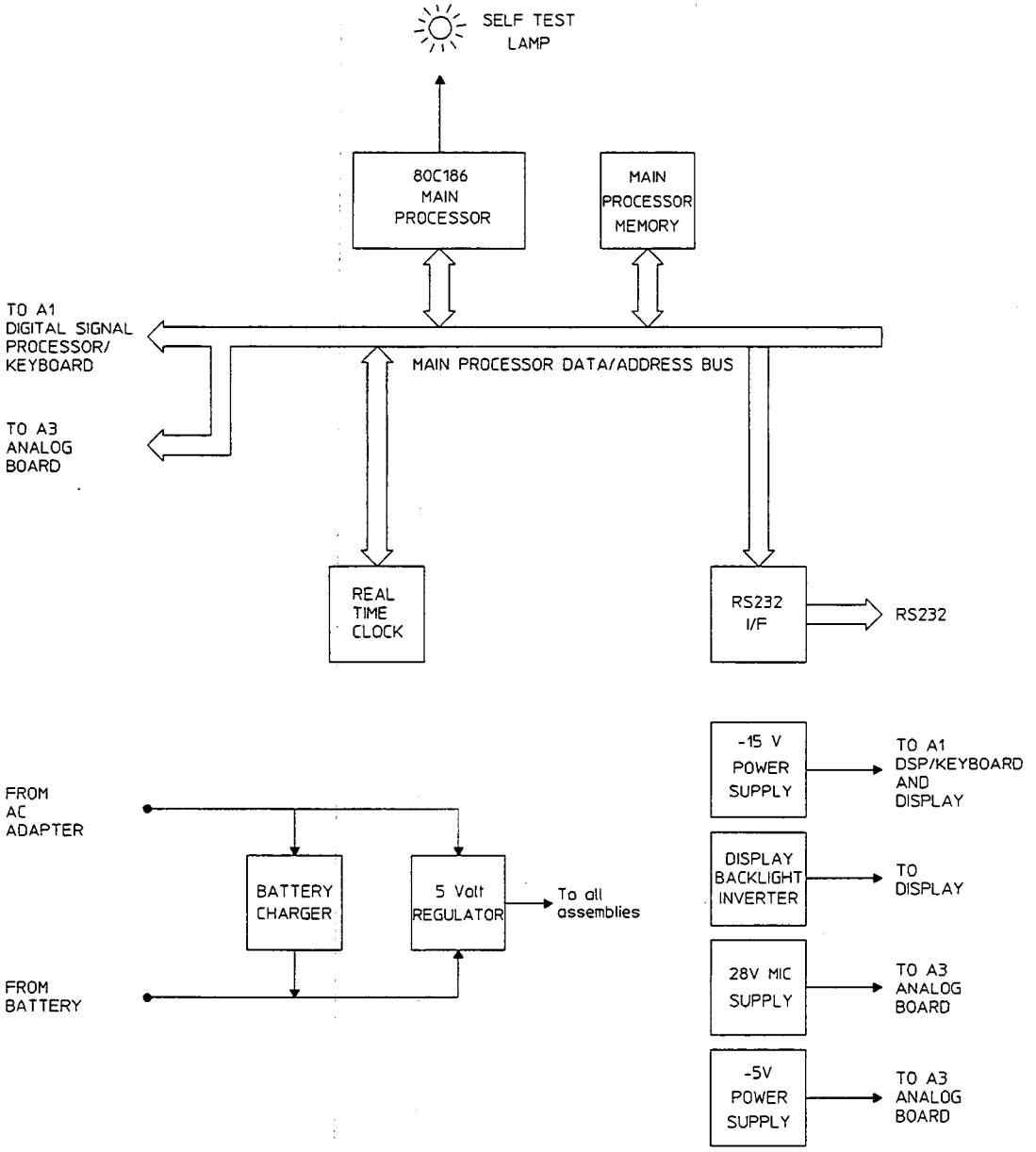

Figure 8-3.
A2 Main Processor Block Diagram

The Main Processor section uses 16-bit processing and data transferring. The assemlby's dc-to-dc converters generate –5, –15, and +28 volts for other assemblies. A second lithium battery provides backup of the static memory and real time clock. Batteries are protected against fault current discharge caused by internal component failure.

A3 Analog Board

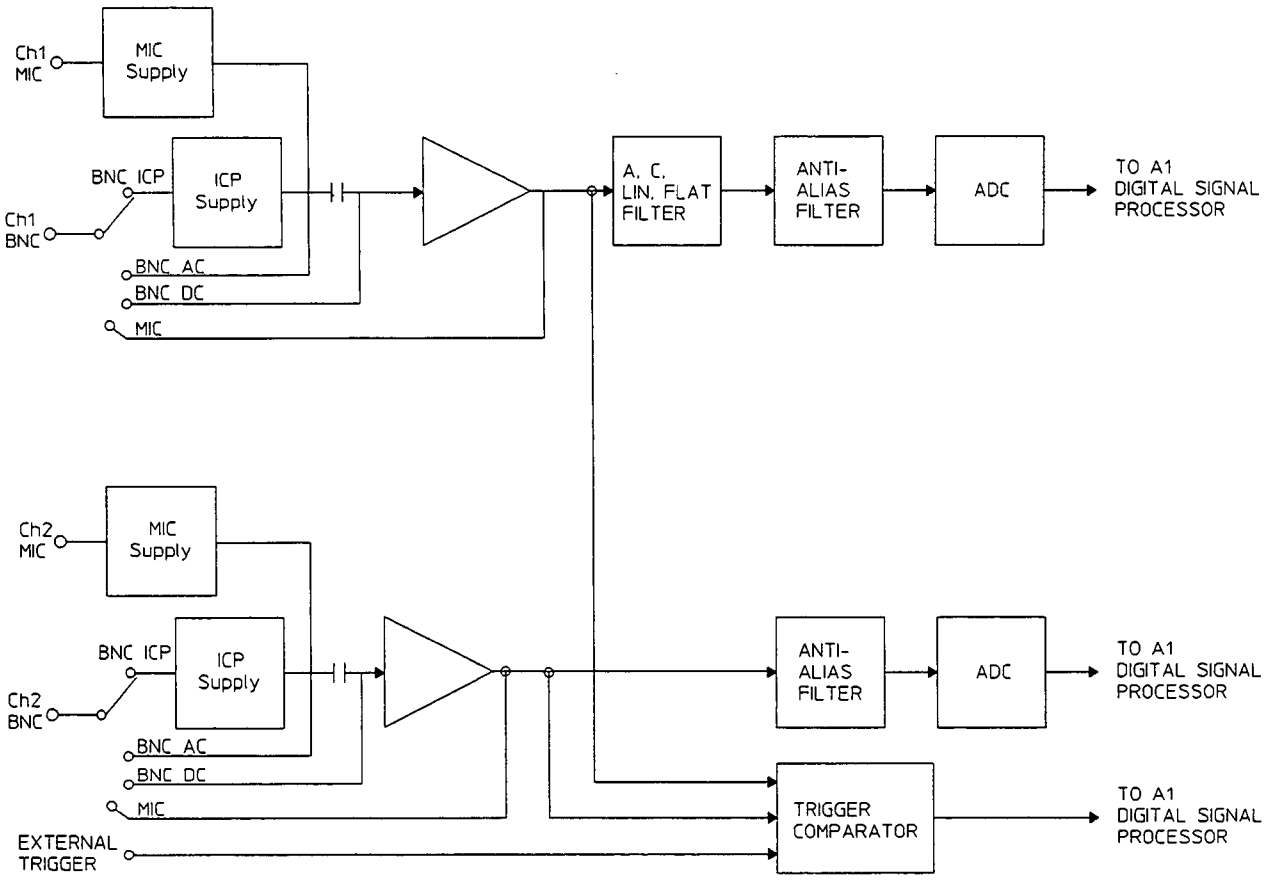

Figure 8-4.
A3 Analog Block Diagram

Channel 1 and channel 2 inputs are switched via mic, BNC ac, BNC dc, or BNC ICP coupling to a programmable gain amplifier. When the mic coupling is selected, the output of this amplifier switched to the BNC connector to allow monitoring or recording. The mic supply voltages are generated by circuits located on the the A4 Noise Source assembly. The ICP supply consists of a 4 ma constant current source.

The output of the channel 1 amplifier is filtered by an analog weighting filter. Either A, C, Lin (10 Hz high pass), or Flat weighting can be selected. Weighting filters may also be digitally applied to either channel by the digital signal processor.

The signals are then anti-alias filtered, sampled, and converted to digital. The output of the A/D converter is sent to the digital signal processor (DSP).

The trigger comparator selects the source of the trigger and compares this signal with an programmable trigger threshold.

A4 Noise Source Board

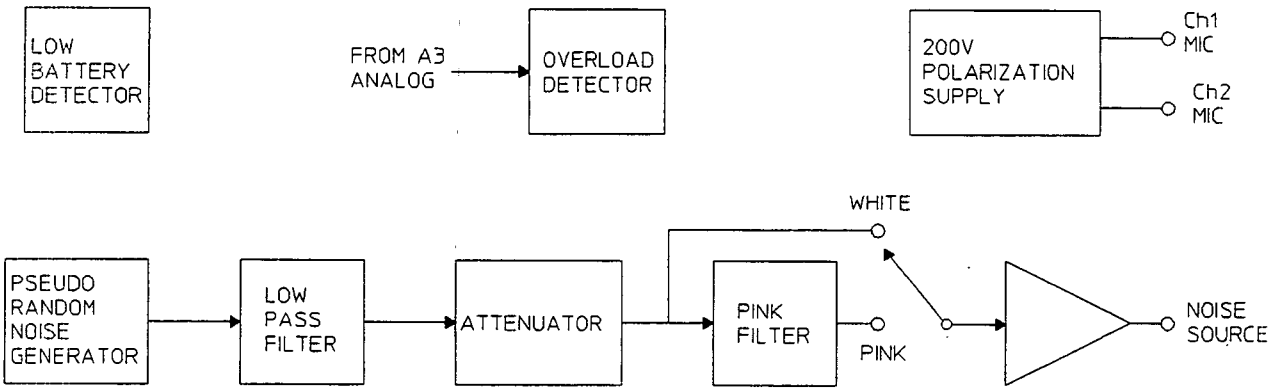

Figure 8-5.
A3 Noise Source Diagram

The Noise Source, overload detect, and 200V polarization supply circuits are located on the A4 assembly. The pseudo-random noise generator outputs digital, binary noise to a 20 kHz low-pass filter. This signal is then attenuated by a programmable attenuator and filtered by a pink filter with 3 dB per octave rolloff. The output from the pink/white switch is amplified and output to the Noise Source BNC.

The 200V polarization supply consists of a low-power switching voltage regulator. This voltage is available at the microphone connector along with +28 Volts. The +28 Volt supply is generated on the A2 assebly and filtered on the A4 Noise Source board.

The overload detect curcuits monitor the un-filtered analog signal from the A3 Analog board. Additional overload detection is preformed by the A/D converters and the digital signal processor.

ROM Update Procedure

1. If you have important data stored in the 3569A, plot or transfer the data.
2. Follow the instructions for battery pack removal in the "Disassembly Instructions" of Chapter 8.
3. Remove the two ROMs using an IC extractor tool.
4. Install the new ROMs. Note the "U1" and "U2" markings near pin1 on the circuit board. The ROM IC packages have an indentation near pin 1.
5. Re-install the battery pack and replace the battery cover.
6. Turn the Analyzer on. While holding down the [**7**] key. Continue holding the key down for five seconds to start the self tests.
7. When the self tests are complete, press [**Enter**] to continue. Then press [**4**] to re-format the RAM disc

Troubleshooting

Introduction

This section contains troubleshooting tests that isolate failures to the assembly. These tests include initial verification, power-on test, self tests, and tests for miscellaneous failures and failing performance tests. This section also contains self-test descriptions.

Safety Considerations

The HP 3569A Real-Time Frequency Analyzer is a Safety Class II instrument. Although this instrument has been designed in accordance with international safety standards, this manual contains information, cautions, and warnings that must be followed to ensure safe operation and retain the HP 3569A Real-Time Frequency Analyzer in safe operating condition. Service must be performed by trained service personnel who are aware of the hazards involved (such as fire and electrical shock).

Warning

Under no circumstances should an operator remove any covers, screws, shields or in any other way access the interior of the HP 3569A Real-Time Frequency Analyzer (except the battery cover). There are no operator controls inside the analyzer.

Caution

Do not connect or disconnect cables with the analyzer turned on. Power transients caused by connecting or disconnecting a cable can damage circuit assemblies.

Equipment Required

- Digital Multimeter (1% accuracy)

How to Use This Section

Use the following steps to isolate failures to the assembly. See the disassembly/assembly illustrations in "Replaceable Parts," to determine how to disassemble and assemble the analyzer.

1. Review "Safety Considerations" and "Troubleshooting Hints."
2. Determine which troubleshooting test to start with by comparing your analyzer's symptoms to the symptoms in "Choosing a Troubleshooting Test."
3. Follow the recommended troubleshooting procedure until you locate the faulty assembly.
4. Replace the faulty assembly, and do the required adjustments and tests listed in "What to do after an Assembly is Replaced."

Troubleshooting Hints

- Cables can cause intermittent hardware failures.
- The LED blink routine will delay before and after blinking so you can distinguish these blinks from the power-on flash.
- If the instrument turns on with a normal display, but then immediately stops taking measurements ("hangs"), it may be due to corrupt data in memory. Follow the procedure to reset the analyzer. Try turning the analyzer off and then on again while holding down the [**7**] key. When the self tests have completed, press [**Enter**] when prompted and then press [**3**] to select "Clear-power-on state".

Choosing a Troubleshooting Test

Use table 9-1 to determine which troubleshooting test to begin with.

Test 1. Dead Instrument Test determines whether the source of the problem is the A3, A2, or A1 assembly.

Test 2. Display Test determines whether the source of the problem is the A1 DSP Board or the LCD display assembly.

Test 3. Battery Test determines whether the source of the problem is the ac adapter, A2 Main Board, charging circuits or battery pack charging capacity.

Note

The troubleshooting tests in this section assume only one independent failure. Multiple failures can cause false results.

Table 9-1. Troubleshooting Guide

Symptom	Troubleshooting Test
Screen remains blank when analyzer turns on	Test 1. Dead Instrument Test
Screen defective Screen remains blank but relays "click"	Test 2. Display Test
Battery will not charge	Test 3. Battery Test
Trigger fails External trigger fails	Self Tests If the Self Tests pass, suspect the A3 Analog assembly or a cable problem.
Nonvolatile states not saved after power cycled	Self Tests If the Self Tests pass, suspect the A2 Main assembly, check jumper P8.
Screen Defective intermittent problem	Self Tests
RS-232 fails	Suspect the A2 Main assembly.
Input fails	Self Tests If the Self Tests pass, suspect the A3 Analog assembly.

Table 9-1. Troubleshooting Guide (con't)

Symptom	Troubleshooting Test
Performance test fails	Self Tests If the self tests pass, perform the Adjustments. If the problem persists, suspect the A3 Analog assembly.
Backlight fails	Test 2. Display Test If the Display Test passes, suspect the A2 Main assembly.
Source Fails	Suspect the A4 Source Assembly

What to do after an Assembly is Replaced

After replacing an assembly, do the following:

1. Reinstall all assemblies and cables that were removed during troubleshooting.
2. Do the required adjustments listed in table 9-2 (see the Adjustments chapter in this section for individual adjustment procedures).
3. Cycle power on the HP 3569A.
4. Perform the Operation Verification test which is in the Installation section of this manual.
5. Do the required performance tests listed in table 9-2 (the performance tests are in the Installation section).

Table 9-2. Required Adjustments and Performance Tests

Assembly Replaced	Adjustments	Performance Tests
A1	None	Operation Verification
A2	#5. Real Time Clock	#10. Frequency Accuracy
A3	#1. Input Offset #2. 20 kHz #3. Analog -to-Digital Gain #4. Phase Match	All
A4	None	#8. Noise Source #11. Tranducer Power Supply
LCD Display	None	Opration Verification

Test 1. Dead Instrument Test

Before starting Test 1. Dead Instrument Test, check that the battery is charged by connecting the ac adapter. If the green AC Adapter LED on the analyzer's connector panel does not come on, go to "Test 3. Battery Test". For information on battery recharging, see the Installation section.

Use this test to check signals that are vital to the operation of the analyzer. The test uses a self test LED on the A2 Main assembly which normally flashes once when you turn the analyzer on and then remains on when the analyzer is operating (unless there is RS232 activity). When the analyzer's self tests run, this LED blinks and the beeper beeps a variable amount of times to indicate the source of problems to the assembly level.

1. Remove the battery cover, battery, bottom cover, A4 Noise Source assembly and A3 Analog assembly as outlined in the "Assembly/Disassembly" portion of the "Replaceable Parts" chapter.
2. Reconnect the battery at the battery connector.
   Press [**On**].
3. With the A3, A4 Analog assembly removed, the following messages should appear.

   DIGITAL TEST (A3) FAILED

   If only this message appears, the other assemblies are working fine and the A3 Analog assembly is the problem.
4. If the display remains blank, remove the A2 Main assembly from the instrument.

Caution Isolate the A2 Main assembly electrically to prevent any shorting of its pins or traces.

5. Connect the battery cable (P6) to the A2 Main assembly as shown in figure 9-1. Short TP4 "PWRUP" to TP3 "GND" to turn on the A2 Main assembly. Watch the self test LED for 20 seconds and listen for beeps. It may flash once at first, then blink and beep. Count the blinks/beeps to identify the failure.

Table 9-3. Self Test Led Troubleshooting

Blinks	Failure
2	A2 Main assembly ROM checksum
4	A2 Main assembly RAM
6	A1 DSP assembly display

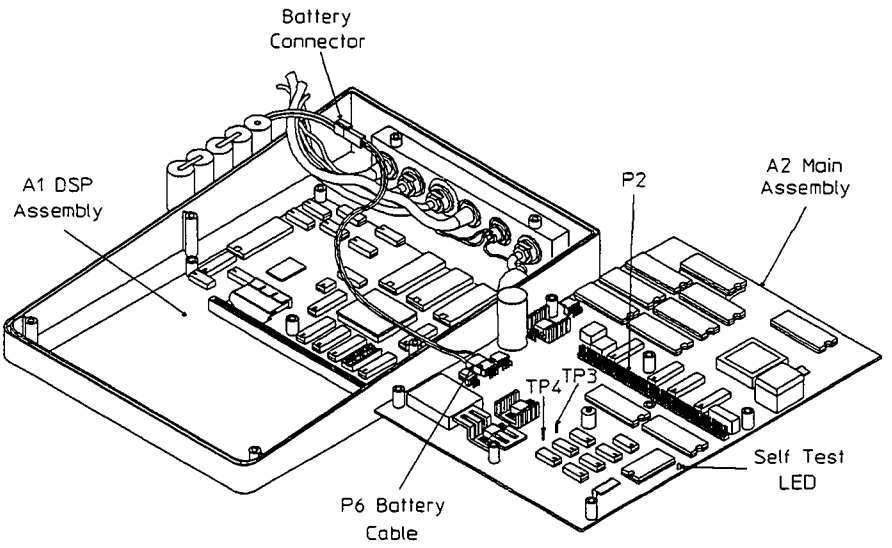

Figure 9-1.
Power up the A2 Main Assembly

With the A2 Main assembly disconnected from the A1 DSP assembly, the LED should blink 6 times. This means the A2 Main assembly is working. If the LED did not blink 6 times, replace the A2 Main assembly.

6. Check the dc voltage at the following pins of the P2 connector on the A2 Main assembly. Use TP1 "GND" for ground.

Table 9-4. P2 Connector Voltages

P2 Pin	Voltage
9	5 ± 0.4
10	–5 ± 0.4
14	5 ± 0.4
15	30 ± 5
16	–17 ± 5

If any of the voltages are incorrect, replace the A2 Main assembly.

7. If the A2 Main assembly is working properly, do the following.
   - Disconnect the battery cable P6.
   - Remove the short between TP4 and TP3.
   - Reconnect the A2 Main assembly to the A1 DSP assembly.
   - Reconnect the battery cable P6.
   - Turn the instrument on while watching the LED.

You should see no blinks. If six blinks occur, this indicates a failure of A1 DSP assembly.

Test 2. Display Test

If the screen is defective, perform this Display Test. Display problems can be caused by either the A1 DSP assembly or the LCD Display assembly.

1. Press [**On**] while watching the self test LED on the A2 Main board.
2. If it blinks 6 times, the problem is with the A1 DSP assembly. If it does not blink and the relays click after a few seconds, the problem is with the LCD Display assembly.

Test 3. Battery Test

Perform this test if the battery will not charge.

1. Connect the ac adapter to an ac power source and the HP 3569A. If the green LED above the AC Adapter connector does not light, suspect the ac adapter, the A2 Main assembly, or associated cables.
2. To check the charging circuits, leave the ac adapter connected at least 14 hours to allow the battery pack to fully charge. Open the battery compartment and feel the temperature of the battery pack. It should feel warm. If not, suspect the A2 Main assembly.
3. To check the battery capacity, fully charge the battery pack (as described in the previous step) and then disconnect the ac adapter. Press the following front panel keys.
   [**On**]
   [**Utility**]
   Move the column cursor to [MISC]
   Set [TIMEOUT:] to [OFF]
   [**Utility**]
   If a measurement is running, press [**Pause/Cont**].

   Leave the analyzer on and in this state for 4 hours. If it does not stay on, suspect the battery pack.

Troubleshooting using the Self Tests

A self test runs every time you turn on the analyzer. However, the following procedure runs a more extensive self test and displays the results.

1. Hold down the [**7**] key while pressing [**On**]. Keep holding down the [**7**] key for 5 seconds after releasing [**On**].

   The analyzer will take approximately 20 seconds to perform the self test. If no error messages appear, the display should show the self test results as in figure 11-2.

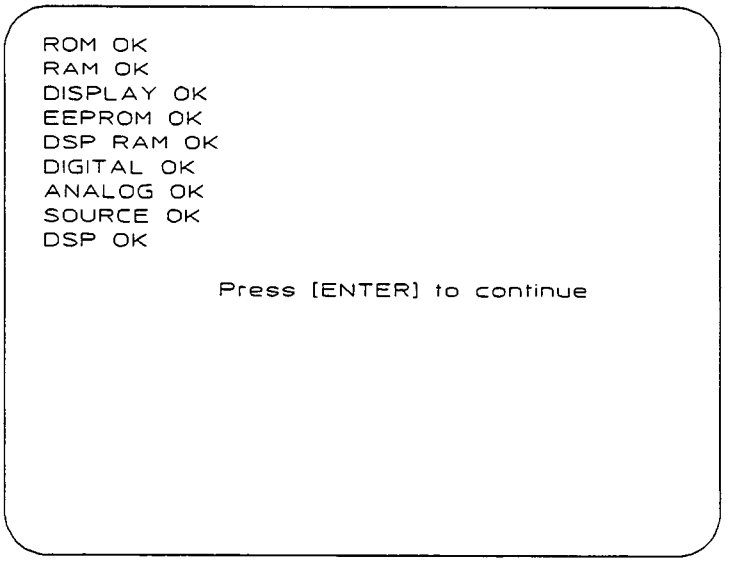

Figure 9-2.

If there is a problem with the memory, an error message such those shown in the following table will appear. The assembly most likely to cause the failure is indicated in parenthesis.

Table 9-5. Error Messages

Error Message	Assembly to be Replaced
FAILED ROM TEST	A2
FAILED RAM TEST	A2
FAILED DISPLAY TEST	A1
FAILED DSP RAM TEST	A1
FAILED DIGITAL TEST	A3
FAILED ANALOG TEST	A3
FAILED SOURCE TEST	A4
FAILED DSP TEST	A1

When the self tests have completed, a "Press ENTER to Continue" message will appear. Press [**Enter**].

Self-Test Descriptions

At power-on the main processor on the A2 assembly performs power-up tests. Holding down the [7] key as you turn the analyzer on initiates a longer (20 second) self-test.

ROM Test does a checksum on the ROMs. A failure blinks the self test LED, beeps 2 times and reports an error at the end of the display test.

RAM Test does a non-destructive test of RAM on the A2 Main assembly. A failure blinks the self test LED 4 times and reports an error at the end of the display test.

Display Test checks the display controller and its RAM. A failure blinks the self test LED 6 times. If the A1 DSP assembly is not connected, this is the first failure expected. After this test, the display is assumed to work and subsequent failures are reported on the display. Any previous test failures should be reported on the display with messages such as the following.

ROM TEST (A2) FAILED
RAM TEST (A2) FAILED
DISPLAY TEST (A1) FAILED

Source Test checks the A4 noise source circuits by internally connecting the noise source to channel 2 ADC. If the A4 noise source assembly is disconnected, this is the first "failure" expected. A failure produces the following message:

SOURCE TEST (A4) FAILED

DSP RAM Test checks the RAM on the A1 DSP assembly. A failure produces the following message.

DSP RAM TEST (A1) FAILED

Analog Board Digital Test checks the A3 Analog assembly by writing and reading registers in the timer chip (U23). If the A3 Analog assembly is disconnected, this is the first "failure" expected. A failure produces the following message.

FAILED DIGITAL TEST (A3) FAILED

Analog Board Analog Test checks the analog circuits by measuring the trigger level DAC with the channel 1 and channel 2 ADC. An incorrectly adjusted A3 board may cause this "failure". A failure produces the following message.

FAILED ANALOG TEST (A3) FAILED

EEPROM Test checks the Electrically Ereasable programable read only memory (EEPROM), which contains serial number and option information, A2, U41. A failure produces the following message:

EEPROM (A2 U41) FAILED

DSP Test checks the DSP by instructing it to execute a simple program. A failure produces the following message.

DSP TEST (A1) FAILED

Stuck Key Test checks for a front panel key pressed down. A failure produces the following message.

KEY DOWN Code = xx

Table 9-6. Key Codes

Key	Code
[0]	0
[1]	1
[2]	2
[3]	3
[4]	4
[5]	5
[6]	6
[7]	7
[8]	8
[9]	9
[.]	10
[+/-]	11
[⇐]	12
[⇒]	13
[⇓]	14
[⇑]	15
[Data]	16
[Freq]	17
[Start]	18
[Recall]	19
[Format]	32
[Input Source]	33
[Pause/Cont]	34
[Utility]	35
[Scale]	36
[Trigger]	37
[Avg]	38
[Inst mode]	39
[Enter]	40
[Shift]	48

Data Integrity Test performs a checksum on the data stored in RAM. A failure produces the following message.

Check sum error(s):
DISK ERROR:
press key to start diskfix

This message may occur if the analyzer is turned off while saving data.

Index

!

See the Dictionary Reference for all hardkeys, shift functions, menu items and connector panel items **1-24**

A

ac adapter
See also AC Adapter in Dictionary Reference
types **1-10**
accelerometer
electrical isolation **1-10**
See also Vibration Measurement Basics section
acoustic measurements
See also HP 3569A Operating Guide
See also OCT/3 CH1 in Dictionary Reference
acoustic weighting
See A-WEIGHT in Dictionary Reference
adjustments
recommended test equipment **1-24**
required after replacing assembly **9-5**
anti-alias filter
See FILTER in Dictionary Reference
archiving data
See also HP 3569A Operating Guide
See Standard Data Format Utilities User's Guide
assembly
/disassembly **6-6**
part numbers and locations **6-4**

B

backdating **7-1**
battery
charging **1-7**
removal **6-8**
bearing measurements
See HP 3569A Operating Guide
bins
See spectral lines
block diagram **8-3**

C

cable part numbers **6-5**
calibration
See also engineering units
See also performance tests
carrying case
cleaning **1-20**
installation **1-20**
cascade plot
See spectral map
channel 1/2 inputs
See input connectors
charging
See battery charging
circuit descriptions **8-1**
cleaning screen **1-16**
clock
See SAMPLE in Dictionary Reference
coherence
See COHER in Dictionary Reference
cross-correlation
See XCOR in Dictionary Reference

D

data transfer
See also HP 3569A Operating Guide
dead instrument test **9-6**
differentiate
See DIFF CH1/CH2 in Dictionary Reference
disassembly **6-6**

E

equipment list
See recommended test equipment
exchangable parts
See replaceable part numbers
exponential window
See also EXP TC: in Dictionary Reference
See also FORCE/EXP in Dictionary Reference
external sample connector
See also SAMPLE in Dictionary Reference
external trigger connector
See also EXTERNAL in Dictionary Reference

F

force window
See also FORCE %L in Dictionary Reference
See also FORCE/EXP in Dictionary Reference
frequency response
See FREQ RESP in Dictionary Reference
See also HP 3569A Operating Guide
front panel
troubleshooting **9-6**

G

grounding requirements **1-10**

H

hardware part numbers **6-6**

I

imbalance
See also HP3569A Operating Guide
See also orbit display
incoming inspection **1-5**
See also operation verification
See also performance tests
installation
See also battery charging
carrying case **1-20**
instrument description **8-2**
instrument state storage
See also SAVE STATE in Dictionary Reference
integrate
See INTEGR in Dictionary Reference

M

magnification of display
See scaling using arrow keys
maintenance
See performance test record
manual backdating **7-1**
memory
See also ERASE in Dictionary Reference
See also RESET in Dictionary Reference

N

network analysis
See frequency response
noise bandwidth
See PSD in Dictionary Reference
normalized bandwidth
See PSD in Dictionary Reference

O

octave analysis
See also OCT/3 CH1 in Dictionary Reference
See also Shift 6 in Dictionary Reference
once-per-rev pulse
See also HP 3569A Operating Guide
See Trigger in Dictionary Reference
operating environment **1-12**
operation overview
See also front panel overview
operation verification
recommended test equipment **1-24**
test duration **1-6**
optical encoder
See order analysis
oscilloscope operation
See time domain operation

P

part numbers
assemblies **6-4**
cables **6-5**
hardware **6-6**
parts
replaceable **6-6**
PC board
See assembly
performance tests
recommended test equipment **1-24**
required after replacing assembly **9-5**
test duration **1-6**
post-processing
See reprocessing
See also Standard Data Format Utilities User's Guide
power requirements **1-7**
power spectral density
See PSD in Dictionary Reference
power supply
See ac adapter
pulse encoder
See order analysis

R

recharging
See battery charging
recommended test equipment **1-24**
rectangular window
See UNIFORM in Dictionary Reference
reference signal
See also EXT in Dictionary Reference
See SAMPLE in Dictionary Reference
removal
See assembly/disassembly
repair
See troubleshooting
replaceable part numbers
assemblies **6-4**
cables **6-5**
hardware **6-6**
reprocessing
See also post-processing
ROM update procedure **8-11**
rpm
See order analysis
run-up test
See also HP 3569A Operating Guide

S

safety **9-1**
See also front matter
scaling
See also AUTOSCALE in Dictionary Reference
screen cleaning **1-16**
securing memory
See ERASE in Dictionary Reference
shaft motion
See orbit display
spectral density
See PSD in Dictionary Reference
SPL
See also sound pressure level
start frequency
See CENTER and SPAN in Dictionary Reference
stop frequency
See CENTER and SPAN in Dictionary Reference
storage requirements **1-22**
subtraction
See CH1 - CH2 in Dictionary Reference
suppression
See SUPP% in Dictionary Reference

T

tachometer
See order analysis
test
duration **1-6**
equipment **1-24**
troubleshooting **9-3**
theory of operation
See circuit descriptions
time record length
See data record length
transducers
electrical isolation **1-10**
transfer function
See frequency response
transmissibility
See frequency response
troubleshooting
a dead instrument **9-6**
guide **9-3**
hints **9-2**
recommended test equipment **1-24**

U

updating
See also manual backdating
ROMs **8-11**

V

velocity probe
See EXT START in Dictionary Reference
See also Vibration Measurement Basics section
verifying operation
See operation verification
verifying specifications
See performance tests
vertical magnification
See scaling using arrow keys

W

waterfall plot
See spectral map

About this edition

February 1995: In this edition, several key press commands were corrected in chapter 3, *Operation Verification and Test.*

February 1994: Previous edition.

Hewlett-Packard Sales and Service Offices

To obtain Servicing information or to order replacement parts, contact the nearest Hewlett-Packard Sales and Service Office listed in HP Catalog, or contact the nearest regional office listed below:

In the United States
California
P.O. Box 4230
1421 South Manhattan Avenue
Fullerton 92631

Georgia
P.O. Box 105005
2000 South Park Place
Atlanta 30339

Illinois
5201 Tollview Drive
Rolling Meadows 60008

New Jersey
W. 120 Century Road
Paramus 07652

In Canada
Hewlett-Packard (Canada) Ltd.
17500 South Service Road
Trans-Canada Highway
Kirkland, Quebec H9J 2M5

In France
Hewlett-Packard France
F-91947 Les Ulis Cedex
Orsay

In German Federal Republic
Hewlett-Packard GmbH
Vertriebszentrale Frankfurt
Berner Strasse 117
Postfach 560 140
D-6000 Frankfurt 56

In Great Britain
Hewlett-Packard Ltd.
King Street Lane
Winnersh, Wokingham
Berkshire RG11 5AR

In Other European Countries
Switzerland
Hewlett-Packard (Schweiz) AG
7, rue du Bois-du-Lan
Case Postale 365
CH-1217 Meyrin

In All Other Locations
Hewlett-Packard Inter-Americas
3155 Porter Drive
Palo Alto, California 94304

HP 35230A Sound
Intensity Probe

HP 35230A Sound Intensity Probe
Installation Guide

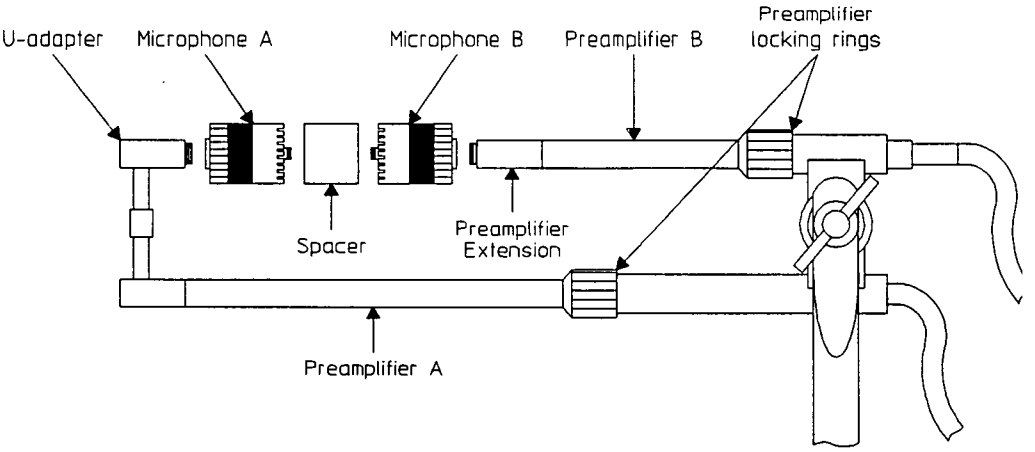

HEWLETT PACKARD

HP Part Number 35230-90001
Microfiche Part Number 35230-90201
Printed in U.S.A.

Print Date: March 1993
© Hewlett-Packard Company, 1993. All rights reserved.
8600 Soper Hill Road Everett, Washington 98205-1298 U.S.A.

Before you begin

Overview

The HP 35230A Sound Intensity Probe is ideal for sound power measurements, sound intensity surveys, or for noise source identification. The sound intensity probe consists of two microphones separated by a solid spacer and mounted face-to-face on phase matched preamplifiers in a probe frame. Careful phase- and amplitude-matching of the two probe microphones is required for accurate measurement of sound intensity using the two-microphone pressure-gradient technique. The probe frame fits into a handle which has a convenient gating push-button, a measuring LED, and an overload LED.

The HP 35230A Sound Intensity Probe includes the probe frame, handle, matched preamplifiers, 2-meter cable, wind screen, and carrying case. Microphones and spacers must be ordered separately.

Probe Performance

The performance of the HP 35230A Sound Intensity Probe is dependent on the choice of microphones. The probe is normally supplied with either the HP 35237A 1/2-inch microphone pair or the HP 35237B 1/4-inch microphone pair and a pair of 1/4-inch preamps. However, you can use the HP 35230A probe with 1/2-inch or 1/4-inch microphones and/or preamps supplied by other manufacturers—for example, Brüel and Kjær 4181 microphone capsules.

Kit Contents

The HP 35230A Sound Intensity Probe does not include microphones. The probe can be used with the following Hewlett-Packard microphones:

- HP 35237A 1/2" microphone pair with 12mm and 50mm spacers
- HP 35237B 1/4" microphone pair with 6mm and 12mm spacers

HP Part Number	Description
HP 35238A	1/4" Preamplifier Pair
35230-23701	Preamplifier Extension
35230-23702	U Adapter
35230-44601	Windscreen
35230-65001	Probe Handle Remote
35230-90001	Manual
5061-8038	Carrying Case
Option 001 add:	
HP 35237B	1/4-inch Matched Microphone Pair
Option 002 add:	
HP 35237A	1/2-inch Matched Microphone Pair

Replacement Spacers

Although the microphone spacers are supplied with each microphone pair, you can order extra spacers using the following part numbers:

HP Part Number	Description
35237-44703	6mm spacer, 1/4-inch
35237-44704	12mm spacer, 1/4-inch
35237-44701	12mm spacer, 1/2-inch
35237-44702	6mm spacer, 1/2-inch

Attaching the Probe to the Handle.

1 Insert the probe stick into the probe handle.

2 Tighten the locking ring.

3 Turn the preamplifier frame until it clicks into the desired position. The detent has catches at 0°, 90°, 180°, and 270° relative to the probe stick.

You may need to adjust the cables before turning the frame to some positions. The three cables are clipped together, but you can slide the cables in the clips to adjust the length.

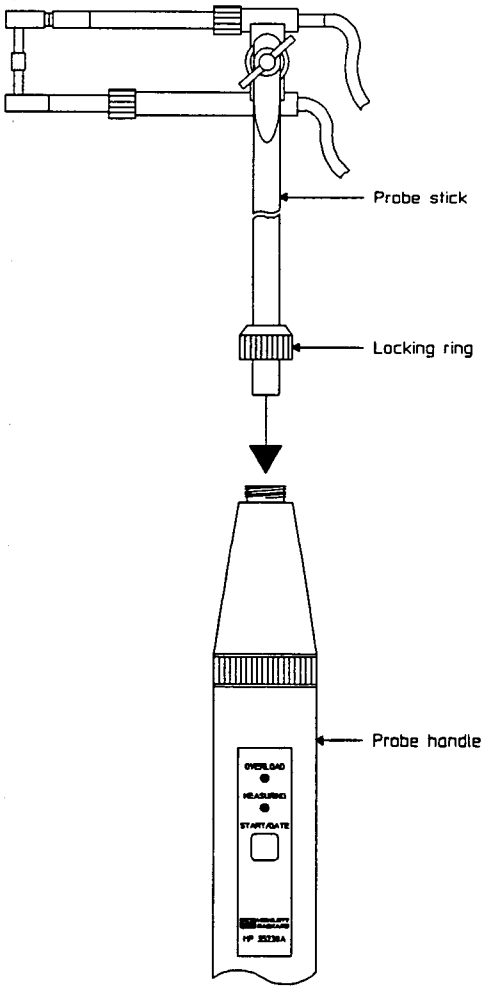

Attaching Microphones and Spacers

1 Loosen the preamplifier locking rings and slide amplifier A out far enough that the microphones and spacer will fit in the gap.

2 Screw microphone B onto preamplifier B.

3 Screw threaded end of spacer to microphone B.

4 Screw microphone A to the U-adapter.

5 Slide preamplifier A so that spacer is snug against both microphones.

6 Tighten preamplifier locking rings.

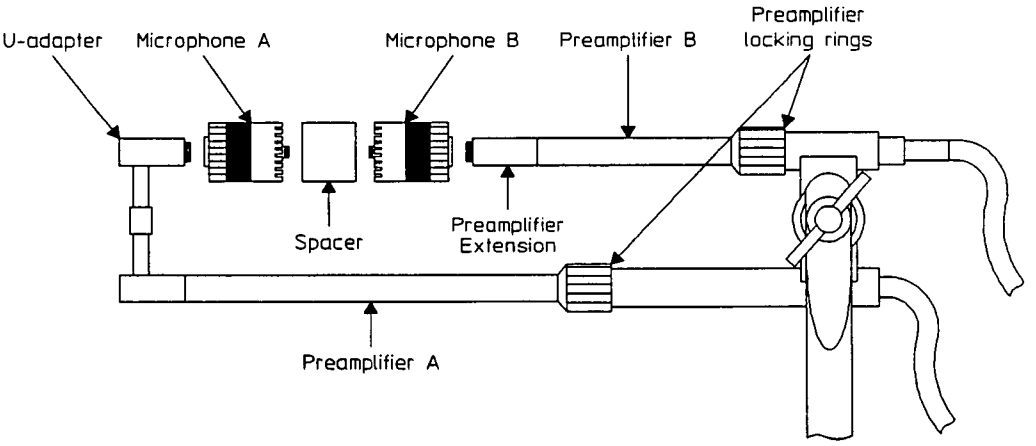

Connecting HP 35230A Probe to HP 3569A

When you use the HP 35230A probe with the HP 3569A analyzer, you do not need a separate power supply for the probe.

1 Connect the microphone cables to the analyzer's 7-pin input connectors.

The cable marked "1" or "A" goes to the analyzer's channel 1 input. The cable marked "2" or "B" goes to the analyzer's channel 2 input.

2 Connect the other cable to the analyzer's 15-pin Digital I/O connector.

Microphone Pin Assignments

Pin 1	Not assigned
Pin 2	Signal ground
Pin 3	+200 V
Pin 4	Signal
Pin 5, 6	+28 V
Pin 7	Chassis ground

Digital I/O Pin Assignments

Pin 1,7	Ground
Pin 2	"Overload" LED
Pin 3	SC1*
Pin 4	SC2*
Pin 5	Tape Recorder Control (open collector, 30 mA)
Pin 6	"Measure" LED
Pin 8	External Trigger†
Pins 9–15	not connected

* These pins are wired to the processor board but are not active at this time.

† This function is identical to the analyzer's External Trigger BNC.

Understanding the phase-match check

The first step in calibrating the sound-intensity probe is to calibrate the sensitivity of each microphone using a pistonphone, such as the HP 35233A. The acoustic signal excites the microphone diaphragm and includes the microphone preamplifier and analyzer input channel in the signal path. Measurement of a calibration factor in this way represents an end-to-end calibration of the system.

The pistonphone is calibrated to output a level very close to 124 dBSPL. To calibrate a microphone and analyzer input path, place the pistonphone over the face of the microphone and measure the signal generated by the analyzer. Since the pistonphone frequency is 250 Hz, a spectrum measurement will show a tone at this frequency. Most HP analyzers have a marker-to-peak operation, which will position the marker at the measured tone. Determining the Volts/EU sensitivity requires entering the calibration menu for the analyzer of choice. For the HP 3569A, [Shift] [MicCal] displays the calibration table and a subsequent [Shift] [3] prompts for entry of the specified calibration level of 124 dBSPL. For other analyzers, consult the operating manual to determine how to perform the "marker-to-peak" calibration.

The analyzer then computes the actual sensitivity and displays it. This value should be compared to that shown on the calibration sheet for a particular microphone. The values should be close, although will not be identical due to gain or attenuation in the microphone preamplifier.

Afterwards, you must determine the accuracy of the sound-intensity equipment by measuring the dynamic capability, L_d. For the HP equipment, this involves placing the HP 35230A sound intensity probe into a cavity calibrator designed for this purpose, the HP 35236A, and using the analyzer's pink noise source to excite both intensity microphones with the identical signal (this process is described in the sound intensity instrumentation standard, IEC 1043). In theory, no net intensity should be measured—however, in practice, this does not happen since there are always small phase errors in the microphones, preamplifiers, and analyzer.

Since the intensity inside the calibrator should average to zero, then we can measure the effective inaccuracy due to phase errors in the instrumentation by viewing the pressure residual intensity index, $P\text{–}I_{(residual)}$, defined as the difference in decibels between the measured pressure and intensity in the calibrator. Hewlett-Packard Application Note 1230 describes why the dynamic capability L_d is related to $P\text{–}I_{(residual)}$ by a fixed offset, for example, $L_d = P\text{–}I_{(residual)} - K$. For measurement accuracy to grades 1 or 2 (precision or engineering grades), ISO 9614 defines a K equal to 10 (equivalent to a 0.5 dB measurement accuracy).

Equipment Required

- O HP 35233A Pistonphone
- O HP 35236A Cavity Calibrator

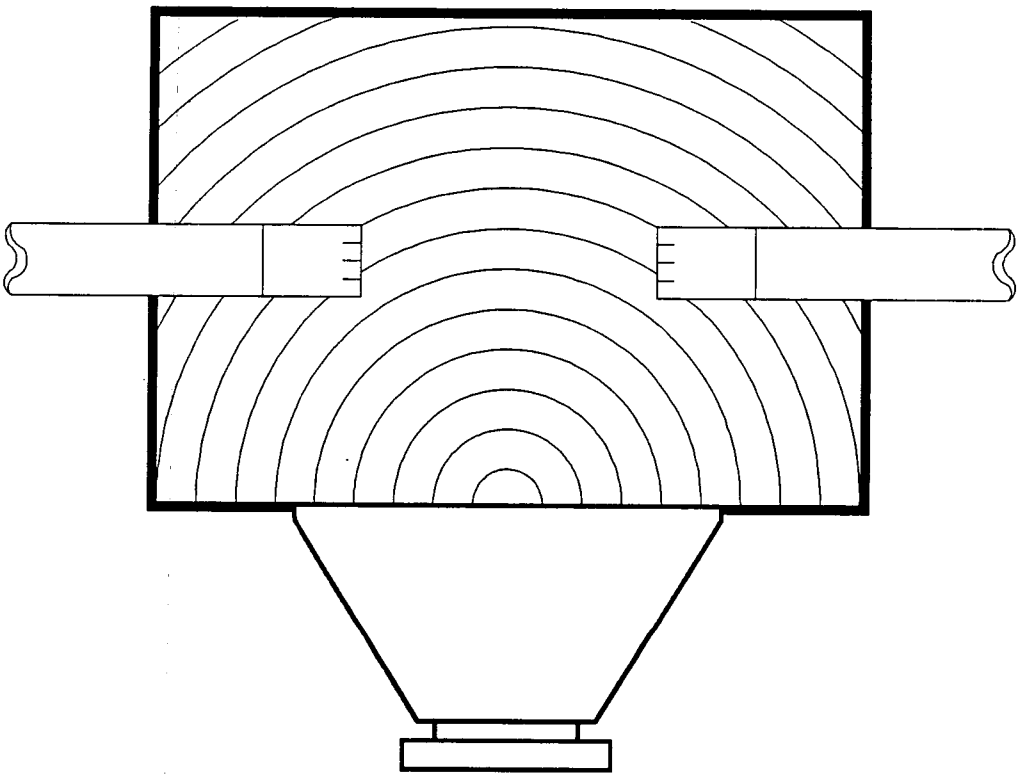

Checking phase-match for 1/4-inch microphones (simplified drawing)

Preparing the cavity calibrator (for all 1/4-inch microphones)

1 Loosen the preamplifier locking rings and slide out amplifier A slightly.

2 Remove the spacer.

3 Slide out amplifier A enough so that the space between the microphones clears the edges of the cavity calibrator.

4 Put the 1/4-inch adapter over the preamp.

5 Repeat for the other microphone/preamp assembly.

6 Insert microphone B into one of the calibrator so that the 1/4-inch adapter is fully seated.

7 Gently push in amplifier A until the microphone A adapter is fully seated inside the calibrator.

8 Tighten the preamplifier locking rings.

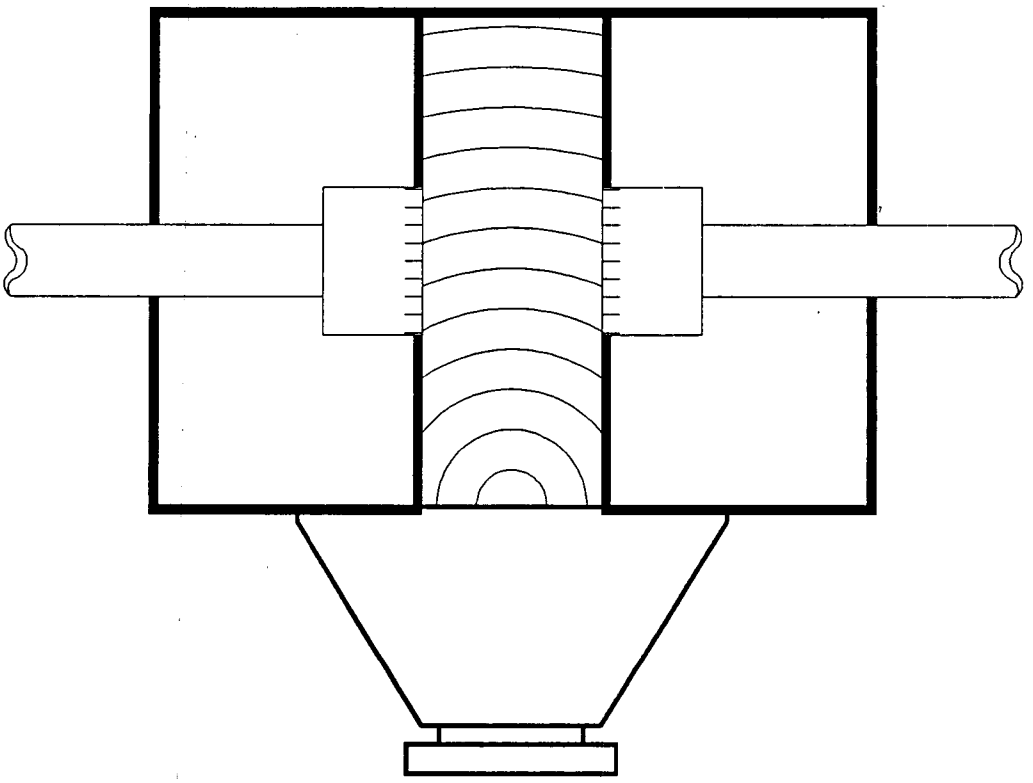

Checking phase-match for 1/2-inch microphones above 100 Hz (simplified drawing)

Preparing the cavity calibrator for testing above 100 Hz (for all 1/2-inch microphones)

Note

If you are using Brüel and Kjær microphones with damped venting—for example, the BK 4181—this procedure also applies to phase-performance testing in the 50 to 100 Hz range.

You must follow these procedures carefully to make a meaningful phase-calibration check of your sound-intensity probe.

1 Loosen the preamplifier locking rings and slide out amplifier A slightly.

2 Remove the spacer.

3 Slide out amplifier A enough so that the space between the microphones clears the edges of the cavity calibrator.

4 Carefully place a 1/2-inch adapter collar over each microphone.

5 Insert microphone B into one of the calibrator so that the microphone is pressed all the way into the adapter.

There is an inner O-ring in the 1/2-inch adapter—make sure you push the microphone past this O-ring to fully seat the microphone inside the calibrator.

6 Gently push in amplifier A until microphone A is full seated inside the other adapter.

7 Tighten the preamplifier locking rings.

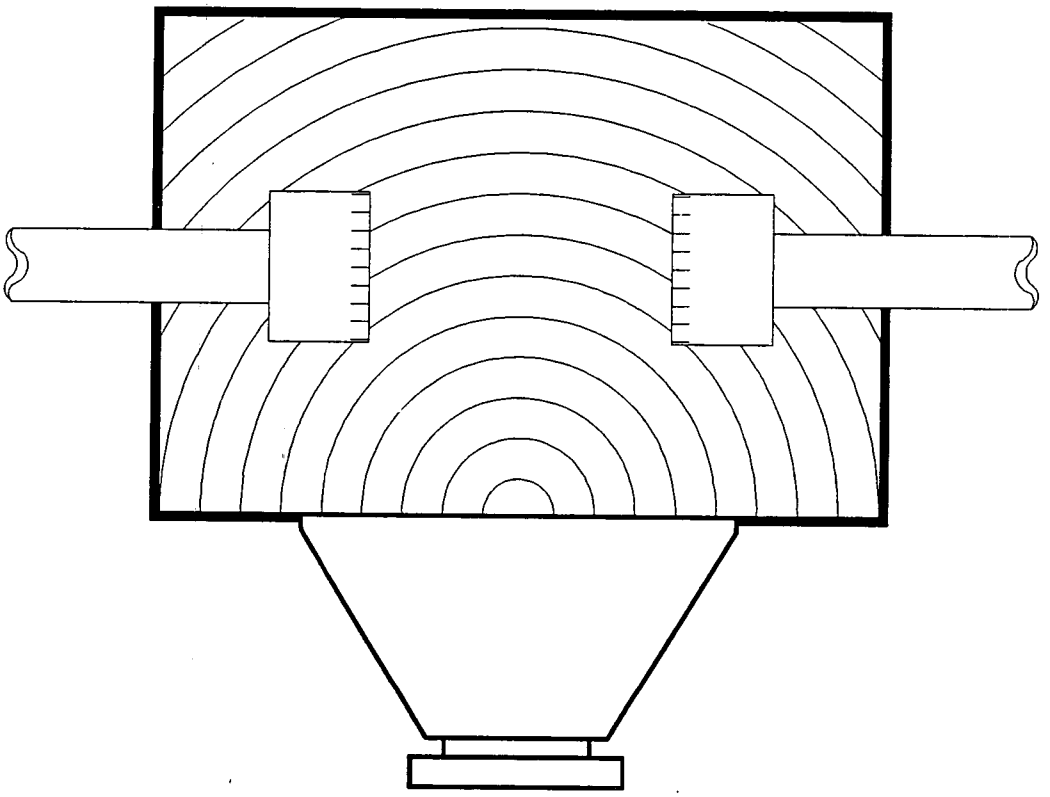

Checking phase-match for 1/2-inch microphones below 100 Hz (simplified drawing)—note how rear vents are exposed to the pressure inside the cavity

Preparing the cavity calibrator for testing below 100 Hz (for 1/2-inch microphones with conventional rear-venting)

Note

If you are using Brüel and Kjær microphones with damped venting—for example, the BK 4181—this procedure is not required since the low-frequency phase performance of these microphones can be checked with setup on the previous page.

1 Loosen the preamplifier locking rings and slide out amplifier A slightly.

2 Remove the spacer.

3 Slide out amplifier A enough so that the space between the microphones clears the edges of the cavity calibrator.

4 Unscrew the 1/2-inch capsule from its 1/4-inch preamp.

5 Put the 1/4-inch adapter over the preamp.

6 Screw on the capsule.

7 Repeat for the other microphone/preamp assembly.

8 Insert microphone B into one of the calibrator so that the 1/4-inch adapter is fully seated.

9 Gently push in amplifier A until the microphone A adapter is fully seated inside the calibrator.

10 Tighten the preamplifier locking rings.

Checking phase-match of the assembled probe

This procedure is used to qualify the phase-match of the microphone pair on a sound-intensity probe. It requires a sound-intensity cavity calibrator that is compatible with your sound-intensity probe. *Before starting this task, make sure you have completed the procedures shown in "Preparing the cavity calibrator."*

1 Measure, store, and assign calibration factors for each microphone/input channel combination as described in the operating manual for your analyzer. You can use either a pistonphone or an electronic calibrator.

Note

Keep in mind that when you perform a microphone calibration, you are changing the analyzer's input sensitivity to yield accurate results with a particular microphone when used with a particular input channel. To ensure maximum accuracy, re-calibrate when connecting the microphone to the other input channel or to another analyzer.

2 Select Intensity mode on your analyzer.

3 Enter the length of the microphone spacer on your sound-intensity probe.

Because phase accuracy depends on the microphone spacing, make sure the value you enter for microphone separation corresponds to the microphone spacer installed on your sound-intensity probe (for example, 6mm, 12mm, or 50mm).

Remember, you are not going to use the spacer for this procedure—you just need to enter the value to ensure that the analyzer calculates sound-intensity correctly.

4 Select auto-ranging.

5 Select frequency resolution and start/stop frequencies appropriate for your intensity measurement.

Microphone configuration	Normal Frequency Range
1/2-inch pair, 12mm spacing	100 to 5000 Hz
1/2-inch pair, 50mm spacing	50 to 1250 Hz
1/4-inch pair, 6mm spacing	200 to 10000 Hz
1/4-inch pair, 12mm spacing	200 to 5000 Hz

Note

1/4-inch microphones can be phase-checked only to 1250 Hz using the HP 35236A Cavity Calibrator. 1/2-inch microphones can be phase-checked to 5000 Hz using the 1/2-inch collar adapters.

6 Select linear averaging and select a long integration time (120 seconds or longer).

Keep in mind that the longer the integration time, the more accurately the phase match can be measured—this is particularly true for the lower octave bands.

7 Turn off measurement repeat. Select a waterfall or multi-spectrum depth of 1.

8 Display the P–I Index.

This selects the P–I index, which displays "pressure minus intensity" data.

9 Connect the analyzer's source to the cavity calibrator.

10 Select the pink noise and the source attenuation to a level appropriate for the cavity calibrator.

For 1/2-inch microphones with typical sensitivity of 15 mV/Pa, a level of 130 dBSPL with a –10 dB attenuation would be appropriate.

11 At this point, the microphone end of the probe should be inside the cavity calibrator as outlined in "Preparing the cavity calibrator" (earlier in this booklet).

Make sure you have removed the microphone spacer before putting the probe into the calibrator—and remember that you must enter the correct spacer distance into the analyzer (refer to your analyzer's operating manual).

12 Begin the measurement.

13 After the measurement completes, move the marker to each octave band and verify that the probe's phase-match performance meets (or exceeds) the specifications for your sound-intensity measurements.

14 If you need to re-configure that calibrator—for example, to check the phase-match at frequencies below 100 Hz—repeat steps 11 and 12.

See "Preparing the cavity calibrator."

Because the cavity calibrator provides sound pressure (with minimal sound intensity), the P–I data should reveal positive sound-pressure values at each octave—for example, 20 dB. This ensures that your sound-intensity probe has the phase-match required for accurate sound intensity measurements. For example, current ECMA standards require that a sound-intensity probe must exhibit positive $P–I_{(residual)}$ levels of 15 dB or greater when tested with a cavity calibrator.

See also the "Understanding the phase-match check" sidebar earlier in this chapter.

Performance in Standing Wave Field

Although not required for routine calibration, you can use the procedures outlined in IEC 1043 to measure sound-intensity flatness in a standing wave field. The illustration below shows the response of a typical HP 35230A Sound Intensity Probe with an HP 35237A 1/2-inch phase-matched microphones in a standing wave tube as specified by IEC 1043, section 12.3. The excitation frequency is 125 Hz and the standing-wave ratio is 20 dB.

Typical performance of sound-intensity probe in a standing wave tube.

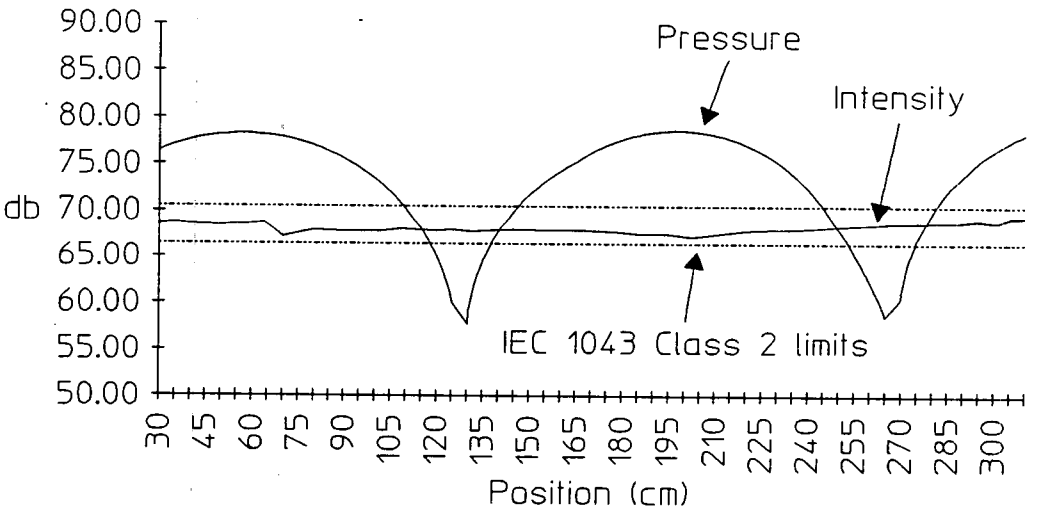

Supplied Calibration Plots

Each pair of phase-matched intensity probe microphones is supplied with individual phase-difference plots. These plots are valuable documents and should be stored in a safe place. If you need to use these plots while making measurements, consider photocopying the originals and keeping the copies in probe's carrying case.

Phase-difference plots are obtained with a cavity calibrator for frequencies below 1.6 kHz and with an electrostatic actuator for frequencies above 1 kHz.

Specifications

Electrical specifications

Sound Intensity:	18 dBA ≤ SI ≤ 140 dBA relative to 1 pW
Sound Pressure Level:	18 dBA ≤ SPL ≤ 140 dBA relative to 20 μPa
Transducer Sensitivity:	–36 dB relative to 1 V/Pa, using HP 35237A microphone (1/2-inch)

Reference Point, Probe Axis, Reference Direction

See Hewlett-Packard Application Note 1230, *Sound Power Measurements.*

S E R V I C E N O T E

SUPERSEDES: 3569A-01

HP 3569A Real-Time Frequency Analyzer

Serial Numbers: 0000A00000/3405A00292

HP 3569A firmware revision history

To be performed by: HP-Qualified Personnel or Customer

Parts Required:

HP P/N	Description
03569-84402	Firmware Upgrade Kit

Situation:

New firmware revision fixes several software defects found in previous versions. The upgrade kit contains new EPROM's, new manuals, an installation note, and an IC extractor.

Continued

DATE: December 1994

ADMINISTRATIVE INFORMATION

SERVICE NOTE CLASSIFICATION:

MODIFICATION RECOMMENDED

ACTION CATEGORY:	☐ IMMEDIATELY ☐ ON SPECIFIED FAILURE ■ AGREEABLE TIME	STANDARDS: LABOR 0.5 Hours		
LOCATION CATEGORY:	■ CUSTOMER INSTALLABLE ☐ ON-SITE ■ HP LOCATION	SERVICE INVENTORY:	☐ RETURN ■ SCRAP ☐ SEE TEXT	USED PARTS: ☐ RETURN ■ SCRAP ☐ SEE TEXT
AVAILABILITY:	PRODUCT'S SUPPORT LIFE	HP RESPONSIBLE UNTIL: December 1996		
AUTHOR: DLC	ENTITY: A100	ADDITIONAL INFORMATION: A1-9410010		

© 1994 HEWLETT-PACKARD COMPANY
PRINTED IN U.S.A.

HEWLETT PACKARD

List of changes by revision:

A.00.07 (new revision)

- Corrects Leq calculation.
- Corrects computation of CDF, PDF, Ln on recalled multispectrum.
- Disables dither during short integration times.
- Band power marker now works on linear y-axis traces.
- Provides field indicators required by Sound Power standards.
- Provides correct Time and Date on Recalled Multispectrum plots.

A.00.03

- Fixed Full Octave filter shape (rolls off too fast).
- Fixed display update for a FORMAT change from CDF to PDF.
- Removed error message when saving RT Intensity Multispec after Delete All.
- Corrected divide by zero after entering 4E-3 in [Meas Dur].
- Provided ability to measure Leq instead of L(User).
- Corrected frequency inaccuracy after changing Stop F in Reverb.
- Corrected [Scale] [Ingegrate] graphics scaling.
- Corrected [Scale] [Integrat] with [Zoom] ON trace scaling.
- Corrected Y-axis labels with [Y-axis] [Log Mag].
- Places octave L Band Marker in A Band on screen dump.
- Made g's available in cal table.
- Corrected Trigger delay in Status Screen.
- Unlatched Overloads when not measuring.
- Unlatched overload LED.
- Provided hi-pass filters on both channels.

A.00.01

The original version shipped.

Solution/Action:

1. Turn the instrument on.
2. Press keys [SHIFT] and [1].
3. Read the firmware revision number in the upper right corner of the display.

If the revision is older than A.00.07, order the firmware update kit (p/n 03569-84402) and install two new EPROM's as per kit installation note instructions.

Warning:

The EPROM installation must be performed at a static protected workstation to prevent static discharge to the EPROM's and PC assembly.

Copy all stored 3569A files to a PC, as they will be lost due to the EPROM change.

S E R V I C E N O T E

SUPERSEDES

HP 3569A Real-Time Frequency Analyzer

Serial Numbers: 0000A00000 / 3320A00214

Pressure Residual Intensity Index Spec Failure on Most Sensitive Input Range

Parts Required:

HP P/N	Description
03569-69503	Analog assembly

Situation:

A 3569A specification failure was discovered during operation. The specification that fails is "Pressure Residual Intensity Index", which is a measure of the phase match between channels. The failure only occurs on the most sensitive input range (5mV or 70 dBSPL). Other ranges are within specification.

Solution/Action:

The A3 analog assembly, with DATECODE 3337 and greater, has been modified to eliminate a trace capacitance problem on the assembly. The serial number prefix for the 3569A changed to 3337A to indicate that the modified A3 assembly was installed in the 3569A at the factory. Replace the A3 analog assembly when failing the above specification on the 5mV (70 dBSPL) range. See the "HP 3569A Installation and Service Guide" for more information on disassembly and replacement instructions.

DATE: 30 September 1993

ADMINISTRATIVE INFORMATION

SERVICE NOTE CLASSIFICATION:

MODIFICATION RECOMMENDED

ACTION CATEGORY:	☐ IMMEDIATELY ☐ ON SPECIFIED FAILURE ■ AGREEABLE TIME	STANDARDS: LABOR Hours		
LOCATION CATEGORY:	■ CUSTOMER INSTALLABLE ☐ ON-SITE ■ HP LOCATION	SERVICE INVENTORY:	☐ RETURN ■ SCRAP ☐ SEE TEXT	USED PARTS: ☐ RETURN ■ SCRAP ☐ SEE TEXT
AVAILABILITY:	PRODUCT'S SUPPORT LIFE	HP RESPONSIBLE UNTIL: 30 September 1995		
AUTHOR: DAA	ENTITY: A100	ADDITIONAL INFORMATION:		

© 1993 HEWLETT-PACKARD COMPANY
PRINTED IN U.S.A.

HEWLETT PACKARD

S E R V I C E N O T E

SUPERSEDES: NONE

HP 3569A Real-Time Frequency Analyzer

Serial Numbers: 0000A00000/3442A00293

Power off failure discharges battery

Duplicate Service Notes: 3560A-02

To be performed by: HP-Qualified Personnel

Parts Required:

HP P/N	Description
03569-69502	Exchange A2 assembly

Situation:

Some instruments may not power off completely when turned off. Symptoms are horizontal lines remaining on the display after the power is turned off, and a dead battery after the instrument has been turned off for several days.

Solution/Action:

Replace the A2 assembly. A2 assemblies that have been modified to prevent this failure have a date code of 3443 or greater.

See the "HP 3569A Installation and Service Guide" for disassembly and replacement instructions.

DATE: February 1995

ADMINISTRATIVE INFORMATION

SERVICE NOTE CLASSIFICATION:

MODIFICATION RECOMMENDED

ACTION CATEGORY:	☐ IMMEDIATELY ■ ON SPECIFIED FAILURE ☐ AGREEABLE TIME	STANDARDS: LABOR 1.0 Hours			
LOCATION CATEGORY:	☐ CUSTOMER INSTALLABLE ☐ ON-SITE ■ HP LOCATION	SERVICE INVENTORY:	■ RETURN ☐ SCRAP ☐ SEE TEXT	USED PARTS:	■ RETURN ☐ SCRAP ☐ SEE TEXT
AVAILABILITY:	PRODUCT'S SUPPORT LIFE	HP RESPONSIBLE UNTIL: February 1997			
AUTHOR: DLC	ENTITY: A100	ADDITIONAL INFORMATION: PCO A1-9410072			

© 1995 HEWLETT-PACKARD COMPANY
PRINTED IN U.S.A.

HEWLETT PACKARD