Advanced Test Equipment Rentals
www.atecorp.com 800-404-ATEC (2832)

# Errata

**Title & Document Type:** 3580A Spectrum Analyzer Operating and Service Manual

**Manual Part Number:** 03580-90003

**Revision Date:** July 1980

---

## HP References in this Manual

This manual may contain references to HP or Hewlett-Packard. Please note that Hewlett-Packard's former test and measurement, semiconductor products and chemical analysis businesses are now part of Agilent Technologies. We have made no changes to this manual copy. The HP XXXX referred to in this document is now the Agilent XXXX. For example, model number HP8648A is now model number Agilent 8648A.

## About this Manual

We've added this manual to the Agilent website in an effort to help you support your product. This manual provides the best information we could find. It may be incomplete or contain dated information, and the scan quality may not be ideal. If we find a better copy in the future, we will add it to the Agilent website.

## Support for Your Product

Agilent no longer sells or supports this product. You will find any other available product information on the Agilent Test & Measurement website:

www.tm.agilent.com

Search for the model number of this product, and the resulting product page will guide you to any available information. Our service centers may be able to perform calibration if no repair parts are needed, but no other support from Agilent is available.

Agilent Technologies

OPERATING AND SERVICE MANUAL

# SPECTRUM ANALYZER

## 3580A

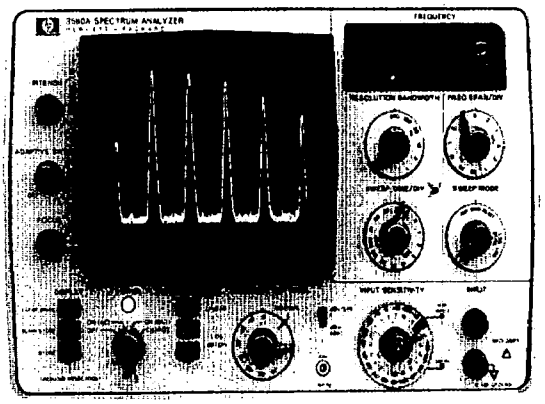

HEWLETT PACKARD

-hp- 3580A

HEWLETT PACKARD

# OPERATING AND SERVICE MANUAL

# MODEL 3580A SPECTRUM ANALYZER

**Serial Number: 2030A04281**

**IMPORTANT NOTICE**

If the Serial Number of your instrument is lower than the one on this title page, the manual contains revisions that do not apply to your instrument. Backdating information given in the manual adapts it to these earlier instruments.

Where practical, backdating changes are given on the schematic diagrams. These changes are indicated by a dagger sign (†) which refers to the corresponding backdating note on the schematic or apron page. Backdating changes not given on the schematics are flagged by a numbered delta ($\Delta_1$) which refers to the corresponding numbered change in the Backdating Section (Section VIII).

**WARNING**

*To help minimize the possibility of electrical fire or shock hazards, do not expose this instrument to rain or excess moisture.*

**Manual Part No. 03580-90003**

**Microfiche No. 03580-90093**

©Copyright Hewlett-Packard Company 1973
P.O. Box 301, Loveland, Colorado 80537 U.S.A.

**Printed: July 1980**

HEWLETT PACKARD

# MANUAL CHANGES

Model Number: **3580A**
Manual Print Date: July, 1980
Manual Part Number: 03580-90003
Microfiche Part Number: 03580-90093

**New or Revised Item**

This supplement contains important information for correcting manual errors and for updating the manual to instruments containing improvements made after printing of the manual.

To use this supplement:

1. Make all Manual **ADDENDA** and **ERRATA** changes.

2. Make all additional changes that pertain to your instrument serial number only.

**ERRATA**

**Title Page:** Change Serial Number to: 2030A6633

**Page 1-0, OUTPUTS.** Change "X-Asis" and "Y-Asis" to read "X-Axis" and "Y-Axis" respectively.

**Page 1-2, Table 1-2, INPUT CHARACTERISTICS.** Change to read "impedance".

**Page 2-2, Paragraph 2-21.** Change to read "Part Number 03580-90003".

**Page 4-5, Paragraph 4-48,** line 3. Change "rearon" to "reason".

**Page 4-20,** a) **Paragraph 4-130**, line 2. Delete "the 8-bit latch".

b) **Paragraph 4-131**, line 4. Delete "The output of the D to Converter, ranging dc level".

**Page 4-26, Figure 4-27.** Change reference designator to "U7B" for IC in lower right corner.

**Page 5-3, Paragraph 5-15,**

a) Step a, line 2. Change "reuqire" to "require".

b) Step e, Change "CWW" to "CCW".

**Page 5-4, Paragraph 5-20,** step c. Change "relesting" to "releasing".

**Page 5-5, Table 5-3.** After -80 dBm 900 ohm change "-67.99 dBm" to "-67.45 dBm".

**Page 5-6, Paragraph 5-24,** step c, line 2. Change "900%" to "900 ohm".

**Page 5-7, Table 5-9.** Change Display Indication for .2 mV to "full scale (±6%)."

**Page 7-5, Paragraph 7-14,** step g. Change "repedatively" to "repetitively".

**Page 7-15/7-16.** For option 002 footnote change R47 to 5.49K.

**Page 7-17.** Below the component locator, change REV B to REV C. The capacitors C2 and C15 were physically lowered on the board. No electrical changes have been made to the board.

**Page 8-45/8-46.** Insert the attached page 8-46a following the current page 8-46.

**CHANGE NUMBER 1 FOR ALL SERIAL NUMBERS**

**Page v, Section III.**

Add: 3-11. Rear Panel Display Adjust ... 3-30

**Page 1-0, Table 1-1.** Line Related Spurious: Change to: >80 dB below input reference level or -135 dBV (0.18uV)

**Page 1-1, Paragraph 1-8.** Change Field Installation Kit part number to: Battery Pack only 03580-69508

**Page 2-1, Figure 2-1.** Delete Cable: HP 8120-0684.

**Page 2-2.** Add the following paragraph:

**2-22** Option 001 for internal rechargeable battery pack may be installed in the field by the following procedure:

a. Turn power OFF and disconnect the power cord.

b. Remove the bottom cover.

c. Insert the battery pack in the space provided.

d. Attach 2 each of screws provided through each of the side panels to the battery pack.

e. Connect battery plug to switch assembly A10 P1, located near front.

f. Replace the bottom cover.

**Page 3-3/3-4.** Replace with attached Page 3-3/3-4.

**Page 3-29/3-30.** Replace with attached Page 3-29/3-30.

**Page 5-1/5-2.** Replace with attached Page 5-1/5-2.

**Page 5-9/5-10.** Replace with attached Page 5-9/5-10.

**Page 5-11/5-12.** Replace with attached Page 5-11/5-12.

**Page 5-13/5-14.** Replace with attached Page 5-13/5-14.

**Page 5-15/5-16.** Replace with attached Page 5-15/5-16.

**Page 5-17/5-18.** Replace with attached Page 5-17/5-18.

**Page 5-27/28.** Replace all **PERFORMANCE CARDS** following page 5-28 with **PERFORMANCE CARDS** (pages 1 to 5) attached.

**Page 6-3/6-4.** Replace with attached Page 6-3/6-4.

**Page 6-5/6-6.** Replace with attached Page 6-5/6-6.

**Page 6-7/6-8.** Replace with attached Page 6-7/6-8.

**Page 6-9/6-10.** Replace with attached Page 6-9/6-10.

**Page 6-11/6-12.** Replace with attached Page 6-11/6-12.

**Page 6-13/6-14.** Replace with attached Page 6-13/6-14.

**Page 6-17/6-18.** Replace with attached Page 6-17/6-18.

**Page 6-19/6-20.** Replace with attached Page 6-19/6-20.

**Page 6-23/6-24.** Replace with attached Page 6-23/6-24.

**Page 6-29/6-30.** Replace with attached Page 6-29/6-30.

**Page 6-31/6-32.** Replace with attached Page 6-31/6-32.

**Page 6-33/6-34.** Replace with attached Page 6-33/6-34.

**Page 6-35/6-36.** Replace with attached Page 6-35/6-36.

**Page 7-21/7-22.** Change page number 7-21/7-22 to 8-47/8-48 and move to follow the previously inserted page 8-46a. Insert attached replacement page 7-21/7-22.

**Page 7-23/7-24.** Change page number 7-23/7-24 to 8-49/8-50 and move to follow the previously inserted page 8-48. Insert attached replacement page 7-23/7-24.

**Page 7-24(a)/7-24(b).** Replace with attached Page 7-24(a)/7-24(b).

**Page 7-25/7-26.** Change page number 7-25 to 8-51/8-52 and move to follow the previously inserted page 8-50. Insert attached replacement page 7-25/7-26.

**Page 7-27/7-28.** Change page number 7-27 to 8-53/8-54 and move to follow the previously inserted page 8-52. Insert attached replacement page 7-27/7-28.

**Page 7-29/7-30.** Change page number 7-29 to 8-8a/8-8b and move to follow page 8-7/8-8. Insert attached replacement page 7-29/30.

**Page 7-31/7-32.** Change page number 7-31 to 8-55/8-56 and move to follow the previously inserted page 8-54. Insert attached replacement page 7-31/32.

**Page 8-16.** Insert after page 8-16 the attached page 8-16a/8-16b.

**Page 8-24. Paragraph 5-35.**

a. Specification. Change to read: >80 dB below input reference level or -135 dBV (0.18 $\mu$V).

b. Step f, line 3: Change (-140 dBV) to: (-135 dBV).

**Page 8-25/8-26.** Replace with attached Page 8-25/8-26.

**CHANGE NUMBER 2 applies to serial number 2030A06030 and greater.**

**Page 5-22, Paragraph 5-77,** step k. Replace step k with the following:

k. Adjust the rear panel VERTICAL DISPLAY ADJUST position control to the center of its range. Δ 21

Center the following pots:

A4R7, A4R8, A4R9, A4R10, A4R3 and A4R4

**CHANGE NUMBER 3 applies to serial number 2030A06029 and lower.**

**Page 8-7(a)/8-7(b), Figure 8-6(a).**

If an instrument with serial number 2030A06029 or lower has an A13 Rev A board replaced with an A13 Rev B board then insert the following components into the A13 Rev B circuit board.

| | | |
|---|---|---|
| R37 | 100 ohm | 0757-0401 |
| R38 | 100 ohm | 0757-0401 |
| R39 | 10K ohm | 2100-3210 |

**CHANGE NUMBER 4 applies to serial number 2030A04461 and greater.**

**Page 8-7(a)/8-7(b) Figure 8-6(a).**
On the schematic for A8, located near the center of the page, add C34 between the -10V2 line from L2 and V2 ground. Note: Part A8C34 is mounted on pins between R42 and Q2 emitter.

**CHANGE NUMBER 5 applies to serial number 2030A05376 and greater.**

**Page 8-24, Paragraph 5-34.** Add the following note:

NOTE: The removable of A16C31 and A16C32 eliminates the need to perform the Spurious Response Test. For serial numbers 2030A05375 and below see Change No. Δ 19.

(22) AMPLITUDE REF LEVEL Switch: Operates in conjunction with INPUT SENSITIVITY switch to establish full-scale sensitivity and measurement range. In linear mode it controls the IF attenuation. When rotated in a clockwise direction, full-scale sensitivity increases in a 20 V, 10 V, 2 V, 1 V sequence (Paragraph 3-55). In the Log 10 dB mode, changing the Amplitude Ref Level setting offsets the entire display in 10 dB increments (Paragraph 3-69). In Log 1 dB mode, the Amplitude Ref Level control offsets the display to select any 10 dB portion of the 80 dB range (Paragraph 3-71).

(23) LOG 1 dB Button: (push to set; push LIN or LOG 10 dB to release) Selects Log 1 dB amplitude mode. Display sensitivity is 1 dB per division; display range is 10 dB. Any 10 dB portion of the 80 dB range can be displayed by changing the AMPLITUDE REF LEVEL setting. (Paragraph 3-71)

(24) LOG 10 dB Button: (push to set; push LIN or LOG 1 dB to release) Selects Log 10 dB amplitude mode for absolute measurements in dBV or dBm/600 ohms or relative measurements in dB. Display sensitivity is 10 dB per division; display range is 80 dB. (Paragraph 3-66)

(25) LINEAR Button: (push to set; push LOG 1 dB or LOG 10 dB to release) Selects Linear amplitude mode for absolute measurements in rms volts or relative measurements in percent of full scale. (Paragraph 3-51)

(26) POWER Switch: Applies line voltage to instrument when set to ON (AC) position; applies battery power to Option 001 instruments when set to ON (BAT) position; applies line voltage to Option 001 instruments to recharge batteries when set to CHARGE position. (Paragraph 3-192)

(27) POWER Light: Lights when POWER switch is set to ON (AC), ON (BAT) or CHARGE.

(28) STORE Button: (push to set; push to release) When initially pressed, trace currently being displayed is permanently stored in memory. When released, permanently stored trace is cleared from memory. (Paragraph 3-160)

(29) BLANK STORE Button: (push to set; push to release) When pressed, permanently stored trace is blanked from the display. When released, stored trace returns to display. (Paragraph 3-160)

(30) CLEAR WRITE Button: (momentary pushbutton) Clears display and resets sweep.

(31) FOCUS Control: Focuses CRT trace. (Paragraph 3-158)

(32) ADAPTIVE SWEEP Control: Turns Adaptive Sweep on or off; is used to set baseline threshold on CRT display. (Paragraph 3-147)

(33) INTENSITY Control: Adjusts brightness of CRT trace. Intensity can be set to any level without danger of burning the CRT face. (Paragraph 3-158)

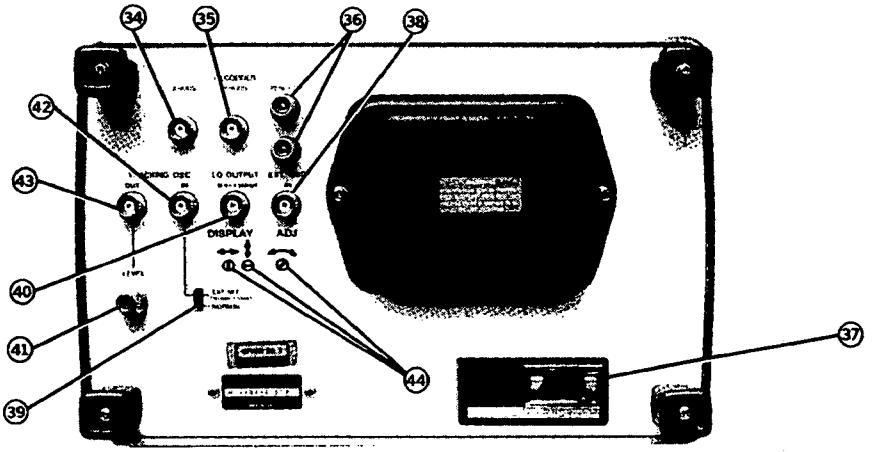


(34) X-AXIS Output: Female BNC connector supplies dc voltage corresponding to position of frequency sweep on CRT. Output voltage ranges from 0 V (left-hand edge) to + 5 V (right-hand edge). Output resistance is 1 kilohm, nominal. (Paragraph 3-165)

Y-AXIS Output: Female BNC connector supplies dc voltage proportional to amplitude. Output voltage ranges from 0 V (bottom of screen) to + 5 V (top of screen). Output resistance is 1 kilohm, nominal. (Paragraph 3-168)

(38) PEN LIFT Output: A closure is present across these terminals during single sweeps. If Adaptive Sweep is used, the closure is present only when the instrument is sweeping slowly over a response. (Paragraph 3-170)

(37) Power Input Module: Accepts power cord supplied with instrument. Contains line fuse and PC board for selecting line voltage. (Paragraph 3-193)

(36) EXT TRG IN Connector: Female BNC connector accepts contact closure or TTL logic levels to remotely trigger the frequency sweep. (Paragraph 3-143)

(39) EXT REF/NORMAL Switch: In the NORMAL position, the tracking oscillator receives its reference from an internal 100 kHz crystal oscillator. In the EXT REF position, the tracking oscillator reference is an external signal applied to the TRACKING OSC IN connector. With the switch in the EXT REF position, the tracking oscillator will be inoperative unless an external reference signal is applied. (Paragraph 3-176)

(40) L.O. OUTPUT: Female BNC connector supplies a 100 mV rms signal whose frequency varies from 1 MHz to 1.5 MHz as the analyzer frequency is tuned from 0 Hz to 50 kHz. Output impedance is approximately 1 kilohm. (Paragraph 3-178)

(41) LEVEL Control: Sets the amplitude of the Tracking Oscillator Output signal (0 V to 2 V rms)

(42) TRACKING OSC IN: Female BNC connector. An external reference signal can be applied to this connector to offset or frequency-modulate the Tracking Oscillator Output signal. (Paragraph 3-175)

(43) TRACKING OSC OUT: Female BNC connector supplies 0 Hz to 50 kHz signal that tracks the tuned or swept frequency of the instrument. Output level can be adjusted from 0 V to 2 V rms using the rear panel LEVEL control Output impedance is 600 ohms, nominal. (Paragraph 3-171)

(44) DISPLAY ADJUSTMENTS: Positions the vertical, horizontal, and rotational axis of the display. These controls can be adjusted with an alignment tool to allow precise alignment of the display. Δ21

**Figure 3-2. Rear Panel.**

### 3-13. Input Impedance.

3-14. The input impedance of the 3580A is 1 megohm shunted by 30 pF (28 pF nominal). This high input impedance has a minimum loading effect on the input signal and further permits the use of a 10 megohm, 10 pF Voltage Divider Probe (-hp- 10004B).

3-15. Figure 3-3 shows the equivalent circuit for the 3580A Input. The resistor, $R_{in}$, represents the 1 megohm input resistance and the capacitor, $C_s$, represents the 28 pF shunt capacitance. Figure 3-4 shows the input impedance, $Z_t$, as a function of frequency. At low frequencies the reactance of $C_s$ is very high, making $Z_t$, nearly equal to $R_{in}$. As frequency increases, the decreasing reactance of $C_s$ becomes more and more significant, causing $Z_t$ to decrease. At 50 kHz, $Z_t$ is approximately 100 kilohms.

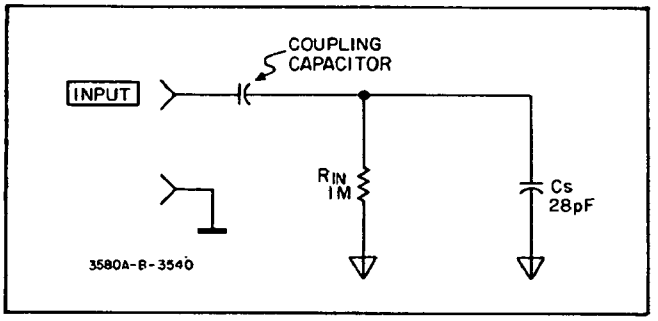


**Figure 3-3. Equivalent Input Circuit.**

### 3-16. Input Constraints.

3-17. The maximum ac voltage that can be safely applied to the 3580A INPUT is determined by the INPUT SENSITIVITY switch setting (Paragraph 3-39). Maximum input levels are listed in Table 3-2. The 3580A input circuits are well protected and can withstand momentary (< 5 second) overloads up to 100 V rms on all input ranges. The instrument can withstand continuous overloads up to 100 V rms on the + 30 dB through -10 dB ranges and overloads up to 50 V rms on the -20 dB through -70 dB ranges. Overloads greater than this may damage the instrument.

CAUTION

*3580A STD Input Levels exceeding 100V rms on the + 30 dB through -10 dB ranges, 50 V rms on the -20 dB through -70 dB ranges or ± 100 V dc may damage the instrument. See Paragraph 3-187 for Option 002.*

**3-18. DC Isolation.** The STD 3580A INPUT is capacitively coupled to provide dc isolation. The maximum dc voltage that can be safely applied to the INPUT is ± 100 V dc. Exceeding this limit can cause breakdown of the input capacitor resulting in damage to the input amplifier circuitry.

3-19. The 3580A cannot be operated in a floating condition. All input and output commons are connected directly to outer-chassis (frame) ground which connects to earth ground through the offset pin of the power cord connector or the common side of the INPUT connector. The 3580A Option 992, when operated in the unbalanced mode, has the same input restrictions as the 3580A standard. However, when the 3580A Option 002 is used in the bridged mode or the terminated mode, there is no input connection to chassis ground.

### 3-20. Grounding.

3-21. To protect operating personnel, *the 3580A chassis must be grounded.* The 3580A is equipped with a three conductor power cable which, when plugged into an appropriate receptacle, grounds the instrument. The offset pin on the power plug is the ground connection.

3-22. To preserve the protection feature when operating the instrument from a two contact outlet, use a three-prong to two-prong adapter and connect the lead on the adapter to earth ground.

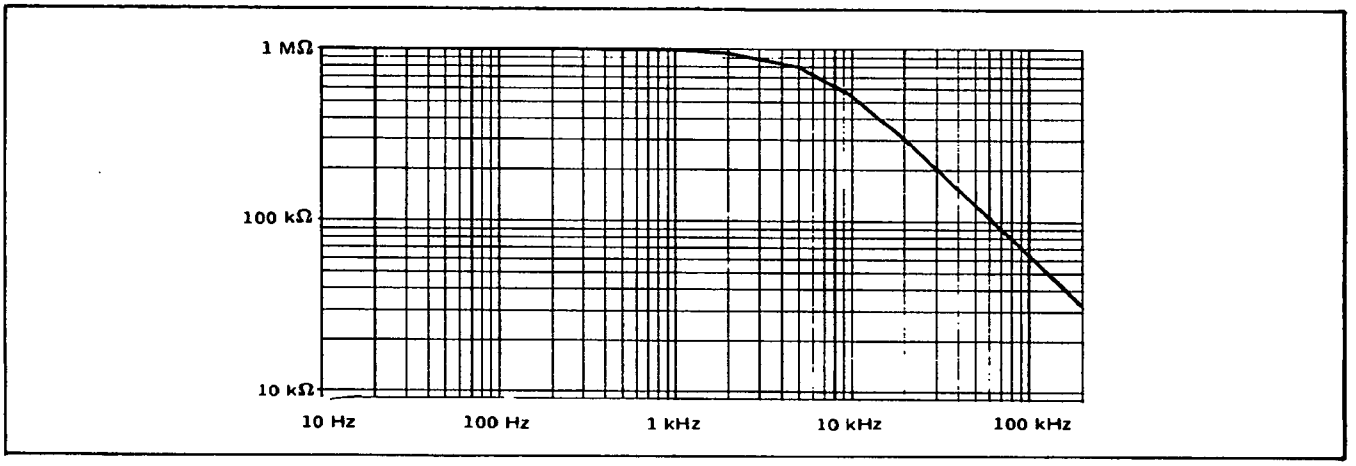


**Figure 3-4. Graph $Z_t$ vs. Frequency.**

f. Adjust the front panel amplitude VERNIER so that the horizontal trace is between 0 dB and -10 dB on the display.

g. Set the AMPLITUDE MODE to LOG 1 dB/DIV.

h. Adjust the probe so that its response is flat over the entire frequency range (Figure 3-35).

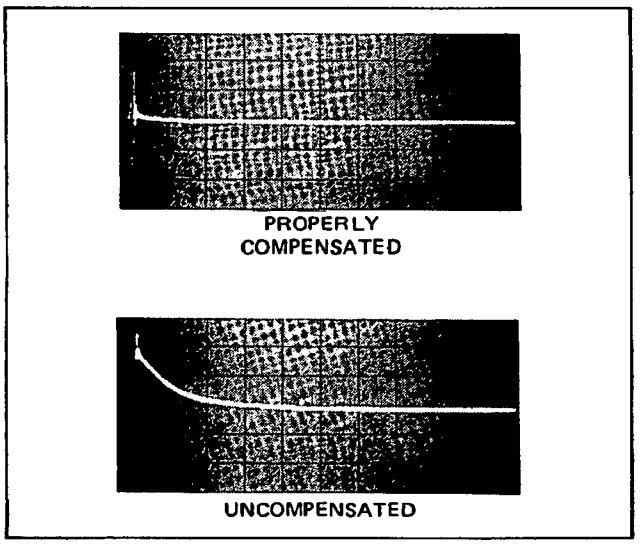


**Figure 3-35. Probe Compensation.**

### 3-205. Familiarization Exercise.

3-206. The following procedure demonstrates the Digital Storage, Adaptive Sweep and other operating features of the 3580A.

a. Turn the instrument on as outlined in Paragraph 3-92. Perform the Amplitude Calibration Procedure (Paragraph 3-199). Perform the amplitude calibration using the 100 Hz BANDWIDTH and the LOG 10 dB AMPLITUDE MODE.

b. Set the 3580A controls as follows:

| | |
|---|---|
| ADAPTIVE SWEEP | OFF |
| DISPLAY | STORE and BLANK STORE Released |
| AMPLITUDE MODE | LOG 10 dB/DIV |
| AMPLITUDE REF LEVEL | NORMAL |
| dBV/LIN - dBm Switch | dBV/LIN |
| INPUT SENSITIVITY | CAL |
| VERNIER | CAL (Fully CW) |
| FREQUENCY | 00000 Hz |
| START CTR | START |
| BANDWIDTH | 100 Hz |
| DISPLAY SMOOTHING | MIN |
| FREQ. SPAN/DIV | 5 KHz |
| SWEEP TIME/DIV | 1 SEC |
| SWEEP MODE | REP |

c. The spectral components of the 10 kHz calibration signal will now appear on the display. If the instrument is properly calibrated, the peak of the 10 kHz fundamental frequency component will be at full scale and the zero response will coincide with the first line on the left-hand side of the display graticule.

d. Set the BANDWIDTH switch to the 30 Hz position. The ADJUST light will illuminate to indicate that the sweep rate is too fast. As the trace is updated by a new sweep, the amplitudes of the various frequency components will be compressed because the IF Filter does not have time to fully respond.

e. Rotate the SWEEP TIME control counterclockwise until the ADJUST light goes out (10 SEC). When the ADJUST light goes out, the instrument is sweeping at the optimum rate.

f. Set the SWEEP MODE switch to the SING (Single) position. Press and release the CLEAR WRITE button. This will clear the display and initiate a new sweep. Allow 100 seconds for the display to be updated. The trace generated by the single sweep will continue to be displayed until it is cleared or replaced by a new sweep.

g. Press the STORE button and then press the BLANK STORE button. The trace currently being displayed is now permanently stored in memory and can be recalled at any time by releasing the BLANK STORE button.

h. Using the ADAPTIVE SWEEP control, set the baseline threshold about 10 dB above the noise floor.

i. Press and release the CLEAR WRITE button to initiate a new sweep. Observe the fast and slow excursions of the Adaptive Sweep. Note that the pen lift relay clicks each time the instrument begins to sweep slowly over a response. The Adaptive Sweep takes only about 15 seconds to trace the plot that previously took 100 seconds.

j. Set the ADAPTIVE SWEEP control to the OFF position. Release the BLANK STORE button to compare the 15 second trace and the 100 second trace. The two traces will be identical except the 15 second trace obtained using the Adaptive Sweep will not have a noise floor. Again press the BLANK STORE button. The permanently stored trace will disappear.

k. Set the SWEEP MODE switch to the REP (Repetitive) position.

l. To examine the 20 kHz frequency component in greater detail, set the START/CTR switch to CTR, set the FREQ SPAN/DIV to 0.5 KHz and set the SWEEP TIME/DIV to 1 SEC. At this point, the center of the display is 0 Hz and the negative frequencies on the left-hand side of 0 Hz are blanked. Set the FREQUENCY

display to 20000 Hz. When the trace is updated by a new sweep, the 20 kHz frequency component will appear in the center of the display.

m. Set the BANDWIDTH switch to 300 Hz. This will make the 20 kHz component wider because the analyzer's response to a CW signal is an amplitude vs. frequency plot of the IF Filter.

n. Release the BLANK STORE button. The permanently stored trace will reappear on the display. Even though the sweep parameters have been changed, the stored trace appears exactly as it did when the STORE button was initially pressed.

o. Set the FREQ SPAN/DIV to 5 KHz and allow 10 seconds for the display to be updated.

p. Release the STORE button. The previously stored trace will disappear and a series of dots will appear on the current trace. The dots will be cleared when the display is updated by a new sweep.

### 3-207. Technique For Measuring Noise.

3-208. The 3580A uses peak detection on the sweep spectrum. Therefore, the noise displayed is peak noise and can be several dB higher than average noise. Average noise measurements can be made if the following technique is used:

a. Use display smoothing.

b. Ignoring the adjust warning light, decrease Sweep Time/Div until the display noise level no longer decreases. The spectrum shape of the noise should be gradually changing, not abruptly, allowing the spectrum analyzer to follow it well.

**3-209. Average Detection Error.** The video detector is an average responding full wave detector. This type of detector has an inherent error when detecting noise. In the 3580A, the error occurs in both the linear and log modes of operation. To correct for this error, multiply the displayed reading by 1.128 to get the rms value.

**3-210. Log Conversion Error.** In the Log mode of operation, an additional correction must be made to compensate for log conversion error. Add 1.5 dB to the corrected display reading.

NOTES

*1. Only "Gently" varying noise spectra can be accurately measured using this technique. Accurate measurement of both discrete lines and noise levels in the same spectrum is generally not possible.*

*2. To calculate the equivalent noise bandwidth, multiply the 3 dB bandwidth by 1.12. Remember that the 3 dB bandwidth has a tolerance of ± 15% and therefore should be measured if accurate results are desired.*

*3. The recorder Y Axis output is linear and continuous. Noise measurements can be made by connecting a true rms reading voltmeter to this output. See Paragraph 3-168 for operating information concerning the Y Axis output. The use of an X-Y recorder may also prove beneficial in making noise measurements.*

### 3-211. Rear Panel Display Adjustment Controls. Δ21

Instruments with serial prefix 2030A06030 or greater have these controls which allow for the precise adjustment of the horizonal, vertical, and rotational axis of the display. If the display is misaligned use the following procedure to correct.

a. Set the 3580A controls as follows:

ADAPTIVE SWEEP .....OFF
DISPLAY .....All Pushbuttons Released
Amplitude MODE .....Log 1 dB/DIV
Amplitude REF LEVEL .....NORMAL
INPUT SENSITIVITY .....CAL
VERNIER .....CAL (Fully CW)
FREQUENCY.....00000 Hz
START-CTR .....START
RESOLUTION BANDWIDTH .....300 Hz
DISPLAY SMOOTHING.....MIN
FREQ. SPAN/DIV.....5 KHz
SWEEP TIME/DIV .....0.1 SEC
SWEEP MODE .....REP

Use an alignment tool inserted through the DISPLAY ADJUST access holes in the rear panel to make the following adjustments:

b. Adjust the rotation control so the display baseline is parallel to the bottom of the graticule line.

c. Adjust the vertical position control so the display falls on the bottom graticule line.

d. Adjust the horizontal position control so the CAL signal peaks fall on the third , fifth, and seventh vertical graticule lines.

e. Repeat b. through d. until the display is properly adjusted.

# SECTION V
# MAINTENANCE

## 5-1. INTRODUCTION.

5-2. This section contains Performance Tests (Paragraph 5-5) and Adjustment Procedures (Paragraph 5-48) for the Model 3580A Specturm Analyzer. Troubleshooting information is presented in Section VII, along with the Schematic Diagrams.

## 5-3. RECOMMENDED TEST EQUIPMENT.

5-4. The test equipment that is recommended for maintaining the Model 3580A is listed in Table 5-1. The equipment is designated as to its use for Performance Tests, Adjustments or Troubleshooting.

## 5-5. PERFORMANCE TESTS.

5-6. The following Performance Tests are procedures that can be used to verify that the 3580A is operating properly and meets the spectifications listed in Table 1-1. These procedures can be used for incoming quality control inspection, to check specifications after a repair or for routine maintenance. Where possible, the Performance Tests call out the proper adjustment in the Adjustment Procedures. Since adjustments interact, it is important to follow the procedures carefully.

a. FREQUENCY TESTS (Paragraph 5-9).

b. SWEEP TESTS (Paragraph 5-13).

c. AMPLITUDE TESTS (Paragraph 5-18).

d. BANDWIDTH TESTS (Paragraph 5-28).

e. DYNAMIC RANGE TESTS (NOISE TESTS) (Paragraph 5-30).

f. IF FEEDTHRU and ZERO BEAT RESPONSE TSTS (Paragraph 5-36).

g. INPUT IMPEDANCE TESTS (Paragraph 5-38).

h. OUTPUT TESTS (Paragraph 5-40).

i. BALANCED INPUT TESTS (Option 002 only) (Paragraph 5-44).

## 5-7. Test Card.

5-8. A Performance Test Card is provided at the end of this section for your convenience in recording the performance of the Model 3580A during Performance Tests. This card can be removed from the manual and used as a permanent record of the incoming inspection or of a routine performance test. The Performance Test Card may be reproduced without written permission from Hewlett-Packard.

NOTE

*Always allow one hour continuous warm-up before attempting any tests.*

## 5-9. Frequency Tests. Δ16

5-10. These tests verify part of the Frequency Characteristic Specifications listed in Table 1-1. If, for any reason, the instrument will not pass these tests, perform the Sweep Alignment (Paragraph 5-63) of the Adjustment Procedures.

### 5-11. Range and Frequency Display Accuracy Test.

a. Position the following front panel controls:

ADAPTIVE SWEEP.....OFF
DISPLAY.....All pushbuttons released
AMPLITUDE MODE...LOG 10 dBv/DIV
AMPLITUDE REF LEVEL....NORMAL
dBv/LIN - dBm 600 Ω.....dBv/LIN
INPUT SENSITIVITY.....CAL
VERNIER (Amplitude).....CAL (Fully CW)
FREQUENCY.....30000 Hz
START-CTR.....CTR
RESOLUTION BANDWIDTH.....1 Hz
DISPLAY SMOOTHING.....MIN
FREQ. SPAN/DIV.....5 Hz
SWEEP TIME/DIV..... .2 SEC
SWEEP MODE.....MAN

Option 002: Set dBm 900 Ω/LIN-dBm 600 Ω switch to dBm 900 Ω; set INPUT MODE switch to UNBAL.

b. By alternately pressing and releasing DISPLAY-CLEAR WRITE while adjusting the MANUAL VERNIER, center the display indication.

c. With the display indication now on the center graticule, vary the FINE FREQUENCY control to peak the display indication.

d. The FREQUENCY display should read 30000 Hz ± 3 Hz.

e. Change the RESOLUTION BANDWIDTH to 3 Hz. Repeat Steps c and d.

## Table 5-1. Recommended Test Equipment.

| INSTRUMENT | REQUIRED CHARACTERISTICS | USAGE: Performance Checks | USAGE: Adjustments | USAGE: Troubleshooting | RECOMMENDED MODEL |
|---|---|---|---|---|---|
| Digital Multimeter | DC Function:<br>Full scale ranges: 1V, 10V, 100V<br>Resolution: 4 digits<br>Input Impedance: 10-12 MΩ<br>Accuracy: ± .1% of reading<br>AC Function:<br>Response: average<br>Frequency Range: 45Hz-100kHz<br>Full Scale Range: 1V, 10V, 100V<br>Resolution: 4 digits<br>Input Impedance: ≥ 10 MΩ, ≤ 100 pF<br>Accuracy: ± 1% of reading | X | X | X | -hp- 34740/34702<br>or<br>-hp- 3455A |
| Oscilloscope | Sensitivity: .005 V/DIV<br>Sweep: .005 μsec/DIV to .1 sec/div<br>Frequency: 0 to 10 MHz<br>Input Impedance: 1MΩ, 25 pF<br>Dual Trace (troubleshooting only) | | X | X | -hp- 1740B<br>or<br>-hp- 180C/D with<br>-hp- 1801A Vertical Amplifier and<br>1820C Time Base |
| Voltage Dividers for Oscilloscope (2) | Division Ratio 10:1<br>Impedance: 10 MΩ, 10 pF | | X | X | -hp- 10004B<br>or<br>-hp- 10004D |
| Electronic Counter | Function: Frequency and Time Interval<br>Frequency Range: 10 Hz to 10 MHz<br>Resolution: 6 digits<br>Sensitivity: 0.1 V rms | | X | X | -hp- 5328A<br>or<br>-hp- 5328B |
| Frequency Synthesizer (50 ohms) | Frequency Range: 10 Hz to 1.5 MHz<br>Amplitude Range:<br>(−67.99 dBm 50 Ω to + 26.99 dBm 50 Ω)<br>Amplitude Accuracy: ± .1 dB<br>Amplitude Resolution: .01 dB<br>Frequency Resolution: .1 Hz | X | X | X | -hp- 3320B<br>or<br>-hp- 3325A |
| 50 Ohm Termination for Syntheseizer | 1 watt<br>50 ohms ± .1 Ω | X | X | X | -hp- 11048C |
| Distortion Analyzer | Fundamental Frequency Range:<br>10 Hz to 100 kHz<br>Distortion Measurement Accuracy:<br>± 10% for greater than .3% distortion | X | | | -hp- 333A<br>or<br>-hp- 334A |
| Bandpass Filter* | Center of Bandpass at 5kHz, (50 Ω input)<br>Output Distortion:<br>(with Frequency Synthesizer): > 90dB down | X | | | Allen Avionics (special order)<br>or<br>White Model 2640 |
| 1 kΩ Resistor | 1% film resistor | X | | | -hp- 0757-0280 |
| (2) 453 Ω resistors | 1% film resistor | X | | | -hp- 0698-3510 |
| 600 Ω Termination | | X | | | 11095A |
| 10 kΩ Resistor | 10% carbon or film resistor | | | X | -hp- 0757-0442 |
| 550 Ω Resistor | 10% carbon or film resistor | X | | | -hp- 0698-4456 |
| 1 MΩ Resistor | 1% film resistor | X | | | -hp- 0757-0344 |
| Logic Clip | Able to detect TTL HIGH and LOW levels for DUAL IN-LINE configuration, 16 pins | | | X | -hp- 10528A |

* Optional see Δ 19

e. Reposition the following front panel controls:

AMPLITUDE MODE.....LOG 1 dB/DIV

f. Readjust the FINE FREQUENCY control for a peak display indication of the 10 kHz input. Adjust CAL 10 kHz for a full scale 0 dB display, if not already so adjusted.

g. Slowly rotate MANUAL VERNIER CW until the display dot has dropped 3 dB in amplitude. (Remember, the display is calibrated 1 dB/DIV). This is the upper 3 dB point of the filter.

h. Read and record the frequency in the FREQUENCY DISPLAY. Rotate the MANUAL VERNIER CCW until the display dot has reached the lower 3 dB point of the filter.

i. Subtract the frequency now in the FREQUENCY DISPLAY from the previously recorded frequency. The result should be 300 Hz ± 45 Hz.

j. Repeat Steps f through i for the 100 Hz, 30 Hz and 10 Hz filters. See Table 5-11 for the start frequency of the source, FREQUENCY setting, RESOLUTION BANDWIDTH, FREQ. SPAN/DIV, and the test limits. At the start of each new bandwidth setting, always center the display with MANUAL VERNIER, and adjust the FREQUENCY controls, and CAL 10 kHz for a full scale, peak display at the appropriate start frequency. Then make the appropriate adjustments for the upper and lower 3 dB points.

**Table 5-11. 300 Hz thru 10 Hz Bandwidth Tests.**

| SOURCE START FREQ. and 3580A FREQUENCY | RESOLUTION BANDWIDTH | FREQ. SPAN/DIV | 3 dB BANDPASS TEST LIMITS |
|---|---|---|---|
| 10 kHz | 300 Hz | 50 Hz | 300 Hz ± 45 Hz |
| 1 kHz | 100 Hz | 50 Hz | 100 Hz ± 15 Hz |
| 1 kHz | 30 Hz | 10 Hz | 30 Hz ± 4.5 Hz |
| 1 kHz | 10 Hz | 5 Hz | 10 Hz ± 1.5 Hz |

k. Using Table 5-12 and the same technique used for the 300 Hz, 100 Hz, 30 Hz, and 10 Hz Bandwidths, test the 60 dB Bandpass of the 3 Hz and 1 Hz filters. However, use AMPLITUDE MODE.....LOG 10 dB/DIV and measure the frequency difference between the 60 dB points. As before, always adjust the FINE FREQUENCY control and CAL 10 kHz for a peaked full scale display before attempting to measure the 60 dB bandwidths. If the display is noisy at the 60 dB points, use DISPLAY SMOOTHING.....MAX. Note: The display is now calibrated 10 dB/DIV.

**Table 5-12. 3 Hz and 1 Hz Bandwidth Tests.**

| SOURCE START FREQ. and 3580A FREQUENCY | RESOLUTION BANDWIDTH | FREQ. SPAN/DIV | 60 dB BANDPASS TEST LIMITS |
|---|---|---|---|
| 1 kHz | 3 Hz | 5 Hz | 30 Hz ± 4.5 Hz |
| 1 kHz | 1 Hz | 5 Hz | 10 Hz ± 1.5 Hz |

## 5-30. Dynamic Range Tests (Noise Tests). Δ16

5-31. Dynamic range is the ability of the instrument to detect large and small signals and display them simultaneously. The range and accuracy of the amplifiers is a determing factor. This specification was tested in the Amplitude Tests (Paragraph 5-18). The instrument noise and spurious responses are the other determining factors of dynamic range. These tests verify these parameters. If the instrument will not pass any of these tests, see Section VII for troubleshooting information. There are no adjustments for these specifications.

Equipment Required:

Frequency Synthesizer (-hp- Model 3320B, 50 ohms)
50 Ohm Termination (-hp- 11048C)
Bandpass Filter (White Model 2640)
Proper input resistor for filter (550 Ω ± 10%, Part No. 0698-4456)
1% 1 kΩ film resistor (-hp- Part No. 0757-0280)

## 5-32. Noise Level Tests.

a. Connect the 1 kΩ resistor across the INPUT terminals of the 3580A. Disconnect all signal sources.

b. Position the following front panel controls: (Only those controls printed in **BOLD** require a change from the previous tests).

ADAPTIVE SWEEP.....OFF
DISPLAY.....All pushbuttons released
AMPLITUDE MODE..LOG 10 dBV/DIV
AMPLITUDE REF LEVEL....NORMAL
dBV/LIN – dBm 600Ω.....dBV/LIN
**INPUT SENSITIVITY.....– 70 dB**
VERNIER (Amplitude).....CAL (Fully CW)
**START – CTR.....START**
**RESOLUTION BANDWIDTH.....300 Hz**
**DISPLAY SMOOTHING.....MAX**
**FREQ. SPAN/DIV.....5 kHz**
**SWEEP TIME/DIV.....5 SEC**
**SWEEP MODE.....RESET**
**FREQUENCY.....00000 Hz**
next
**SWEEP MODE.....MANUAL**
Option 002: Set dBm 900 Ω/LIN – dBm 600 Ω switch to dBm 900 Ω; set INPUT MODE switch to UNBAL; turn the TRACKING OSC LEVEL fully CCW.

c. Adjust the MANUAL VERNIER full CCW. Adjust the FINE FREQUENCY control for a peak display.

d. Adjust the MANUAL VERNIER for a display indiction at 10 kHz (2 major divisions from left graticule). Momentarily press the following control:

DISPLAY.....CLEAR WRITE

e. The display indication should always be less than – 130 dB (6 major divisions down from top graticule, since Full Scale = – 70 dB).

f. Reposition the following front panel control:

RESOLUTION BANDWIDTH.....30 Hz

g. Momentarily press the following control:

DISPLAY.....CLEAR WRITE

The display indication should be less than −140 dB (7 major divisions down from top graticule).

h. Reposition the following control:

FREQ. SPAN/DIV.....0.1 kHz

i. Adjust MANUAL VERNIER full CCW. Adjust the FINE FREQUENCY control for a peak display indication.

j. Adjust MANUAL VERNIER for a display indication at 100 Hz (1 major division from leftmost graticule). Momentarily press the following control:

DISPLAY.....CLEAR WRITE

k. The display indication should be less than −132 dB (6.2 major divisions down from top graticule).

l. Adjust MANUAL VERNIER for a display indication of 1 kHz (far right graticule). Momentarily press the following control:

DISPLAY.....CLEAR WRITE

m. The display indication should be less than −140 dB (7 major divisions down from top graticule).

n. Reposition the following control:

RESOLUTION BANDWIDTH.....1 Hz

Momentarily press the following control:

DISPLAY.....CLEAR WRITE

o. The display indication should be less than −150 dB (8 major divisions down from top graticule).

p. Readjust MANUAL VERNIER for a display indication at 100 Hz (1 major division from leftmost graticule). Momentarily press the following control:

DISPLAY.....CLEAR WRITE

q. The indication should be less than −143 dB (7.3 major divisions down from top graticule).

r. Reposition the following controls:

DISPLAY SMOOTHING.....MIN
FREQ. SPAN/DIV.....5 Hz

s. Adjust MANUAL VERNIER FULL CCW. Momentarily press the following front panel control:

DISPLAY.....CLEAR WRITE

t. Adjust FINE FREQUENCY control for a peak response at the leftmost graticule. Reposition the following front panel control:

DISPLAY SMOOTHING.....MAX

u. Adjust the MANUAL VERNIER for a display indication at 10 Hz (2 major divisions from leftmost graticule). Momentarily press the following control:

DISPLAY.....CLEAR WRITE

v. The display indication should be less than −135 dB (6.5 major divisions down from top graticule). Remove the 1 kΩ resistor from the input terminals.

**5-33. Noise Sideband Test.**

a. Reposition the following controls:

SWEEP MODE.....RESET
INPUT SENSITIVITY.....CAL
FREQUENCY.....10000 Hz
START-CTR.....CTR
DISPLAY SMOOTHING.....MIN
FREQ. SPAN/DIV.....5 Hz
SWEEP TIME/DIV.....10 SEC
SWEEP MODE.....MAN

b. By alternately pressing and releasing DISPLAY-CLEAR WRITE while adjusting MANUAL VERNIER, center the display indication (a narrow spike).

c. Adjust the FINE FREQUENCY control for a peak display of this spike.

d. Reposition the following controls:

SWEEP MODE.....SING

e. After waiting for the sweep to be completed (100 sec.), verify that the noise on the display ± 10 Hz (± 2 major divisions) away from the 10 kHz CAL signal (in center of display) is at least 70 dB below the CAL signal.

**5-34. Spurious Response Test. Δ 19**

NOTE: Not required for instruments having serial number > = 2030A05376 or older units which have been updated.

a. Reposition the following controls:

INPUT SENSITIVITY.....−20 dB
START-CTR.....START
RESOLUTION BANDWIDTH.....30 Hz
FREQ. SPAN/DIV.....2 kHz
SWEEP TIME/DIV.....5 SEC
SWEEP MODE.....RESET
FREQUENCY.....00000 Hz

b. Momentarily press:

DISPLAY.....CLEAR WRITE

c. Reposition the following controls:

SWEEP MODE.....MANUAL

and momentarily press:

DISPLAY.....CLEAR WRITE

d. Connect the frequency synthesizer (use proper output impedance needed for the bandpass filter) to the input of the bandpass filter. Adjust the filter for a 5 kHz center frequency and adjust the synthesizer for a 5 kHz output. (For a 50 ohm source and the White 2640 filter, connect a 550 Ω resistor (± 10%) in series between the filter and synthesizer. This gives the 600 Ω source impedance required by the White filter (See Figure 5-3).

e. Connect the output of the filter to the input of the 3580A. Always terminate properly if required. (The White Model 2640 filter requires no output termination. See Figure 5-3).

f. Adjust MANUAL VERNIER for a display indication at 5 kHz (2½ major divisions from left graticule). Adjust the source level for a −20 dBV (full scale) input to the 3580A (For the White 2640 filter and a 50Ω source, this corresponds to −16.99 dBm 50 Ω level on the source). Readjust MANUAL VERNIER for a peak display. Adjust CAL 10 kHz for a full scale display.

g. Reposition the following controls:

SWEEP MODE.....SING

h. After waiting for one complete sweep (50 sec.) verify that all responses other than the zero response are at least 80 dB below the 5 kHz response.

**5-35. Line Related Spurious Test.**

Specification:

>80dB below input reference level or
-135 dBV (0.18 μ V).

a. Disconnect the Synthesizer and Bandpass Filter from the 3580A Input. Turn off all unnecessary equipment located near the 3580A. This especially includes large current users such as soldering irons, blowers, motors,etc.

b. Using a short piece of wire, connect a short across the 3580A INPUT terminals.

c. Reposition the following controls:

INPUT SENSITIVITY.....−70 dB
RESOLUTION BANDWIDTH.....3 Hz
FREQ. SPAN/DIV.....5 Hz
SWEEP MODE.....MAN
MANUAL VERNIER.....centered
DISPLAY SMOOTHING.....MAX
START-CTR.....CTR

**NOTE**

*If the power-line frequency is 50 Hz, substitute the following 3580A frequencies for Steps d and f.*

*Step d: 50 Hz*
*Step f: 100 Hz*
*Step f: 150 Hz*

d. With the FINE FREQUENCY control, tune the 3580A frequency to 60 Hz.

e. Press CLEAR WRITE, then slowly turn the MANUAL VERNIER to obtain a peak reading. The peak should be more than 65 dB below full scale (-135 dB).

f. Repeat Steps d and e substituting 120 Hz, and 180 Hz for the 3580A frequencies.

**NOTE**

*If the instrument fails this test double check that the input short is as small as possible, that all power line current is kept at a minimum, and that all covers are tightly secured on the 3580A*

**5-36. IF Feedthru and Zero Beat Response Tests. Δ16**

5-37. These tests verify the ability of the instrument to reject a 100 kHz signal at the input and also how well the Zero Beat Response is suppressed. Proceed to the

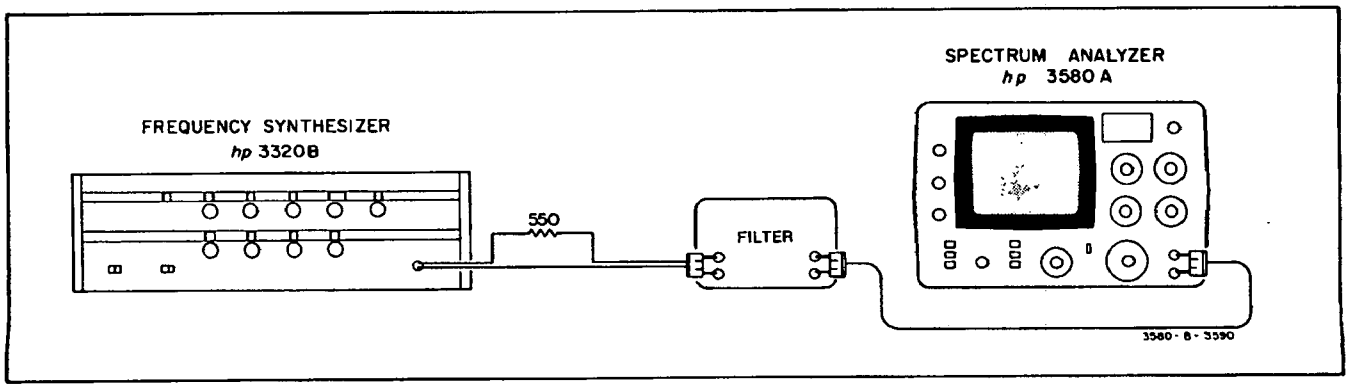


**Figure 5-3. Spurious Response Test.**

Mixer Balance Adjustments (Paragraph 5-81) of the Adjustment Procedures if the Zero Beat Response is too large. Proceed to Section VII for troubleshooting information if there is too much IF Feedthru.

Equipment Required:

Frequency Synthesizer (-hp- Model 3320B, 50 ohm)

a. Reconnect the synthesizer to the 3580A. Do not terminate. Adjust the source for a 10 volt 100 kHz output (+ 26.99 dBm 50 ohms setting on 3320B and unterminated).

b. Position the following front panel controls: (Only those controls printed in **BOLD** require a change from the previous test).

**SWEEP MODE** ..... **RESET**
ADAPTIVE SWEEP..... OFF
DISPLAY..... All pushbuttons released
AMPLITUDE MODE..LOG 10 dBV/DIV
AMPLITUDE REF LEVEL....NORMAL
dBV/LIN-dBm 600 Ω.....dBV/LIN
**INPUT SENSITIVITY**..... **+20 dB**
VERNIER (Amplitude)..... CAL

START-CTR ..... START
RESOLUTION BANDWIDTH..... 3 Hz
**DISPLAY SMOOTHING**..... **MIN**
**FREQ. SPAN/DIV**..... **20 Hz**
SWEEP TIME/DIV..... 5 SEC
FREQUENCY..... 00000 Hz
next
**SWEEP MODE** ..... **MANUAL**
Option 002: Set dBm 900 Ω/Lin-dBm 600 Ω switch to dBm 900 Ω; set INPUT MODE switch to UNBAL.

c. Adjust MANUAL VERNIER for a response in the center of the screen. The display indication should be at least 70 dB below full scale to verify the IF Feedthru specification of Table 1-1. If the instrument fails this test, see Section VII for troubleshooting information.

d. Disconnect the synthesizer. Reposition the following front panel controls:

RESOLUTION BANDWIDTH..... 300 Hz
FREQ. SPAN/DIV..... 5 kHz
SWEEP MODE..... RESET

e. Momentarily press the following front panel control:

DISPLAY..... CLEAR WRITE

f. Adjust FINE FREQUENCY control for a maximum display indication on the left graticule. This display should be at least 30 dB (3 major divisions) below full scale to verify the Zero Beat Response specification of Table 1-1. If the instrument fails this test, go to the Mixer Balance Adjustments (Paragraph 5-81) of the Adjustment Procedures.

### 5-38. Input Impedance Tests. Δ16

5-39. These tests verify the Input Impedance characteristics of Table 1-2. Since there is no adjustment for this parameter, see Section VII for troubleshooting information if the instrument fails this test.

Equipment required:

1 MΩ ± 1% film resistor (-hp- Part No. 0757-0344)

a. Position the following front panel controls. (Only those controls printed in **BOLD** require a change from the previous tests.)

ADAPTIVE SWEEP..... OFF
DISPLAY..... All pushbuttons released
AMPLITUDE MODE...LOG 1 dBV/DIV
AMPLITUDE REF LEVEL....NORMAL
dBV/LIN-dBm 600 Ω.....dBV/LIN
**INPUT SENSITIVITY**..... **0 dB**
VERNIER (Amplitude)..... CAL

START-CTR ..... START
DISPLAY SMOOTHING..... MIN
**RESOLUTION BANDWIDTH**..... **10 Hz**
**FREQ. SPAN/DIV**..... **1 kHz**
SWEEP TIME/DIV..... 5 SEC
SWEEP MODE..... RESET
FREQUENCY..... 00000 Hz
next
**SWEEP MODE** ..... **MANUAL**
Option 002: Set dBm 900Ω/LIN-dBm 600Ω switch to dBm 900 Ω; set INPUT MODE switch to UNBAL.

b. Connect the rear panel TRACKING OSC OUT to the front INPUT terminals of the 3580A. Adjust the rear panel TRACKING OSC LEVEL control fully CW. Adjust MANUAL VERNIER for a 1 kHz display indication (1 major division from left graticule). Readjust the TRACKING OSC LEVEL control for a full scale 0 dB display. Momentarily press the following control:

DISPLAY..... CLEAR WRITE

c. Connect the 1 MΩ resistor in series between the TRACKING OSC OUT and front panel INPUT terminals. The display indication should drop 6 dB ± .3 dB (6 major divisions ± .3 major divisions) to verify an input impedance of 1 MΩ.

d. Reposition the following front panel control:

INPUT SENSITIVITY..... −10 dB

e. Readjust the rear panel TRACKING OSC LEVEL control for a full scale display. Adjust MANUAL VERNIER for a display indication at 10 kHz (far right display graticule). DO NOT REMOVE 1 MΩ RESISTOR. Momentarily press the following front panel control:

DISPLAY..... CLEAR WRITE

f. 1) Std. 3580A: The amplitude should drop 3 dB ± 1 dB, verifying that the input shunt capacitance is 30 pF, nominal.

2) Option 002: The amplitude should drop 4 dB ± 1 dB, verifying that the input shunt capacitance is 40 pF, nominal.

g. Disconnect the cable connected between the TRACKING OSC OUT and the front panel INPUT terminals.

### 5-40. Output Tests.

5-41. These tests verify the Output specifications of the 3580A listed in Table 1-1.

Equipment Required:

Digital Multimeter (-hp- Model 34740/34702)
Distortion Analyzer (-hp- Model 333A)

### 5-42. TRACKING OSC OUTPUT Tests.

a. Position the following front panel controls. (Only those controls printed in **BOLD** require a change from the previous tests).

ADAPTIVE SWEEP.....OFF
DISPLAY.....All pushbuttons released
**AMPLITUDE MODE..LOG 10 dBV/DIV**
AMPLITUDE REF LEVEL....NORMAL
dBV/LIN-dBm 600 Ω.....dBV/LIN
**INPUT SENSITIVITY.....+20 dB**
VERNIER (Amplitude).....CAL (Fully CW)
START-CTR ..... START
RESOLUTION BANDWIDTH.....10 Hz
DISPLAY SMOOTHING.....MIN
**FREQ. SPAN/DIV.....5 kHz**
SWEEP TIME/DIV.....5 SEC
**SWEEP MODE.....RESET**
FREQUENCY.....00000 Hz

Option 002: Set dBm 900 Ω/LIN-dBm 600 Ω switch to dBm 900 Ω; set INPUT MODE switch to UNBAL.

b. Connect the multimeter (AC mode 100 volt range) and a 600 Ω termination (11095A) to the rear panel TRACKING OSC OUT. Adjust the FREQUENCY dial for 50Hz (300 Hz for Option 002). Adjust the rear panel TRACKING OSC LEVEL control for a 1.00 volt reading on the multimeter.*

c. Adjust the FREQUENCY control to 50.0 kHz (20.0 kHz for Option 002 instruments). Verify that the multimeter reads 1.00 volt ± .06 volts.

d. Reposition the following front panel controls:

AMPLITUDE MODE.....LIN
INPUT SENSITIVITY.....2 V
FREQUENCY.....00000 Hz
RESOLUTION BANDWIDTH.....30 Hz
SWEEP MODE.....MANUAL

e. Connect the rear panel TRACKING OSC OUT to the front panel INPUT terminals. Momentarily press the following control:

DISPLAY.....CLEAR WRITE

f. By alternately pressing and releasing DISPLAY-CLEAR WRITE while adjusting MANUAL VERNIER, center the display indication (a narrow spike).

g. Adjust the rear panel TRACKING OSC LEVEL control for a full scale 2 V display. Reposition the following front panel control:

RESOLUTION BANDWIDTH.....3 Hz

h. The display indication should drop no lower than 1 V (5 major divisions) to verify the frequency accuracy of the tracking oscillator. If the tracking oscillator frequency is out of tolerance, remove the top cover and adjust A2C4 for a peak display indication.

i. Reposition the following front panel control:

FREQ. SPAN/DIV.....0.1 kHz

j. Adjust MANUAL VERNIER for a 1 kHz display indication (indication on far right display graticule). Momentarily press the following front panel control:

DISPLAY.....CLEAR WRITE

k. Connect the TRACKING OSC OUT to the INPUT of the distortion analyzer. Adjust the TRACKING OSC LEVEL control fully CW.

l. Reference the TRACKING OSC OUT to 0 dB on the distortion analyzer. (For the -hp- 333A Distortion Analyzer, position the following controls:

FUNCTION.....SET LEVEL
METER RANGE.....0 dB
FREQUENCY RANGE.....X100
FREQUENCY.....10 (1 kHz)
HIGH PASS FILTER.....OUT

Adjust the SENSITIVITY and VERNIER controls of the distortion analyzer for a 0 dB meter indication. Set the distortion analyzer FUNCTION switch to DISTORTION.)

m. Measure the distortion in dB by nulling the distortion analyzer.

n. Adjust the FREQUENCY and BALANCE controls for a meter null. Use automatic nulling if available.

*For measurements below 50 Hz, use a low frequency Digital Voltmeter such as the -hp- Model 3480/3484 with true rms.

o. The total distortion indication should be at least 40 dB below the reference level. If it is not, perform the Mixer Balance Adjustments (Paragraph 5-81). Disconnect the distortion analyzer from the 3580A.

**5-43. RECORDER Output Tests.**

a. Connect the multimeter (DC mode, 100 volt range) to the rear panel X-AXIS RECORDER output. Adjust MANUAL VERNIER fully CCW.

b. The multimeter should read 0 Vdc ± .15 V.

c. Adjust the MANUAL VERNIER fully CW. The multimeter reading should be 5 Vdc ± .15 V.

d. Reposition the following front panel control:

RESOLUTION BANDWIDTH.....30 Hz

e. Reconnect the TRACKING OSC OUTPUT to the INPUT terminals of the 3580A and readjust the rear panel LEVEL control for a full scale display (on the far right graticule). Use DISPLAY-CLEAR WRITE, if necessary, to clear all unwanted data from the display.

f. Connect the multimeter (DC mode, 100 volt range) to the rear panel Y-AXIS RECORDER output. The multimeter reading should be 5.00 Vdc ± .15 V.*

g. Disconnect the TRACKING OSC OUT from the INPUT terminals. The voltmeter should now read 0 volts dc ± .15 V. Disconnect the multimeter from the 3580A.*

**5-44. Balanced Input Tests (Option 002 only). Δ16**

5-45. These tests verify the Balanced Input specifications for the Option 002 instrument. If the instrument fails these tests, see Section VII for troubleshooting information since there are no adjustments for the parameters tested.

Equipment Required:

Frequency Synthesizer (-hp- Model 3320B, 50 ohm)
50 Ohm Termination (-hp- 11048C)
Two 453 ohm 1% resistors (-hp- Part No. 0698-3510)

**5-46. Common Mode Rejection Test.**

a. Position the following front panel controls:

ADAPTIVE SWEEP.....OFF
DISPLAY.....All pushbuttons released
**AMPLITUDE MODE..LOG 10 dBV/DIV**
AMPLITUDE REF LEVEL....NORMAL dBm 900Ω/
LIN-dBm 600 Ω.....dBm 900 Ω/LIN
**INPUT SENSITIVITY.....0 dB**
VERNIER (Amplitude).....CAL (Fully CW)
**INPUT MODE.....BRDG**
START-CTR.....START
**RESOLUTION BANDWIDTH.....3 Hz**
DISPLAY SMOOTHING.....MIN
**FREQ. SPAN/DIV.....10 Hz**
SWEEP TIME/DIV.....5 SEC
**SWEEP MODE.....RESET**
FREQUENCY.....00000 Hz
next
**SWEEP MODE.....MAN**

b. Adjust the frequency synthesizer for a 60 Hz, +5 dBm 900 Ω output (+ 17.55 dBm/50 ohms). Connect the synthesizer (properly terminated) to the INPUT of the 3580A.

c. Slowly adjust MANUAL VERNIER to the 60 Hz signal which will appear as a peak on the sixth major division from the left. Momentarily press the following front panel control:

DISPLAY.....CLEAR WRITE

d. Adjust the VERNIER (Amplitude) for a full scale 0 dB display.

e. Disconnect the synthesizer from the 3580A and connect two 453 ohm resistors in series between the INPUT terminals. (See Figure 5-4.)

f. Connect the synthesizer to the junction of the two resistors and to the chassis on the rear panel as shown in Figure 5-4. (Do not change the synthesizer amplitude setting.)

g. The display indication on the 3580A should be at least 70 dB below full scale (10 dB/DIV).

**5-47. Frequency Response Test.**

a. Disconnect the resistors from the 3580A INPUT terminals and reconnect the synthesizer (properly terminated in 50 ohms). Adjust the source for a 0 dBm 900 Ω (+12.55 dBm 50 Ω) 10 kHz signal.

b. Reposition the following front panel controls:

SWEEP MODE.....RESET
FREQUENCY.....10000 Hz
START-CTR.....CTR
VERNIER (Amplitude).....Fully CW
SWEEP MODE.....MAN

c. By alternately pressing and releasing DISPLAY-CLEAR WRITE while adjusting MANUAL VERNIER, center the display indication (a narrow spike). Adjust the FINE FREQUENCY control for a peak display of the 10 kHz input signal.

*If the Y-Axis output is out of tolerance, perform the Linear and Log Gain Adjustments (Paragraph 5-77).

d. Reposition the following front panel control:

AMPLITUDE MODE.....LOG 1 dB/DIV

e. Readjust the FINE FREQUENCY control for a peak display indication. Adjust VERNIER (Amplitude) for a full scale −1 dB display indication (1 major division down from full scale).

f. Adjust the frequency synthesizer and 3580A FREQUENCY to the frequencies given by Table 5-13. Always peak the display indication with the FINE FREQUENCY control and check for proper amplitude accuracy.

**Table 5-13. Balanced Input Frequency Response Tests.**

| FREQUENCY | INPUT 900 Ω | DISPLAY ACCURACY |
|---|---|---|
| 10 kHz | 0 dBm | CAL to −1 dB |
| 40 Hz $\Delta_1$ | 0 dBm | −1 dB ± .5 dB (± .5 major divisions) |
| 300 Hz | 0 dBm | −1 dB ± .5 dB |
| 1 kHz | 0 dBm | −1 dB ± .5 dB |
| 20 kHz | 0 dBm | −1 dB ± .5 dB |

$\Delta_1$ See Backdating.

## 5-48. ADJUSTMENT PROCEDURE.

5-49. This portion of Section V contains complete Adjustment Procedures for the Model 3580A Specturm Analyzer:

POWER SUPPLY CHECKS AND ADJUSTMENTS (Paragraph 5-53).

DISPLAY ADJUSTMENTS (Paragraph 5-68).

SWEEP ALIGNMENT (Paragraph 5-63). $\Delta_{16}$

LINE GENERATOR ADJUSTMENTS (Paragraph 5-68).

I.F. FILTER ALIGNMENT (Paragraph 5-70).

AMPLITUDE CALIBRATION (Paragraph 5-74).

MIXER BALANCE ADJUSTMENTS (Paragraph 5-81).

ADAPTIVE SWEEP MARKER ADJUSTMENT (Paragraph 5-84).

## 5-50. TEST POINT AND ADJUSTMENT LOCATIONS.

5-51. Test point and adjustment locations are shown in Figure 5-9 at the end of Section V. Most of the test points and adjustments are easily accessible with the outer covers removed. In some cases it will be necessary to remove the inner cover and place the appropriate pc boards on extenders. Set the 3580A POWER switch to OFF when removing or replacing a pc assembly.

5-52. The Adjustment Procedure is written in a logical sequence. If the instrument is known to be completely out of calibration, the sequence should be strictly followed. Many times, however, only certain adjustments need to be made. The Performance Tests have been written in such a manner that they will lead you to the proper adjustment. In addition, a brief description of each adjustment is given. Read through the procedures carefully, doing only those that are necessary. Take careful note of any previous adjustments which may affect a future adjustment.

**NOTE**

*Always test the low voltage power supply before performing any calibration. All test measurements should be made with respect to circuit ground, which is available at any point on the instrument chassis. Adjustments should not be made until the instrument has had one hour of continuous warm-up.*

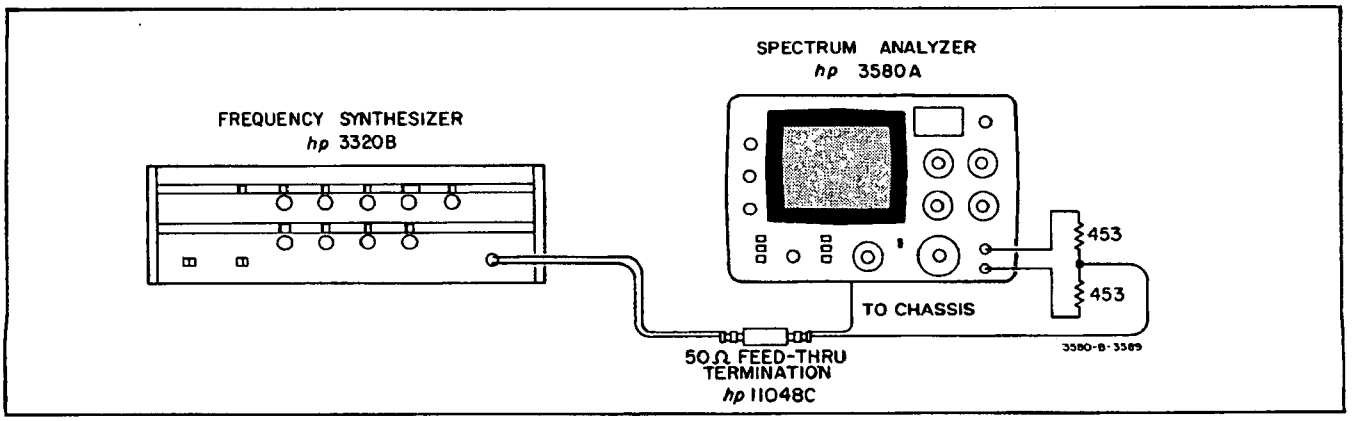


**Figure 5-4. Common Mode Rejection Test.**

## 5-53. POWER SUPPLY TESTS AND ADJUSTMENTS.

5-54. These tests and adjustments check the operation of the low voltage +10 Vdc and −10 Vdc regulated power supplies and set the level of the high voltage −2915 Vdc regulated power supply. The low voltage power supply tests should be performed prior to all other adjustments. In addition, the High Voltage −2915 Vdc power supply voltage should be tested if any of its components were changed or if the instrument will not pass the Frequency Tests (Paragraph 5-9) or Amplitude Tests (Paragraph 5-18) of the Performance Tests.

**5-55. Recommended Test Equipment:**

AC/DC Digital Multimeter (-hp- Model 34740A and 34702A plug-on)
High Voltage DC Probe for above multimeter, calibrated to 1000 V DC Standard (-hp- Model 11045A Probe and -hp- Model 740B DC Standard)

or

Precision .1% High Voltage Probe and appropriate DVM (-hp- 3440A-K05 High Voltage Probe and -hp- Model 3440A DVM)

**5-56. ± 10 Volt Power Supply Tests.**

a. Connect the digital multimeter (DC mode 10 volt range) to the red lead (pin 12) at the A13 board connector. The multimeter reading should be + 10.000 V ± .050 V. If it is not, refer to the Factory-Selected Components information in Section VII.

b. Connect the digital multimeter (DC mode 10 volt range) to the violet lead (pin 10) at the A13 board connector. The dc voltage present should be −10.000 V ± .050 V.

c. Test the ac ripple voltage present on the above two leads with the digital multimeter. There should be less than .1 mV ac difference between the reading obtained on each lead and that obtained with a short circuit to the multimeter.

**5-57. High Voltage Power Supply Tests.**

**WARNING**

*The voltages involved in the following measurments may cause serious injury or even death. USE EXTREME CAUTION.*

a. Turn the 3580A POWER switch to the OFF position.

b. Connect up the multimeter's high lead to the green wire at J3 pin 4 on the rear of the A13 board. The low lead is connected to the black wire at J3 pin 2.

c. Turn the 3580A POWER switch to the ON (AC) position. Caution should now be used as potentially dangerous voltages are exposed.

d. Check that the multimeter is reading between 150V and 158V. If the reading is outside this range then adjust A8R1 (HV ADJ) until the multimeter reads within this range.

NOTE

*This adjustment affects the Sweep Alignment (Pargraph 5-63), as well as the Amplitude Calibration (Pargraph 5-74). Repeat the Frequency Tests (Paragraph 5-9) and Amplitude Tests of the Performance Tests to determine if these additional adjustments need to be made.*

e. Turn the 3580A POWER switch to the OFF position and remove the multimeter leads from the unit.

**5-58. Display Adjustments.**

5-59. These adjustments set the proper intensity limits, astigmatism, and trace alignment on the CRT. In many cases, these display parameters will require no adjustments.

**5-60. Intensity Limit Adjustment.**

a. Turn the 3580A power switch to OFF. Unplug the A13J3 connector. Remove the nylon access screw from the top of the high voltage power supply box. Turn the front panel INTENSITY control to the "9 o'clock" position. Turn the 3580A POWER switch back to ON (ac).

**WARNING**

*The voltages present inside the high voltage power supply box can cause serious injury. Never place an uninsulated conductive tool or object inside this box while the instrument is turned on.*

b. Using an insulated non-metallic tuning wand, such as -hp- Part No. 8710-0033, adjust A11R1 (INTENSITY LIMIT, inside high voltage power supply box) so that the dot on the CRT just disappears.

c. Replace the nylon screw in the high voltage power supply box.

**5-61. Astigmatism Adjustment.**

a. Adjust the front panel focus fully CCW. Turn the front panel INTENSITY adjust to about 10 or 11 o'clock so that the dot on the CRT is bright enough to see, but does not form a "halo".

b. Adjust A8R2 (ASTIG. ADJ.) for the largest circular dot.

c. Turn the 3580A POWER switch to OFF. Reconnect the connector to A13J3. Turn the 3580A POWER switch back to ON (ac).

**5-62. Trace Alignment Adjustment.**

a. Position the 3580A front panel controls as follows:

ADAPTIVE SWEEP.....Centered
DISPLAY.....All pushbuttons released
AMPLITUDE MODE....LOG 10 dB/DIV
APLITUDE REF LEVEL.....NORMAL
dBV/LIN-dBm 600 Ω.....dBV/LIN
INPUT SENSITIVITY.....−30 dB
VERNIER (Amplitude).....CAL
(Fully CW)
FREQUENCY.....00000 Hz
START-CTR ..... START
RESOLUTION BANDWIDTH.....300 Hz
DISPLAY SMOOTHING.....MIN
FREQ. SPAN/DIV.....0.2 kHz
SWEEP TIME/DIV.....0.1 SEC
SWEEP MODE.....REP

Option 002: Set dBm 900 Ω/LIN-dBm 600 Ω switch to dBm 900 Ω; set INPUT MODE switch to UNBAL.

b. Adjust the front panel ADAPTIVE SWEEP for a line in the middle of the display. Adjust the front panel FOCUS control for the narrowest and sharpest line.

c. Set the rear panel ROTATION DISPLAY ADJUST (A40R39) initially to its center position. Δ21 Adjust A13R5 (TRACE ALIGN) for a level trace. If unable to achieve this, readjust the rear panel DISPLAY ADJUST rotation control.

**5-63. Sweep Alignment.**

5-64. These adjustments calibrate the frequency sweep limts. They should be done if the Frequency Tests (Paragraph 5-9) or Sweep Tests (Paragraph 5-13) of the Performance Tests cannot be passed by the instrument. In addition, the adjustment should be made if the high voltage supply was previously adjusted.

**5-65. Recommended Test Equipment.**

Digital Multimeter (-hp- Model 34740A and 34702A plug-on)

Oscilloscope (-hp- Model 180A with 1801A and 1820A plug-ins)

**5-66. Linear Sweep Adjustments.**

a. Position the following front panel controls: (Only those controls printed in **BOLD** require a change from the previous adjustments).

**ADAPTIVE SWEEP.....OFF**
DISPLAY.....All pushbuttons released
AMPLITUDE MODE....LOG 10 dB/DIV
dBV/Lin-dBm 600 Ω.....dBV/LIN
**INPUT SENSITIVITY.....CAL**
VERNIER (Amplitude).....CAL
(Fully CW)
START-CTR ..... START
RESOLUTION BANDWIDTH.....300 Hz
DISPLAY SMOOTHING.....MIN
**FREQ. SPAN/DIV.....0 kHz**
SWEEP TIME/DIV.....0.1 SEC
**SWEEP MODE.....RESET**
FREQUENCY.....00000 Hz

Option 002: Set dBm 900 Ω/LIN-dBm 600 Ω switch to dBm 900 Ω; set INPUT MODE switch to UNBAL.

b. Remove the inner circuit board shield (covering A2-A5). Connect the multimeter (DC mode 10.0volt range) to A2TP4.

c. Change the Sweep mode to LOG ZERO. Turn the fine FREQUENCY control fully CCW; turn the fine FREQUENCY control five revolutions CW. (This assures the control of being close to its center positions.)

d. Adjust A2L3 (100 kHz FREQ. ADJ.) for a FREQUENCY display of 00000 Hz ± 10 Hz; this is not a critical adjustment.

e. Adjust A2L1 (100 kHz VCO ADJ.) for a voltage reading on the multimeter between −1.4 V and −1.5V. Record the reading.

f. Set the SWEEP MODE control to MANUAL and turn the MANUAL VERNIER control fully CCW.

g. Reposition the following front panel control:

FREQ. SPAN/DIV .....5 kHz

h. Adjust A3R54 (INTEGRATOR BALANCE) for a frequency display of 00000 Hz ± 1 Hz.

i. Position the front panel MANUAL VERNIER control fully CW.

j. Adjust A2r75 (BUFFER AMP GAIN ADJ.) for a display of 50000 Hz ± 1 Hz.

k. Adjust A2R100 (VCO RANGE SET) for a reading on the multimeter equal to −1.45 V to −1.75 V.

l. Repeat Steps j and k as necessary to meet the frequency and voltage specifications.

m. Position the front panel MANUAL VERNIER fully CCW.

n. Reposition the following front panel controls:

RESOLUTION BANDWIDTH ....300 Hz
SWEEP TIME/DIV .....2 SEC
SWEEP MODE.....REP
FREQUENCY.....00000 Hz

o. Adjust A13R1 (HORIZONTAL GAIN ADJ.) and A13R2 (HORIZONTAL POSITION ADJ.) for a full 10 cm display. The 10 kHz signal and its harmonics should fall on the proper graticule marking ± ½ minor divisions (2nd, 4th, 6th, 8th and 10th graticule from the left).

p. Connect the input of the oscilloscope to A3TP11. Set the oscilloscope input to dc coupling. Connect a jumper between A3TP3 and A3TP4.

q. Adjust the A3R14 (RAMP COMPARATOR BALANCE) so that the output of the ramp comparator (on scope) just changes states.

r. Remove the jumpers from the A3 board.

s. Reposition the following front panel control:

SWEEP TIME/DIV .....0.1 sec

t. Alternately press and release the STORE pushbutton, adjusting A8R4 (RAMP SIZE ADJ.) so that the 40 kHz harmonic of the CAL signal falls on the same point for both the STORE and non-STORE display modes.

u. Reposition the following front panel controls:

SWEEP MODE .....RESET
FREQUENCY.....50000 Hz
START-CTR .....START

v. Record the reading in the FREQUENCY display.

w. Reposition the following front panel control:

START-CTR .....CTR

x. Adjust A16R52 so that the FREQUENCY reading is the same as that in Step v.

y. Repeat Steps u through x until there is no change in the FREQUENCY display when switching from START to CTR.

**5-67. Log Sweep Adjustments.**

a. Position the following front panel controls: (Only those controls printed in **BOLD** require a change from the previous adjustements).

ADAPTIVE SWEEP.....OFF
**DISPLAY.....All pushbuttons released**
AMPLITUDE MODE....LOG 10 dB/DIV
AMPLITUDE REF LEVEL....NORMAL
dBV/LIN-dBm 600 Ω.....dBV/LIN
INPUT SENSITIVIY.....CAL
VERNIER (Amplitude).....CAL (Fully CW)
START-CTR ..... START
RESOLUTION BANDWIDTH.....300 Hz
DISPLAY SMOOTHING.....MIN
FREQ. SPAN/DIV.....5 kHz
**SWEEP TIME/DIV.....0.5 SEC**
**SWEEP MODE.....LOG ZERO**
FREQUENCY.....00020 Hz

Option 002: Set dBm 900 Ω/LIN-dBm 600 Ω switch to dBm 900 Ω; set INPUT MODE switch to UNBAL.

b. Momentarily push:

DISPLAY.....CLEAR WRITE

c. Reposition the following front panel control:

SWEEP MODE.....LOG

d. Adjust the rear panel HORIZONTAL DISPLAY DISPLAY position control to the center of its range.

Δ 21

e. Allow the 3580A to make three complete sweeps. Then adjust A3R76 (20 kHz LOG SWEEP ADJ.) so that the 20 kHz harmonic of the CAL signal falls on the 20 kHz LOG SWEEP graticule.

**NOTE**

*After each adjustment of A3R76, wait for the 3580A to sweep through 20 kHz before attempting to readjust the setting.*

**5-68. Line Generator Adjustments. Δ16**

5-69. This adjustment properly aligns the line generator circuitry. The adjustment is usually not necessary, but should be done if components in the high voltage power supply are changed, or if the display exhibits overshoot to abrupt level changes.

## PERFORMANCE TEST CARD

Hewlett-Packard Model 3580A
Spectrum Analyzer
Serial No. _____

Tests Performed By _____
Date _____

### RANGE AND FREQUENCY ACCURACY TESTS

| Ideal Frequency Display Reading | Actual | Test Limits |
|---|---|---|
| 30000 Hz | _____ Hz | ± 3 Hz |
| 30000 Hz | _____ Hz | ± 3 Hz |

### DISPLAY ACCURACY TESTS

The separation between the Zero Response and 50 kHz harmonic should be 10 div. ± .2 div. The separation between any two adjacent responses should be 2 div. ± .04 div.

Pass _____ Fail _____

### FREQUENCY SPAN TESTS

| Frequency Span/Div. | Frequency Display Reading (Manual Vernier Fully CW) | Test Limits |
|---|---|---|
| 5 Hz | _____ Hz | 00050 Hz ± 1 Hz |
| 10 Hz | _____ Hz | 00100 Hz ± 2 Hz |
| 20 Hz | _____ Hz | 00200 Hz ± 4 Hz |
| 50 Hz | _____ Hz | 00500 Hz ± 10 Hz |
| .1 kHz | _____ Hz | 01000 Hz ± 20 Hz |
| .2 kHz | _____ Hz | 02000 Hz ± 40 Hz |
| .5 kHz | _____ Hz | 05000 Hz ± 100 Hz |
| 1 kHz | _____ Hz | 10000 Hz ± 200 Hz |
| 2 kHz | _____ Hz | 20000 Hz ± 400 Hz |

### LOG SWEEP TEST

The 20 kHz harmonic of the internal CAL signal must fall on the 20 kHz LOG SWEEP graticule (± 1 minor division).

Pass _____ Fail _____

### SWEEP TIME TEST

All sweep rates must work properly.

Pass _____ Fail _____

### BANDWIDTH SWITCHING ACCURACY TEST

| Bandwidth | Display Indication (0 dB full scale) (1 dB/div) | Test Limits |
|---|---|---|
| 100 Hz | _____ dB | -1.0 dB ± .5 dB |
| 30 Hz | _____ dB | -1.0 dB ± .5 dB |
| 10 Hz | _____ dB | -1.0 dB ± .5 dB |
| 3 Hz | _____ dB | -1.0 dB ± .5 dB |
| 1 Hz | _____ dB | -1.0 dB ± 1 dB |

## PERFORMANCE TEST CARD (cont'd)

### LOG AMPLITUDE DISPLAY ACCURACY TESTS

| Input Level Standard | Input Level Option 002 900 Ω | Display Indication (0 dB full scale) (10 dB/div) | Test Limits |
|---|---|---|---|
| - 10 dBV | - 10 dBm 900 Ω | _____ dB | - 10 dB ± 2 dB |
| - 20 dBV | - 20 dBm | _____ dB | - 20 dB ± 2 dB |
| - 30 dBV | - 30 dBm | _____ dB | - 30 dB ± 2 dB |
| - 40 dBV | - 40 dBm | _____ dB | - 40 dB ± 2 dB |
| - 50 dBV | - 50 dBm | _____ dB | - 50 dB ± 2 dB |
| - 60 dBV | - 60 dBm | _____ dB | - 60 dB ± 2 dB |
| - 70 dBV | - 70 dBm | _____ dB | - 70 dB ± 2 dB |
| - 80 dBV | - 80 dBm | _____ dB | - 80 dB ± 2 dB |

### LINEAR AMPLITUDE DISPLAY ACCURACY TESTS

| Input Level | Display Indication (1 V full scale) (10 dB/div) | Test Limits |
|---|---|---|
| .9 V | _____ V | .90 V ± .02 V |
| .8 V | _____ V | .80 V ± .02 V |
| .7 V | _____ V | .70 V ± .02 V |
| .6 V | _____ V | .60 V ± .02 V |
| .5 V | _____ V | .50 V ± .02 V |
| .4 V | _____ V | .40 V ± .02 V |
| .3 V | _____ V | .30 V ± .02 V |
| .2 V | _____ V | .20 V ± .02 V |
| .1 V | _____ V | .10 V ± .02 V |

### AMPLITUDE REFERENCE TESTS (Linear Mode)

| 3580A Input (10 kHz) | Amp Rev Level | Display Indication (% of full scale) | Test Limits |
|---|---|---|---|
| 200 mV | - 10 | _____ % | 90% ± 3% (± .3 major divisions) |
| 100 mV | - 20 | _____ % | 90% ± 3% (± .3 major divisions) |
| 20 mV | - 30 | _____ % | 90% ± 3% (± .3 major divisions) |
| 10 mV | - 40 | _____ % | 90% ± 3% (± .3 major divisions) |
| 2 mV | - 50 | _____ % | 90% ± 3% (± .3 major divisions) |
| 1 mV | - 60 | _____ % | 90% ± 3% (± .3 major divisions) |
| .2 mV | - 70 | _____ % | 90% ± 10% (± 1 major division) |

### AMPLITUDE REFERENCE LEVEL TEST (Log Mode)

| Amp Rev Level | Multimeter Reading | Test Limits |
|---|---|---|
| - 10 dB | _____ V | 2.00 V ± .02 V |
| - 20 dB | _____ V | 2.50 V ± .02 V |
| - 30 dB | _____ V | 3.00 V ± .03 V |
| - 40 dB | _____ V | 3.50 V ± .03 V |
| - 50 dB | _____ V | 4.00 V ± .04 V |
| - 60 dB | _____ V | 4.50 V ± .04 V |
| - 70 dB | _____ V | 5.00 V ± .05 V |

## PERFORMANCE TEST CARD (cont'd)

### INPUT ATTENUATOR TESTS

| Input | Amp Ref Level | Input Sensitivity (according to white marker) | Display Indication (% of full scale) | Test Limits (full scale ± .3 major div) |
|---|---|---|---|---|
| .2 V | - 30 dB | .2 V | _____ % | 100% ± 3% |
| .1 V | - 30 dB | .1 V | _____ % | 100% ± 3% |
| 20 mV | - 30 dB | 20 mV | _____ % | 100% ± 3% |
| .2 V | normal | .2 V | _____ % | 100% ± 3% |
| .1 V | normal | .1 V | _____ % | 100% ± 3% |
| 20 mV | normal | 20 mV | _____ % | 100% ± 3% |
| 10 mV | normal | 10 mV | _____ % | 100% ± 3% |
| 2 mV | normal | 2 mV | _____ % | 100% ± 3% |
| 1 mV | normal | 1 mV | _____ % | 100% ± 3% |
| .2 mV | normal | .2 mV | _____ % | 100% ± 3% |

### FREQUENCY RESPONSE TESTS

| Input Level | | | | | |
|---|---|---|---|---|---|
| Standard | Option 002 (900 Ω) | Input Sensitivity (according to white marker) | Frequency | Display Indication (0 dB = full scale 1 dB/div) | Test Limits |
| 0 dBV | 0 dBM | 0 dB | 10 Hz | _____ dB | 0 dB ± .5 dB |
| 0 dBV | 0 dBM | 0 dB | 20 Hz | _____ dB | 0 dB ± .3 dB |
| 0 dBV | 0 dBM | 0 dB | 1 kHz | _____ dB | 0 dB ± .3 dB |
| 0 dBV | 0 dBM | 0 dB | 20 kHz | _____ dB | 0 dB ± .3 dB |
| 0 dBV | 0 dBM | 0 dB | 50 kHz | _____ dB | 0 dB ± .5 dB |
| - 10 dBV | - 10 dBM | - 10 dB | 10 Hz | _____ dB | 0 dB ± .5 dB |
| - 10 dBV | - 10 dBM | - 10 dB | 20 Hz | _____ dB | 0 dB ± .3 dB |
| - 10 dBV | - 10 dBM | - 10 dB | 1 kHz | _____ dB | 0 dB ± .3 dB |
| - 10 dBV | - 10 dBM | - 10 dB | 20 kHz | _____ dB | 0 dB ± .3 dB |
| - 10 dBV | - 10 dBM | - 10 dB | 50 kHz | _____ dB | 0 dB ± .5 dB |
| - 20 dBV | - 20 dBM | - 20 dB | 10 Hz | _____ dB | 0 dB ± .5 dB |
| - 20 dBV | - 20 dBM | - 20 dB | 20 Hz | _____ dB | 0 dB ± .3 dB |
| - 20 dBV | - 20 dBM | - 20 dB | 1 kHz | _____ dB | 0 dB ± .3 dB |
| - 20 dBV | - 20 dBM | - 20 dB | 20 kHz | _____ dB | 0 dB ± .3 dB |
| - 20 dBV | - 20 dBM | - 20 dB | 50 kHz | _____ dB | 0 dB ± .5 dB |
| - 30 dBV | - 30 dBM | - 30 dB | 10 Hz | _____ dB | 0 dB ± .5 dB |
| - 30 dBV | - 30 dBM | - 30 dB | 20 Hz | _____ dB | 0 dB ± .3 dB |
| - 30 dBV | - 30 dBM | - 30 dB | 1 kHz | _____ dB | 0 dB ± .3 dB |
| - 30 dBV | - 30 dBM | - 30 dB | 20 kHz | _____ dB | 0 dB ± .3 dB |
| - 30 dBV | - 30 dBM | - 30 dB | 50 kHz | _____ dB | 0 dB ± .5 dB |
| - 40 dBV | - 40 dBM | - 40 dB | 10 Hz | _____ dB | 0 dB ± .5 dB |
| - 40 dBV | - 40 dBM | - 40 dB | 20 Hz | _____ dB | 0 dB ± .3 dB |
| - 40 dBV | - 40 dBM | - 40 dB | 1 kHz | _____ dB | 0 dB ± .3 dB |
| - 40 dBV | - 40 dBM | - 40 dB | 20 kHz | _____ dB | 0 dB ± .3 dB |
| - 40 dBV | - 40 dBM | - 40 dB | 50 kHz | _____ dB | 0 dB ± .5 dB |

### INTERNAL CALIBRATOR TEST

| | Display Indication (0 dB = full scale) | Test Limit |
|---|---|---|
| 10 kHz Cal. Signal Level | _____ dB | 0 dB ± .15 dB |

## PERFORMANCE TEST CARD (cont'd)

### BANDWIDTH TESTS

| Resolution Bandwidth | Lower 3 dB Frequency | Upper 3 dB Frequency | Test Limits |
|---|---|---|---|
| 300 Hz | 10 kHz | _____ kHz | 10.3 kHz ± 45 Hz |
| 100 Hz | 1 kHz | _____ kHz | 1.1 kHz ± 15 Hz |
| 30 Hz | 1 kHz | _____ kHz | 1.030 kHz ± 4.5 Hz |
| 10 Hz | 1 kHz | _____ kHz | 1.010 kHz ± 1.5 Hz |

| Resolution Bandwidth | Lower 60 dB Frequency | Upper 60 dB Frequency | Test Limits |
|---|---|---|---|
| 3 Hz | 1 kHz | _____ kHz | 1.030 kHz ± 4.5 Hz |
| 1 Hz | 1 kHz | _____ kHz | 1.010 kHz ± 1.5 Hz |

### NOISE LEVEL TESTS

| Bandwidth | Frequency | Noise (- 70 dB = full scale) | Test Limits |
|---|---|---|---|
| 300 Hz | 10 kHz | _____ dB | <- 130 dB |
| 30 Hz | 10 kHz | _____ dB | <- 140 dB |
| 30 Hz | 100 Hz | _____ dB | <- 132 dB |
| 30 Hz | 1 kHz | _____ dB | <- 140 dB |
| 1 Hz | 1 kHz | _____ dB | <- 150 dB |
| 1 Hz | 100 Hz | _____ dB | <- 143 dB |
| 1 Hz | 10 Hz | _____ dB | <- 135 dB |

### NOISE SIDEBAND TEST

Noise Sidebands must be at least 70 dB below continuous wave signal, ± 10 Hz away.

Pass _____ Fail _____

### SPURIOUS RESPONSE TEST Δ 19

All non-line-related spurious responses must be at least 80 dB below a full scale reference.

Pass _____ Fail _____

### LINE-RELATED SPURIOUS RESPONSE TEST

All line-related spurious responses must be less than −135 dBV (0.18 μ V).

Pass _____ Fail _____

### IF FEEDTHRU TEST

IF Feedthru must be at least - 70 dB below the full scale reference.

Pass _____ Fail _____

### ZERO BEAT RESPONSE TEST

The zero beat response must be at least 30 dB below the full scale reference.

Pass _____ Fail _____

### INPUT IMPEDANCE TESTS

| Frequency | Display Indication (0 dB = full scale) Without 1 MΩ | With 1 MΩ | Test Limit |
|---|---|---|---|
| 1 kHz | 0 dB | _____ dB | - 3 dB ± 1 dB |

## PERFORMANCE TEST CARD (cont'd)

INPUT IMPEDANCE TESTS (cont'd)

| Frequency | Display Indication (with 1 MΩ Resistor) | Test Limit |
|---|---|---|
| 1 kHz | 0 dB | |
| 10 kHz | _____ dB | - 3 dB ± 1 dB |

**TRACKING OSCILLATOR OUTPUT TESTS**

FREQUENCY RESPONSE:

| Instrument | Frequency | Multimeter Reading | Test Limits |
|---|---|---|---|
| Standard | 50 Hz | 1.00 volt rms | |
| | 50 kHz | _____ volts rms | 1.00 volt ± .06 volts |
| Option 002 | 300 Hz | 1.00 volt rms | |
| | 20 kHz | _____ volts rms | 1.00 volt ± .06 volts |

FREQUENCY ACCURACY:

| Resolution Bandwidth | Display Indication | Test Limit |
|---|---|---|
| 30 Hz | 2 V (full scale) | |
| 3 Hz | _____ V | 1 V – 2 V (half to full scale) |

DISTORTION:

Distortion: _____ dB  Test Limit: less than - 40 dB

**RECORDER OUTPUT TESTS**

| Recorder Output | Display Indication | Multimeter Reading | Test Limits |
|---|---|---|---|
| X-Axis | Manual Vernier fully CCW | _____ V | 0 V dc ± .15 V |
| | Manual Vernier fully CW | _____ V | 5 V dc ± .15 V |
| Y-Axis | Full Scale | _____ V | 5 V dc ± .15 V |
| | Bottom Graticule | _____ V | 0 V dc ± .15 V |

**COMMON MODE REJECTION TEST (Option 002 only)**

| Common Mode Input | Display Indication (full scale = 0 dBM 900 Ω) | Test Limit |
|---|---|---|
| 60 Hz - 0 dBM 900 Ω | _____ dBM 900 Ω | Less than - 60 dBm 900 Ω |

**FREQUENCY RESPONSE TEST (Option 002 only)**

| Frequency | Display Indication (- 1 dB = 0 dBM 900 Ω, 1 dB/div) | Test Limit (± .5 major div) |
|---|---|---|
| 300 Hz | _____ dBM 900 Ω | - 1 dB ± .5 dB |
| 1 kHz | _____ dBM 900 Ω | - 1 dB ± .5 dB |
| 20 kHz | _____ dBM 900 Ω | - 1 dB ± .5 dB |

Replaceable Parts

## Table 6-3. Replaceable Parts.

| Reference Designation | HP Part Number | Qty | Description | Mfr Code | Mfr Part Number |
|---|---|---|---|---|---|
| A1 | 03580-66501 | 1 | BOARD ASSEMBLY-MOTHER | 28480 | 03580-66501 |
| A1CR1 | 1901-0040 | 95 | DIODE-SWITCHING 30V 50MA 2NS DO-35 | 28480 | 1901-0040 |
| A1R1 | 0757-0280 | 22 | RESISTOR 1K 1% .125W F TC=0+-100 | 24546 | C4-1/8-T0-1001-F |
| A1R2 | 0757-0280 | | RESISTOR 1K 1% .125W F TC=0+-100 | 24546 | C4-1/8-T0-1001-F |
| A1R3 | 0698-3228 | 10 | RESISTOR 49.9K 1% .125W F TC=0+-100 | 28480 | 0698-3228 |
| A1R20 | 0698-4089 | 2 | RESISTOR 28K 1% .125W F TC=0+-100 | 24546 | C4-1/8-T0-2802-F |
| A2 | 03581-66512 | 1 | BOARD ASSY,OSCILLATOR (DOES NOT INCLUDE A12Y1 OR A12R65,SEE PARAGRAPH 7-19) | 28480 | 03581-66512 |
| A2C1 | 0160-4812 | 3 | CAPACITOR-FXD 220pF .05 | 28480 | 0160-4812 |
| A2C2 | 0160-0162 | 1 | CAPACITOR-FXD .022UF +/-10% 200WVDC | 56289 | 292P22392 |
| A2C3 | 0180-1714 | 1 | CAPACITOR-FXD: 330UF+-10% 6VDC TA-SOLID | 56289 | 150D337X9006S2 |
| A2C4 | 0121-0426 | 6 | CAPACITOR, VAR, TRMR, MICA, 50/380PF | 72136 | T52517-7 |
| A2C5 | 0160-4571 | 17 | CAPACITOR-FXD .1uF +80 -20 | 28480 | 0160-4571 |
| A2C6 | 0160-4571 | | CAPACITOR-FXD .1uF +80 -20 | 28480 | 0160-4571 |
| A2C7 | 0140-0149 | 1 | CAPACITOR-FXD 470PF+-5% 300WVDC | 72136 | DM15F471J0300WV1CR |
| A2C8 | 0160-0154 | 3 | CAPACITOR-FXD .0022UF+-10% 200WVDC | 56289 | 292P22292 |
| A2C9 | 0150-0029 | 17 | CAPACITOR-FXD 1.0 PF +- 10% 500WVDC | | |
| A2C11 | 0160-4807 | 1 | CAPACITOR-FXD 33pF 100V | 28480 | 0160-4807 |
| A2C12 | 0160-4822 | 2 | CAPACITOR-FXD 1000pF 100V | 28480 | 0160-4822 |
| A2C13 | 0160-3847 | 40 | CAPACITOR-FXD .01uF 50V | 28480 | 0160-3847 |
| A2C14 | 0160-4814 | 2 | CAPACITOR-FXD 150pF 100V | 28480 | 0160-4814 |
| A2C15 | 0160-4812 | | CAPACITOR-FXD 220pF .05 | 28480 | 0160-4812 |
| A2C16 | 0140-0176 | 4 | CAPACITOR-FXD 100PF+-2% 300WVDC | 72136 | DM15F101G0300WV1CR |
| A2C17 | 0160-4833 | 20 | CAPACITOR-FXD .022uF 100V | 28480 | 0160-4833 |
| A2C18 | C180-0106 | 7 | CAPACITOR-FXD: 60UF+-20% 6VDC TA-SOLID | 56289 | 150D606X0006B2 |
| A2C20 | 0160-0162 | 2 | CAPACITOR-FXD .022UF+-10% 200WVDC | 56289 | 292P22392 |
| A2C21 | C16C-0160 | | CAPACITOR-FXD .0082UF+-10% 200WVDC | 56289 | 292P82292 |
| A2C22 | 0180-0228 | 13 | CAPACITOR-FXD: 22UF+-10% 15VDC TA-SOLID | 56289 | 150D226X9015B2 |
| A2C23 | 0160-4814 | | CAPACITOR-FXD 150pF 100V | 28480 | 0160-4814 |
| A2C24 | 0160-4833 | | CAPACITOR-FXD .022uF 100V | 28480 | 0160-4833 |
| A2C25 | 0160-4571 | | CAPACITOR-FXD .1uF +80 -20 | 28480 | 0160-4571 |
| A2C26 | 0160-4571 | | CAPACITOR-FXD .1uF +80 -20 | 28480 | 0160-4571 |
| A2C27 | 0160-2939 | 1 | CAPACITOR-FXD 420pF 500V | 28480 | 0160-2939 |
| A2C28 | 0150-0116 | 1 | CAPACITOR-FXD 47pF .10N750 | 28480 | 0150-0116 |
| A2C29 | 0180-1701 | 2 | CAPACITOR-FXD: 6.8UF+-20% 6VDC TA-SOLID | 56289 | 150D685X0006A2 |
| A2C31 | 0160-4833 | | CAPACITOR-FXD .022uF 100V | 28480 | 0160-4833 |
| A2C32 | 0160-4571 | | CAPACITOR-FXD .1uF +80 -20 | 28480 | 0160-4571 |
| A2C33 | 0140-0200 | 6 | CAPACITOR-FXD 390PF+-5% 300WVDC | 72136 | DM15F391J0300WV1CR |
| A2C34 | 0160-3847 | | CAPACITOR-FXD .01uF 50V | 28480 | 0160-3847 |
| A2C35 | 0160-0940 | 1 | CAPACITOR-FXD 2400pF | 28480 | 0160-0940 |
| A2C36 | 0160-3847 | | CAPACITOR-FXD .01uF 50V | 28480 | 0160-3847 |
| A2C37 | 0180-0210 | 10 | CAPACITOR-FXD: 3.3UF+-20% 15VDC TA | 56289 | 150D335X0015A2 |
| A2C38 | 0160-3847 | | CAPACITOR-FXD .01uF 50V | 28480 | 0160-3847 |
| A2C39 | 018C-0061 | 11 | CAPACITOR-FXD: 100UF+75-10% 16VDC AL | 56289 | 30D107G016DC2 |
| A2C41 | 0160-2585 | 1 | CAPACITOR-FXD .0022UF+-1% 100WVDC | 28480 | 0160-2585 |
| A2C42 | 016C-2206 | 2 | CAPACITOR-FXD 160PF+-5% 300WVDC | 28480 | 0160-2206 |
| A2C43 | 0140-0233 | 3 | CAPACITOR-FXD 480PF+-1% 300WVDC | 72136 | DM15F481F0300WV1C |
| A2C44 | 0160-2587 | 1 | CAPACITOR-FXD .004UF+-1% 100WVDC | 28480 | 0160-2587 |
| A2C45 | 0160-0841 | 1 | CAPACITOR-FXD .00174UF+-1% 300WVDC | 28480 | 0160-0841 |
| A2C46 | 018C-0106 | | CAPACITOR-FXD: 60UF+-20% 6VDC TA-SOLID | 56289 | 150D606X0006B2 |
| A2C47 | 0180-0210 | | CAPACITOR-FXD: 3.3UF+-20% 15VDC TA | 56289 | 150D335X0015A2 |
| A2C48 | 0160-4801 | | CAPACITOR-FXD 100 pF 100V | 28480 | 0160-4801 |
| A2C49 | 0160-4571 | 18 | CAPACITOR-FXD .1uF +80 -20 | 28480 | 0160-4571 |
| A2C51 | 0180-0210 | | CAPACITOR-FXD: 3.3UF+-20% 15VDC TA | 56289 | 150D335X0015A2 |
| A2C52 | 0160-4812 | | CAPACITOR-FXD 220pF .05 | 28480 | 0160-4812 |
| A2C53 | 0180-0228 | | CAPACITOR-FXD: 22UF+-10% 15VDC TA-SOLID | 56289 | 150D226X9015B2 |
| A2C54 | 015C-0022 | | CAPACITOR-FXD 3.3PF+-10% 500WVDC | 95121 | TYPE QC |
| A2C55 | 0160-4801 | | CAPACITOR-FXD 100pF 100V | 28480 | 0160-4801 |
| A2C56 | 0180-0063 | 1 | CAPACITOR-FXD: 500UF+75-10% 3VDC AL | 56289 | 300S07G003DF2 |
| A2C57 | 0180-0228 | | CAPACITOR-FXD: 22UF+-10% 15VDC TA-SOLID | 56289 | 150D226X9015B2 |
| A2C58 | C16C-0174 | 5 | CAPACITOR-FXD .47UF+80-20% 25WVDC | 28480 | 0160-0174 |
| A2C59 | 0180-0228 | | CAPACITOR-FXD: 22UF+-10% 15VDC TA-SOLID | 56289 | 150D226X9015B2 |
| A2C61 | 0180-0228 | | CAPACITOR-FXD: 22UF+-10% 15VDC TA-SOLID | 56289 | 150D226X9015B2 |
| A2C62 | 0180-0106 | | CAPACITOR-FXD: 60UF+-20% 6VDC TA-SOLID | 56289 | 150D606X0006B2 |
| A2C63 | C180-0106 | | CAPACITOR-FXD: 60UF+-20% 6VDC TA-SOLID | 56289 | 150D606X0006B2 |
| A2C64 | 016C-0174 | | CAPACITOR-FXD .47UF+80-20% 25WVDC | 28480 | 0160-0174 |
| A2C65 | 018C-0106 | | CAPACITOR-FXD: 60UF+-20% 6VDC TA-SOLID | 56289 | 150D606X0006B2 |
| A2C66 | 0160-4571 | | CAPACITOR-FXD .1uF +80 -20 | 28480 | 0160-4571 |
| A2C67 | 0180-0228 | | CAPACITOR-FXD: 22UF+-10% 15VDC TA-SOLID | 56289 | 150D226X9015B2 |
| A2C68 | 0180-0210 | | CAPACITOR-FXD: 3.3UF+-20% 15VDC TA | 56289 | 150D335X0015A2 |

See introduction to this section for ordering information
*Indicates factory selected value

Replaceable Parts

## Table 6-3. Replaceable Parts (Cont'd).

| Reference Designation | HP Part Number | Qty | Description | Mfr Code | Mfr Part Number |
|---|---|---|---|---|---|
| A2C69 | 0180-0228 | | CAPACITOR-FXD; 22UF+-10% 15VDC TA-SOLID | 56289 | 150D226X9015B2 |
| A2C70,72-75 | 0160-3847 | | CAPACITOR-FXD .01uF 50V | 28480 | 0160-3847 |
| A2CR2 | 0122-0182 | 2 | DIODE: VOLTAGE VARIABLE CAPACITANCE | 28480 | 0122-0182 |
| A2CR3 | 0122-0182 | | DIODE: VOLTAGE VARIABLE CAPACITANCE | 28480 | 0122-0182 |
| A2CR4 | 1901-0040 | | DIODE; SWITCHING; ; 30V MAX VRM 50MA | 28480 | 1901-0040 |
| A2CR5 | 1901-0040 | | DIODE; SWITCHING; ; 30V MAX VRM 50MA | 28480 | 1901-0040 |
| A2CR7 | 1901-0040 | | DIODE; SWITCHING; ; 30V MAX VRM 50MA | 28480 | 1901-0040 |
| A2CR8 | 1901-0040 | | DIODE; SWITCHING; ; 30V MAX VRM 50MA | 28480 | 1901-0040 |
| A2CR9 | 1902-0041 | 5 | DIODE; ZENER; 5.11V VZ; .4W MAX PD | 04713 | SZ 10939-98 |
| A2CR11 | 1901-0040 | | DIODE; SWITCHING; ; 30V MAX VRM 50MA | 28480 | 1901-0040 |
| A2CR12 | 1901-0040 | | DIODE; SWITCHING; ; 30V MAX VRM 50MA | 28480 | 1901-0040 |
| A2CR13 | 1902-0041 | | DIODE; ZENER; 5.11V VZ; .4W MAX PD | 04713 | SZ 10939-98 |
| A2CR14 | 1902-0041 | | DIODE; ZENER; 5.11V VZ; .4W MAX PD | 04713 | SZ 10939-98 |
| A2CR15 | 1901-0040 | | DIODE; SWITCHING; ; 30V MAX VRM 50MA | 28480 | 1901-0040 |
| A2CR16 | 1901-0040 | | DIODE; SWITCHING; ; 30V MAX VRM 50MA | 28480 | 1901-0040 |
| A2L1 | 9100-3288 | 1 | INDUCTOR:POT CORE 330 UH | 28480 | 9100-3288 |
| A2L2 | 9140-0210 | 8 | COIL; FXD; MOLDED RF CHOKE; 100UH 5% | 24226 | 15/103 |
| A2L3 | 9100-0543 | 1 | COIL:VAR 1000 UH 10% | 28480 | 9100-0543 |
| A2L4 | 9140-0137 | 8 | COIL; FXD; MOLDED RF CHOKE; 1MH 5% | 24226 | 19/104 |
| A2L5 | 9100-3278 | 1 | INDUCTOR:POT CORE | 28480 | 9100-3278 |
| A2L6 | 9100-3277 | 4 | INDUCTOR:POT CORE | 28480 | 9100-3277 |
| A2L7 | 9140-0210 | | COIL; FXD; MOLDED RF CHOKE; 100UH 5% | 24226 | 15/103 |
| A2L8 | 9140-0210 | | COIL; FXD; MOLDED RF CHOKE; 100UH 5% | 24226 | 15/103 |
| A2L9 | 9140-0210 | | COIL; FXD; MOLDED RF CHOKE; 100UH 5% | 24226 | 15/103 |
| A2L11 | 9140-0210 | | COIL; FXD; MOLDED RF CHOKE; 100UH 5% | 24226 | 15/103 |
| A2L12 | 9140-0210 | | COIL; FXD; MOLDED RF CHOKE; 100UH 5% | 24226 | 15/103 |
| A2L13 | 9140-0210 | | COIL; FXD; MOLDED RF CHOKE; 100UH 5% | 24226 | 15/103 |
| A2L14 | 9140-0210 | | COIL; FXD; MOLDED RF CHOKE; 100UH 5% | 24226 | 15/103 |
| A2MP1 | 4040-0750 | 2 | EXTRACTOR:PC BOARD, RED | 28480 | 4040-0750 |
| A2MP2 | 03580-00609 | 1 | SHIELD, OSCILLATOR | 28480 | 03580-00609 |
| A2MP3 | 03580-00610 | 1 | SHIELD, CRYSTAL | 28480 | 03580-00610 |
| A2Q1 | 1855-0081 | 5 | TRANSISTOR; J-FET N-CHAN, D-MODE SI | 01295 | 2N5245 |
| A2Q2 | 1853-0010 | 30 | TRANSISTOR PNP SI CHIP PD=360MW | 28480 | 1853-0010 |
| A2Q3 | 1853-0010 | | TRANSISTOR PNP SI CHIP PD=360MW | 28480 | 1853-0010 |
| A2Q4 | 1854-0071 | 63 | TRANSISTOR NPN SI PD=300MW FT=200MHZ | 28480 | 1854-0071 |
| A2Q5 | 1854-0071 | | TRANSISTOR NPN SI PD=300MW FT=200MHZ | 28480 | 1854-0071 |
| A2Q6 | 1855-0234 | 1 | TRANSISTOR; FET DUAL ITS30823 | 28480 | 1855-0234 |
| A2Q7 | 1855-0081 | 1 | TRANSISTOR; J-FET N-CHAN, D-MODE SI | 01295 | 2N5245 |
| A2Q8 | 1853-0010 | | TRANSISTOR PNP SI CHIP PD=360MW | 28480 | 1853-0010 |
| A2Q11 | 1853-0010 | | TRANSISTOR PNP SI CHIP PD=360MW | 28480 | 1853-0010 |
| A2Q12 | 1854-0071 | | TRANSISTOR NPN SI PD=300MW FT=200MHZ | 28480 | 1854-0071 |
| A2Q13 | 1854-0345 | 1 | TRANSISTOR NPN 2N5179 SI PD=200MW | 04713 | 2N5179 |
| A2Q14 | 1854-0351 | 1 | TRANSISTOR NPN SI PD=360MW FT=300MHZ | 28480 | 1854-0351 |
| A2Q15 | 1853-0010 | | TRANSISTOR PNP SI CHIP PD=360MW | 28480 | 1853-0010 |
| A2Q16 | 1853-0010 | | TRANSISTOR PNP SI CHIP PD=360MW | 28480 | 1853-0010 |
| A2Q17 | 1854-0071 | | TRANSISTOR NPN SI PD=300MW FT=200MHZ | 28480 | 1854-0071 |
| A2Q18 | 1854-0071 | | TRANSISTOR NPN SI PD=300MW FT=200MHZ | 28480 | 1854-0071 |
| A2Q19 | 1854-0071 | | TRANSISTOR NPN SI PD=300MW FT=200MHZ | 28480 | 1854-0071 |
| A2Q21 | 1854-0071 | | TRANSISTOR NPN SI PD=300MW FT=200MHZ | 28480 | 1854-0071 |
| A2Q22 | 1853-0010 | | TRANSISTOR PNP SI CHIP PD=360MW | 28480 | 1853-0010 |
| A2Q23 | 1854-0071 | | TRANSISTOR NPN SI PD=300MW FT=200MHZ | 28480 | 1854-0071 |
| A2Q24 | 1853-0010 | | TRANSISTOR PNP SI CHIP PD=360MW | 28480 | 1853-0010 |
| A2Q25 | 1854-0071 | | TRANSISTOR NPN SI PD=300MW FT=200MHZ | 28480 | 1854-0071 |
| A2Q26 | 1853-0010 | | XSTR-PNP SM4713 | 28480 | 1853-0010 |
| A2R1 | C757-0457 | 1 | RESISTOR-FXD 47.5K 1% .125W F TUBULAR | 24546 | C4-1/8-T0-4752-F |
| A2R2 | C757-0477 | 1 | RESISTOR-FXD 332K 1% .125W F TUBULAR | 30983 | MF4C1/8-T0-3323-F |
| A2R3 | C698-5542 | 2 | RESISTOR-FXD 20K 1% .125W F TUBULAR | 19701 | MF4C1/8-T9-2002-F |
| A2R4 | C757-0468 | 1 | RESISTOR-FXD 909K 1% .125W F TUBULAR | 19701 | MFF-1/8,T-1 |
| A2R5 | 2100-3352 | 4 | RESISTOR, VAR, TRMR, 1KOHM 10% C | 73138 | 72XR102 |
| A2R6 | 0698-4536 | 1 | RESISTOR-FXD 340K 1% .125W F TUBULAR | 19701 | MF4C1/8-T0-3403-F |
| A2R7 | 0757-0430 | 7 | RESISTOR-FXD 2.21K 1% .125W F TUBULAR | 24546 | C4-1/8-T0-2211-F |
| A2R8 | C757-0440 | 2 | RESISTOR-FXD 7.5K 1% .125W F TUBULAR | 24546 | C4-1/8-T0-7501-F |
| A2R9 | C698-3274 | 4 | RESISTOR-FXD 10K 1% .125W F TUBULAR | 19701 | MF4C1/8-T9-1002-F |
| A2R10 | 0757-0430 | | RESISTOR-FXD 2.21K 1% .125W F TUBULAR | 24546 | C4-1/8-T0-2211-F |
| A2R11 | 0757-0438 | 25 | RESISTOR-FXD 5.11K 1% .125W F TUBULAR | 24546 | C4-1/8-T0-5111-F |
| A2R12 | C757-0438 | | RESISTOR-FXD 5.11K 1% .125W F TUBULAR | 24546 | C4-1/8-T0-5111-F |
| A2R13 | 0757-0438 | | RESISTOR-FXD 5.11K 1% .125W F TUBULAR | 24546 | C4-1/8-T0-5111-F |
| A2R14 | C757-0416 | 5 | RESISTOR-FXD 511 OHM 1% .125W F TUBULAR | 24546 | C4-1/8-T0-5110-F |
| A2R15 | 0698-4481 | 5 | RESISTOR-FXD 16.5K 1% .125W F TUBULAR | 24546 | C4-1/8-T0-1652-F |
| A2R16 | 0683-1055 | 2 | RESISTOR-FXD 1M .05 1/4W | 01121 | CB1055 |
| A2R17 | 0757-0427 | 6 | RESISTOR-FXD 1.5K 1% .125W F TUBULAR | 24546 | C4-1/8-T0-1501-F |
| A2R18 | 0698-3497 | 6 | RESISTOR-FXD 6.04K 1% .125W F TUBULAR | 16299 | C4-1/8-T0-6041-F |
| A2R19 | 0698-4443 | 2 | RESISTOR-FXD 4.53K 1% .125W F TUBULAR | 16299 | C4-1/8-T0-4531-F |
| A2R21 | 0757-0430 | | RESISTOR-FXD 2.21K 1% .125W F TUBULAR | 24546 | C4-1/8-T0-2211-F |
| A2R22 | 0757-0280 | 17 | RESISTOR-FXD 1K 1% .125W F TUBULAR | 24546 | C4-1/8-T0-1001-F |
| A2R23 | 0757-0442 | 25 | RESISTOR-FXD 10K 1% .125W F TUBULAR | 24546 | C4-1/8-T0-1002-F |
| A2R24 | 0757-0427 | | RESISTOR-FXD 1.5K 1% .125W F TUBULAR | 24546 | C4-1/8-T0-1501-F |
| A2R25 | 0757-0415 | 2 | RESISTOR-FXD 475 OHM 1% .125W F TUBULAR | 24546 | C4-1/8-T0-475R-F |

See introduction to this section for ordering information
*Indicates factory selected value

Replaceable Parts

## Table 6-3. Replaceable Parts (Cont'd).

| Reference Designation | HP Part Number | Qty | Description | Mfr Code | Mfr Part Number |
|---|---|---|---|---|---|
| A2R26 | 0757-0407 | 13 | RESISTOR-FXD 200 OHM 1% .125W F TUBULAR | 24546 | C4-1/8-T0-201-F |
| A2R27 | 0683-1045 | 28 | RESISTOR-FXD 100K .05 1/4W | 01121 | CB1045 |
| A2R28 | 0757-0442 | 19 | RESISTOR-FXD 10K .01 1/8 | 24546 | CR-1/8-TO-1002-F |
| A2R29 | 0757-0442 | 2 | RESISTOR-FXD 10K .01 1/8 | 24546 | CR-1/8-TO-1002-F |
| A2R31 | 0757-0449 | 10 | RESISTOR-FXD 20K 1% .125W F TUBULAR | 24546 | C4-1/8-T0-2002-F |
| A2R32 | 0757-0449 | | RESISTOR-FXD 20K 1% .125W F TUBULAR | 24546 | C4-1/8-T0-2002-F |
| A2R33 | 0698-3274 | | RESISTOR-FXD 10K 1% .125W F TUBULAR | 19701 | MF4C1/8-T9-1002-F |
| A2R34 | 0698-3450 | 1 | RESISTOR-FXD 42.2K 1% .125W F TUBULAR | 16299 | C4-1/8-T0-4222-F |
| A2R35 | 0698-3274 | | RESISTOR-FXD 10K 1% .125W F TUBULAR | 19701 | MF4C1/8-T9-1002-F |
| A2R36 | 0698-3274 | | RESISTOR-FXD 10K 1% .125W F TUBULAR | 19701 | MF4C1/8-T9-1002-F |
| A2R37 | 0698-5542 | | RESISTOR-FXD 20K 1% .125W F TUBULAR | 19701 | MF4C1/8-T9-2002-F |
| A2R38 | 0698-6338 | 1 | RESISTOR-FXD 5K 1% .125W F TUBULAR | 19701 | MF4C1/8-T9-5001-F |
| A2R43 | 0757-0438 | | RESISTOR-FXD 5.11K 1% .125W F TUBULAR | 24546 | C4-1/8-T0-5111-F |
| A2R44 | 0757-0438 | | RESISTOR-FXD 5.11K 1% .125W F TUBULAR | 24546 | C4-1/8-T0-5111-F |
| A2R45 | 0698-0064 | 1 | RESISTOR-FXD 9.31K 1% .125W F TUBULAR | 91637 | CMF-1/8-T1-9311-F |
| A2R46 | 0757-0442 | | RESISTOR-FXD 10K .01 1/8 | 24546 | C4-1/8-TO-1002-F |
| A2R47 | 0757-0442 | | RESISTOR-FXD 10K .01 1/8 | 24546 | C4-1/8-TO-1002-F |
| A2R48 | 0757-0446 | 8 | RESISTOR-FXD 15K 1% .125W F TUBULAR | 24546 | C4-1/8-T0-1502-F |
| A2R49 | 0757-0446 | | RESISTOR-FXD 15K 1% .125W F TUBULAR | 24546 | C4-1/8-T0-1502-F |
| A2R51 | C698-4447 | 2 | RESISTOR-FXD 280 OHM 1% .125W F TUBULAR | 24546 | C4-1/8-T0-280R-F |
| A2R52 | 0757-0427 | | RESISTOR-FXD 1.5K 1% .125W F TUBULAR | 24546 | C4-1/8-T0-1501-F |
| A2R53 | 0698-4447 | | RESISTOR-FXD 280 OHM 1% .125W F TUBULAR | 24546 | C4-1/8-T0-280R-F |
| A2R54 | 0757-0442 | | RESISTOR-FXD 10K 1% .125W F TUBULAR | 24546 | C4-1/8-T0-1002-F |
| A2R55 | C698-4435 | 3 | RESISTOR-FXD 2.49K 1% .125W F TUBULAR | 16299 | C4-1/8-T0-2491-F |
| A2R56 | 0757-0438 | | RESISTOR-FXD 5.11K 1% .125W F TUBULAR | 24546 | C4-1/8-T0-5111-F |
| A2R57 | 0757-0381 | 1 | RESISTOR-FXD 15 OHM 1% .125W F TUBULAR | 30983 | MF4C1/8-T0-15R0-F |
| A2R58 | 0683-0825 | 1 | RESISTOR-FXD 8.2 OHM 5% .25W CC TUBULAR | 01121 | CB82G5 |
| A2R59 | 0757-0438 | | RESISTOR-FXD 5.11K 1% .125W F TUBULAR | 24546 | C4-1/8-T0-5111-F |
| A2R61 | 0757-0438 | | RESISTOR-FXD 5.11K 1% .125W F TUBULAR | 24546 | C4-1/8-T0-5111-F |
| A2R62 | 0757-0416 | | RESISTOR-FXD 511 OHM 1% .125W F TUBULAR | 24546 | C4-1/8-T0-511R-F |
| A2R63 | 0757-0280 | | RESISTOR-FXD 1K 1% .125W F TUBULAR | 24546 | C4-1/8-T0-1001-F |
| A2R64 | 0698-3449 | 2 | RESISTOR-FXD 28.7K 1% .125W F TUBULAR | 16299 | C4-1/8-T0-2872-F |
| A2R65* | 0698-4387 | 6 | RESISTOR-FXD 60.4 OHM 1% .125W F FACTORY SELECTED PART (SEE PARAGRAPH 7-19) | 16299 | C4-1/8-T0-60R4-F |
| A2R66 | C698-4505 | 1 | RESISTOR-FXD 71.5K 1% .125W F TUBULAR | 24546 | C4-1/8-T0-7152-F |
| A2R67 | 0757-0442 | | RESISTOR-FXD 10K 1% .125W F TUBULAR | 24546 | C4-1/8-T0-1002-F |
| A2R68 | C757-0446 | | RESISTOR-FXD 15K 1% .125W F TUBULAR | 24546 | C4-1/8-T0-1502-F |
| A2R69 | 0683-2235 | 4 | RESISTOR-FXD 22K .05 1/4W | 01121 | CB2235 |
| A2R71 | 0757-0416 | | RESISTOR-FXD 511 OHM 1% .125W F TUBULAR | 24546 | C4-1/8-T0-511R-F |
| A2R72 | 0683-4745 | 3 | RESISTOR-FXD 470K .05 1/4W | 01121 | CB4745 |
| A2R73 | 0698-3558 | 5 | RESISTOR-FXD 4.02K 1% .125W F TUBULAR | 16299 | C4-1/8-T0-4021-F |
| A2R74 | 0698-3558 | | RESISTOR-FXD 4.02K 1% .125W F TUBULAR | 16299 | C4-1/8-T0-4021-F |
| A2R75 | 2100-3054 | 1 | RESISTOR,VAR,TRMR 50K OHM 10% C | 32997 | 3006P-1-503 |
| A2R76 | 0698-4486 | 13 | RESISTOR-FXD 24.9K 1% .125W F TUBULAR | 24546 | C4-1/8-T0-2492-F |
| A2R77 | 0757-0280 | | RESISTOR-FXD 1K 1% .125W F TUBULAR | 24546 | C4-1/8-T0-1001-F |
| A2R78 | 0698-4486 | | RESISTOR-FXD 24.9K 1% .125W F TUBULAR | 24546 | C4-1/8-T0-2492-F |
| A2R79 | 0757-0416 | | RESISTOR-FXD 511 OHM 1% .125W F TUBULAR | 24546 | C4-1/8-T0-511R-F |
| A2R81 | 0757-0416 | | RESISTOR-FXD 511 OHM 1% .125W F TUBULAR | 24546 | C4-1/8-T0-511R-F |
| A2R82 | C757-0280 | | RESISTOR-FXD 1K 1% .125W F TUBULAR | 24546 | C4-1/8-T0-1001-F |
| A2R83 | 0757-0280 | | RESISTOR-FXD 1K 1% .125W F TUBULAR | 24546 | C4-1/8-T0-1001-F |
| A2R84 | 0757-0421 | 1 | RESISTOR-FXD 825 OHM 1% .125W F TUBULAR | 24546 | C4-1/8-T0-825R-F |
| A2R85 | 0757-0446 | | RESISTOR-FXD 15K 1% .125W F TUBULAR | 24546 | C4-1/8-T0-1502-F |
| A2R86 | C698-3497 | | RESISTOR-FXD 6.04K 1% .125W F TUBULAR | 16299 | C4-1/8-T0-6041-F |
| A2R87 | 0698-4425 | 1 | RESISTOR-FXD 1.54K 1% .125W F TUBULAR | 16299 | C4-1/8-T0-1541-F |
| A2R88 | 0683-2235 | | RESISTOR-FXD 22K .05 1/4W | 01121 | CB2235 |
| A2R89 | 0683-1045 | | RESISTOR-FXD 100K .05 1/4W | 01121 | CB1045 |
| A2R91 | 0683-1005 | 1 | RESISTOR-FXD 10 .05 1/4W | 01121 | CB1005 |
| A2R92 | 0757-0442 | | RESISTOR-FXD 10K .01 1/8W | 24546 | C4-1/8-TO-1002-F |
| A2R93 | 0698-4484 | 2 | RESISTOR-FXD 19.1K 1% .125W F TUBULAR | 24546 | C4-1/8-T0-1912-F |
| A2R94 | 0757-0430 | | RESISTOR-FXD 2.21K 1% .125W F TUBULAR | 24546 | C4-1/8-T0-2211-F |
| A2R95 | 0683-3925 | 2 | RESISTOR-FXD 3900 .05 | 01121 | CB3925 |
| A2R96 | 0698-4461 | 2 | RESISTOR-FXD 698 OHM 1% .125W F TUBULAR | 24546 | C4-1/8-T0-698R-F |
| A2R97 | 0698-4461 | | RESISTOR-FXD 698 OHM 1% .125W F TUBULAR | 24546 | C4-1/8-T0-698R-F |
| A2R98 | 0757-0458 | 4 | RESISTOR-FXD 51.1K 1% .125W F TUBULAR | 24546 | C4-1/8-T0-5112-F |
| A2R99 | 0683-1015 | 4 | RESISTOR-FXD 100 .05 1/4W | 01121 | CB1015 |
| A2R100 | 2100-3207 | 1 | RESISTOR, VAR, TRMR, 5KOHM 10% C | 28480 | 2100-3207 |
| A2R101 | 0757-0427 | | RESISTOR-FXD 1.5K 1% .125W F TUBULAR | 24546 | C4-1/8-T0-1501-F |
| A2R102 | 0757-0446 | | RESISTOR-FXD 15K 1% .125W F TUBULAR | 24546 | C4-1/8-T0-1502-F |
| A2R103 | 0757-0280 | | RESISTOR-FXD 1K 1% .125W F TUBULAR | 24546 | C4-1/8-T0-1001-F |
| A2R104 | 0698-3488 | 5 | RESISTOR-FXD 442 OHM 1% .125W F TUBULAR | 16299 | C4-1/8-T0-422R-F |
| A2R105 | 0757-0448 | 3 | RESISTOR-FXD 18.2K 1% .125W F TUBULAR | 24546 | C4-1/8-T0-1822-F |
| A2R106 | 0757-0401 | 9 | RESISTOR-FXD 100 OHM 1% .125W F TUBULAR | 24546 | C4-1/8-T0-101-F |

See introduction to this section for ordering information
*Indicates factory selected value

Replaceable Parts

## Table 6-3. Replaceable Parts (Cont'd).

| Reference Designation | HP Part Number | C D | Qty | Description | Mfr Code | Mfr Part Number |
|---|---|---|---|---|---|---|
| A2R107 | C757-0401 | | | RESISTOR-FXD 100 OHM 1% .125W F TUBULAR | 24546 | C4-1/8-T0-101-F |
| A2R108 | 0698-4459 | | 1 | RESISTOR-FXD 634 OHM 1% .125W F TUBULAR | 24546 | C4-1/8-T0-634R-F |
| A2R109 | 0757-0442 | | | RESISTOR-FXD 10K .01 1/8W | 24546 | C4-1/8-T0-1002-F |
| A2R111 | 0683-1015 | | | RESISTOR-FXD 100 .05 1/4W | 01121 | CB1015 |
| A2R112 | 0683-4705 | | 7 | RESISTOR-FXD 47 .05 1/4W | 01121 | CB4705 |
| A2R113 | 2100-3357 | | 1 | RESISTOR, VAR, TRMR, 500KOHM 10% C | 73138 | 72XR504 |
| R114 | 0683-5635 | | 1 | RESISTOR-FXD 56K .05 1/4W | 01121 | CB5635 |
| A2R115 | 0683-2215 | | 1 | RESISTOR-FXD 220 .05 | 01121 | CB2215 |
| A2R116 | 0757-0442 | | | RESISTOR-FXD 10K .01 1/8 | 24546 | C4-1/8-T0-1002-F |
| A2R117 | 0698-3496 | | | RESISTOR-FXD 866 .01 1/8 | 24546 | C4-1/8-T0-866 |
| A2R118 | 8150-3375 | | | JUMPER WIRE ELEC. | 75042 | 8150-3375R-F |
| A2R119 | 0757-0416 | | | RESISTOR-FXD 511 .01 1/8W | 24546 | C4-1/8-T0-511R-F |
| A2U1 | 1826-0043 | | 15 | IC;LIN;OPERATIONAL AMPLIFIER | 27014 | LM307H |
| A2U2 | 1820-1442 | | | IC CNTR SN74LS290N | 01295 | SN74LS290N |
| A2U3 | 1826-0043 | | | IC;LIN;OPERATIONAL AMPLIFIER | 27014 | LM307H |
| A2U4 | 1826-0043 | | | IC;LIN;OPERATIONAL AMPLIFIER | 27014 | LM307H |
| A2U5 | 1820-1442 | | | IC CNTR SN74LS290N | 01295 | SN74LS290N |
| A2U6 | 1820-1112 | | 1 | IC FF SN74LS74AN | 01295 | SN74LS74AN |
| A2U7 | 1820-0427 | | 3 | IC;LIN;MISCELLANEOUS (LINEAR) | 04713 | MC1496G |
| A2U8 | 1820-1442 | | 3 | IC CNTR SN74LS290N | 01295 | SN74LS290N |
| A2U9 | 1820-0058 | | 3 | IC;LIN;OPERATIONAL AMPLIFIER | 07263 | 709HC |
| A2U11 | 1820-1202 | | 1 | IC GATE-DIG SN74LS10N | 01295 | SN74LS10N |
| A2U12 | 1820-1443 | | 1 | TTL CTR 74LS293N | 01295 | SN74LS293N |
| A2U13 | 1820-0475 | | 1 | INTEGRATED CIRCUIT, DGTL, VOLTAGE | 27014 | LM306H |
| A2Y1 | | | 1 | CRYSTAL: NOT FIELD REPLACEABLE (SEE PARAGRAPH 7-25) | | |
| A3 | 03580-66503 | 9 | 1 | BOARD ASSEMBLY-SWEEP | 28480 | 03580-66503 |
| A3C1 | 0180-1743 | 2 | 3 | CAPACITOR-FXD .1UF+-10% 35VDC TA | 56289 | 150D104X9035A2 |
| A3C2 | 0160-2930 | 0 | | CAPACITOR-FXD .01UF +80-20% 100VDC CER | 28480 | 0150-0093 |
| A3C3 | 0180-0197 | 8 | 18 | CAPACITOR-FXD 2.2UF+-10% 20VDC TA | 56289 | 150D225X9020A2 |
| A3C4 | 0150-0050 | 9 | | CAPACITOR-FXD 1000PF +80-20% 1KVDC CER | 28480 | 0150-0050 |
| A3C5 | 0150-0050 | 9 | | CAPACITOR-FXD 1000PF +80-20% 1KVDC CER | 28480 | 0150-0050 |
| A3C6 | 0150-0050 | 9 | | CAPACITOR-FXD 1000PF +80-20% 1KVDC CER | 28480 | 0150-0050 |
| A3C7 | 0180-1701 | 2 | | CAPACITOR-FXD 6.8UF+-20% 6VDC TA | 56289 | 150D685X0006A2 |
| A3C8 | 0150-0050 | 9 | | CAPACITOR-FXD 1000PF +80-20% 1KVDC CER | 28480 | 0150-0050 |
| A3C9 | 0160-2930 | 0 | | CAPACITOR-FXD .01UF +80-20% 100VDC CER | 28480 | 0150-0093 |
| A3C10 | 0160-2150 | 5 | | CAPACITOR-FXD 33PF +-5% 300VDC MICA | 28480 | 0160-2150 |
| A3C11 | 0150-0050 | 9 | | CAPACITOR-FXD 1000PF +80-20% 1KVDC CER | 28480 | 0150-0050 |
| A3C12 | 0180-0197 | 8 | | CAPACITOR-FXD 2.2UF+-10% 20VDC TA | 56289 | 150D225X9020A2 |
| A3C13 | 0160-2150 | 5 | | CAPACITOR-FXD 33PF +-5% 300VDC MICA | 28480 | 0160-2150 |
| A3C14 | 0170-0042 | 1 | 2 | CAPACITOR-FXD .33UF +-5% 100VDC POLYE | 99515 | E1-33A0 |
| A3C15 | 0180-1743 | 2 | | CAPACITOR-FXD .1UF+-10% 35VDC TA | 56289 | 150D104X9035A2 |
| A3C16 | 0160-2611 | 3 | 1 | CAPACITOR-FXD 1UF +-10% 50VDC MET-POLYE | 28480 | 0160-2611 |
| A3C17 | 0160-0168 | 1 | 1 | CAPACITOR-FXD .1UF +-10% 200VDC POLYE | 28480 | 0160-0168 |
| A3C18 | 0150-0050 | 9 | | CAPACITOR-FXD 1000PF +80-20% 1KVDC CER | 28480 | 0150-0050 |
| A3C19 | 0180-0197 | 8 | | CAPACITOR-FXD 2.2UF+-10% 20VDC TA | 56289 | 150D225X9020A2 |
| A3C20 | 0150-0050 | 9 | | CAPACITOR-FXD 1000PF +80-20% 1KVDC CER | 28480 | 0150-0050 |
| A3C21 | 0160-0170 | 5 | 3 | CAPACITOR-FXD .22UF +80-20% 25VDC CER | 28480 | 0160-0170 |
| A3C22 | 0160-0170 | 5 | | CAPACITOR-FXD .22UF +80-20% 25VDC CER | 28480 | 0160-0170 |
| A3C23 | 0160-0170 | 5 | | CAPACITOR-FXD .22UF +80-20% 25VDC CER | 28480 | 0160-0170 |
| A3C24 | 0140-0199 | 6 | | CAPACITOR-FXD 240PF +-5% 300VDC MICA | 72136 | DM15F241J0300WV1CR |
| A3CR1 | 1901-0040 | 1 | | DIODE-SWITCHING 30V 50MA 2NS DO-35 | 28480 | 1901-0040 |
| A3CR2 | 1902-3128 | 4 | 3 | DIODE-ZNR 7.32V 5% DO-35 PD=.4W | 28480 | 1902-3128 |
| A3CR3 | 1910-0016 | 0 | 8 | DIODE-GE 60V 60MA 1US DO-7 | 28480 | 1910-0016 |
| A3CR4 | 1910-0016 | 0 | | DIODE-GE 60V 60MA 1US DO-7 | 28480 | 1910-0016 |
| A3CR5 | 1910-0016 | 0 | | DIODE-GE 60V 60MA 1US DO-7 | 28480 | 1910-0016 |
| A3CR6 | 1901-0040 | 1 | | DIODE-SWITCHING 30V 50MA 2NS DO-35 | 28480 | 1901-0040 |
| A3CR7 | 1901-0040 | 1 | | DIODE-SWITCHING 30V 50MA 2NS DO-35 | 28480 | 1901-0040 |
| A3CR8 | 1901-0040 | 1 | | DIODE-SWITCHING 30V 50MA 2NS DO-35 | 28480 | 1901-0040 |
| A3CR9 | 1901-0040 | 1 | | DIODE-SWITCHING 30V 50MA 2NS DO-35 | 28480 | 1901-0040 |
| A3CR11 | 1901-0040 | 1 | | DIODE-SWITCHING 30V 50MA 2NS DO-35 | 28480 | 1901-0040 |
| A3CR12 | 1910-0016 | 0 | | DIODE-GE 60V 60MA 1US DO-7 | 28480 | 1910-0016 |
| A3CR13 | 1901-0040 | 1 | | DIODE-SWITCHING 30V 50MA 2NS DO-35 | 28480 | 1901-0040 |
| A3CR14 | 1901-0040 | 1 | | DIODE-SWITCHING 30V 50MA 2NS DO-35 | 28480 | 1901-0040 |
| A3CR15 | 1901-0040 | 1 | | DIODE-SWITCHING 30V 50MA 2NS DO-35 | 28480 | 1901-0040 |
| A3CR16 | 1901-0586 | 0 | 1 | DIODE-GEN PRP 30V 25MA TO-72 | 28480 | 1901-0586 |
| A3CR17 | 1902-3182 | 0 | 2 | DIODE-ZNR 12.1V 5% DO-35 PD=.4W | 28480 | 1902-3182 |
| A3CR18 | 1901-0040 | 1 | | DIODE-SWITCHING 30V 50MA 2NS DO-35 | 28480 | 1901-0040 |
| A3CR19 | 1901-0040 | 1 | | DIODE-SWITCHING 30V 50MA 2NS DO-35 | 28480 | 1901-0040 |
| A3CR21 | 1902-3128 | 4 | | DIODE-ZNR 7.32V 5% DO-35 PD=.4W | 28480 | 1902-3128 |
| A3CR22 | 1901-0040 | 1 | | DIODE-SWITCHING 30V 50MA 2NS DO-35 | 28480 | 1901-0040 |
| A3CR23 | 1901-0040 | 1 | | DIODE-SWITCHING 30V 50MA 2NS DO-35 | 28480 | 1901-0040 |
| A3CR24 | 1902-3085 | 2 | 1 | DIODE-ZNR 4.75V 5% DO-35 PD=.4W | 28480 | 1902-3085 |
| A3Q1 | 1855-0237 | 9 | 2 | TRANSISTOR-JFET DUAL N-CHAN D-MODE TO-78 | 28480 | 1855-0237 |
| A3Q2 | 1854-0071 | 7 | | TRANSISTOR NPN SI PD=300MW FT=200MHZ | 28480 | 1854-0071 |
| A3Q3 | 1855-0368 | 7 | 4 | TRANSISTOR J-FET N-CHAN D-MODE TO-72 SI | 28480 | 1855-0368 |
| A3Q4 | 1853-0010 | 2 | | TRANSISTOR PNP SI TO-18 PD=360MW | 28480 | 1853-0010 |
| A3Q5 | 1855-0082 | 2 | 1 | TRANSISTOR J-FET P-CHAN D-MODE SI | 28480 | 1855-0082 |

See introduction to this section for ordering information
*Indicates factory selected value

Replaceable Parts

## Table 6-3. Replaceable Parts (Cont'd).

| Reference Designation | HP Part Number | C D | Qty | Description | Mfr Code | Mfr Part Number |
|---|---|---|---|---|---|---|
| A3Q6 | 1854-0071 | 7 | | TRANSISTOR NPN SI PD=300MW FT=200MHZ | 28480 | 1854-0071 |
| A3Q7 | 1854-0071 | 7 | | TRANSISTOR NPN SI PD=300MW FT=200MHZ | 28480 | 1854-0071 |
| A3Q8 | 1854-0071 | 7 | | TRANSISTOR NPN SI PD=300MW FT=200MHZ | 28480 | 1854-0071 |
| A3Q9 | 1854-0071 | 7 | | TRANSISTOR NPN SI PD=300MW FT=200MHZ | 28480 | 1854-0071 |
| A3Q11 | 1854-0087 | 5 | 8 | TRANSISTOR NPN SI PD=360MW FT=75MHZ | 28480 | 1854-0087 |
| A3Q12 | 1854-0071 | 7 | | TRANSISTOR NPN SI PD=300MW FT=200MHZ | 28480 | 1854-0071 |
| A3Q13 | 1854-0071 | 7 | | TRANSISTOR NPN SI PD=300MW FT=200MHZ | 28480 | 1854-0071 |
| A3Q14 | 1855-0308 | 5 | 1 | TRANSISTOR-JFET DUAL N-CHAN D-MODE SI | 28480 | 1855-0308 |
| A3Q15 | 1855-0386 | 9 | 1 | TRANSISTOR J-FET 2N4392 N-CHAN D-MODE | 04713 | 2N4392 |
| A3Q16 | 1853-0010 | 2 | | TRANSISTOR PNP SI TO-18 PD=360MW | 28480 | 1853-0010 |
| A3Q17 | 1854-0071 | 7 | | TRANSISTOR NPN SI PD=300MW FT=200MHZ | 28480 | 1854-0071 |
| A3Q18 | 1854-0071 | 7 | | TRANSISTOR NPN SI PD=300MW FT=200MHZ | 28480 | 1854-0071 |
| A3Q19 | 1854-0071 | 7 | | TRANSISTOR NPN SI PD=300MW FT=200MHZ | 28480 | 1854-0071 |
| A3Q21 | 1853-0010 | 2 | | TRANSISTOR PNP SI TO-18 PD=360MW | 28480 | 1853-0010 |
| A3Q22 | 1854-0087 | 5 | | TRANSISTOR NPN SI PD=360MW FT=75MHZ | 28480 | 1854-0087 |
| A3Q23 | 1853-0010 | 2 | | TRANSISTOR PNP SI TO-18 PD=360MW | 28480 | 1853-0010 |
| A3Q24 | 1854-0071 | 7 | | TRANSISTOR NPN SI PD=300MW FT=200MHZ | 28480 | 1854-0071 |
| A3Q25 | 1854-0354 | 9 | | TRANSISTOR NPN SI TO-52 PD=360MW | 28480 | 1854-0354 |
| A3Q26 | 1853-0010 | 2 | | TRANSISTOR PNP SI TO-18 PD=360MW | 28480 | 1853-0010 |
| A3Q27 | 1853-0010 | 2 | | TRANSISTOR PNP SI TO-18 PD=360MW | 28480 | 1853-0010 |
| A3Q28 | 1853-0010 | 2 | | TRANSISTOR PNP SI TO-18 PD=360MW | 28480 | 1853-0010 |
| A3Q29 | 1853-0010 | 2 | | TRANSISTOR PNP SI TO-18 PD=360MW | 28480 | 1853-0010 |
| A3C31 | 1853-0010 | 2 | | TRANSISTOR PNP SI TO-18 PD=360MW | 28480 | 1853-0010 |
| A3Q32 | 1855-0368 | 7 | | TRANSISTOR J-FET N-CHAN D-MODE TO-72 SI | 28480 | 1855-0368 |
| A3Q33 | 1855-0453 | 9 | | TRANSISTOR-JFET DUAL N-CHAN D-MODE TO-78 | 28480 | 1855-0237 |
| A3Q34 | 1854-0071 | 7 | | TRANSISTOR NPN SI PD=300MW FT=200MHZ | 28480 | 1854-0071 |
| A3Q35 | 1855-0368 | 7 | | TRANSISTOR J-FET N-CHAN D-MODE TO-72 SI | 28480 | 1855-0368 |
| A3Q36 | 1855-0368 | 7 | | TRANSISTOR J-FET N-CHAN D-MODE TO-72 SI | 28480 | 1855-0368 |
| A3Q37 | 1853-0016 | 8 | 5 | TRANSISTOR PNP SI TO-92 PD=300MW | 28480 | 1853-0016 |
| A3Q38 | 1854-0071 | 7 | | TRANSISTOR NPN SI PD=300MW FT=200MHZ | 28480 | 1854-0071 |
| A3Q39 | 1853-0016 | 8 | | TRANSISTOR PNP SI TO-92 PD=300MW | 28480 | 1853-0016 |
| A3Q41 | 1853-0016 | 8 | | TRANSISTOR PNP SI TO-92 PD=300MW | 28480 | 1853-0016 |
| A3Q42 | 1854-0087 | 5 | | TRANSISTOR NPN SI PD=360MW FT=75MHZ | 28480 | 1854-0087 |
| A3Q43 | 1854-0087 | 5 | | TRANSISTOR NPN SI PD=360MW FT=75MHZ | 28480 | 1854-0087 |
| A3Q44 | 1853-0016 | 8 | | TRANSISTOR PNP SI TO-92 PD=300MW | 28480 | 1853-0016 |
| A3R1 | 0698-4470 | 0 | 2 | RESISTOR 14K 1% .125W F TC=0+-100 | 24546 | C4-1/8-T0-1402-F |
| A3R2 | 0757-0426 | 9 | 3 | RESISTOR 1.3K 1% .125W F TC=0+-100 | 24546 | C4-1/8-T0-1301-F |
| A3R3 | 0698-4479 | 0 | | RESISTOR 14K 1% .125W F TC=0+-100 | 24546 | C4-1/8-T0-1402-F |
| A3R4 | 0757-0272 | 3 | 2 | RESISTOR 52.3K 1% .125W F TC=0+-100 | 24546 | C4-1/8-T0-5232-F |
| A3R5 | 0684-1031 | 9 | | RESISTOR 10K 10% .25W FC TC=-400/+700 | 01121 | CB1031 |
| A3R6 | 0684-5641 | 5 | 3 | RESISTOR 560K 10% .25W FC TC=-800/+900 | 01121 | CB5641 |
| A3R7 | 0684-1041 | 1 | | RESISTOR 100K 10% .25W FC TC=-400/+800 | 01121 | CB1041 |
| A3R8 | 0684-1041 | 1 | | RESISTOR 100K 10% .25W FC TC=-400/+800 | 01121 | CB1041 |
| A3R9 | 0684-3331 | 6 | 12 | RESISTOR 33K 10% .25W FC TC=-400/+800 | 01121 | CB3331 |
| A3R11 | 0757-0457 | 6 | | RESISTOR 47.5K 1% .125W F TC=0+-100 | 24546 | C4-1/8-T0-4752-F |
| A3R12 | 0698-3228 | 9 | | RESISTOR 49.9K 1% .125W F TC=0+-100 | 28480 | 0698-3228 |
| A3R13 | 0698-4486 | 3 | | RESISTOR 24.9K 1% .125W F TC=0+-100 | 24546 | C4-1/8-T0-2492-F |
| A3R14 | 2100-3273 | 1 | 5 | RESISTOR-TRMR 2K 10% C SIDE-ADJ 1-TRN | 28480 | 2100-3273 |
| A3R15 | 0757-0483 | 8 | 2 | RESISTOR 562K 1% .125W F TC=0+-100 | 28480 | 0757-0483 |
| A3R16 | 0683-3325 | 6 | 2 | RESISTOR 3.3M 5% .25W FC TC=-400/+700 | 01121 | CB3325 |
| A3R17 | 0684-4731 | 2 | | RESISTOR 47K 10% .25W FC TC=-400/+800 | 01121 | CB4731 |
| A3R18 | 0684-6831 | 7 | 2 | RESISTOR 68K 10% .25W FC TC=-400/+800 | 01121 | CB6831 |
| A3R19 | 0684-1041 | 1 | | RESISTOR 100K 10% .25W FC TC=-400/+800 | 01121 | CB1041 |
| A3R21 | 0757-0442 | 9 | | RESISTOR 10K 1% .125W F TC=0+-100 | 24546 | C4-1/8-T0-1002-F |
| A3R22 | 0698-4486 | 3 | | RESISTOR 24.9K 1% .125W F TC=0+-100 | 24546 | C4-1/8-T0-2492-F |
| A3R23 | 0684-1061 | 5 | 1 | RESISTOR 10M 10% .25W FC TC=-900/+1100 | 01121 | CB1061 |
| A3R24 | 0757-0442 | 9 | | RESISTOR 10K 1% .125W F TC=0+-100 | 24546 | C4-1/8-T0-1002-F |
| A3R25 | 0757-0442 | 9 | | RESISTOR 10K 1% .125W F TC=0+-100 | 24546 | C4-1/8-T0-1002-F |
| A3R26 | 0684-1041 | 1 | | RESISTOR 100K 10% .25W FC TC=-400/+800 | 01121 | CB1041 |
| A3R27 | 0684-1041 | 1 | | RESISTOR 100K 10% .25W FC TC=-400/+800 | 01121 | CB1041 |
| A3R28 | 0684-1041 | 1 | | RESISTOR 100K 10% .25W FC TC=-400/+800 | 01121 | CB1041 |
| A3R29 | 0698-4484 | 1 | | RESISTOR 19.1K 1% .125W F TC=0+-100 | 24546 | C4-1/8-T0-1912-F |
| A3R31 | 0698-4484 | 1 | | RESISTOR 19.1K 1% .125W F TC=0+-100 | 24546 | C4-1/8-T0-1912-F |
| A3R32 | 0684-1031 | 9 | | RESISTOR 10K 10% .25W FC TC=-400/+700 | 01121 | CB1031 |
| A3R33 | 0698-4489 | 6 | | RESISTOR 28K 1% .125W F TC=0+-100 | 24546 | C4-1/8-T0-2802-F |
| A3R34 | 0684-1011 | 5 | | RESISTOR 100 10% .25W FC TC=-400/+500 | 01121 | CB1011 |
| A3R35 | 0684-1041 | 1 | | RESISTOR 100K 10% .25W FC TC=-400/+800 | 01121 | CB1041 |
| A3R36 | 0684-1041 | 1 | | RESISTOR 100K 10% .25W FC TC=-400/+800 | 01121 | CB1041 |
| A3R37 | 0684-4731 | 2 | | RESISTOR 47K 10% .25W FC TC=-400/+800 | 01121 | CB4731 |
| A3R38 | 0698-2251 | 7 | 1 | RESISTOR 2.2M 10% .25W FC TC=-900/+1100 | 01121 | CB2251 |
| A3R39 | 0684-1041 | 0 | | RESISTOR 100K 1% .125W | 28480 | CB3331 |
| A3R41 | 0684-1531 | 4 | 16 | RESISTOR 15K 10% .25W FC TC=-400/+800 | 01121 | CB1531 |
| A3R42 | 0684-5621 | 1 | 10 | RESISTOR 5.6K 10% .25W FC TC=-400/+700 | 01121 | CB5621 |
| A3R43 | 0684-1041 | 1 | | RESISTOR 100K 10% .25W FC TC=-400/+800 | 01121 | CB1041 |
| A3R44 | 0684-1031 | 9 | | RESISTOR 10K 10% .25W FC TC=-400/+700 | 01121 | CB1031 |
| A3R45 | 0684-1041 | 1 | | RESISTOR 100K 10% .25W FC TC=-400/+800 | 01121 | CB1041 |
| A3R46 | 0684-4731 | 2 | | RESISTOR 47K 10% .25W FC TC=-400/+800 | 01121 | CB4731 |
| A3R47 | 0684-1031 | 9 | | RESISTOR 10K 10% .25W FC TC=-400/+700 | 01121 | CB1031 |
| A3R48 | 0684-1041 | 1 | | RESISTOR 100K 10% .25W FC TC=-400/+800 | 01121 | CB1041 |
| A3R49 | 0684-4731 | 2 | | RESISTOR 47K 10% .25W FC TC=-400/+800 | 01121 | CB4731 |

See introduction to this section for ordering information
*Indicates factory selected value

Replaceable Parts

## Table 6-3. Replaceable Parts (Cont'd).

| Reference Designation | HP Part Number | C D | Qty | Description | Mfr Code | Mfr Part Number |
|---|---|---|---|---|---|---|
| A3R51 | 0684-4731 | 2 | | RESISTOR 47K 10% .25W FC TC=-400/+800 | 01121 | CB4731 |
| A3R52 | 0683-1635 | 7 | 1 | RESISTOR 16K 5% .25W FC TC=-400/+800 | 01121 | CB1635 |
| A3R53 | 0684-1041 | 1 | | RESISTOR 100K 10% .25W FC TC=-400/+800 | 01121 | CB1041 |
| A3R54 | 2100-3273 | 1 | | RESISTOR-TRMR 2K 10% C SIDE-ADJ 1-TRN | 28480 | 2100-3273 |
| A3R55 | 0684-1041 | 1 | | RESISTOR 100K 10% .25W FC TC=-400/+800 | 01121 | CB1041 |
| A3R56 | 0684-4731 | 2 | | RESISTOR 47K 10% .25W FC TC=-400/+800 | 01121 | CB4731 |
| A3R57 | 0684-1041 | 1 | | RESISTOR 100K 10% .25W FC TC=-400/+800 | 01121 | CB1041 |
| A3R58 | 0684-1041 | 1 | | RESISTOR 100K 10% .25W FC TC=-400/+800 | 01121 | CB1041 |
| A3R59 | 0684-1041 | 1 | | RESISTOR 100K 10% .25W FC TC=-400/+800 | 01121 | CB1041 |
| A3R61 | 0684-4731 | 2 | | RESISTOR 47K 10% .25W FC TC=-400/+800 | 01121 | CB4731 |
| A3R62 | 0684-4741 | 4 | | RESISTOR 470K 10% .25W FC TC=-800/+900 | 01121 | CB4741 |
| A3R63 | 0684-4731 | 2 | | RESISTOR 47K 10% .25W FC TC=-400/+800 | 01121 | CB4731 |
| A3R64 | 0684-1041 | 1 | | RESISTOR 100K 10% .25W FC TC=-400/+800 | 01121 | CB1041 |
| A3R65 | 0684-1041 | 1 | | RESISTOR 100K 10% .25W FC TC=-400/+800 | 01121 | CB1041 |
| A3R66 | 0698-5922 | 8 | 1 | RESISTOR 1.8M 1% .5W F TC=0+-100 | 28480 | 0698-5922 |
| A3R67 | 0698-3572 | 6 | 1 | RESISTOR 60.4K 1% .125W F TC=0+-100 | 24546 | C4-1/8-T0-6042-F |
| A3R68 | 0698-3499 | 6 | 5 | RESISTOR 40.2K 1% .125W F TC=0+-100 | 24546 | C4-1/8-T0-4022-F |
| A3R69 | 0757-0449 | 6 | | RESISTOR 20K 1% .125W F TC=0+-100 | 24546 | C4-1/8-T0-2002-F |
| A3R71 | 0757-0449 | 6 | | RESISTOR 20K 1% .125W F TC=0+-100 | 24546 | C4-1/8-T0-2002-F |
| A3R72 | 0757-0426 | 9 | | RESISTOR 1.3K 1% .125W F TC=0+-100 | 24546 | C4-1/8-T0-1301-F |
| A3R73 | 0757-0272 | 3 | | RESISTOR 52.3K 1% .125W F TC=0+-100 | 24546 | C4-1/8-T0-5232-F |
| A3R74 | 0757-0449 | 6 | | RESISTOR 20K 1% .125W F TC=0+-100 | 24546 | C4-1/8-T0-2002-F |
| A3R75 | 0684-1041 | 1 | | RESISTOR 100K 10% .25W FC TC=-400/+800 | 01121 | CB1041 |
| A3R76 | 2100-3357 | 2 | | RESISTOR-TRMR 500K 10% C SIDE-ADJ 1-TRN | 28480 | 2100-3357 |
| A3R77 | 0698-0077 | 0 | 5 | RESISTOR 93.1K 1% .125W F TC=0+-100 | 03888 | PME55-1/8-T0-9312-F |
| A3R78 | 0698-0077 | 0 | | RESISTOR 93.1K 1% .125W F TC=0+-100 | 03888 | PME55-1/8-T0-9312-F |
| A3R79 | 0757-0277 | 8 | 1 | RESISTOR 49.9 1% .125W F TC=0+-100 | 24546 | C4-1/8-T0-49R2-F |
| A3R81 | 0757-0475 | 8 | 1 | RESISTOR 274K 1% .125W F TC=0+-100 | 24546 | C4-1/8-T0-2743-F |
| A3R82 | 0757-0346 | 2 | 2 | RESISTOR 10 1% .125W F TC=0+-100 | 24546 | C4-1/8-T0-10R0-F |
| A3R83 | 0698-4497 | 6 | 1 | RESISTOR 48.7K 1% .125W F TC=0+-100 | 24546 | C4-1/8-T0-4872-F |
| A3R84 | 0684-2231 | 3 | | RESISTOR 22K 10% .25W FC TC=-400/+800 | 01121 | CB2231 |
| A3R85 | 0684-1041 | 1 | | RESISTOR 100K 10% .25W FC TC=-400/+800 | 01121 | CB1041 |
| A3R86 | 0684-1031 | 9 | | RESISTOR 10K 10% .25W FC TC=-400/+700 | 01121 | CB1031 |
| A3R87 | 0698-0077 | 0 | | RESISTOR 93.1K 1% .125W F TC=0+-100 | 03888 | PME55-1/8-T0-9312-F |
| A3R89 | 0684-2231 | 3 | | RESISTOR 22K 10% .25W FC TC=-400/+800 | 01121 | CB2231 |
| A3R91 | 0684-4731 | 2 | | RESISTOR 47K 10% .25W FC TC=-400/+800 | 01121 | CB4731 |
| A3R92 | 0684-1041 | 1 | | RESISTOR 100K 10% .25W FC TC=-400/+800 | 01121 | CB1041 |
| A3R93 | 0684-3331 | 6 | | RESISTOR 33K 10% .25W FC TC=-400/+800 | 01121 | CB3331 |
| A3R94 | 0684-1041 | 1 | | RESISTOR 100K 10% .25W FC TC=-400/+800 | 01121 | CB1041 |
| A3R95 | 0698-3279 | 0 | 6 | RESISTOR 4.99K 1% .125W F TC=0+-100 | 24546 | C4-1/8-T0-4991-F |
| A3R96 | 0684-1041 | 1 | | RESISTOR 100K 10% .25W FC TC=-400/+800 | 01121 | CB1041 |
| A3R97 | 0684-1041 | 1 | | RESISTOR 100K 10% .25W FC TC=-400/+800 | 01121 | CB1041 |
| A3R98 | 0757-0442 | 9 | | RESISTOR 10K 1% .125W F TC=0+-100 | 24546 | C4-1/8-T0-1002-F |
| A3R99 | 0684-2231 | 3 | | RESISTOR 22K 10% .25W FC TC=-400/+800 | 01121 | CB2231 |
| A3R101 | 0684-2231 | 3 | | RESISTOR 22K 10% .25W FC TC=-400/+800 | 01121 | CB2231 |
| A3R102 | 0684-1041 | 1 | | RESISTOR 100K 10% .25W FC TC=-400/+800 | 01121 | CB1041 |
| A3R103 | 0684-1041 | 1 | | RESISTOR 100K 10% .25W FC TC=-400/+800 | 01121 | CB1041 |
| A3R104 | 0684-2231 | 3 | | RESISTOR 22K 10% .25W FC TC=-400/+800 | 01121 | CB2231 |
| A3R105 | 0684-5641 | 5 | | RESISTOR 560K 10% .25W FC TC=-800/+900 | 01121 | CB5641 |
| A3R106 | 0684-1041 | 1 | | RESISTOR 100K 10% .25W FC TC=-400/+800 | 01121 | CB1041 |
| A3R107 | 0684-1041 | 1 | | RESISTOR 100K 10% .25W FC TC=-400/+800 | 01121 | CB1041 |
| A3R108 | 0684-1041 | 1 | | RESISTOR 100K 10% .25W FC TC=-400/+800 | 01121 | CB1041 |
| A3R109 | 0684-1041 | 1 | | RESISTOR 100K 10% .25W FC TC=-400/+800 | 01121 | CB1041 |
| A3R110 | 0698-3279 | 0 | | RESISTOR 4.99K 1% .125W F TC=0+-100 | 24546 | C4-1/8-T0-4991-F |
| A3R112 | 0684-1041 | 1 | | RESISTOR 100K 10% .25W FC TC=-400/+800 | 01121 | CB1041 |
| A3S1 | 3101-1312 | 8 | 1 | SWITCH-SLIDE SPDT NS | 28480 | 3101-1312 |
| A3U1 | 1826-0043 | 4 | | IC OP AMP GP TO-99 | 01928 | CA307T |
| A3U2 | 1820-0223 | 0 | 4 | IC OP AMP GP TO-99 | 04713 | MLM301AG |
| A3U3 | 1826-0043 | 4 | | IC OP AMP GP TO-99 | 01928 | CA307T |
| A3U4 | 1820-0223 | 0 | | IC OP AMP GP TO-99 | 04713 | MLM301AG |
| A3U5 | 1820-1418 | 7 | 1 | IC DCDR TTL LS BCD-TO-DEC 4-TO-10-LINE | 01295 | SN74LS42N |
| A3U6 | 1820-1578 | 6 | 1 | IC FF TTL LS J-K PULSE CLEAR DUAL | 01295 | SN74LS73AN |
| A3U7 | 1820-0598 | 8 | 1 | IC FF TTL L J-K M/S PULSE PRESET/CLEAR | 27014 | DM74L72N |
| A3U8 | 1820-1197 | 9 | 1 | IC GATE TTL LS NAND QUAD 2-INP | 01295 | SN74LS00N |
| A3U9 | 1820-1208 | 9 | 3 | IC GATE TTL LS NAND DUAL 4-INP | 01295 | SN74LS20N |
| A3U11 | 1820-1144 | 6 | 1 | IC GATE TTL LS NOR QUAD 2-INP | 01295 | SN74LS02N |
| A3U12 | 1820-1202 | 7 | | IC GATE TTL LS NAND TPL 3-INP | 01295 | SN74LS10N |
| A3U13 | 1820-1204 | 9 | | IC GATE TTL LS NAND DUAL 8-INP | 01295 | SN74LS20N |
| A3U14 | 1820-1204 | 9 | | IC GATE TTL LS NAND DUAL 8-INP | 01295 | SN74LS20N |
| A3U15 | 1826-0043 | 4 | | IC OP AMP GP TO-99 | 01928 | CA307T |
| A4 | 03581-66504 | 0 | 1 | BOARD ASSEMBLY-DETECTOR | 28480 | 03580-66504 |
| A4C1 | 0180-0210 | 6 | | CAPACITOR-FXD 3.3UF+-20% 15VDC TA | 56289 | 150D335X0015A2 |
| A4C2 | 0180-0210 | 6 | | CAPACITOR-FXD 3.3UF+-20% 15VDC TA | 56289 | 150D335X0015A2 |
| A4C3 | 0150-0093 | 0 | | CAPACITOR-FXD .01UF +80-20% 100VDC CER | 28480 | 0150-0093 |
| A4C4 | 0150-0093 | 0 | | CAPACITOR-FXD .01UF +80-20% 100VDC CER | 28480 | 0150-0093 |
| A4C5 | 0150-0093 | 0 | | CAPACITOR-FXD .01UF +80-20% 100VDC CER | 28480 | 0150-0093 |

See introduction to this section for ordering information
*Indicates factory selected value

## Table 6-3. Replaceable Parts (Cont'd).

| Reference Designation | HP Part Number | C D | Qty | Description | Mfr Code | Mfr Part Number |
|---|---|---|---|---|---|---|
| A4C6 | 0150-0093 | 0 | | CAPACITOR-FXD .01UF +80-20% 100VDC CER | 28480 | 0150-0093 |
| A4C7 | 0150-0093 | 0 | | CAPACITOR-FXD .01UF +80-20% 100VDC CER | 28480 | 0150-0093 |
| A4C8 | 0150-0093 | 0 | | CAPACITOR-FXD .01UF +80-20% 100VDC CER | 28480 | 0150-0093 |
| A4C9 | 0180-1735 | 2 | 1 | CAPACITOR-FXD .22UF+-10% 35VDC TA | 56289 | 150D224X9035A2 |
| A4C11 | 0160-0363 | 8 | 3 | CAPACITOR-FXD 620PF +-5% 300VDC MICA | 28480 | 0160-0363 |
| A4C12 | 0150-0093 | 0 | | CAPACITOR-FXD .01UF +80-20% 100VDC CER | 28480 | 0150-0093 |
| A4C13 | 0140-0159 | 8 | 1 | CAPACITOR-FXD 3000PF +-2% 300VDC MICA | 72136 | DM19F302G0300HV1CR |
| A4C14 | 0150-0093 | 0 | | CAPACITOR-FXD .01UF +80-20% 100VDC CER | 28480 | 0150-0093 |
| A4C15 | 0180-0197 | 8 | | CAPACITOR-FXD 2.2UF+-10% 20VDC TA | 56289 | 150D225X9020A2 |
| A4C16 | 0160-0153 | 4 | 1 | CAPACITOR-FXD 1000PF +-10% 200VDC POLYE | 28480 | 0160-0153 |
| A4C17 | 0160-4557 | 9 | | CAPACITOR-FXD .1UF +80-20% 100VDC CER | 28480 | 0150-0084 |
| A4C18 | 0160-0763 | 2 | 11 | CAPACITOR-FXD 5PF +-10% 500VDC MICA | 28480 | 0160-0763 |
| A4C19 | 0160-2204 | 0 | 8 | CAPACITOR-FXD 100PF +-5% 300VDC MICA | 28480 | 0160-2204 |
| A4C21 | 0160-4557 | 9 | | CAPACITOR-FXD .1UF +80-20% 100VDC CER | 28480 | 0150-0084 |
| A4C22 | | 9 | | CAPACITOR-FXD .1UF +80-20% 100VDC CER | 28480 | 0150-0084 |
| A4C23 | 0160-0763 | 2 | | CAPACITOR-FXD 5PF +-10% 500VDC MICA | 28480 | 0160-0763 |
| A4C24 | 0160-2204 | 0 | | CAPACITOR-FXD 100PF +-5% 300VDC MICA | 28480 | 0160-2204 |
| A4C25 | 0160-4557 | 9 | | CAPACITOR-FXD .1UF +80-20% 100VDC CER | 28480 | 0150-0084 |
| A4C26 | | 9 | | CAPACITOR-FXD .1UF +80-20% 100VDC CER | 28480 | 0150-0084 |
| A4C27 | 0160-0763 | 2 | | CAPACITOR-FXD 5PF +-10% 500VDC MICA | 28480 | 0160-0763 |
| A4C28 | 0160-2204 | 0 | | CAPACITOR-FXD 100PF +-5% 300VDC MICA | 28480 | 0160-2204 |
| A4C29 | 0160-4557 | 9 | | CAPACITOR-FXD .1UF +80-20% 100VDC CER | 28480 | 0150-0084 |
| A4C31 | | 9 | | CAPACITOR-FXD .1UF +80-20% 100VDC CER | 28480 | 0150-0084 |
| A4C32 | 0160-0763 | 2 | | CAPACITOR-FXD 5PF +-10% 500VDC MICA | 28480 | 0160-0763 |
| A4C33 | 0160-2204 | 0 | | CAPACITOR-FXD 100PF +-5% 300VDC MICA | 28480 | 0160-2204 |
| A4C34 | 0160-3094 | 8 | 1 | CAPACITOR-FXD .1UF +-10% 100VDC CER | 28480 | 0160-3094 |
| A4C35 | 0180-0210 | 6 | | CAPACITOR-FXD 3.3UF+-20% 15VDC TA | 56289 | 150D335X0015A2 |
| A4C36 | 0160-2960 | 5 | | CAPACITOR-FXD .05UF +-20% 100VDC CER | 28480 | 0160-2960 |
| A4C37 | 0180-0106 | 9 | | CAPACITOR-FXD 60UF+-20% 6VDC TA | 56289 | 150D606X0006B2 |
| A4C38 | 0180-0197 | 8 | | CAPACITOR-FXD 2.2UF+-10% 20VDC TA | 56289 | 150D225X9020A2 |
| A4C39 | 0160-2605 | 5 | | CAPACITOR-FXD .02UF +80-20% 25VDC CER | 28480 | 0160-2605 |
| A4C41 | 0160-2605 | 5 | | CAPACITOR-FXD .02UF +80-20% 25VDC CER | 28480 | 0160-2605 |
| A4C42 | 0150-0093 | 0 | | CAPACITOR-FXD .01UF +80-20% 100VDC CER | 28480 | 0150-0093 |
| A4C43 | 0160-2204 | 0 | | CAPACITOR-FXD 100PF +-5% 300VDC MICA | 28480 | 0160-2204 |
| A4C44 | 0150-0022 | 5 | | CAPACITOR-FXD 3.3PF +-10% 500VDC TI DIOX | 28480 | 0150-0022 |
| A4C45 | 0150-0093 | 0 | | CAPACITOR-FXD .01UF +80-20% 100VDC CER | 28480 | 0150-0093 |
| A4C46 | 0150-0093 | 0 | | CAPACITOR-FXD .01UF +80-20% 100VDC CER | 28480 | 0150-0093 |
| A4C47 | 0150-0093 | 0 | | CAPACITOR-FXD .01UF +80-20% 100VDC CER | 28480 | 0150-0093 |
| A4C48 | 0150-0093 | 0 | | CAPACITOR-FXD .01UF +80-20% 100VDC CER | 28480 | 0150-0093 |
| A4C49 | 0180-0291 | 3 | 16 | CAPACITOR-FXD 1UF+-10% 35VDC TA | 56289 | 150D105X9035A2 |
| A4C51 | 0180-0291 | 3 | | CAPACITOR-FXD 1UF+-10% 35VDC TA | 56289 | 150D105X9035A2 |
| A4C52 | 0180-0210 | 6 | | CAPACITOR-FXD 3.3UF+-20% 15VDC TA | 56289 | 150D335X0015A2 |
| A4C53 | 0160-2605 | 5 | | CAPACITOR-FXD .02UF +80-20% 25VDC CER | 28480 | 0160-2605 |
| A4C54 | 0160-2204 | 0 | | CAPACITOR-FXD 100PF +-5% 300VDC MICA | 28480 | 0160-2204 |
| A4C55 | 0150-0022 | 5 | | CAPACITOR-FXD 3.3PF +-10% 500VDC TI DIOX | 28480 | 0150-0022 |
| A4C56 | 0180-1743 | 2 | | CAPACITOR-FXD .1UF+-10% 35VDC TA | 56289 | 150D104X9035A2 |
| A4C57 | 0150-0093 | 0 | | CAPACITOR-FXD .01UF +80-20% 100VDC CER | 28480 | 0150-0093 |
| A4C58 | 0150-0093 | 0 | | CAPACITOR-FXD .01UF +80-20% 100VDC CER | 28480 | 0150-0093 |
| A4C59 | 0160-2605 | 5 | | CAPACITOR-FXD .02UF +80-20% 25VDC CER | 28480 | 0160-2605 |
| A4C61 | 0160-2605 | 5 | | CAPACITOR-FXD .02UF +80-20% 25VDC CER | 28480 | 0160-2605 |
| A4C62 | 0160-2960 | 5 | | CAPACITOR-FXD .05UF +-20% 100VDC CER | 28480 | 0160-2960 |
| A4C63 | 0160-0763 | 2 | | CAPACITOR-FXD 5PF +-10% 500VDC MICA | 28480 | 0160-0763 |
| A4C64 | 0160-4557 | 9 | | CAPACITOR-FXD .1UF +80-20% 100VDC CER | 28480 | 0150-0084 |
| A4C65 | 0160-2960 | 5 | | CAPACITOR-FXD .05UF +-20% 100VDC CER | 28480 | 0160-2960 |
| A4C66 | 0160-0154 | 5 | | CAPACITOR-FXD 2200PF +-10% 200VDC POLYE | 28480 | 0160-0154 |
| A4C67 | 0160-0154 | 5 | | CAPACITOR-FXD 2200PF +-10% 200VDC POLYE | 28480 | 0160-0154 |
| A4C68 | 0160-0157 | 8 | 1 | CAPACITOR-FXD 4700PF +-10% 200VDC POLYE | 28480 | 0160-0157 |
| A4C69 | 0140-0198 | 5 | 1 | CAPACITOR-FXD 200PF +-5% 300VDC MICA | 72136 | DM15F201J0300HV1CR |
| A4C70 | 0160-2960 | 5 | | CAPACITOR-FXD .05UF +-20% 100VDC CER | 28480 | 0160-2960 |
| A4C71 | 0180-0197 | 8 | | CAPACITOR-FXD 2.2UF+-10% 20VDC TA | 56289 | 150D225X9020A2 |
| A4C72 | 0180-1746 | 5 | 15 | CAPACITOR-FXD 15UF+-10% 20VDC TA | 56289 | 150D156X9020B2 |
| A4C73 | 0180-1746 | 5 | | CAPACITOR-FXD 15UF+-10% 20VDC TA | 56289 | 150D156X9020B2 |
| A4C74 | 0180-0197 | 8 | | CAPACITOR-FXD 2.2UF+-10% 20VDC TA | 56289 | 150D225X9020A2 |
| A4C75 | 0180-0228 | 6 | | CAPACITOR-FXD 22UF+-10% 15VDC TA | 56289 | 150D226X9015B2 |
| A4C76 | 0180-0197 | 8 | | CAPACITOR-FXD 2.2UF+-10% 20VDC TA | 56289 | 150D225X9020A2 |
| A4C77 | 0180-1746 | 5 | | CAPACITOR-FXD 15UF+-10% 20VDC TA | 56289 | 150D156X9020B2 |
| A4C78 | 0180-1746 | 5 | | CAPACITOR-FXD 15UF+-10% 20VDC TA | 56289 | 150D156X9020B2 |
| A4C79 | 0180-1746 | 5 | | CAPACITOR-FXD 15UF+-10% 20VDC TA | 56289 | 150D156X9020B2 |
| A4C81 | 0180-0197 | 8 | | CAPACITOR-FXD 2.2UF+-10% 20VDC TA | 56289 | 150D225X9020A2 |
| A4C82 | 0180-0228 | 6 | | CAPACITOR-FXD 22UF+-10% 15VDC TA | 56289 | 150D226X9015B2 |
| A4CR1 | 1901-0040 | 1 | | DIODE-SWITCHING 30V 50MA 2NS DO-35 | 28480 | 1901-0040 |
| A4CR2 | 1901-0040 | 1 | | DIODE-SWITCHING 30V 50MA 2NS DO-35 | 28480 | 1901-0040 |
| A4CR3 | 1901-0040 | 1 | | DIODE-SWITCHING 30V 50MA 2NS DO-35 | 28480 | 1901-0040 |
| A4CR4 | 1901-0040 | 1 | | DIODE-SWITCHING 30V 50MA 2NS DO-35 | 28480 | 1901-0040 |
| A4CR5 | 1901-0040 | 1 | | DIODE-SWITCHING 30V 50MA 2NS DO-35 | 28480 | 1901-0040 |

See introduction to this section for ordering information
*Indicates factory selected value

Replaceable Parts

## Table 6-3. Replaceable Parts (Cont'd).

| Reference Designation | HP Part Number | C D | Qty | Description | Mfr Code | Mfr Part Number |
|---|---|---|---|---|---|---|
| A6CR6 | 1901-0040 | 1 | | DIODE-SWITCHING 30V 50MA 2NS DO-35 | 28480 | 1901-0040 |
| A6CR7 | 1901-0040 | 1 | | DIODE-SWITCHING 30V 50MA 2NS DO-35 | 28480 | 1901-0040 |
| A6CR8 | 1901-0040 | 1 | | DIODE-SWITCHING 30V 50MA 2NS DO-35 | 28480 | 1901-0040 |
| A6CR9 | 1901-0040 | 1 | | DIODE-SWITCHING 30V 50MA 2NS DO-35 | 28480 | 1901-0040 |
| A6CR11 | 1901-0040 | 1 | | DIODE-SWITCHING 30V 50MA 2NS DO-35 | 28480 | 1901-0040 |
| A6CR12 | 1901-0040 | 1 | | DIODE-SWITCHING 30V 50MA 2NS DO-35 | 28480 | 1901-0040 |
| A6CR13 | 1901-0179 | 7 | 8 | DIODE-SWITCHING 15V 50MA 750PS DO-7 | 28480 | 1901-0179 |
| A6CR14 | 1901-0179 | 7 | | DIODE-SWITCHING 15V 50MA 750PS DO-7 | 28480 | 1901-0179 |
| A6CR15 | 1901-0179 | 7 | | DIODE-SWITCHING 15V 50MA 750PS DO-7 | 28480 | 1901-0179 |
| A6CR16 | 1901-0179 | 7 | | DIODE-SWITCHING 15V 50MA 750PS DO-7 | 28480 | 1901-0179 |
| A6CR17 | 1901-0179 | 7 | | DIODE-SWITCHING 15V 50MA 750PS DO-7 | 28480 | 1901-0179 |
| A6CR18 | 1901-0179 | 7 | | DIODE-SWITCHING 15V 50MA 750PS DO-7 | 28480 | 1901-0179 |
| A6CR19 | 1901-0179 | 7 | | DIODE-SWITCHING 15V 50MA 750PS DO-7 | 28480 | 1901-0179 |
| A6CR21 | 1901-0179 | 7 | | DIODE-SWITCHING 15V 50MA 750PS DO-7 | 28480 | 1901-0179 |
| A6CR22 | 1901-0040 | 1 | | DIODE-SWITCHING 30V 50MA 2NS DO-35 | 28480 | 1901-0040 |
| A6CR23 | 1901-0040 | 1 | | DIODE-SWITCHING 30V 50MA 2NS DO-35 | 28480 | 1901-0040 |
| A6CR24 | 1901-0040 | 1 | | DIODE-SWITCHING 30V 50MA 2NS DO-35 | 28480 | 1901-0040 |
| A6CR25 | 1901-0040 | 1 | | DIODE-SWITCHING 30V 50MA 2NS DO-35 | 28480 | 1901-0040 |
| A6CR26 | 1901-0040 | 1 | | DIODE-SWITCHING 30V 50MA 2NS DO-35 | 28480 | 1901-0040 |
| A6CR27 | 1901-0040 | 1 | | DIODE-SWITCHING 30V 50MA 2NS DO-35 | 28480 | 1901-0040 |
| A6CR28 | 1901-0040 | 1 | | DIODE-SWITCHING 30V 50MA 2NS DO-35 | 28480 | 1901-0040 |
| A6CR29 | 1902-3128 | 0 | | DIODE-ZNR 7.32V 5% DO-35 PD=.4W | 28480 | 1902-3128 |
| A6CR31 | 1901-0347 | 1 | 2 | DIODE-SCHOTTKY 8V | 28480 | 1901-0347 |
| A6CR32 | 1901-0347 | 1 | | DIODE-SCHOTTKY 8V | 28480 | 1901-0347 |
| A6L1 | 9100-3261 | 4 | 1 | INDUCTORRF-CH-MLD 846UH 5% .8D Q=200 | 28480 | 9100-3261 |
| A6L2 | 9100-0541 | 7 | 4 | INDUCTORRF-CH-MLD 250UH 10% .250X.5LG | 28480 | 9100-0541 |
| A6L3 | 9140-0129 | 1 | 10 | INDUCTORRF-CH-MLD 220UH 5% .166DX.385LG | 28480 | 9140-0129 |
| A6L4 | 9140-0129 | 1 | | INDUCTORRF-CH-MLD 220UH 5% .166DX.385LG | 28480 | 9140-0129 |
| A6L5 | 9140-0129 | 1 | | INDUCTORRF-CH-MLD 220UH 5% .166DX.385LG | 28480 | 9140-0129 |
| A6L6 | 9100-0541 | 7 | | INDUCTORRF-CH-MLD 250UH 10% .250X.5LG | 28480 | 9100-0541 |
| A6L7 | 9140-0129 | 1 | | INDUCTORRF-CH-MLD 220UH 5% .166DX.385LG | 28480 | 9140-0129 |
| A6L8 | 9140-0129 | 1 | | INDUCTORRF-CH-MLD 220UH 5% .166DX.385LG | 28480 | 9140-0129 |
| A6L9 | 9140-0129 | 1 | | INDUCTORRF-CH-MLD 220UH 5% .166DX.385LG | 28480 | 9140-0129 |
| A6L11 | 9140-0129 | 1 | | INDUCTORRF-CH-MLD 220UH 5% .166DX.385LG | 28480 | 9140-0129 |
| A6Q1 | 1854-0071 | 7 | | TRANSISTOR NPN SI PD=300MW FT=200MHZ | 28480 | 1854-0071 |
| A6Q2 | 1854-0071 | 7 | | TRANSISTOR NPN SI PD=300MW FT=200MHZ | 28480 | 1854-0071 |
| A6Q3 | 1854-0071 | 7 | | TRANSISTOR NPN SI PD=300MW FT=200MHZ | 28480 | 1854-0071 |
| A6Q4 | 1853-0010 | 2 | | TRANSISTOR PNP SI TO-18 PD=360MW | 28480 | 1853-0010 |
| A6Q5 | 1854-0071 | 7 | | TRANSISTOR NPN SI PD=300MW FT=200MHZ | 28480 | 1854-0071 |
| A6Q6 | 1853-0010 | 2 | | TRANSISTOR PNP SI TO-18 PD=360MW | 28480 | 1853-0010 |
| A6Q7 | 1854-0071 | 7 | | TRANSISTOR NPN SI PD=300MW FT=200MHZ | 28480 | 1854-0071 |
| A6Q8 | 1854-0071 | 7 | | TRANSISTOR NPN SI PD=300MW FT=200MHZ | 28480 | 1854-0071 |
| A6Q9 | 1854-0071 | 7 | | TRANSISTOR NPN SI PD=300MW FT=200MHZ | 28480 | 1854-0071 |
| A6Q11 | 1854-0071 | 7 | | TRANSISTOR NPN SI PD=300MW FT=200MHZ | 28480 | 1854-0071 |
| A6Q12 | 1854-0071 | 7 | | TRANSISTOR NPN SI PD=300MW FT=200MHZ | 28480 | 1854-0071 |
| A6Q13 | 1854-0071 | 7 | | TRANSISTOR NPN SI PD=300MW FT=200MHZ | 28480 | 1854-0071 |
| A6Q14 | 1854-0071 | 7 | | TRANSISTOR NPN SI PD=300MW FT=200MHZ | 28480 | 1854-0071 |
| A6Q15 | 1854-0071 | 7 | | TRANSISTOR NPN SI PD=300MW FT=200MHZ | 28480 | 1854-0071 |
| A6Q16 | 1853-0010 | 2 | | TRANSISTOR PNP SI TO-18 PD=360MW | 28480 | 1853-0010 |
| A6R1 | 2100-3350 | 5 | 1 | RESISTOR-TRMR 200 10% C SIDE-ADJ 1-TRN | 28480 | 2100-3350 |
| A6R2 | 2100-3349 | 2 | 1 | RESISTOR-TRMR 100 10% C SIDE-ADJ 1-TRN | 28480 | 2100-3349 |
| A6R3 | 2100-3352 | 7 | | RESISTOR-TRMR 1K 10% C SIDE-ADJ 1-TRN | 28480 | 2100-3352 |
| A6R4 | 2100-3352 | 7 | | RESISTOR-TRMR 1K 10% C SIDE-ADJ 1-TRN | 28480 | 2100-3352 |
| A6R5 | 2100-3353 | 8 | 2 | RESISTOR-TRMR 20K 10% C SIDE-ADJ 1-TRN | 32997 | 3386X-T46-203 |
| A6R6 | 2100-3351 | 6 | 1 | RESISTOR-TRMR 500 10% C SIDE-ADJ 1-TRN | 28480 | 2100-3351 |
| A6R7 | 2100-3273 | 1 | | RESISTOR-TRMR 2K 10% C SIDE-ADJ 1-TRN | 28480 | 2100-3273 |
| A6R8 | 2100-3273 | 1 | | RESISTOR-TRMR 2K 10% C SIDE-ADJ 1-TRN | 28480 | 2100-3273 |
| A6R9 | 2100-3354 | 9 | 3 | RESISTOR-TRMR 50K 10% C SIDE-ADJ 1-TRN | 28480 | 2100-3354 |
| A6R10 | 2100-3354 | 9 | | RESISTOR-TRMR 50K 10% C SIDE-ADJ 1-TRN | 28480 | 2100-3354 |
| A6R11 | 2100-3273 | 1 | | RESISTOR-TRMR 2K 10% C SIDE-ADJ 1-TRN | 28480 | 2100-3273 |
| A6R12 | 0757-0449 | 6 | | RESISTOR 20K 1% .125W F TC=0+-100 | 24546 | C4-1/8-T0-2002-F |
| A6R13 | 0757-0449 | 6 | | RESISTOR 20K 1% .125W F TC=0+-100 | 24546 | C4-1/8-T0-2002-F |
| A6R14 | 0757-0274 | 5 | 1 | RESISTOR 1.21K 1% .125W F TC=0+-100 | 24546 | C4-1/8-T0-1213-F |
| A6R15 | 0757-0438 | 3 | | RESISTOR 5.11K 1% .125W F TC=0+-100 | 24546 | C4-1/8-T0-5111-F |
| A6R16 | 0698-3449 | 6 | | RESISTOR 28.7K 1% .125W F TC=0+-100 | 24546 | C4-1/8-T0-2872-F |
| A6R17 | 0698-4436 | 3 | 1 | RESISTOR 2.8K 1% .125W F TC=0+-100 | 24546 | C4-1/8-T0-2801-F |
| A6R18* | 0757-0282 | 5 | 3 | RESISTOR 221 1% .125W F TC=0+-100 | 24546 | C4-1/8-T0-221R-F |
| A6R19 | 0684-1031 | 9 | | RESISTOR 10K 10% .25W FC TC=-400/+700 | 01121 | CB1031 |
| A6R20 | 0684-1031 | 9 | | RESISTOR 10K 10% .25W FC TC=-400/+700 | 01121 | CB1031 |
| A6R21* | 0698-4451 | 0 | 1 | RESISTOR 340 1% .125W F TC=0+-100 | 24546 | C4-1/8-T0-287R-F |
| A6R22 | 0757-0280 | 3 | | RESISTOR 1K 1% .125W F TC=0+-100 | 24546 | C4-1/8-T0-1001-F |
| A6R23 | 0757-0469 | 0 | 4 | RESISTOR 150K 1% .125W F TC=0+-100 | 24546 | C4-1/8-T0-1503-F |
| A6R24 | 0757-0469 | 0 | | RESISTOR 150K 1% .125W F TC=0+-100 | 24546 | C4-1/8-T0-1503-F |
| A6R25 | 0757-0280 | 3 | | RESISTOR 1K 1% .125W F TC=0+-100 | 24546 | C4-1/8-T0-1001-F |

See introduction to this section for ordering information
*Indicates factory selected value

Replaceable Parts

## Table 6-3. Replaceable Parts (Cont'd).

| Reference Designation | HP Part Number | C D | Qty | Description | Mfr Code | Mfr Part Number |
|---|---|---|---|---|---|---|
| A4R26 | 0757-0449 | 6 | | RESISTOR 20K 1% .125W F TC=0+-100 | 24546 | C4-1/8-T0-2002-F |
| A4R27 | 0757-0449 | 6 | | RESISTOR 20K 1% .125W F TC=0+-100 | 24546 | C4-1/8-T0-2002-F |
| A4R28 | 0684-3331 | 6 | | RESISTOR 33K 10% .25W FC TC=-400/+800 | 01121 | CB3331 |
| A4R29 | 0684-1031 | 9 | | RESISTOR 10K 10% .25W FC TC=-400/+700 | 01121 | CB1031 |
| A4R31 | 0684-1031 | 9 | | RESISTOR 10K 10% .25W FC TC=-400/+700 | 01121 | CB1031 |
| A4R32 | 0684-3331 | 6 | | RESISTOR 33K 10% .25W FC TC=-400/+800 | 01121 | CB3331 |
| A4R33 | 0684-1031 | 9 | | RESISTOR 10K 10% .25W FC TC=-400/+700 | 01121 | CB1031 |
| A4R34 | 0684-1031 | 9 | | RESISTOR 10K 10% .25W FC TC=-400/+700 | 01121 | CB1031 |
| A4R35 | 0684-3331 | 6 | | RESISTOR 33K 10% .25W FC TC=-400/+800 | 01121 | CB3331 |
| A4R36 | 0684-3331 | 6 | | RESISTOR 33K 10% .25W FC TC=-400/+800 | 01121 | CB3331 |
| A4R37 | 0684-1831 | 7 | 5 | RESISTOR 18K 10% .25W FC TC=-400/+800 | 01121 | CB1831 |
| A4R38 | 0684-1531 | 4 | | RESISTOR 15K 10% .25W FC TC=-400/+800 | 01121 | CB1531 |
| A4R39 | 0757-0426 | 9 | | RESISTOR 1.3K 1% .125W F TC=0+-100 | 24546 | C4-1/8-T0-1301-F |
| A4R41 | 0757-0394 | 0 | 4 | RESISTOR 51.1 1% .125W F TC=0+-100 | 24546 | C4-1/8-T0-51R1-F |
| A4R42 | 0757-0401 | 0 | | RESISTOR 100 1% .125W F TC=0+-100 | 24546 | C4-1/8-T0-101-F |
| A4R43 | 0698-3888 | 3 | | RESISTOR 442 1% .125W F TC=0+-100 | 24546 | C4-1/8-T0-442R-F |
| A4R44 | 0757-0401 | 0 | | RESISTOR 100 1% .125W F TC=0+-100 | 24546 | C4-1/8-T0-101-F |
| A4R45 | 0757-0401 | 0 | | RESISTOR 100 1% .125W F TC=0+-100 | 24546 | C4-1/8-T0-101-F |
| A4R46 | 0698-4483 | 0 | 5 | RESISTOR 18.7K 1% .125W F TC=0+-100 | 24546 | C4-1/8-T0-1872-F |
| A4R47 | 0757-0465 | 6 | 11 | RESISTOR 100K 1% .125W F TC=0+-100 | 24546 | C4-1/8-T0-1003-F |
| A4R48 | 0698-4483 | 0 | | RESISTOR 18.7K 1% .125W F TC=0+-100 | 24546 | C4-1/8-T0-1872-F |
| A4R49 | 0684-5641 | 5 | | RESISTOR 560K 10% .25W FC TC=-800/+900 | 01121 | CB5641 |
| A4R51 | 0684-1531 | 4 | | RESISTOR 15K 10% .25W FC TC=-400/+800 | 01121 | CB1531 |
| A4R52 | 0683-2225 | 3 | 3 | RESISTOR 2.2M 5% .25W FC TC=-400/+700 | 01121 | CB2225 |
| A4R53 | 0684-1031 | 9 | | RESISTOR 10K 10% .25W FC TC=-400/+700 | 01121 | CB1031 |
| A4R54 | 0684-4731 | 2 | | RESISTOR 47K 10% .25W FC TC=-400/+800 | 01121 | CB4731 |
| A4R55 | 0684-1031 | 9 | | RESISTOR 10K 10% .25W FC TC=-400/+700 | 01121 | CB1031 |
| A4R56 | 0698-4434 | 1 | 1 | RESISTOR 2.32K 1% .125W F TC=0+-100 | 24546 | C4-1/8-T0-2321-F |
| A4R57 | 0757-0346 | 2 | | RESISTOR 10 1% .125W F TC=0+-100 | 24546 | C4-1/8-T0-10R0-F |
| A4R58 | 0757-0280 | 3 | | RESISTOR 1K 1% .125W F TC=0+-100 | 24546 | C4-1/8-T0-1001-F |
| A4R59 | 0757-0273 | 4 | 5 | RESISTOR 3.01K 1% .125W F TC=0+-100 | 24546 | C4-1/8-T0-3011-F |
| A4R62* | 0698-4488 | 5 | 4 | RESISTOR 26.7K 1% .125W F TC=0+-100 | 24546 | C4-1/8-T0-2672-F |
| A4R63 | 0757-0273 | 4 | | RESISTOR 3.01K 1% .125W F TC=0+-100 | 24546 | C4-1/8-T0-3011-F |
| A4R64* | 0698-4488 | 5 | | RESISTOR 26.7K 1% .125W F TC=0+-100 | 24546 | C4-1/8-T0-2672-F |
| A4R65* | 0698-4488 | 5 | | RESISTOR 26.7K 1% .125W F TC=0+-100 | 24546 | C4-1/8-T0-2672-F |
| A4R66 | 0757-0273 | 4 | | RESISTOR 3.01K 1% .125W F TC=0+-100 | 24546 | C4-1/8-T0-3011-F |
| A4R67* | 0698-3245 | 0 | 4 | RESISTOR 20.5K 1% .125W F TC=0+-100 | 24546 | C4-1/8-T0-2052-F |
| A4R68 | 0698-3279 | 0 | | RESISTOR 4.99K 1% .125W F TC=0+-100 | 24546 | C4-1/8-T0-4991-F |
| A4R69 | 0757-0273 | 4 | | RESISTOR 3.01K 1% .125W F TC=0+-100 | 24546 | C4-1/8-T0-3011-F |
| A4R71* | 0698-4482 | 9 | 1 | RESISTOR 17.4K 1% .125W F TC=0+-100 | 03888 | PME55-1/8-T0-1742-F |
| A4R72 | 0698-3558 | 8 | | RESISTOR 4.02K 1% .125W F TC=0+-100 | 24546 | C4-1/8-T0-4021-F |
| A4R73 | 0698-3497 | 4 | | RESISTOR 6.04K 1% .125W F TC=0+-100 | 24546 | C4-1/8-T0-6044-F |
| A4R74 | 0757-0430 | 5 | | RESISTOR 2.21K 1% .125W F TC=0+-100 | 24546 | C4-1/8-T0-2211-F |
| A4R75 | 0698-3224 | 9 | | RESISTOR 49.9K 1% .125W F TC=0+-100 | 28480 | 0698-3224 |
| A4R76 | 0698-3516 | 8 | 6 | RESISTOR 6.34K 1% .125W F TC=0+-100 | 24546 | C4-1/8-T0-6341-F |
| A4R77 | 0757-0438 | 9 | 2 | RESISTOR 3.65K 1% .125W F TC=0+-100 | 24546 | C4-1/8-T0-3651-F |
| A4R78 | 0757-0449 | 6 | | RESISTOR 20K 1% .125W F TC=0+-100 | 24546 | C4-1/8-T0-2002-F |
| A4R79 | 0683-1515 | 2 | 2 | RESISTOR 150 5% .25W FC TC=-400/+600 | 01121 | CB1515 |
| A4R81 | 0683-1515 | 2 | | RESISTOR 150 5% .25W FC TC=-400/+600 | 01121 | CB1515 |
| A4R82 | 0757-0442 | 9 | | RESISTOR 10K 1% .125W F TC=0+-100 | 24546 | C4-1/8-T0-1002-F |
| A4R83* | 0698-4403 | 4 | 1 | RESISTOR 102 1% .125W F TC=0+-100 | 24546 | C4-1/8-T0-102R-F |
| A4R84 | 0684-3331 | 6 | | RESISTOR 33K 10% .25W FC TC=-400/+800 | 01121 | CB3331 |
| A4R85 | 0684-3331 | 6 | | RESISTOR 33K 10% .25W FC TC=-400/+800 | 01121 | CB3331 |
| A4R86 | 0757-0465 | 6 | | RESISTOR 100K 1% .125W F TC=0+-100 | 24546 | C4-1/8-T0-1003-F |
| A4R87 | 0757-0427 | 0 | | RESISTOR 1.5K 1% .125W F TC=0+-100 | 24546 | C4-1/8-T0-1501-F |
| A4R88 | 0698-3557 | 7 | 2 | RESISTOR 806 1% .125W F TC=0+-100 | 24546 | C4-1/8-T0-806R-F |
| A4R89 | 0757-0465 | 6 | | RESISTOR 100K 1% .125W F TC=0+-100 | 24546 | C4-1/8-T0-1003-F |
| A4R91 | 0757-0449 | 6 | | RESISTOR 20K 1% .125W F TC=0+-100 | 24546 | C4-1/8-T0-2002-F |
| A4R92 | 0684-3331 | 6 | | RESISTOR 33K 10% .25W FC TC=-400/+800 | 01121 | CB3331 |
| A4R93 | 0684-3331 | 6 | | RESISTOR 33K 10% .25W FC TC=-400/+800 | 01121 | CB3331 |
| A4R94 | 0684-4741 | 4 | | RESISTOR 470K 10% .25W FC TC=-800/+900 | 01121 | CB4741 |
| A4R95 | 0684-4741 | 4 | | RESISTOR 470K 10% .25W FC TC=-800/+900 | 01121 | CB4741 |
| A4R96 | 0684-1041 | 1 | | RESISTOR 100K 10% .25W FC TC=-400/+800 | 01121 | CB1041 |
| A4R97 | 0684-3331 | 6 | | RESISTOR 33K 10% .25W FC TC=-400/+800 | 01121 | CB3331 |
| A4R98 | 0757-0442 | 9 | | RESISTOR 10K 1% .125W F TC=0+-100 | 24546 | C4-1/8-T0-1002-F |
| A4R99 | 0757-0442 | 9 | | RESISTOR 10K 1% .125W F TC=0+-100 | 24546 | C4-1/8-T0-1002-F |
| A4R101 | 0757-0442 | 9 | | RESISTOR 10K 1% .125W F TC=0+-100 | 24546 | C4-1/8-T0-1002-F |
| A4R102 | 0698-4475 | 0 | 1 | RESISTOR 9.76K 1% .125W F TC=0+-100 | 03888 | PME55-1/8-T0-9761-F |
| A4R103* | 0698-4442 | 1 | 1 | RESISTOR 4.42K 1% .125W F TC=0+-100 | 24546 | C4-1/8-T0-4421-F |
| A4R104* | 0698-4466 | 9 | 1 | RESISTOR 976 1% .125W F TC=0+-100 | 24546 | C4-1/8-T0-976R-F |
| A4R105* | 0698-3441 | 2 | 1 | RESISTOR 215 1% .125W F TC=0+-100 | 24546 | C4-1/8-T0-210R-F |
| A4R106 | 0757-0401 | 0 | | RESISTOR 100 1% .125W F TC=0+-100 | 24546 | C4-1/8-T0-101-F |
| A4R107 | 0757-0465 | 6 | | RESISTOR 100K 1% .125W F TC=0+-100 | 24546 | C4-1/8-T0-1003-F |
| A4R108 | 0698-4435 | 2 | | RESISTOR 2.49K 1% .125W F TC=0+-100 | 24546 | C4-1/8-T0-2491-F |
| A4R109* | 0698-4429 | 4 | 1 | RESISTOR 1.87K 1% .125W F TC=0+-100 | 24546 | C4-1/8-T0-1871-F |

See introduction to this section for ordering information
*Indicates factory selected value

Replaceable Parts

## Table 6-3. Replaceable Parts (Cont'd).

| Reference Designation | HP Part Number | C D | Qty | Description | Mfr Code | Mfr Part Number |
|---|---|---|---|---|---|---|
| AAR111 | 0698-3279 | 0 | | RESISTOR 4.99K 1% .125W F TC=0+-100 | 24546 | C4-1/8-T0-4991-F |
| AAR112 | 0684-2241 | 5 | 1 | RESISTOR 220K 10% .25W FC TC=-800/+900 | 01121 | CB2241 |
| AAR113 | 0757-0465 | 6 | | RESISTOR 100K 1% .125W F TC=0+-100 | 24546 | C4-1/8-T0-1003-F |
| AAR114 | 0757-0446 | 3 | | RESISTOR 15K 1% .125W F TC=0+-100 | 24546 | C4-1/8-T0-1502-F |
| AAR115 | 0757-0427 | 0 | | RESISTOR 1.5K 1% .125W F TC=0+-100 | 24546 | C4-1/8-T0-1501-F |
| AAR116 | 0757-0407 | 6 | | RESISTOR 200 1% .125W F TC=0+-100 | 24546 | C4-1/8-T0-201-F |
| AAR117 | 0684-1531 | 4 | | RESISTOR 15K 10% .25W FC TC=-400/+800 | 01121 | CB1531 |
| AAR118 | 0684-1031 | 9 | | RESISTOR 10K 10% .25W FC TC=-400/+700 | 01121 | CB1031 |
| AAR119 | 0684-3341 | 8 | 1 | RESISTOR 330K 10% .25W FC TC=-800/+900 | 01121 | CB3341 |
| AAR120 | 0684-4721 | 0 | | RESISTOR 4.7K 10% .25W FC TC=-400/+700 | 01121 | CB4721 |
| AAR121 | 0698-3499 | 6 | | RESISTOR 40.2K 1% .125W F TC=0+-100 | 24546 | C4-1/8-T0-4022-F |
| AAR122A | 0698-4509 | 1 | 2 | RESISTOR 80.6K 1% .125W F TC=0+-100 | 24546 | C4-1/8-T0-8062-F |
| A4R122B | 0757-0465 | 7 | 1 | RESISTOR 100K 1% .125W F TC=0+-100 | 03888 | PME55-1/8-T0-9762-F |
| AAR123 | 0698-4539 | 7 | 1 | RESISTOR 402K 1% .125W F TC=0+-100 | 28480 | 0698-4539 |
| AAR124 | 0757-0442 | 9 | | RESISTOR 10K 1% .125W F TC=0+-100 | 24546 | C4-1/8-T0-1002-F |
| AAR125 | 0757-0280 | 3 | | RESISTOR 1K 1% .125W F TC=0+-100 | 24546 | C4-1/8-T0-1001-F |
| AAR126 | 0757-0449 | 6 | | RESISTOR 20K 1% .125W F TC=0+-100 | 24546 | C4-1/8-T0-2002-F |
| AAR127 | 0757-0449 | 6 | | RESISTOR 20K 1% .125W F TC=0+-100 | 24546 | C4-1/8-T0-2002-F |
| AAR128 | 0757-0280 | 3 | | RESISTOR 1K 1% .125W F TC=0+-100 | 24546 | C4-1/8-T0-1001-F |
| AAR129 | 0757-0280 | 3 | | RESISTOR 1K 1% .125W F TC=0+-100 | 24546 | C4-1/8-T0-1001-F |
| AAR130 | 0698-3499 | 6 | | RESISTOR 40.2K 1% .125W F TC=0+-100 | 24546 | C4-1/8-T0-4022-F |
| AAR131 | 0698-3499 | 6 | | RESISTOR 40.2K 1% .125W F TC=0+-100 | 24546 | C4-1/8-T0-4022-F |
| AAR132 | 0698-4473 | 8 | 4 | RESISTOR 8.06K 1% .125W F TC=0+-100 | 24546 | C4-1/8-T0-8061-F |
| AAR133 | 0757-0458 | 7 | | RESISTOR 51.1K 1% .125W F TC=0+-100 | 24546 | C4-1/8-T0-5112-F |
| AAR134 | 0698-3279 | 0 | | RESISTOR 4.99K 1% .125W F TC=0+-100 | 24546 | C4-1/8-T0-4991-F |
| AAR135 | 0757-0317 | 7 | 1 | RESISTOR 1.33K 1% .125W F TC=0+-100 | 24546 | C4-1/8-T0-1331-F |
| AAR136 | 0698-3264 | 3 | 1 | RESISTOR 11.8K 1% .125W F TC=0+-100 | 24546 | C4-1/8-T0-1182-F |
| AAR137 | 0757-0280 | 3 | | RESISTOR 1K 1% .125W F TC=0+-100 | 24546 | C4-1/8-T0-1001-F |
| AAR138 | 0757-0438 | 3 | | RESISTOR 5.11K 1% .125W F TC=0+-100 | 24546 | C4-1/8-T0-5111-F |
| AAR139 | 0757-0288 | 1 | 1 | RESISTOR 9.09K 1% .125W F TC=0+-100 | 19701 | MFAC1/8-T0-9091-F |
| AAR140 | 0698-4484 | 1 | | RESISTOR 19.1K 1% .125W F TC=0+-100 | 24546 | C4-1/8-T0-1912-F |
| AAR141 | 0757-0453 | 2 | 2 | RESISTOR 30.1K 1% .125W F TC=0+-100 | 24546 | C4-1/8-T0-3012-F |
| AAR142 | 0757-0458 | 7 | | RESISTOR 51.1K 1% .125W F TC=0+-100 | 24546 | C4-1/8-T0-5112-F |
| AAR143 | 0757-0439 | 4 | 1 | RESISTOR 6.81K 1% .125W F TC=0+-100 | 24546 | C4-1/8-T0-6811-F |
| AAR144 | 0698-3268 | 7 | 5 | RESISTOR 11.5K 1% .125W F TC=0+-100 | 24546 | C4-1/8-T0-1152-F |
| AAR145 | 0757-0438 | 3 | | RESISTOR 5.11K 1% .125W F TC=0+-100 | 24546 | C4-1/8-T0-5111-F |
| AAR146 | 0684-6831 | 7 | | RESISTOR 68K 10% .25W FC TC=-400/+800 | 01121 | CB6831 |
| AAR147 | 0684-5621 | 1 | | RESISTOR 5.6K 10% .25W FC TC=-400/+700 | 01121 | CB5621 |
| AAR148 | 0698-4307 | 7 | 1 | RESISTOR 14.3K 1% .125W F TC=0+-100 | 24546 | C4-1/8-T0-1432-F |
| AAR149 | 0757-0444 | 1 | 1 | RESISTOR 12.1K 1% .125W F TC=0+-100 | 24546 | C4-1/8-T0-1212-F |
| AAR150 | 0684-1531 | 4 | | RESISTOR 15K 10% .25W FC TC=-400/+800 | 01121 | CB1531 |
| AART1 | 0837-0050 | 5 | 1 | THERMISTOR DISC 1K-OHM TC=-4.4%/C-DEG | 28480 | 0837-0050 |
| AAU1 | 1826-0109 | 3 | 4 | IC OP AMP W8 TO-99 | 34371 | MA2-2625-80593 |
| AAU2 | 1826-0109 | 3 | | IC OP AMP W8 TO-99 | 34371 | MA2-2625-80593 |
| AAU3 | 1826-0109 | 3 | | IC OP AMP W8 TO-99 | 34371 | MA2-2625-80593 |
| AAU4 | 1826-0109 | 3 | | IC OP AMP W8 TO-99 | 34371 | MA2-2625-80593 |
| AAU5 | 1813-0017 | 5 | 1 | LOGIC AMPLIFIER | 28480 | 1813-0017 |
| AAU6 | 1820-0058 | 9 | | IC OP AMP GP TO-99 | 24046 | TOA 2709V |
| AAU7 | 1820-0058 | 9 | | IC OP AMP GP TO-99 | 24046 | TOA 2709V |
| AAU8 | 1826-0043 | 4 | | IC OP AMP GP TO-99 | 01928 | CA307T |
| AAU9 | 1826-0043 | 4 | | IC OP AMP GP TO-99 | 01928 | CA307T |
| AAU10 | 1826-0043 | 4 | | IC OP AMP GP TO-99 | 01928 | CA307T |
| AAU11 | 1826-0043 | 4 | | IC OP AMP GP TO-99 | 01928 | CA307T |
| A5 | 03580-66505 | 1 | 1 | BOARD ASSEMBLY-IF FILTER | 28480 | 03580-66505 |
| A5[2] | 03580-69515 | | | KIT:BOARD ASSY:IF FILTER | 28480 | 03580-69515 |
| A5[3] | 03580-69505 | | | REBUILT EXCHANGE ASSEMBLY | 28480 | 03580-69505 |
| ASC1 | 0121-0426 | 2 | | CAPACITOR-V TRMR-MICA 50-380PF 175V | 72136 | T52517-7 |
| ASC2 | 0121-0059 | 7 | 5 | CAPACITOR-V TRMR-CER 2-8PF 350V PC-MTG | 52763 | 304324 2/8PF NPO |
| ASC3 | 0121-0105 | 4 | 5 | CAPACITOR-V TRMR-CER 9-35PF 200V PC-MTG | 52763 | 304324 9/35PF N650 |
| ASC4 | 0121-0426 | 2 | | CAPACITOR-V TRMR-MICA 50-380PF 175V | 72136 | T52517-7 |
| ASC5 | 0121-0059 | 7 | | CAPACITOR-V TRMR-CER 2-8PF 350V PC-MTG | 52763 | 304324 2/8PF NPO |
| ASC6 | 0121-0105 | 4 | | CAPACITOR-V TRMR-CER 9-35PF 200V PC-MTG | 52763 | 304324 9/35PF N650 |
| ASC7 | 0121-0426 | 2 | | CAPACITOR-V TRMR-MICA 50-380PF 175V | 72136 | T52517-7 |
| ASC8 | 0121-0059 | 7 | | CAPACITOR-V TRMR-CER 2-8PF 350V PC-MTG | 52763 | 304324 2/8PF NPO |
| ASC9 | 0121-0105 | 4 | | CAPACITOR-V TRMR-CER 9-35PF 200V PC-MTG | 52763 | 304324 9/35PF N650 |
| ASC10 | 0121-0426 | 2 | | CAPACITOR-V TRMR-MICA 50-380PF 175V | 72136 | T52517-7 |
| ASC11 | 0121-0059 | 7 | | CAPACITOR-V TRMR-CER 2-8PF 350V PC-MTG | 52763 | 304324 2/8PF NPO |
| ASC12 | 0121-0105 | 4 | | CAPACITOR-V TRMR-CER 9-35PF 200V PC-MTG | 52763 | 304324 9/35PF N650 |
| ASC13 | 0121-0426 | 2 | | CAPACITOR-V TRMR-MICA 50-380PF 175V | 72136 | T52517-7 |
| ASC14 | 0121-0059 | 7 | | CAPACITOR-V TRMR-CER 2-8PF 350V PC-MTG | 52763 | 304324 2/8PF NPO |
| ASC15 | 0121-0105 | 4 | | CAPACITOR-V TRMR-CER 9-35PF 200V PC-MTG | 52763 | 304324 9/35PF N650 |
| ASC17 | 0140-0200 | 0 | | CAPACITOR-FXD 30PF +-5% 300VDC MICA | 72136 | DM15F300J0300WV1CR |
| ASC18 | 0160-0763 | 2 | | CAPACITOR-FXD 5PF +-10% 500VDC MICA | 28480 | 0160-0763 |
| ASC19 | 0140-0218 | 0 | 5 | CAPACITOR-FXD 160PF +-2% 300VDC MICA | 72136 | DM15F161G0300WV1CR |
| ASC21 | 0160-5269 | 5 | | CAPACITOR-FXD .047UF ±20% 100VDC CER | 28480 | 0160-5269 |
| ASC22 | 0160-2605 | 5 | | CAPACITOR-FXD .02UF +80-20% 25VDC CER | 28480 | 0160-2605 |

[2]KIT INCLUDES NEW A5 (IF FILTER) ASS'Y AND MATCHED CRYSTAL FOR REPLACING A2Y1 (SEE PARAGRAPH 7-25).
[3]EXCHANGE KIT INCLUDES REBUILT A5 (IF FILTER) BOARD AND MATCHED CRYSTAL FOR REPLACING A2Y1 (SEE PARAGRAPH 7-25).

See introduction to this section for ordering information
*Indicates factory selected value

## Table 6-3. Replaceable Parts (Cont'd).

| Reference Designation | HP Part Number | C D | Qty | Description | Mfr Code | Mfr Part Number |
|---|---|---|---|---|---|---|
| A5C23 | 0180-0291 | 3 | | CAPACITOR-FXD 1UF+-10% 35VDC TA | 56289 | 150D105X9035A2 |
| A5C25 | 0150-0093 | 0 | | CAPACITOR-FXD .01UF +80-20% 100VDC CER | 28480 | 0150-0093 |
| A5C26 | 0160-2605 | 5 | | CAPACITOR-FXD .02UF +80-20% 25VDC CER | 28480 | 0160-2605 |
| A5C27 | 0160-5269 | 5 | | CAPACITOR-FXD .047UF ±20% 100VDC CER | 28480 | 0160-5269 |
| A5C28 | 0140-0200 | 0 | | CAPACITOR-FXD 390PF +-5% 300VDC MICA | 72136 | DM15F391J0300MV1CR |
| A5C29 | 0160-0763 | 2 | | CAPACITOR-FXD 5PF +-10% 500VDC MICA | 28480 | 0160-0763 |
| A5C31 | 0140-0218 | 0 | | CAPACITOR-FXD 160PF +-2% 300VDC MICA | 72136 | DM15F161G0300MV1CR |
| A5C32 | 0160-3960 | 7 | 1 | CAPACITOR-FXD 1000PF +-20% 8KVDC | 28480 | 0160-3960 |
| A5C33 | 0160-2605 | 5 | | CAPACITOR-FXD .02UF +80-20% 25VDC CER | 28480 | 0160-2605 |
| A5C34 | 0180-0291 | 3 | | CAPACITOR-FXD 1UF+-10% 35VDC TA | 56289 | 150D105X9035A2 |
| A5C36 | 0150-0093 | 0 | | CAPACITOR-FXD .01UF +80-20% 100VDC CER | 28480 | 0150-0093 |
| A5C37 | 0160-2605 | 5 | | CAPACITOR-FXD .02UF +80-20% 25VDC CER | 28480 | 0160-2605 |
| A5C38 | 0160-5269 | 5 | | CAPACITOR-FXD .047UF ±20% 100VDC CER | 28480 | 0160-5269 |
| A5C39 | 0140-0200 | 0 | | CAPACITOR-FXD 390PF +-5% 300VDC MICA | 72136 | DM15F391J0300MV1CR |
| A5C41 | 0160-0763 | 2 | | CAPACITOR-FXD 5PF +-10% 500VDC MICA | 28480 | 0160-0763 |
| A5C42 | 0140-0218 | 0 | | CAPACITOR-FXD 160PF +-2% 300VDC MICA | 72136 | DM15F161G0300MV1CR |
| A5C43 | 0160-52[illegible] | 5 | | CAPACITOR-FXD .047UF ±20% 100VDC CER | 28480 | 0160-5269 |
| A5C44 | 0160-2605 | 5 | | CAPACITOR-FXD .02UF +80-20% 25VDC CER | 28480 | 0160-2605 |
| A5C45 | 0180-0291 | 3 | | CAPACITOR-FXD 1UF+-10% 35VDC TA | 56289 | 150D105X9035A2 |
| A5C47 | 0150-0093 | 0 | | CAPACITOR-FXD .01UF +80-20% 100VDC CER | 28480 | 0150-0093 |
| A5C48 | 0160-2605 | 5 | | CAPACITOR-FXD .02UF +80-20% 25VDC CER | 28480 | 0160-2605 |
| A5C49 | 0160-5269 | 5 | | CAPACITOR-FXD .047UF ±20% 100VDC CER | 28480 | 0160-5269 |
| A5C51 | 0140-0200 | 0 | | CAPACITOR-FXD 390PF +-5% 300VDC MICA | 72136 | DM15F391J0300MV1CR |
| A5C52 | 0160-0763 | 2 | | CAPACITOR-FXD 5PF +-10% 500VDC MICA | 28480 | 0160-0763 |
| A5C53 | 0140-0218 | 0 | | CAPACITOR-FXD 160PF +-2% 300VDC MICA | 72136 | DM15F161G0300MV1CR |
| A5C54 | 0160-5269 | 5 | | CAPACITOR-FXD .047UF ±20% 100VDC CER | 28480 | 0160-5269 |
| A5C55 | 0160-2605 | 5 | | CAPACITOR-FXD .02UF +80-20% 25VDC CER | 28480 | 0160-2605 |
| A5C56 | 0180-0291 | 3 | | CAPACITOR-FXD 1UF+-10% 35VDC TA | 56289 | 150D105X9035A2 |
| A5C58 | 0150-0093 | 0 | | CAPACITOR-FXD .01UF +80-20% 100VDC CER | 28480 | 0150-0093 |
| A5C59 | 0160-2605 | 5 | | CAPACITOR-FXD .02UF +80-20% 25VDC CER | 28480 | 0160-2605 |
| A5C61 | 0160-5269 | 5 | | CAPACITOR-FXD .047UF ±20% 100VDC CER | 28480 | 0160-5269 |
| A5C62 | 0140-0200 | 0 | | CAPACITOR-FXD 390PF +-5% 300VDC MICA | 72136 | DM15F391J0300MV1CR |
| A5C63 | 0160-0763 | 2 | | CAPACITOR-FXD 5PF +-10% 500VDC MICA | 28480 | 0160-0763 |
| A5C64 | 0140-0218 | 0 | | CAPACITOR-FXD 160PF +-2% 300VDC MICA | 72136 | DM15F161G0300MV1CR |
| A5C65 | 0160-5269 | 5 | | CAPACITOR-FXD .047UF ±20% 100VDC CER | 28480 | 0160-5269 |
| A5C66 | 0160-0195 | 4 | 1 | CAPACITOR-FXD 1000PF +-20% 250VAC(RMS) | 28480 | 0160-0195 |
| A5C67 | 0180-0291 | 3 | | CAPACITOR-FXD 1UF+-10% 35VDC TA | 56289 | 150D105X9035A2 |
| A5C68 | 0180-0291 | 3 | | CAPACITOR-FXD 1UF+-10% 35VDC TA | 56289 | 150D105X9035A2 |
| A5C69 | 0150-0093 | 0 | | CAPACITOR-FXD .01UF +80-20% 100VDC CER | 28480 | 0150-0093 |
| A5C71 | 0150-0093 | 0 | | CAPACITOR-FXD .01UF +80-20% 100VDC CER | 28480 | 0150-0093 |
| A5C72 | 0160-2605 | 5 | | CAPACITOR-FXD .02UF +80-20% 25VDC CER | 28480 | 0160-2605 |
| A5C73 | 0160-5269 | 5 | | CAPACITOR-FXD .047UF ±20% 100VDC CER | 28480 | 0160-5269 |
| A5C74 | 0160-2605 | 5 | | CAPACITOR-FXD .02UF +80-20% 25VDC CER | 28480 | 0160-2605 |
| A5C75 | 0160-5269 | 5 | | CAPACITOR-FXD .047UF ±20% 100VDC CER | 28480 | 0160-5269 |
| A5C76 | 0160-5269 | 5 | | CAPACITOR-FXD .047UF ±20% 100VDC CER | 28480 | 0160-5269 |
| A5C77 | 0160-5269 | 5 | | CAPACITOR-FXD .047UF ±20% 100VDC CER | 28480 | 0160-5269 |
| A5C78 | 0180-0061 | 5 | | CAPACITOR-FXD 100UF+75-10% 16VDC AL | 56289 | 30D107G016DC2 |
| A5C79 | 0180-0061 | 5 | | CAPACITOR-FXD 100UF+75-10% 16VDC AL | 56289 | 30D107G016DC2 |
| A5C81 | 0180-0061 | 5 | | CAPACITOR-FXD 100UF+75-10% 16VDC AL | 56289 | 30D107G016DC2 |
| A5C82 | 0180-0061 | 5 | | CAPACITOR-FXD 100UF+75-10% 16VDC AL | 56289 | 30D107G016DC2 |
| A5CR1 | 1901-0040 | 1 | | DIODE-SWITCHING 30V 50MA 2NS DO-35 | 28480 | 1901-0040 |
| A5CR2 | 1901-0040 | 1 | | DIODE-SWITCHING 30V 50MA 2NS DO-35 | 28480 | 1901-0040 |
| A5CR3 | 1901-0040 | 1 | | DIODE-SWITCHING 30V 50MA 2NS DO-35 | 28480 | 1901-0040 |
| A5CR4 | 1901-0040 | 1 | | DIODE-SWITCHING 30V 50MA 2NS DO-35 | 28480 | 1901-0040 |
| A5CR5 | 1901-0040 | 1 | | DIODE-SWITCHING 30V 50MA 2NS DO-35 | 28480 | 1901-0040 |
| A5CR6 | 1901-0040 | 1 | | DIODE-SWITCHING 30V 50MA 2NS DO-35 | 28480 | 1901-0040 |
| A5CR7 | 1901-0040 | 1 | | DIODE-SWITCHING 30V 50MA 2NS DO-35 | 28480 | 1901-0040 |
| A5CR8 | 1901-0040 | 1 | | DIODE-SWITCHING 30V 50MA 2NS DO-35 | 28480 | 1901-0040 |
| A5CR9 | 1901-0040 | 1 | | DIODE-SWITCHING 30V 50MA 2NS DO-35 | 28480 | 1901-0040 |
| A5CR11 | 1901-0040 | 1 | | DIODE-SWITCHING 30V 50MA 2NS DO-35 | 28480 | 1901-0040 |
| A5CR12 | 1901-0040 | 1 | | DIODE-SWITCHING 30V 50MA 2NS DO-35 | 28480 | 1901-0040 |
| A5CR13 | 1901-0040 | 1 | | DIODE-SWITCHING 30V 50MA 2NS DO-35 | 28480 | 1901-0040 |
| A5CR14 | 1901-0040 | 1 | | DIODE-SWITCHING 30V 50MA 2NS DO-35 | 28480 | 1901-0040 |
| A5CR15 | 1901-0040 | 1 | | DIODE-SWITCHING 30V 50MA 2NS DO-35 | 28480 | 1901-0040 |
| A5CR16 | 1901-0040 | 1 | | DIODE-SWITCHING 30V 50MA 2NS DO-35 | 28480 | 1901-0040 |
| A5CR17 | 1901-0040 | 1 | | DIODE-SWITCHING 30V 50MA 2NS DO-35 | 28480 | 1901-0040 |
| A5CR18 | 1901-0040 | 1 | | DIODE-SWITCHING 30V 50MA 2NS DO-35 | 28480 | 1901-0040 |
| A5CR19 | 1901-0040 | 1 | | DIODE-SWITCHING 30V 50MA 2NS DO-35 | 28480 | 1901-0040 |
| A5CR21 | 1901-0040 | 1 | | DIODE-SWITCHING 30V 50MA 2NS DO-35 | 28480 | 1901-0040 |
| A5CR22 | 1901-0040 | 1 | | DIODE-SWITCHING 30V 50MA 2NS DO-35 | 28480 | 1901-0040 |
| A5CR23 | 1901-0040 | 1 | | DIODE-SWITCHING 30V 50MA 2NS DO-35 | 28480 | 1901-0040 |
| A5CR24 | 1901-0040 | 1 | | DIODE-SWITCHING 30V 50MA 2NS DO-35 | 28480 | 1901-0040 |
| A5CR25 | 1901-0040 | 1 | | DIODE-SWITCHING 30V 50MA 2NS DO-35 | 28480 | 1901-0040 |
| A5CR26 | 1901-0040 | 1 | | DIODE-SWITCHING 30V 50MA 2NS DO-35 | 28480 | 1901-0040 |
| A5CR27 | 1901-0040 | 1 | | DIODE-SWITCHING 30V 50MA 2NS DO-35 | 28480 | 1901-0040 |

See introduction to this section for ordering information
*Indicates factory selected value

Replaceable Parts

## Table 6-3. Replaceable Parts (Cont'd).

| Reference Designation | HP Part Number | C D | Qty | Description | Mfr Code | Mfr Part Number |
|---|---|---|---|---|---|---|
| A5CR28 | 1901-0040 | 1 | | DIODE-SWITCHING 30V 50MA 2NS DO-35 | 28480 | 1901-0040 |
| A5CR29 | 1901-0040 | 1 | | DIODE-SWITCHING 30V 50MA 2NS DO-35 | 28480 | 1901-0040 |
| A5CR31 | 1901-0040 | 1 | | DIODE-SWITCHING 30V 50MA 2NS DO-35 | 28480 | 1901-0040 |
| A5CR32 | 1901-0040 | 1 | | DIODE-SWITCHING 30V 50MA 2NS DO-35 | 28480 | 1901-0040 |
| A5L1 | 9100-3276 | 1 | 5 | INDUCTORRF-CH-MLD 10MH 2% .62D Q=100 | 28480 | 9100-3276 |
| A5L2 | 9100-3276 | 1 | | INDUCTORRF-CH-MLD 10MH 2% .62D Q=100 | 28480 | 9100-3276 |
| A5L3 | 9100-3276 | 1 | | INDUCTORRF-CH-MLD 10MH 2% .62D Q=100 | 28480 | 9100-3276 |
| A5L4 | 9100-3276 | 1 | | INDUCTORRF-CH-MLD 10MH 2% .62D Q=100 | 28480 | 9100-3276 |
| A5L5 | 9100-3276 | 1 | | INDUCTORRF-CH-MLD 10MH 2% .62D Q=100 | 28480 | 9100-3276 |
| A5L6 | 9140-0137 | 1 | | INDUCTORRF-CH-MLD 1MH 5% .2DX.45LG Q=60 | 28480 | 9140-0137 |
| A5L7 | 9140-0137 | 1 | | INDUCTORRF-CH-MLD 1MH 5% .2DX.45LG Q=60 | 28480 | 9140-0137 |
| A5Q1 | 1855-0081 | 1 | | TRANSISTOR J-FET N-CHAN D-MODE SI | 01295 | 2N5245 |
| A5Q2 | 1853-0010 | 2 | | TRANSISTOR PNP SI TO-18 PD=360MW | 28480 | 1853-0010 |
| A5Q3 | 1854-0071 | 7 | | TRANSISTOR NPN SI PD=300MW FT=200MHZ | 28480 | 1854-0071 |
| A5Q4 | 1854-0071 | 7 | | TRANSISTOR NPN SI PD=300MW FT=200MHZ | 28480 | 1854-0071 |
| A5Q5 | 1855-0081 | 1 | | TRANSISTOR J-FET N-CHAN D-MODE SI | 01295 | 2N5245 |
| A5Q6 | 1853-0010 | 2 | | TRANSISTOR PNP SI TO-18 PD=360MW | 28480 | 1853-0010 |
| A5Q7 | 1854-0071 | 7 | | TRANSISTOR NPN SI PD=300MW FT=200MHZ | 28480 | 1854-0071 |
| A5Q8 | 1854-0071 | 7 | | TRANSISTOR NPN SI PD=300MW FT=200MHZ | 28480 | 1854-0071 |
| A5Q9 | 1855-0081 | 1 | | TRANSISTOR J-FET N-CHAN D-MODE SI | 01295 | 2N5245 |
| A5Q11 | 1853-0010 | 2 | | TRANSISTOR PNP SI TO-18 PD=360MW | 28480 | 1853-0010 |
| A5Q12 | 1854-0071 | 7 | | TRANSISTOR NPN SI PD=300MW FT=200MHZ | 28480 | 1854-0071 |
| A5Q13 | 1854-0071 | 7 | | TRANSISTOR NPN SI PD=300MW FT=200MHZ | 28480 | 1854-0071 |
| A5Q14 | 1855-0081 | 1 | | TRANSISTOR J-FET N-CHAN D-MODE SI | 01295 | 2N5245 |
| A5Q15 | 1853-0010 | 2 | | TRANSISTOR PNP SI TO-18 PD=360MW | 28480 | 1853-0010 |
| A5Q16 | 1854-0071 | 7 | | TRANSISTOR NPN SI PD=300MW FT=200MHZ | 28480 | 1854-0071 |
| A5Q17 | 1854-0071 | 7 | | TRANSISTOR NPN SI PD=300MW FT=200MHZ | 28480 | 1854-0071 |
| A5Q18 | 1854-0226 | 4 | 6 | TRANSISTOR NPN 2N3866 SI TO-18 PD=500MW | 13606 | 2N3866 |
| A5Q19 | 1853-0010 | 2 | | TRANSISTOR PNP SI TO-18 PD=360MW | 28480 | 1853-0010 |
| A5Q21 | 1854-0071 | 7 | | TRANSISTOR NPN SI PD=300MW FT=200MHZ | 28480 | 1854-0071 |
| A5Q22 | 1854-0071 | 7 | | TRANSISTOR NPN SI PD=300MW FT=200MHZ | 28480 | 1854-0071 |
| A5R | 0837-0086 | 7 | 1 | THERMISTOR DISC 200-OHM TC=-4.4%/C-DEG | 28480 | 0837-0086 |
| A5R1* | 0698-999P | 9 | | RESISTOR-PAD VALUE | 28480 | 0698-999P |
| A5R2 | 0698-4399 | 7 | 5 | RESISTOR 88.7 1% .125W F TC=0+-100 | 24546 | C4-1/8-T0-88R7-F |
| A5R3 | 0698-4517 | 1 | 5 | RESISTOR 127K 1% .125W F TC=0+-100 | 24546 | C4-1/8-T0-1273-F |
| A5R4 | 0698-4486 | 3 | | RESISTOR 24.9K 1% .125W F TC=0+-100 | 24546 | C4-1/8-T0-2492-F |
| A5R5 | 0698-3382 | 6 | 5 | RESISTOR 5.49K 1% .125W F TC=0+-100 | 24546 | C4-1/8-T0-5491-F |
| A5R6 | 0757-0283 | 6 | 13 | RESISTOR 2K 1% .125W F TC=0+-100 | 24546 | C4-1/8-T0-2001-F |
| A5R7 | 0698-4481 | 8 | | RESISTOR 16.5K 1% .125W F TC=0+-100 | 24546 | C4-1/8-T0-1652-F |
| A5R8 | 0684-1041 | 1 | | RESISTOR 100K 10% .25W FC TC=-400/+800 | 01121 | CB1041 |
| A5R9 | 0757-0460 | 1 | 5 | RESISTOR 61.9K 1% .125W F TC=0+-100 | 24546 | C4-1/8-T0-6192-F |
| A5R10 | 0684-1531 | 4 | | RESISTOR 15K 10% .25W FC TC=-400/+800 | 01121 | CB1531 |
| A5R11 | 0757-0445 | 2 | 5 | RESISTOR 13K 1% .125W F TC=0+-100 | 24546 | C4-1/8-T0-1302-F |
| A5R12 | 0698-4481 | 0 | 7 | RESISTOR 3.74K 1% .125W F TC=0+-100 | 24546 | C4-1/8-T0-3741-F |
| A5R13 | 0698-3495 | 2 | 6 | RESISTOR 866 1% .125W F TC=0+-100 | 24546 | C4-1/8-T0-866R-F |
| A5R14 | 0757-0403 | 2 | 5 | RESISTOR 121 1% .125W F TC=0+-100 | 24546 | C4-1/8-T0-121R-F |
| A5R15 | 0698-3516 | 8 | | RESISTOR 6.34K 1% .125W F TC=0+-100 | 24546 | C4-1/8-T0-6341-F |
| A5R16 | 0698-4462 | 5 | 5 | RESISTOR 768 1% .125W F TC=0+-100 | 24546 | C4-1/8-T0-768R-F |
| A5R17 | 0684-2731 | 8 | 11 | RESISTOR 27K 10% .25W FC TC=-400/+800 | 01121 | CB2731 |
| A5R18 | 0684-2731 | 8 | | RESISTOR 27K 10% .25W FC TC=-400/+800 | 01121 | CB2731 |
| A5R19 | 0684-1531 | 4 | | RESISTOR 15K 10% .25W FC TC=-400/+800 | 01121 | CB1531 |
| A5R21 | 0684-1531 | 4 | | RESISTOR 15K 10% .25W FC TC=-400/+800 | 01121 | CB1531 |
| A5R22 | 0684-1041 | 1 | | RESISTOR 100K 10% .25W FC TC=-400/+800 | 01121 | CB1041 |
| A5R23 | 0683-1025 | 9 | 8 | RESISTOR 1K 5% .25W FC TC=-400/+600 | 01121 | CB1025 |
| A5R24 | 0683-1025 | 9 | | RESISTOR 1K 5% .25W FC TC=-400/+600 | 01121 | CB1025 |
| A5R25 | 0683-1025 | 9 | | RESISTOR 1K 5% .25W FC TC=-400/+600 | 01121 | CB1025 |
| A5R27 | 0698-4399 | 7 | | RESISTOR 88.7 1% .125W F TC=0+-100 | 24546 | C4-1/8-T0-88R7-F |
| A5R28 | 0698-4517 | 1 | | RESISTOR 127K 1% .125W F TC=0+-100 | 24546 | C4-1/8-T0-1273-F |
| A5R29 | 0698-4486 | 3 | | RESISTOR 24.9K 1% .125W F TC=0+-100 | 24546 | C4-1/8-T0-2492-F |
| A5R31 | 0698-3382 | 6 | | RESISTOR 5.49K 1% .125W F TC=0+-100 | 24546 | C4-1/8-T0-5491-F |
| A5R32 | 0757-0283 | 6 | | RESISTOR 2K 1% .125W F TC=0+-100 | 24546 | C4-1/8-T0-2001-F |
| A5R33 | 0698-4481 | 8 | | RESISTOR 16.5K 1% .125W F TC=0+-100 | 24546 | C4-1/8-T0-1652-F |
| A5R34 | 0684-1041 | 1 | | RESISTOR 100K 10% .25W FC TC=-400/+800 | 01121 | CB1041 |
| A5R35 | 0757-0460 | 1 | | RESISTOR 61.9K 1% .125W F TC=0+-100 | 24546 | C4-1/8-T0-6192-F |
| A5R36 | 0757-0445 | 2 | | RESISTOR 13K 1% .125W F TC=0+-100 | 24546 | C4-1/8-T0-1302-F |
| A5R37 | 0698-4481 | 0 | | RESISTOR 3.74K 1% .125W F TC=0+-100 | 24546 | C4-1/8-T0-3741-F |
| A5R38 | 0698-3495 | 2 | | RESISTOR 866 1% .125W F TC=0+-100 | 24546 | C4-1/8-T0-866R-F |
| A5R39 | 0757-0403 | 2 | | RESISTOR 121 1% .125W F TC=0+-100 | 24546 | C4-1/8-T0-121R-F |
| A5R41 | 0698-3516 | 8 | | RESISTOR 6.34K 1% .125W F TC=0+-100 | 24546 | C4-1/8-T0-6341-F |
| A5R42 | 0698-4462 | 5 | | RESISTOR 768 1% .125W F TC=0+-100 | 24546 | C4-1/8-T0-768R-F |
| A5R43 | 0684-2731 | 8 | | RESISTOR 27K 10% .25W FC TC=-400/+800 | 01121 | CB2731 |
| A5R44 | 0684-2731 | 8 | | RESISTOR 27K 10% .25W FC TC=-400/+800 | 01121 | CB2731 |
| A5R45 | 0684-1531 | 4 | | RESISTOR 15K 10% .25W FC TC=-400/+800 | 01121 | CB1531 |
| A5R46 | 0684-1531 | 4 | | RESISTOR 15K 10% .25W FC TC=-400/+800 | 01121 | CB1531 |
| A5R47 | 0684-1041 | 1 | | RESISTOR 100K 10% .25W FC TC=-400/+800 | 01121 | CB1041 |
| A5R49 | 0698-4399 | 7 | | RESISTOR 88.7 1% .125W F TC=0+-100 | 24546 | C4-1/8-T0-88R7-F |

See introduction to this section for ordering information
*Indicates factory selected value

## Table 6-3. Replaceable Parts (Cont'd).

| Reference Designation | HP Part Number | C D | Qty | Description | Mfr Code | Mfr Part Number |
|---|---|---|---|---|---|---|
| A6R6 | 0757-0282 | 5 | | RESISTOR 221 1% .125W F TC=0+-100 | 24546 | C4-1/8-T0-221R-F |
| A6R7 | 0757-0388 | 2 | 2 | RESISTOR 30.1 1% .125W F TC=0+-100 | 24546 | C4-1/8-T0-30R1-F |
| A6R8 | 0698-3559 | 9 | 1 | RESISTOR 3.9 10% .5W CC TC=0+412 | 01121 | EB39G1 |
| A6R9 | 0757-0388 | 2 | | RESISTOR 30.1 1% .125W F TC=0+-100 | 24546 | C4-1/8-T0-30R1-F |
| A6R11 | 0698-0001 | 0 | 1 | RESISTOR 4.7 5% .5W CC TC=0+412 | 01121 | EB4765 |
| A6R12 | 0757-0433 | 8 | | RESISTOR 3.32K 1% .125W F TC=0+-100 | 24546 | C4-1/8-T0-3321-F |
| A6R13 | 0698-4308 | 8 | | RESISTOR 16.9K 1% .125W F TC=0+-100 | 24546 | C4-1/8-T0-1692-F |
| A6R14 | 0757-0438 | 3 | | RESISTOR 5.11K 1% .125W F TC=0+-100 | 24546 | C4-1/8-T0-5111-F |
| A6R15 | 0698-4123 | 5 | | RESISTOR 499 1% .125W F TC=0+-100 | 24546 | C4-1/8-T0-499R-F |
| A6R16 | 0757-0465 | 6 | | RESISTOR 100K 1% .125W F TC=0+-100 | 24546 | C4-1/8-T0-1003-F |
| A6R17 | 0757-0442 | 9 | | RESISTOR 10K 1% .125W F TC=0+-100 | 24546 | C4-1/8-T0-1002-F |
| A6R18 | 0757-0442 | 9 | | RESISTOR 10K 1% .125W F TC=0+-100 | 24546 | C4-1/8-T0-1002-F |
| A6R19 | 0686-3315 | 0 | 2 | RESISTOR 330 5% .5W CC TC=0+529 | 01121 | EB3315 |
| A6R21 | 0757-0469 | 0 | | RESISTOR 150K 1% .125W F TC=0+-100 | 24546 | C4-1/8-T0-1503-F |
| A6R22 | 0757-0458 | 7 | | RESISTOR 51.1K 1% .125W F TC=0+-100 | 24546 | C4-1/8-T0-5112-F |
| A6R23 | 0686-3315 | 0 | | RESISTOR 330 5% .5W CC TC=0+529 | 01121 | EB3315 |
| A6R24 | 0757-0465 | 6 | | RESISTOR 100K 1% .125W F TC=0+-100 | 24546 | C4-1/8-T0-1003-F |
| A6R25 | 0698-3488 | 3 | | RESISTOR 442 1% .125W F TC=0+-100 | 24546 | C4-1/8-T0-442R-F |
| A6R26 | 0698-4435 | 2 | | RESISTOR 2.49K 1% .125W F TC=0+-100 | 24546 | C4-1/8-T0-2491-F |
| A6R27 | 0698-3499 | 0 | | RESISTOR 40.2K 1% .125W F TC=0+-100 | 24546 | C4-1/8-T0-4022-F |
| A6R28 | 0757-0283 | 6 | | RESISTOR 2K 1% .125W F TC=0+-100 | 24546 | C4-1/8-T0-2001-F |
| A6R29 | 0698-3558 | 8 | | RESISTOR 4.02K 1% .125W F TC=0+-100 | 24546 | C4-1/8-T0-4021-F |
| A6R31 | 0757-0161 | 9 | 6 | RESISTOR 604 1% .125W F TC=0+-100 | 24546 | C4-1/8-T0-604R-F |
| A6R32 | 0811-3069 | 8 | 2 | RESISTOR 1 5% .5W PW TC=0+-150 | 75042 | BW20-1-1R0-J |
| A6R33 | 0698-4123 | 5 | | RESISTOR 499 1% .125W F TC=0+-100 | 24546 | C4-1/8-T0-499R-F |
| A6R34 | 0757-0283 | 6 | | RESISTOR 2K 1% .125W F TC=0+-100 | 24546 | C4-1/8-T0-2001-F |
| A6R35 | 0698-3245 | 0 | | RESISTOR 20.5K 1% .125W F TC=0+-100 | 24546 | C4-1/8-T0-2052-F |
| A6R36 | 0757-0442 | 9 | | RESISTOR 10K 1% .125W F TC=0+-100 | 24546 | C4-1/8-T0-1002-F |
| A6R37 | 0698-3245 | 0 | | RESISTOR 20.5K 1% .125W F TC=0+-100 | 24546 | C4-1/8-T0-2052-F |
| A6R38 | 0698-5323 | 9 | 1 | RESISTOR 0K .5% .125W F TC=0+-50 | 28480 | 0698-5323 |
| A6R39 | 0698-6846 | 3 | 1 | RESISTOR 5.42K .5% .125W F TC=0+-50 | 24546 | NC55-1/8-T2-5421-D |
| A6R41* | 0698-0998 | 9 | | RESISTOR-FXD PAD VALUE | 28480 | 0698-0998 |
| A6R42 | 0698-3279 | 0 | | RESISTOR 4.99K 1% .125W F TC=0+-100 | 24546 | C4-1/8-T0-4991-F |
| A6R43 | 0698-4509 | 1 | | RESISTOR 80.6K 1% .125W F TC=0+-100 | 24546 | C4-1/8-T0-8062-F |
| A6R44 | 0757-0283 | 6 | | RESISTOR 2K 1% .125W F TC=0+-100 | 24546 | C4-1/8-T0-2001-F |
| A6R45 | 0698-3558 | 8 | | RESISTOR 4.02K 1% .125W F TC=0+-100 | 24546 | C4-1/8-T0-4021-F |
| A6R46 | 0757-0161 | 9 | | RESISTOR 604 1% .125W F TC=0+-100 | 24546 | C4-1/8-T0-604R-F |
| A6R47 | 0698-4123 | 5 | | RESISTOR 499 1% .125W F TC=0+-100 | 24546 | C4-1/8-T0-499R-F |
| A6R48 | 0811-3069 | 8 | | RESISTOR 1 5% .5W PW TC=0+-150 | 75042 | BW20-1-1R0-J |
| A6R49 | 0698-3245 | 0 | | RESISTOR 20.5K 1% .125W F TC=0+-100 | 24546 | C4-1/8-T0-2052-F |
| A6R51 | 0757-0283 | 6 | | RESISTOR 2K 1% .125W F TC=0+-100 | 24546 | C4-1/8-T0-2001-F |
| A6R52 | 0698-3193 | 7 | 5 | RESISTOR 10K .25% .125W F TC=0+-50 | 28480 | 0698-3193 |
| A6R53 | 0698-3193 | 7 | | RESISTOR 10K .25% .125W F TC=0+-50 | 28480 | 0698-3193 |
| A6U1 | 1820-0223 | 0 | | IC OP AMP GP TO-99 | 04713 | MLM301AG |
| A6U2 | 1820-0223 | 0 | | IC OP AMP GP TO-99 | 04713 | MLM301AG |
| A6U3 | 1826-0393 | 7 | 1 | IC V RGLTR TO-220 | 27014 | LM317T |
| A6U4 | 1826-0527 | 9 | 1 | IC 337 V RGLTR TO-220 | 27014 | LM337T |
| A7 | 03580-66507 | 3 | 1 | BOARD ASSEMBLY-LOGIC | 28480 | 03580-66507 |
| A7 | 03580-69507 | | | REBUILT EXCHANGE ASSEMBLY | 28480 | 03580-69507 |
| A7C1 | 0180-0291 | 3 | | CAPACITOR-FXD 1UF+-10% 35VDC TA | 56289 | 150D105X9035A2 |
| A7C2 | 0160-2530 | 5 | 1 | CAPACITOR-FXD 180PF +-2% 300VDC MICA | 28480 | 0160-2530 |
| A7C3 | 0160-2012 | 8 | 1 | CAPACITOR-FXD 330PF +-5% 500VDC MICA | 28480 | 0160-2012 |
| A7C4 | 0160-0127 | 2 | 2 | CAPACITOR-FXD 1UF +-20% 25VDC CER | 28480 | 0160-0127 |
| A7C5 | 0160-0297 | 7 | 1 | CAPACITOR-FXD 1200PF +-10% 200VDC POLYE | 28480 | 0160-0297 |
| A7C6 | 0180-1746 | 5 | | CAPACITOR-FXD 15UF+-10% 20VDC TA | 56289 | 150D156X9020B2 |
| A7C7 | 0160-0127 | 2 | | CAPACITOR-FXD 1UF +-20% 25VDC CER | 28480 | 0160-0127 |
| A7C8 | 0180-0229 | 7 | 3 | CAPACITOR-FXD 33UF+-10% 10VDC TA | 56289 | 150D336X9010B2 |
| A7C9 | 0180-1746 | 5 | | CAPACITOR-FXD 15UF+-10% 20VDC TA | 56289 | 150D156X9020B2 |
| A7CR1 | 1902-0551 | 1 | 2 | DIODE-ZNR 6.19V 5% DO-15 PD=1W TC=+.022% | 28480 | 1902-0551 |
| A7CR2 | 1902-0551 | 1 | | DIODE-ZNR 6.19V 5% DO-15 PD=1W TC=+.022% | 28480 | 1902-0551 |
| A7L1 | 9100-0541 | 7 | | INDUCTORRF-CM-MLD 250UH 10% .25DX.5LG | 28480 | 9100-0541 |
| A7L2 | 9140-0129 | 1 | | INDUCTORRF-CM-MLD 220UH 5% .100DX.385LG | 28480 | 9140-0129 |
| A7L3 | 9100-0541 | 7 | | INDUCTORRF-CM-MLD 250UH 10% .25DX.5LG | 28480 | 9100-0541 |
| A7Q1 | 1854-0071 | 7 | | TRANSISTOR NPN SI PD=300MW FT=200MHZ | 28480 | 1854-0071 |
| A7Q2 | 1853-0010 | 2 | | TRANSISTOR PNP SI TO-18 PD=360MW | 28480 | 1853-0010 |
| A7Q3 | 1854-0071 | 7 | | TRANSISTOR NPN SI PD=300MW FT=200MHZ | 28480 | 1854-0071 |
| A7Q4 | 1853-0010 | 2 | | TRANSISTOR PNP SI TO-18 PD=360MW | 28480 | 1853-0010 |
| A7Q5 | 1854-0071 | 7 | | TRANSISTOR NPN SI PD=300MW FT=200MHZ | 28480 | 1854-0071 |
| A7Q6 | 1853-0010 | 2 | | TRANSISTOR PNP SI TO-18 PD=360MW | 28480 | 1853-0010 |
| A7Q7 | 1854-0071 | 7 | | TRANSISTOR NPN SI PD=300MW FT=200MHZ | 28480 | 1854-0071 |
| A7Q8 | 1853-0010 | 2 | | TRANSISTOR PNP SI TO-18 PD=360MW | 28480 | 1853-0010 |
| A7Q9 | 1853-0010 | 2 | | TRANSISTOR PNP SI TO-18 PD=360MW | 28480 | 1853-0010 |
| A7Q11 | 1854-0071 | 7 | | TRANSISTOR NPN SI PD=300MW FT=200MHZ | 28480 | 1854-0071 |

See introduction to this section for ordering information
*Indicates factory selected value

Replaceable Parts

## Table 6-3. Replaceable Parts (Cont'd).

| Reference Designation | HP Part Number | C D | Qty | Description | Mfr Code | Mfr Part Number |
|---|---|---|---|---|---|---|
| A7Q12 | 1854-0071 | 7 | | TRANSISTOR NPN SI PD=300MW FT=200MHZ | 28480 | 1854-0071 |
| A7Q13 | 1853-0012 | 4 | 1 | TRANSISTOR PNP 2N2904A SI TO-39 PD=600MW | 01295 | 2N2904A |
| A7Q14 | 1854-0039 | 7 | 1 | TRANSISTOR NPN 2N30538 SI TO-39 PD=1W | 01928 | 2N30538 |
| A7R1 | 0684-1031 | 9 | | RESISTOR 10K 10% .25W FC TC=-400/+700 | 01121 | CB1031 |
| A7R2 | 0684-3931 | 2 | 7 | RESISTOR 39K 10% .25W FC TC=-400/+800 | 01121 | CB3931 |
| A7R3 | 0757-0465 | 6 | | RESISTOR 100K 1% .125W F TC=0+-100 | 24546 | C4-1/8-T0-1003-F |
| A7R4 | 0698-0077 | 0 | | RESISTOR 93.1K 1% .125W F TC=0+-100 | 03888 | PME55-1/8-T0-9312-F |
| A7R5 | 0698-3228 | 9 | | RESISTOR 49.9K 1% .125W F TC=0+-100 | 28480 | 0698-3228 |
| A7R6 | 0698-0077 | 0 | | RESISTOR 93.1K 1% .125W F TC=0+-100 | 03888 | PME55-1/8-T0-9312-F |
| A7R7 | 0698-3228 | 9 | | RESISTOR 49.9K 1% .125W F TC=0+-100 | 28480 | 0698-3228 |
| A7R8 | 0698-5575 | 3 | 6 | RESISTOR 100K .5% .125W F TC=0+-100 | 24546 | C4-1/8-T0-1003-D |
| A7R9 | 0698-3228 | 9 | | RESISTOR 49.9K 1% .125W F TC=0+-100 | 28480 | 0698-3228 |
| A7R10 | 0684-1031 | 9 | | RESISTOR 10K 10% .25W FC TC=-400/+700 | 01121 | CB1031 |
| A7R11 | 0698-5575 | 3 | | RESISTOR 100K .5% .125W F TC=0+-100 | 24546 | C4-1/8-T0-1003-D |
| A7R12 | 0698-5573 | 1 | 6 | RESISTOR 50K .5% .125W F TC=0+-100 | 24546 | C4-1/8-T0-5002-D |
| A7R13 | 0698-3445 | 2 | 6 | RESISTOR 348 1% .125W F TC=0+-100 | 24546 | C4-1/8-T0-348R-F |
| A7R14 | 0698-6688 | 2 | 7 | RESISTOR 99.8K .1% .05W PWW TC=±10 | 28480 | 0698-6688 |
| A7R15 | 0698-5573 | 1 | | RESISTOR 50K .5% .125W F TC=0+-100 | 24546 | C4-1/8-T0-5002-D |
| A7R16 | 0698-3445 | 2 | | RESISTOR 348 1% .125W F TC=0+-100 | 24546 | C4-1/8-T0-348R-F |
| A7R17 | 0698-6688 | 2 | | RESISTOR 99.8K .1% .05W PWW TC=±10 | 28480 | 0698-6688 |
| A7R18 | 0698-7973 | 9 | 8 | RESISTOR 50K .05% .125W F TC=0+-25 | 19701 | MFAC1/8-T9-5002-D |
| A7R19 | 0698-4158 | 6 | 5 | RESISTOR 100K .1% .125W F TC=0+-50 | 28480 | 0698-4158 |
| A7R21 | 0698-7973 | 9 | | RESISTOR 50K .05% .125W F TC=0+-25 | 19701 | MFAC1/8-T9-5002-D |
| A7R22 | 0698-4158 | 6 | | RESISTOR 100K .1% .125W F TC=0+-50 | 28480 | 0698-4158 |
| A7R23 | 0684-3931 | 2 | | RESISTOR 39K 10% .25W FC TC=-400/+800 | 01121 | CB3931 |
| A7R24 | 0684-3931 | 2 | | RESISTOR 39K 10% .25W FC TC=-400/+800 | 01121 | CB3931 |
| A7R25 | 0684-3931 | 2 | | RESISTOR 39K 10% .25W FC TC=-400/+800 | 01121 | CB3931 |
| A7R26 | 0684-3931 | 2 | | RESISTOR 39K 10% .25W FC TC=-400/+800 | 01121 | CB3931 |
| A7R27 | 0698-3268 | 7 | | RESISTOR 11.5K 1% .125W F TC=0+-100 | 24546 | C4-1/8-T0-1152-F |
| A7R28 | 0757-0442 | 9 | | RESISTOR 10K 1% .125W F TC=0+-100 | 24546 | C4-1/8-T0-1002-F |
| A7R29 | 0684-5621 | 1 | | RESISTOR 5.6K 10% .25W FC TC=-400/+700 | 01121 | CB5621 |
| A7R31 | 0757-0280 | 3 | | RESISTOR 1K 1% .125W F TC=0+-100 | 24546 | C4-1/8-T0-1001-F |
| A7R32 | 0698-4469 | 2 | 4 | RESISTOR 1.15K 1% .125W F TC=0+-100 | 24546 | C4-1/8-T0-1151-F |
| A7R33 | 0698-3268 | 7 | | RESISTOR 11.5K 1% .125W F TC=0+-100 | 24546 | C4-1/8-T0-1152-F |
| A7R34 | 0757-0442 | 9 | | RESISTOR 10K 1% .125W F TC=0+-100 | 24546 | C4-1/8-T0-1002-F |
| A7R35 | 0684-5621 | 1 | | RESISTOR 5.6K 10% .25W FC TC=-400/+700 | 01121 | CB5621 |
| A7R36 | 0757-0280 | 3 | | RESISTOR 1K 1% .125W F TC=0+-100 | 24546 | C4-1/8-T0-1001-F |
| A7R37 | 0698-4469 | 2 | | RESISTOR 1.15K 1% .125W F TC=0+-100 | 24546 | C4-1/8-T0-1151-F |
| A7R38 | 0698-3268 | 7 | | RESISTOR 11.5K 1% .125W F TC=0+-100 | 24546 | C4-1/8-T0-1152-F |
| A7R39 | 0757-0442 | 9 | | RESISTOR 10K 1% .125W F TC=0+-100 | 24546 | C4-1/8-T0-1002-F |
| A7R41 | 0684-5621 | 1 | | RESISTOR 5.6K 10% .25W FC TC=-400/+700 | 01121 | CB5621 |
| A7R42 | 0757-0280 | 3 | | RESISTOR 1K 1% .125W F TC=0+-100 | 24546 | C4-1/8-T0-1001-F |
| A7R43 | 0698-4469 | 2 | | RESISTOR 1.15K 1% .125W F TC=0+-100 | 24546 | C4-1/8-T0-1151-F |
| A7R44 | 0698-3268 | 7 | | RESISTOR 11.5K 1% .125W F TC=0+-100 | 24546 | C4-1/8-T0-1152-F |
| A7R45 | 0757-0442 | 9 | | RESISTOR 10K 1% .125W F TC=0+-100 | 24546 | C4-1/8-T0-1002-F |
| A7R46 | 0684-5621 | 1 | | RESISTOR 5.6K 10% .25W FC TC=-400/+700 | 01121 | CB5621 |
| A7R47 | 0757-0280 | 3 | | RESISTOR 1K 1% .125W F TC=0+-100 | 24546 | C4-1/8-T0-1001-F |
| A7R48 | 0698-4469 | 2 | | RESISTOR 1.15K 1% .125W F TC=0+-100 | 24546 | C4-1/8-T0-1151-F |
| A7R49 | 0757-0464 | 5 | 1 | RESISTOR 90.9K 1% .125W F TC=0+-100 | 24546 | C4-1/8-T0-9092-F |
| A7R51 | 0698-3228 | 9 | | RESISTOR 49.9K 1% .125W F TC=0+-100 | 28480 | 0698-3228 |
| A7R52 | 0757-0978 | 6 | 4 | RESISTOR 95.3K 1% .125W F TC=0+-100 | 24546 | C4-1/8-T0-9532-F |
| A7R53 | 0698-3228 | 9 | | RESISTOR 49.9K 1% .125W F TC=0+-100 | 28480 | 0698-3228 |
| A7R54 | 0757-0978 | 6 | | RESISTOR 95.3K 1% .125W F TC=0+-100 | 24546 | C4-1/8-T0-9532-F |
| A7R55 | 0698-3228 | 9 | | RESISTOR 49.9K 1% .125W F TC=0+-100 | 28480 | 0698-3228 |
| A7R56 | 0698-5575 | 3 | | RESISTOR 100K .5% .125W F TC=0+-100 | 24546 | C4-1/8-T0-1003-D |
| A7R57 | 0698-5573 | 1 | | RESISTOR 50K .5% .125W F TC=0+-100 | 24546 | C4-1/8-T0-5002-D |
| A7R58 | 0698-5575 | 3 | | RESISTOR 100K .5% .125W F TC=0+-100 | 24546 | C4-1/8-T0-1003-D |
| A7R59 | 0698-5573 | 1 | | RESISTOR 50K .5% .125W F TC=0+-100 | 24546 | C4-1/8-T0-5002-D |
| A7R61 | 0698-3445 | 2 | | RESISTOR 348 1% .125W F TC=0+-100 | 24546 | C4-1/8-T0-348R-F |
| A7R62 | 0698-6688 | 2 | | RESISTOR 99.8K .1% .05W PWW TC=±10 | 28480 | 0698-6688 |
| A7R63 | 0698-7973 | 9 | | RESISTOR 50K .05% .125W F TC=0+-25 | 19701 | MFAC1/8-T9-5002-D |
| A7R64 | 0698-3445 | 2 | | RESISTOR 348 1% .125W F TC=0+-100 | 24546 | C4-1/8-T0-348R-F |
| A7R65 | 0698-6688 | 2 | | RESISTOR 99.8K .1% .05W PWW TC=±10 | 28480 | 0698-6688 |
| A7R66 | 0698-7973 | 9 | | RESISTOR 50K .05% .125W F TC=0+-25 | 19701 | MFAC1/8-T9-5002-D |
| A7R67 | 0698-4158 | 6 | | RESISTOR 100K .1% .125W F TC=0+-50 | 28480 | 0698-4158 |
| A7R68 | 0698-7973 | 9 | | RESISTOR 50K .05% .125W F TC=0+-25 | 19701 | MFAC1/8-T9-5002-D |
| A7R69 | 0698-7975 | 1 | 2 | RESISTOR 100K .05% .125W F TC=0+-25 | 19701 | MFAC1/8-T9-1003-D |
| A7R71 | 0698-7973 | 9 | | RESISTOR 50K .05% .125W F TC=0+-25 | 19701 | MFAC1/8-T9-5002-D |
| A7R72 | 0698-7975 | 1 | | RESISTOR 100K .05% .125W F TC=0+-25 | 19701 | MFAC1/8-T9-1003-D |
| A7R73 | 0811-1794 | 2 | | RESISTOR 99.25K .1% .05W PWW TC=0+-10 | 20940 | 140-1/80-D-99251-B |
| A7R74 | 0698-6688 | 7 | 1 | RESISTOR 99.8K .1% .05W PWW TC=±10 | 28480 | 0698-6688 |
| A7R75 | 0757-0449 | 6 | | RESISTOR 20K 1% .125W F TC=0+-100 | 24546 | C4-1/8-T0-2002-F |
| A7R76 | 0757-0449 | 6 | | RESISTOR 20K 1% .125W F TC=0+-100 | 24546 | C4-1/8-T0-2002-F |
| A7R77 | 0757-0449 | 6 | | RESISTOR 20K 1% .125W F TC=0+-100 | 24546 | C4-1/8-T0-2002-F |
| A7R78 | 0757-0449 | 6 | | RESISTOR 20K 1% .125W F TC=0+-100 | 24546 | C4-1/8-T0-2002-F |
| A7R79 | 0757-0449 | 6 | | RESISTOR 20K 1% .125W F TC=0+-100 | 24546 | C4-1/8-T0-2002-F |
| A7R81 | 0757-0449 | 6 | | RESISTOR 20K 1% .125W F TC=0+-100 | 24546 | C4-1/8-T0-2002-F |
| A7R82 | 0757-0449 | 6 | | RESISTOR 20K 1% .125W F TC=0+-100 | 24546 | C4-1/8-T0-2002-F |

See introduction to this section for ordering information
*Indicates factory selected value

## Table 6-3. Replaceable Parts (Cont'd).

| Reference Designation | HP Part Number | CD | Qty | Description | Mfr Code | Mfr Part Number |
|---|---|---|---|---|---|---|
| A7R83 | 0757-0449 | 6 | | RESISTOR 20K 1% .125W F TC=0+-100 | 24546 | C4-1/8-TO-2002-F |
| A7R84 | 0757-0449 | 6 | | RESISTOR 20K 1% .125W F TC=0+-100 | 24546 | C4-1/8-TO-2002-F |
| A7R85 | 0757-0449 | 6 | | RESISTOR 20K 1% .125W F TC=0+-100 | 24546 | C4-1/8-TO-2002-F |
| A7R86 | 0757-0449 | 6 | | RESISTOR 20K 1% .125W F TC=0+-100 | 24546 | C4-1/8-TO-2002-F |
| A7R87 | 0757-0449 | 6 | | RESISTOR 20K 1% .125W F TC=0+-100 | 24546 | C4-1/8-TO-2002-F |
| A7R88 | 0757-0449 | 6 | | RESISTOR 20K 1% .125W F TC=0+-100 | 24546 | C4-1/8-TO-2002-F |
| A7R89 | 0757-0449 | 6 | | RESISTOR 20K 1% .125W F TC=0+-100 | 24546 | C4-1/8-TO-2002-F |
| A7R91 | 0757-0449 | 6 | | RESISTOR 20K 1% .125W F TC=0+-100 | 24546 | C4-1/8-TO-2002-F |
| A7R92 | 0757-0449 | 6 | | RESISTOR 20K 1% .125W F TC=0+-100 | 24546 | C4-1/8-TO-2002-F |
| A7R93 | 0757-0449 | 6 | | RESISTOR 20K 1% .125W F TC=0+-100 | 24546 | C4-1/8-TO-2002-F |
| A7R94 | 0757-0449 | 6 | | RESISTOR 20K 1% .125W F TC=0+-100 | 24546 | C4-1/8-TO-2002-F |
| A7R95 | 0757-0449 | 6 | | RESISTOR 20K 1% .125W F TC=0+-100 | 24546 | C4-1/8-TO-2002-F |
| A7R96 | 0757-0449 | 6 | | RESISTOR 20K 1% .125W F TC=0+-100 | 24546 | C4-1/8-TO-2002-F |
| A7R97 | 0684-5621 | 1 | | RESISTOR 5.6K 10% .25W FC TC=-400/+700 | 01121 | CB5621 |
| A7R98 | 0684-5621 | 1 | | RESISTOR 5.6K 10% .25W FC TC=-400/+700 | 01121 | CB5621 |
| A7R99 | 0684-5621 | 1 | | RESISTOR 5.6K 10% .25W FC TC=-400/+700 | 01121 | CB5621 |
| A7R101 | 0684-5621 | 1 | | RESISTOR 5.6K 10% .25W FC TC=-400/+700 | 01121 | CB5621 |
| A7R102 | 0757-0438 | 3 | | RESISTOR 5.11K 1% .125W F TC=0+-100 | 24546 | C4-1/8-TO-5111-F |
| A7R103 | 0757-0438 | 3 | | RESISTOR 5.11K 1% .125W F TC=0+-100 | 24546 | C4-1/8-TO-5111-F |
| A7R104 | 0757-0442 | 9 | | RESISTOR 10K 1% .125W F TC=0+-100 | 24546 | C4-1/8-TO-1002-F |
| A7R105 | 0684-3931 | 2 | | RESISTOR 39K 10% .25W FC TC=-400/+800 | 01121 | CB3931 |
| A7R106 | 0684-1031 | 9 | | RESISTOR 10K 10% .25W FC TC=-400/+700 | 01121 | CB1031 |
| A7R107 | 0684-3931 | 2 | | RESISTOR 39K 10% .25W FC TC=-400/+800 | 01121 | CB3931 |
| A7R108 | 0684-1031 | 9 | | RESISTOR 10K 10% .25W FC TC=-400/+700 | 01121 | CB1031 |
| A7R109* | 0698-3160 | 8 | 1 | RESISTOR 31.6K 1% .125W F TC=0+-100 | 24546 | C4-1/8-TO-3162-F |
| A7R111* | 0698-4490 | 9 | 1 | RESISTOR 29.4K 1% .125W F TC=0+-100 | 24546 | C4-1/8-TO-2942-F |
| A7R112 | 0698-3228 | 9 | | RESISTOR 49.9K 1% .125W F TC=0+-100 | 28480 | 0698-3228 |
| A7R113 | 0757-0438 | 3 | | RESISTOR 5.11K 1% .125W F TC=0+-100 | 24546 | C4-1/8-TO-5111-F |
| A7R114 | 0698-3496 | 5 | 1 | RESISTOR 8.66K 1% .125W F TC=0+-100 | 24546 | C4-1/8-TO-8661-F |
| A7R115 | 0757-0438 | 3 | | RESISTOR 5.11K 1% .125W F TC=0+-100 | 24546 | C4-1/8-TO-5111-F |
| A7R116 | 0757-0978 | 6 | | RESISTOR 95.3K 1% .125W F TC=0+-100 | 24546 | C4-1/8-TO-9532-F |
| A7R117 | 0757-0465 | 6 | | RESISTOR 100K 1% .125W F TC=0+-100 | 24546 | C4-1/8-TO-1003-F |
| A7R118 | 0698-3228 | 9 | | RESISTOR 49.9K 1% .125W F TC=0+-100 | 28480 | 0698-3228 |
| A7R119 | 0757-0978 | 6 | | RESISTOR 95.3K 1% .125W F TC=0+-100 | 24546 | C4-1/8-TO-9532-F |
| A7R121 | 0698-3228 | 9 | | RESISTOR 49.9K 1% .125W F TC=0+-100 | 28480 | 0698-3228 |
| A7R122 | 0698-5575 | 3 | | RESISTOR 100K .5% .125W F TC=0+-100 | 24546 | C4-1/8-TO-1003-D |
| A7R123 | 0698-3228 | 9 | | RESISTOR 49.9K 1% .125W F TC=0+-100 | 28480 | 0698-3228 |
| A7R124 | 0698-5575 | 3 | | RESISTOR 100K .5% .125W F TC=0+-100 | 24546 | C4-1/8-TO-1003-D |
| A7R125 | 0698-5573 | 1 | | RESISTOR 50K .5% .125W F TC=0+-100 | 24546 | C4-1/8-TO-5002-D |
| A7R126 | 0698-6688 | 2 | | RESISTOR 99.8K .1% .05W PWW TC=±10 | 28480 | 0698-6688 |
| A7R127 | 0698-3445 | 2 | | RESISTOR 348 1% .125W F TC=0+-100 | 24546 | C4-1/8-TO-348R-F |
| A7R128 | 0698-6688 | 2 | | RESISTOR 99.8K .1% .05W PWW TC=±10 | 28480 | 0698-6688 |
| A7R129 | 0698-3445 | 2 | | RESISTOR 348 1% .125W F TC=0+-100 | 24546 | C4-1/8-TO-348R-F |
| A7R131 | 0698-5573 | 1 | | RESISTOR 50K .5% .125W F TC=0+-100 | 24546 | C4-1/8-TO-5002-D |
| A7R132 | 0698-7973 | 9 | | RESISTOR 50K .05% .125W F TC=0+-25 | 19701 | MF4C1/8-T9-5002-D |
| A7R133 | 0698-4158 | 6 | | RESISTOR 100K .1% .125W F TC=0+-50 | 28480 | 0698-4158 |
| A7R134 | 0698-7973 | 9 | | RESISTOR 50K .05% .125W F TC=0+-25 | 19701 | MF4C1/8-T9-5002-D |
| A7R135 | 0698-4158 | 6 | | RESISTOR 100K .1% .125W F TC=0+-50 | 28480 | 0698-4158 |
| A7R136 | 0687-3301 | 6 | 2 | RESISTOR 33 10% .5W CC TC=0+412 | 01121 | EB3301 |
| A7R137 | 0687-3301 | 6 | | RESISTOR 33 10% .5W CC TC=0+412 | 01121 | EB3301 |
| A7R138 | 0698-3193 | 7 | | RESISTOR 10K .25% .125W F TC=0+-50 | 28480 | 0698-3193 |
| A7R139 | 0698-3193 | 7 | | RESISTOR 10K .25% .125W F TC=0+-50 | 28480 | 0698-3193 |
| A7R140 | 0684-1031 | 9 | | RESISTOR 10K 10% .25W FC TC=-400/+700 | 01121 | CB1031 |
| A7U1 | 1826-0026 | 3 | 2 | IC COMPARATOR PRCN TO-99 | 01295 | LM311L |
| A7U2 | 1820-0939 | 5 | 3 | IC FF CMOS D-TYPE POS-EDGE-TRIG DUAL | 01928 | CD4013AF |
| A7U3 | 1820-0949 | 7 | 4 | IC GATE CMOS NAND QUAD 2-INP | 01928 | CD4011AF |
| A7U4 | 1820-0943 | 1 | 2 | IC GATE CMOS NAND TPL 3-INP | 01928 | CD4023AF |
| A7U5 | 1820-1114 | 0 | 6 | IC CNTR CMOS BIN SYNCHRO POS-EDGE-TRIG | 04713 | MC14516BCP |
| A7U6 | 1820-1114 | 0 | | IC CNTR CMOS BIN SYNCHRO POS-EDGE-TRIG | 04713 | MC14516BCP |
| A7U7 | 1820-0938 | 4 | 3 | IC FF CMOS J-K M/S POS-EDGE-TRIG DUAL | 01928 | CD4027AE |
| A7U8 | 1820-0943 | 1 | | IC GATE CMOS NAND TPL 3-INP | 01928 | CD4023AF |
| A7U9 | 1820-0949 | 7 | | IC GATE CMOS NAND QUAD 2-INP | 01928 | CD4011AF |
| A7U11 | 1820-0928 | 2 | 3 | IC BFR CMOS QUAD | 01928 | CD4041AE |
| A7U12 | 1820-1145 | 7 | 1 | IC BFR CMOS INV HEX 1-INP | 01928 | CD4049AF |
| A7U13 | 1820-0949 | 7 | | IC GATE CMOS NAND QUAD 2-INP | 01928 | CD4011AF |
| A7U14 | 1820-0203 | 6 | 5 | IC OP AMP GP TO-99 | 01928 | CA741CT |
| A7U15 | 1820-1601 | 0 | 1 | IC GATE CMOS EXCL-OR QUAD 2-INP | 01928 | CD4070BE |
| A7U16 | 1820-0938 | 4 | | IC FF CMOS J-K M/S POS-EDGE-TRIG DUAL | 01928 | CD4027AE |
| A7U17 | 1820-0946 | 4 | 2 | IC GATE CMOS NOR QUAD 2-INP | 01928 | CD4001AF |
| A7U18 | 1826-0021 | 8 | 12 | IC OP AMP GP TO-99 | 27014 | LM310H |
| A7U19 | 1826-0026 | 3 | | IC COMPARATOR PRCN TO-99 | 01295 | LM311L |
| A7U21 | 1826-0021 | 8 | | IC OP AMP GP TO-99 | 27014 | LM310H |
| A7U22 | 1820-0951 | 1 | 7 | IC MUXR/DATA-SEL CMOS 2-TO-1-LINE QUAD | 01928 | CD4019AF |
| A7U23 | 1820-0946 | 4 | | IC GATE CMOS NOR QUAD 2-INP | 01928 | CD4001AF |
| A7U24 | 1820-0938 | 4 | | IC FF CMOS J-K M/S POS-EDGE-TRIG DUAL | 01928 | CD4027AE |
| A7U25 | 1820-0951 | 1 | | IC MUXR/DATA-SEL CMOS 2-TO-1-LINE QUAD | 01928 | CD4019AF |
| A7U26 | 1820-0951 | 1 | | IC MUXR/DATA-SEL CMOS 2-TO-1-LINE QUAD | 01928 | CD4019AF |
| A7U27 | 1820-0203 | 6 | | IC OP AMP GP TO-99 | 01928 | CA741CT |

See introduction to this section for ordering information
*Indicates factory selected value

Replaceable Parts

## Table 6-3. Replaceable Parts (Cont'd).

| Reference Designation | HP Part Number | C D | Qty | Description | Mfr Code | Mfr Part Number |
|---|---|---|---|---|---|---|
| A7U28 | 1820-1114 | 0 | | IC CNTR CMOS BIN SYNCHRO POS-EDGE-TRIG | 04713 | MC14516BCP |
| A7U29 | 1820-1114 | 0 | | IC CNTR CMOS BIN SYNCHRO POS-EDGE-TRIG | 04713 | MC14516BCP |
| A7U31 | 1820-0958 | 8 | 2 | IC LCH CMOS D-TYPE QUAD | 01928 | CD4042AF |
| A7U32 | 1820-0926 | 0 | 2 | IC ADDR CMOS FULL ADDER 4-BIT | 01928 | CD4008AF |
| A7U33 | 1820-0958 | 8 | | IC LCH CMOS D-TYPE QUAD | 01928 | CD4042AF |
| A7U34 | 1820-0926 | 0 | | IC ADDR CMOS FULL ADDER 4-BIT | 01928 | CD4008AF |
| A7U35 | 1818-1756 | 5 | 8 | IC RAM MEMORY | 28480 | 1818-1756 |
| A7U36 | 1818-1756 | 5 | | IC RAM MEMORY | 28480 | 1818-1756 |
| A7U37 | 1818-1756 | 5 | | IC RAM MEMORY | 28480 | 1818-1756 |
| A7U38 | 1818-1756 | 5 | | IC RAM MEMORY | 28480 | 1818-1756 |
| A7U39 | 1818-1756 | 5 | | IC RAM MEMORY | 28480 | 1818-1756 |
| A7U41 | 1818-1756 | 5 | | IC RAM MEMORY | 28480 | 1818-1756 |
| A7U42 | 1818-1756 | 5 | | IC RAM MEMORY | 28480 | 1818-1756 |
| A7U43 | 1818-1756 | 5 | | IC RAM MEMORY | 28480 | 1818-1756 |
| A7U44 | 1826-0021 | 8 | | IC OP AMP GP TO-99 | 27014 | LM310H |
| A7U45 | 1826-0021 | 8 | | IC OP AMP GP TO-99 | 27014 | LM310H |
| A7U46 | 1826-0021 | 8 | | IC OP AMP GP TO-99 | 27014 | LM310H |
| A7U47 | 1826-0021 | 8 | | IC OP AMP GP TO-99 | 27014 | LM310H |
| A7U48 | 1820-0939 | 5 | | IC FF CMOS D-TYPE POS-EDGE-TRIG DUAL | 01928 | CD4013AF |
| A7U49 | 1820-0951 | 1 | | IC MUXR/DATA-SEL CMOS 2-TO-1-LINE QUAD | 01928 | CD4019AF |
| A7U51 | 1820-0951 | 1 | | IC MUXR/DATA-SEL CMOS 2-TO-1-LINE QUAD | 01928 | CD4019AF |
| A7U52 | 1820-0951 | 1 | | IC MUXR/DATA-SEL CMOS 2-TO-1-LINE QUAD | 01928 | CD4019AF |
| A7U53 | 1826-0021 | 8 | | IC OP AMP GP TO-99 | 27014 | LM310H |
| A7U54 | 1820-0949 | 7 | | IC GATE CMOS NAND QUAD 2-INP | 01928 | CD4011AF |
| A7U55 | 1820-0939 | 5 | | IC FF CMOS D-TYPE POS-EDGE-TRIG DUAL | 01928 | CD4013AF |
| A7U56 | 1820-1114 | 0 | | IC CNTR CMOS BIN SYNCHRO POS-EDGE-TRIG | 04713 | MC14516BCP |
| A7U57 | 1820-1114 | 0 | | IC CNTR CMOS BIN SYNCHRO POS-EDGE-TRIG | 04713 | MC14516BCP |
| A7U58 | 1820-0951 | 1 | | IC MUXR/DATA-SEL CMOS 2-TO-1-LINE QUAD | 01928 | CD4019AF |
| A7U59 | 1820-0730 | 4 | 1 | IC MV TTL L MONOSTBL RETRIG/RESET DUAL | 07263 | 96L02DC |
| A7U61 | 1826-0021 | 8 | | IC OP AMP GP TO-99 | 27014 | LM310H |
| A7U62 | 1826-0021 | 8 | | IC OP AMP GP TO-99 | 27014 | LM310H |
| A7U63 | 1820-0928 | 2 | | IC BFR CMOS QUAD | 01928 | CD4041AE |
| A7U64 | 1820-0928 | 2 | | IC BFR CMOS QUAD | 01928 | CD4041AE |
| A7U65 | 1820-0203 | 6 | | IC OP AMP GP TO-99 | 01928 | CA741CT |
| A8 | 03580-66508 | 4 | 1 | BOARD ASSEMBLY-CONTROL | 28480 | 03580-66508 |
| A8C1 | 0121-0476 | 2 | | CAPACITOR-V TRMR-MICA 50-350PF 175V | 72136 | TS2517-7 |
| A8C2 | 0160-2940 | 1 | 1 | CAPACITOR-FXD 470PF +-5% 300VDC MICA | 28480 | 0160-2940 |
| A8C3 | 0150-0093 | 0 | | CAPACITOR-FXD .01UF +80-20% 100VDC CER | 28480 | 0150-0093 |
| A8C4 | 0160-0945 | 2 | 2 | CAPACITOR-FXD 910PF +-5% 100VDC MICA | 28480 | 0160-0945 |
| A8C5 | 0160-0945 | 2 | | CAPACITOR-FXD 910PF +-5% 100VDC MICA | 28480 | 0160-0945 |
| A8C6 | 0160-0363 | 8 | | CAPACITOR-FXD 620PF +-5% 300VDC MICA | 28480 | 0160-0363 |
| A8C7 | 0150-0093 | 0 | | CAPACITOR-FXD .01UF +80-20% 100VDC CER | 28480 | 0150-0093 |
| A8C8 | 0140-0206 | 6 | | CAPACITOR-FXD 270PF +-5% 500VDC MICA | 72136 | DM15F271J0500WV1CR |
| A8C9 | 0150-0084 | 9 | | CAPACITOR-FXD .1UF +80-20% 100VDC CER | 28480 | 0150-0084 |
| A8C11 | 0160-5344 | 5 | 1 | CAPACITOR-FXD .082 ±5% 100VDC | 84411 | HEW-249 |
| A8C12 | 0150-0093 | 0 | | CAPACITOR-FXD .01UF +80-20% 100VDC CER | 28480 | 0150-0093 |
| A8C13 | 0160-0161 | 4 | | CAPACITOR-FXD .01UF +-10% 200VDC POLYE | 28480 | 0160-0161 |
| A8C14 | 0160-0363 | 8 | | CAPACITOR-FXD 620PF +-5% 300VDC MICA | 28480 | 0160-0363 |
| A8C15 | 0170-0055 | 6 | 1 | CAPACITOR-FXD .1UF +-20% 200VDC POLYE | 28480 | 0170-0055 |
| A8C16 | 0150-0093 | 0 | | CAPACITOR-FXD .01UF +80-20% 100VDC CER | 28480 | 0150-0093 |
| A8C18 | 0150-0093 | 0 | | CAPACITOR-FXD .01UF +80-20% 100VDC CER | 28480 | 0150-0093 |
| A8C19 | 0160-0164 | 7 | 1 | CAPACITOR-FXD .039UF +-10% 200VDC POLYE | 28480 | 0160-0164 |
| A8C21 | 0180-0374 | 3 | 3 | CAPACITOR-FXD 10UF+-10% 20VDC TA | 56289 | 150D106X9020B2 |
| A8C22 | 0160-0166 | 9 | 1 | CAPACITOR-FXD .068UF +-10% 200VDC POLYE | 28480 | 0160-0166 |
| A8C23 | 0160-5269 | 5 | | CAPACITOR-FXD .047 ±10% 50VDC | 28480 | 0160-5269 |
| A8C24 | 0180-0376 | 5 | 1 | CAPACITOR-FXD .47UF+-10% 35VDC TA | 56289 | 150D474X9035A2 |
| A8C25 | 0180-0197 | 8 | | CAPACITOR-FXD 2.2UF+-10% 20VDC TA | 56289 | 150D225X9020A2 |
| A8C26 | 0150-0122 | 6 | 2 | CAPACITOR-FXD 2000PF +-20% 500VDC CER | 28480 | 0150-0122 |
| A8C27 | 0150-0122 | 6 | | CAPACITOR-FXD 2000PF +-20% 500VDC CER | 28480 | 0150-0122 |
| A8C28 | 0180-1746 | 5 | | CAPACITOR-FXD 15UF+-10% 20VDC TA | 56289 | 150D156X9020B2 |
| A8C29 | 0180-1746 | 5 | | CAPACITOR-FXD 15UF+-10% 20VDC TA | 56289 | 150D156X9020B2 |
| A8C31 | 0180-0141 | 2 | 1 | CAPACITOR-FXD 50UF+75-10% 50VDC AL | 56289 | 30D506G050DD2 |
| A8C32 | 0180-1746 | 5 | | CAPACITOR-FXD 15UF+-10% 20VDC TA | 56289 | 150D156X9020B2 |
| A8C33 | 0180-1746 | 5 | | CAPACITOR-FXD 15UF+-10% 20VDC TA | 56289 | 150D156X9020B2 |
| A8C34 | 0160-4571 | 1 | | CAPACITOR-FXD .1UF +80 20% 50VDC | 28480 | 0160-4571 |
| A8CR1 | 1901-0040 | 1 | | DIODE-SWITCHING 30V 50MA 2NS DO-35 | 28480 | 1901-0040 |
| A8CR2 | 1901-0040 | 1 | | DIODE-SWITCHING 30V 50MA 2NS DO-35 | 28480 | 1901-0040 |
| A8CR3 | 1901-0040 | 1 | | DIODE-SWITCHING 30V 50MA 2NS DO-35 | 28480 | 1901-0040 |
| A8CR4 | 1901-0040 | 1 | | DIODE-SWITCHING 30V 50MA 2NS DO-35 | 28480 | 1901-0040 |
| A8CR5 | 1902-0041 | 4 | | DIODE-ZNR 5.11V 5% DO-35 PD=.4W | 28480 | 1902-0041 |
| A8CR6 | 1901-0040 | 1 | | DIODE-SWITCHING 30V 50MA 2NS DO-35 | 28480 | 1901-0040 |
| A8CR7 | 1902-3182 | 0 | | DIODE-ZNR 12.1V 5% DO-35 PD=.4W | 28480 | 1902-3182 |
| A8CR8 | 1901-0040 | 1 | | DIODE-SWITCHING 30V 50MA 2NS DO-35 | 28480 | 1901-0040 |
| A8CR9 | 1901-0040 | 1 | | DIODE-SWITCHING 30V 50MA 2NS DO-35 | 28480 | 1901-0040 |
| A8CR11 | 1901-0040 | 1 | | DIODE-SWITCHING 30V 50MA 2NS DO-35 | 28480 | 1901-0040 |

See introduction to this section for ordering information
*Indicates factory selected value

Replaceable Parts

## Table 6-3. Replaceable Parts (Cont'd).

| Reference Designation | HP Part Number | C D | Qty | Description | Mfr Code | Mfr Part Number |
|---|---|---|---|---|---|---|
| A9C32 | 0180-1758 | 9 | | CAPACITOR-FXD 300UF+75-10% 3VDC AL | 56289 | 30D307G003DC2 |
| A9C33 | 0180-0061 | 5 | | CAPACITOR-FXD 100UF+75-10% 10VDC AL | 56289 | 30D107G010DC2 |
| A9C34 | 0180-0137 | 6 | 1 | CAPACITOR-FXD 100UF+-20% 10VDC TA | 56289 | 150D107X0010R2 |
| A9C35 | 0160-2728 | 9 | 1 | CAPACITOR-FXD 3600PF +-2% 500VDC MICA | 28480 | 0160-2728 |
| A9C36 | 0140-0217 | 9 | | CAPACITOR-FXD 140PF +-2% 300VDC MICA | 72136 | DM15F141G0300MV1CR |
| A9C37 | 0160-3269 | 9 | 2 | CAPACITOR-FXD 7610PF +-1% 100VDC MICA | 28480 | 0160-3269 |
| A9C38 | 0160-0341 | 2 | 1 | CAPACITOR-FXD 640PF +-1% 300VDC MICA | 28480 | 0160-0341 |
| A9C39 | 0160-3269 | 9 | | CAPACITOR-FXD 7610PF +-1% 100VDC MICA | 28480 | 0160-3269 |
| A9C41 | 0140-0233 | 9 | | CAPACITOR-FXD 480PF +-1% 300VDC MICA | 72136 | DM15F481F0300MV1C |
| A9C42 | 0160-2230 | 2 | 1 | CAPACITOR-FXD 3300PF +-5% 300VDC MICA | 28480 | 0160-2230 |
| A9C43 | 0180-0303 | 8 | 1 | CAPACITOR-FXD 100UF+75-10% 3VDC AL | 56289 | 30D107G003CB2 |
| A9C44 | 0160-2930 | 0 | | CAPACITOR-FXD .01UF +80-20% 100VDC CER | 28480 | 0150-0093 |
| A9C45 | 0180-0374 | 3 | | CAPACITOR-FXD 10UF+-10% 20VDC TA | 56289 | 150D106X9020B2 |
| A9C46 | 0180-0374 | 3 | | CAPACITOR-FXD 10UF+-10% 20VDC TA | 56289 | 150D106X9020B2 |
| A9C47 | 0160-2930 | 0 | | CAPACITOR-FXD .01UF +80-20% 100VDC CER | 28480 | 0150-0093 |
| A9C48 | 0180-0197 | 8 | | CAPACITOR-FXD 2.2UF+-10% 20VDC TA | 56289 | 150D225X9020A2 |
| A9C49 | 0160-2605 | 5 | | CAPACITOR-FXD .02UF +80-20% 25VDC CER | 28480 | 0160-2605 |
| A9C50 | 0150-0093 | 0 | | CAPACITOR-FXD .01UF +80-20% 100VDC CER | 28480 | 0150-0093 |
| A9C51 | 0160-2035 | 5 | 1 | CAPACITOR-FXD 750PF +-5% 300VDC MICA | 28480 | 0160-2035 |
| A9C52 | 0180-0197 | 8 | | CAPACITOR-FXD 2.2UF+-10% 20VDC TA | 56289 | 150D225X9020A2 |
| A9C53 | 0160-2930 | 0 | | CAPACITOR-FXD .01UF +80-20% 100VDC CER | 28480 | 0150-0093 |
| A9C54 | 0180-0197 | 8 | | CAPACITOR-FXD 2.2UF+-10% 20VDC TA | 56289 | 150D225X9020A2 |
| A9C55 | 0160-2009 | 3 | 1 | CAPACITOR-FXD 820PF +-5% 300VDC MICA | 28480 | 0160-2009 |
| A9C56 | 0180-0197 | 8 | | CAPACITOR-FXD 2.2UF+-10% 20VDC TA | 56289 | 150D225X9020A2 |
| A9C57 | 0160-2930 | 0 | | CAPACITOR-FXD .01UF +80-20% 100VDC CER | 28480 | 0150-0093 |
| A9C58 | 0160-2930 | 0 | | CAPACITOR-FXD .01UF +80-20% 100VDC CER | 28480 | 0150-0093 |
| A9C59 | 0180-0197 | 8 | | CAPACITOR-FXD 2.2UF+-10% 20VDC TA | 56289 | 150D225X9020A2 |
| A9C61 | 0180-0228 | 6 | | CAPACITOR-FXD 22UF+-10% 15VDC TA | 56289 | 150D226X9015B2 |
| A9C62 | 0180-0197 | 8 | | CAPACITOR-FXD 2.2UF+-10% 20VDC TA | 56289 | 150D225X9020A2 |
| A9C63 | 0180-0339 | 0 | 2 | CAPACITOR-FXD 50UF+75-10% 10VDC AL | 56289 | 30D506G010CB2 |
| A9C64 | 0180-0197 | 8 | | CAPACITOR-FXD 2.2UF+-10% 20VDC TA | 56289 | 150D225X9020A2 |
| A9C65 | 0180-0228 | 6 | | CAPACITOR-FXD 22UF+-10% 15VDC TA | 56289 | 150D226X9015B2 |
| A9C66 | 0180-0339 | 0 | | CAPACITOR-FXD 50UF+75-10% 10VDC AL | 56289 | 30D506G010CB2 |
| A9CR1 | 1901-0040 | 1 | | DIODE-SWITCHING 30V 50MA 2NS DO-35 | 28480 | 1901-0040 |
| A9CR2 | 1901-0040 | 1 | | DIODE-SWITCHING 30V 50MA 2NS DO-35 | 28480 | 1901-0040 |
| A9CR3 | 1901-0040 | 1 | | DIODE-SWITCHING 30V 50MA 2NS DO-35 | 28480 | 1901-0040 |
| A9CR4 | 1901-0040 | 1 | | DIODE-SWITCHING 30V 50MA 2NS DO-35 | 28480 | 1901-0040 |
| A9CR5 | 1901-0040 | 1 | | DIODE-SWITCHING 30V 50MA 2NS DO-35 | 28480 | 1901-0040 |
| A9J1 | 1251-2969 | 8 | 1 | CONNECTOR-PHONO SINGLE PHONO JACK; DIP | 28480 | 1251-2969 |
| A9L1 | 9100-3264 | 7 | 1 | INDUCTORRF-CH-MLD 2.34MH 2% .8D Q=200 | 28480 | 9100-3264 |
| A9L2 | 9100-3259 | 0 | 1 | INDUCTORRF-CH-MLD 2.86MH 10% Q=200 | 28480 | 9100-3259 |
| A9L3 | 9100-3260 | 3 | 1 | INDUCTORRF-CH-MLD 2.15H 2% .8D Q=200 | 28480 | 9100-3260 |
| A9L4 | 9100-3277 | 2 | | INDUCTORRF-CH-MLD 3.1MH 2% .62D Q=150 | 28480 | 9100-3277 |
| A9L5 | 9170-0894 | 0 | 1 | CORE-SHIELDING BEAD | 28480 | 9170-0894 |
| A9Q1 | 1855-0377 | 8 | 1 | TRANSISTOR J-FET N-CHAN D-MODE TO-18 SI | 28480 | 1855-0377 |
| A9Q2 | 1854-0226 | 4 | | TRANSISTOR NPN 2N4384 SI TO-18 PD=500MW | 13606 | 2N4384 |
| A9Q3 | 1853-0086 | 2 | | TRANSISTOR PNP SI PD=310MW FT=40MHZ | 27014 | 2N5087 |
| A9Q4 | 1854-0071 | 7 | | TRANSISTOR NPN SI PD=300MW FT=200MHZ | 28480 | 1854-0071 |
| A9Q5 | 1854-0071 | 7 | | TRANSISTOR NPN SI PD=300MW FT=200MHZ | 28480 | 1854-0071 |
| A9Q6 | 1854-0226 | 4 | | TRANSISTOR NPN 2N4384 SI TO-18 PD=500MW | 13606 | 2N4384 |
| A9Q7 | 1853-0086 | 2 | | TRANSISTOR PNP SI PD=310MW FT=40MHZ | 27014 | 2N5087 |
| A9Q8 | 1854-0071 | 7 | | TRANSISTOR NPN SI PD=300MW FT=200MHZ | 28480 | 1854-0071 |
| A9Q9 | 1854-0071 | 7 | | TRANSISTOR NPN SI PD=300MW FT=200MHZ | 28480 | 1854-0071 |
| A9Q11 | 1854-0071 | 7 | | TRANSISTOR NPN SI PD=300MW FT=200MHZ | 28480 | 1854-0071 |
| A9Q12 | 1854-0071 | 7 | | TRANSISTOR NPN SI PD=300MW FT=200MHZ | 28480 | 1854-0071 |
| A9Q13 | 1854-0071 | 7 | | TRANSISTOR NPN SI PD=300MW FT=200MHZ | 28480 | 1854-0071 |
| A9Q14 | 1854-0226 | 4 | | TRANSISTOR NPN 2N4384 SI TO-18 PD=500MW | 13606 | 2N4384 |
| A9Q15 | 1853-0010 | 2 | | TRANSISTOR PNP SI TO-18 PD=360MW | 28480 | 1853-0010 |
| A9Q16 | 1854-0071 | 7 | | TRANSISTOR NPN SI PD=300MW FT=200MHZ | 28480 | 1854-0071 |
| A9Q17 | 1854-0071 | 7 | | TRANSISTOR NPN SI PD=300MW FT=200MHZ | 28480 | 1854-0071 |
| A9Q18 | 1854-0071 | 7 | | TRANSISTOR NPN SI PD=300MW FT=200MHZ | 28480 | 1854-0071 |
| A9Q19 | 1853-0010 | 2 | | TRANSISTOR PNP SI TO-18 PD=360MW | 28480 | 1853-0010 |
| A9R1 | 2100-0580 | 7 | 1 | RESISTOR-TRMR 500K 10% C TOP-ADJ 1-TRN | 28480 | 2100-0580 |
| A9R2 | 2100-0640 | 0 | 1 | RESISTOR-VAR W/SW 5K 10% LIN SPST-NO | 28480 | 2100-0640 |
| A9R3 | 0698-5159 | 9 | 2 | RESISTOR 1M .5% .25W F TC=0+-100 | 28480 | 0698-5159 |
| A9R4 | 0698-4055 | 2 | 2 | RESISTOR 1K .25% .125W F TC=0+-100 | 03888 | PME55-1/8-T0-1001-C |
| A9R5 | 0698-5132 | 8 | 2 | RESISTOR 990K .5% .25W F TC=0+-100 | 28480 | 0698-5132 |
| A9R6 | 0757-0271 | 2 | 2 | RESISTOR 124K 1% .125W F TC=0+-100 | 24546 | C4-1/8-T0-1243-F |
| A9R7 | 0698-6661 | 0 | 1 | RESISTOR 11.11K .25% .125W F TC=0+-100 | 28480 | 0698-6661 |
| A9R8 | 0698-5132 | 8 | | RESISTOR 990K .5% .25W F TC=0+-100 | 28480 | 0698-5132 |
| A9R9 | 0698-5131 | 7 | 2 | RESISTOR 900K .5% .25W F TC=0+-100 | 19701 | MF52C1/4-T0-9003-D |
| A9R11 | 0698-6659 | 6 | 1 | RESISTOR 127K .25% .125W F TC=0+-100 | 28480 | 0698-6659 |
| A9R12 | 0698-5131 | 7 | | RESISTOR 900K .5% .25W F TC=0+-100 | 19701 | MF52C1/4-T0-9003-D |
| A9R13 | 0757-0430 | 5 | | RESISTOR 2.21K 1% .125W F TC=0+-100 | 24546 | C4-1/8-T0-2211-F |
| A9R14 | 0698-3150 | 6 | 1 | RESISTOR 2.37K 1% .125W F TC=0+-100 | 24546 | C4-1/8-T0-2371-F |
| A9R15 | 0698-5159 | 9 | | RESISTOR 1M .5% .25W F TC=0+-100 | 28480 | 0698-5159 |
| A9R16 | 0757-0824 | 1 | 1 | RESISTOR 2M 1% .5W F TC=0+-100 | 28480 | 0757-0824 |

See introduction to this section for ordering information
*Indicates factory selected value

Replaceable Parts

## Table 6-3. Replaceable Parts (Cont'd).

| Reference Designation | HP Part Number | C D | Qty | Description | Mfr Code | Mfr Part Number |
|---|---|---|---|---|---|---|
| A9R17 | 0684-1041 | 1 | | RESISTOR 100K 10% .25W FC TC=-400/+800 | 01121 | CB1041 |
| A9R18 | 0698-3581 | 7 | 2 | RESISTOR 13.7K 1% .125W F TC=0+-100 | 24546 | C4-1/8-T0-1372-F |
| A9R19 | 0698-3581 | 7 | | RESISTOR 13.7K 1% .125W F TC=0+-100 | 24546 | C4-1/8-T0-1372-F |
| A9R21 | 0698-4473 | 8 | | RESISTOR 8.06K 1% .125W F TC=0+-100 | 24546 | C4-1/8-T0-8061-F |
| A9R22 | 0757-0442 | 9 | | RESISTOR 10K 1% .125W F TC=0+-100 | 24546 | C4-1/8-T0-1002-F |
| A9R23 | 0698-4421 | 6 | 2 | RESISTOR 249 1% .125W F TC=0+-100 | 24546 | C4-1/8-T0-249R-F |
| A9R24 | 0698-3193 | 7 | | RESISTOR 10K .25% .125W F TC=0+-50 | 28480 | 0698-3193 |
| A9R25 | 0698-6862 | 3 | 1 | RESISTOR 1.153K .25% .125W F TC=0+-50 | 28480 | 0698-6862 |
| A9R26 | 0698-4486 | 3 | | RESISTOR 24.9K 1% .125W F TC=0+-100 | 24546 | C4-1/8-T0-2492-F |
| A9R27 | 0698-3382 | 6 | | RESISTOR 5.49K 1% .125W F TC=0+-100 | 24546 | C4-1/8-T0-5491-F |
| A9R28 | 0757-0407 | 6 | | RESISTOR 200 1% .125W F TC=0+-100 | 24546 | C4-1/8-T0-201-F |
| A9R29 | 0698-4464 | 7 | 1 | RESISTOR 887 1% .125W F TC=0+-100 | 24546 | C4-1/8-T0-887R-F |
| A9R31 | 0684-1041 | 1 | | RESISTOR 100K 10% .25W FC TC=-400/+800 | 01121 | CB1041 |
| A9R32 | 0757-0448 | 5 | | RESISTOR 18.2K 1% .125W F TC=0+-100 | 24546 | C4-1/8-T0-1822-F |
| A9R33 | 0684-4701 | 6 | | RESISTOR 47 10% .25W FC TC=-400/+500 | 01121 | CB4701 |
| A9R34 | 0757-0407 | 6 | | RESISTOR 200 1% .125W F TC=0+-100 | 24546 | C4-1/8-T0-201-F |
| A9R35 | 0698-3488 | 3 | | RESISTOR 442 1% .125W F TC=0+-100 | 24546 | C4-1/8-T0-442R-F |
| A9R36 | 0684-1041 | 1 | | RESISTOR 100K 10% .25W FC TC=-400/+800 | 01121 | CB1041 |
| A9R37 | 0757-0442 | 9 | | RESISTOR 10K 1% .125W F TC=0+-100 | 24546 | C4-1/8-T0-1002-F |
| A9R38 | 0757-0278 | 9 | 2 | RESISTOR 1.78K 1% .125W F TC=0+-100 | 24546 | C4-1/8-T0-1781-F |
| A9R39 | 0698-6780 | 0 | 1 | RESISTOR 5.62K .25% .125W F TC=0+-50 | 28480 | 0698-6780 |
| A9R40 | 0684-1041 | 1 | | RESISTOR 100K 10% .25W FC TC=-400/+800 | 01121 | CB1041 |
| A9R41 | 0698-6823 | 6 | 1 | RESISTOR 2.61K .25% .125W F TC=0+-100 | 19701 | MFQC1/8-T0-2611-C |
| A9R42 | 0698-4473 | 8 | | RESISTOR 8.06K 1% .125W F TC=0+-100 | 24546 | C4-1/8-T0-8061-F |
| A9R43 | 0698-3495 | 2 | | RESISTOR 866 1% .125W F TC=0+-100 | 24546 | C4-1/8-T0-866R-F |
| A9R44 | 0757-0424 | 7 | 1 | RESISTOR 1.1K 1% .125W F TC=0+-100 | 24546 | C4-1/8-T0-1101-F |
| A9R45 | 0757-0442 | 9 | | RESISTOR 10K 1% .125W F TC=0+-100 | 24546 | C4-1/8-T0-1002-F |
| A9R46 | 0757-0442 | 9 | | RESISTOR 10K 1% .125W F TC=0+-100 | 24546 | C4-1/8-T0-1002-F |
| A9R47 | 0698-3150 | 0 | 1 | RESISTOR 4.22K 1% .125W F TC=0+-100 | 24546 | C4-1/8-T0-4221-F |
| A9R48 | 0757-0407 | 6 | | RESISTOR 200 1% .125W F TC=0+-100 | 24546 | C4-1/8-T0-201-F |
| A9R49 | 0698-4483 | 0 | | RESISTOR 18.7K 1% .125W F TC=0+-100 | 24546 | C4-1/8-T0-1872-F |
| A9R50 | 0683-1025 | 9 | | RESISTOR 1K 5% .25W FC TC=-400/+800 | 01121 | CB1025 |
| A9R51 | 0698-4421 | 6 | | RESISTOR 249 1% .125W F TC=0+-100 | 24546 | C4-1/8-T0-249R-F |
| A9R52 | 0684-1041 | 1 | | RESISTOR 100K 10% .25W FC TC=-400/+800 | 01121 | CB1041 |
| A9R53 | 0757-0278 | 9 | | RESISTOR 1.78K 1% .125W F TC=0+-100 | 24546 | C4-1/8-T0-1781-F |
| A9R54 | 0757-0407 | 6 | | RESISTOR 200 1% .125W F TC=0+-100 | 24546 | C4-1/8-T0-201-F |
| A9R55 | 0698-3327 | 9 | 1 | RESISTOR 3.92K .5% .125W F TC=0+-100 | 03888 | PME55-1/8-T0-3921-D |
| A9R56 | 0698-4518 | 2 | 1 | RESISTOR 137K 1% .125W F TC=0+-100 | 24546 | C4-1/8-T0-1373-F |
| A9R57 | 0698-4492 | 1 | 1 | RESISTOR 32.4K 1% .125W F TC=0+-100 | 24546 | C4-1/8-T0-3242-F |
| A9R58 | 0698-4055 | 2 | | RESISTOR 1K .25% .125W F TC=0+-100 | 03888 | PME55-1/8-T0-1001-C |
| A9R59 | 0698-3497 | 0 | | RESISTOR 6.04K 1% .125W F TC=0+-100 | 24546 | C4-1/8-T0-6040-F |
| A9R61 | 0698-4488 | 5 | | RESISTOR 26.7K 1% .125W F TC=0+-100 | 24546 | C4-1/8-T0-2672-F |
| A9R62 | 0698-7417 | 6 | 1 | RESISTOR 69.8K .25% .125W F TC=0+-100 | 19701 | MFQC1/8-T0-6982-C |
| A9R63 | 0757-0407 | 6 | | RESISTOR 200 1% .125W F TC=0+-100 | 24546 | C4-1/8-T0-201-F |
| A9R64 | 0757-0442 | 9 | | RESISTOR 10K 1% .125W F TC=0+-100 | 24546 | C4-1/8-T0-1002-F |
| A9R65 | 0757-0161 | 9 | | RESISTOR 604 1% .125W F TC=0+-100 | 24546 | C4-1/8-T0-604R-F |
| A9R66 | 0698-4422 | 7 | 1 | RESISTOR 1.27K 1% .125W F TC=0+-100 | 24546 | C4-1/8-T0-1271-F |
| A9R67 | 0757-0283 | 0 | | RESISTOR 2K 1% .125W F TC=0+-100 | 24546 | C4-1/8-T0-2001-F |
| A9R68 | 0757-0976 | 4 | 2 | RESISTOR 150K 2% .125W F TC=0+-100 | 24546 | C4-1/8-T0-1502-G |
| A9R69 | 0698-4202 | 1 | 2 | RESISTOR 8.87K 1% .125W F TC=0+-100 | 24546 | C4-1/8-T0-8871-F |
| A9R71 | 0757-0438 | 3 | | RESISTOR 5.11K 1% .125W F TC=0+-100 | 24546 | C4-1/8-T0-5111-F |
| A9R72 | 0757-0283 | 6 | | RESISTOR 2K 1% .125W F TC=0+-100 | 24546 | C4-1/8-T0-2001-F |
| A9R73 | 0698-4202 | 1 | | RESISTOR 8.87K 1% .125W F TC=0+-100 | 24546 | C4-1/8-T0-8871-F |
| A9R74 | 0757-0976 | 4 | | RESISTOR 150K 2% .125W F TC=0+-100 | 24546 | C4-1/8-T0-1502-G |
| A9R75 | 0757-0453 | 2 | | RESISTOR 30.1K 1% .125W F TC=0+-100 | 24546 | C4-1/8-T0-3012-F |
| A9R76 | 0757-0438 | 3 | | RESISTOR 5.11K 1% .125W F TC=0+-100 | 24546 | C4-1/8-T0-5111-F |
| A9R77 | 0757-0438 | 3 | | RESISTOR 5.11K 1% .125W F TC=0+-100 | 24546 | C4-1/8-T0-5111-F |
| A9R78 | 0683-1025 | 9 | | RESISTOR 1K 5% .25W FC TC=-400/+600 | 01121 | CB1025 |
| A9R79 | 0757-0430 | 9 | | RESISTOR 3.65K 1% .125W F TC=0+-100 | 24546 | C4-1/8-T0-3651-F |
| A9R81 | 0698-3437 | 2 | 3 | RESISTOR 133 1% .125W F TC=0+-100 | 24546 | C4-1/8-T0-133R-F |
| A9R82 | 0698-3437 | 2 | | RESISTOR 133 1% .125W F TC=0+-100 | 24546 | C4-1/8-T0-133R-F |
| A9R83 | 0698-3437 | 2 | | RESISTOR 133 1% .125W F TC=0+-100 | 24546 | C4-1/8-T0-133R-F |
| A9R84 | 0757-0404 | 3 | 4 | RESISTOR 130 1% .125W F TC=0+-100 | 24546 | C4-1/8-T0-131-F |
| A9R85 | 0757-0404 | 3 | | RESISTOR 130 1% .125W F TC=0+-100 | 24546 | C4-1/8-T0-131-F |
| A9R86 | 0757-0404 | 3 | | RESISTOR 130 1% .125W F TC=0+-100 | 24546 | C4-1/8-T0-131-F |
| A9R87 | 0757-0404 | 3 | | RESISTOR 130 1% .125W F TC=0+-100 | 24546 | C4-1/8-T0-131-F |
| A9R88 | 0698-3446 | 3 | 1 | RESISTOR 383 1% .125W F TC=0+-100 | 24546 | C4-1/8-T0-383R-F |
| A9R89 | 0757-0438 | 3 | | RESISTOR 5.11K 1% .125W F TC=0+-100 | 24546 | C4-1/8-T0-5111-F |
| A9R91 | 0757-0161 | 9 | | RESISTOR 604 1% .125W F TC=0+-100 | 24546 | C4-1/8-T0-604R-F |
| A9R92 | 0698-4441 | 0 | | RESISTOR 3.74K 1% .125W F TC=0+-100 | 24546 | C4-1/8-T0-3741-F |
| A9R93 | 0698-4020 | 1 | 1 | RESISTOR 9.53K 1% .125W F TC=0+-100 | 24546 | C4-1/8-T0-9531-F |
| A9R94 | 0757-0435 | 0 | 3 | RESISTOR 3.92K 1% .125W F TC=0+-100 | 24546 | C4-1/8-T0-3921-F |
| A9R95 | 0757-0161 | 9 | | RESISTOR 604 1% .125W F TC=0+-100 | 24546 | C4-1/8-T0-604R-F |
| A9R96 | 0757-0435 | 0 | | RESISTOR 3.92K 1% .125W F TC=0+-100 | 24546 | C4-1/8-T0-3921-F |
| A9R97 | 0757-0280 | 3 | | RESISTOR 1K 1% .125W F TC=0+-100 | 24546 | C4-1/8-T0-1001-F |

See introduction to this section for ordering information
*Indicates factory selected value

## Table 6-3. Replaceable Parts (Cont'd).

| Reference Designation | HP Part Number | C D | Qty | Description | Mfr Code | Mfr Part Number |
|---|---|---|---|---|---|---|
| A11A1 | 03580-66531 | 3 | 1 | BOARD ASSEMBLY-HIGH VOLTAGE POWER SUPPLY | 28480 | 03580-66531 |
| A11A1C1 | 0150-0050 | 9 | 1 | CAPACITOR-FXD 1000PF +80-20% 1KVDC CER | 28480 | 0150-0050 |
| A11A1C2 | 0150-0012 | 3 | 3 | CAPACITOR-FXD .01UF +-20% 1KVDC CER | 56289 | C023A102J103M338 |
| A11A1C3 | 0150-0012 | 3 | | CAPACITOR-FXD .01UF +-20% 1KVDC CER | 56289 | C023A102J103M338 |
| A11A1C4 | 0160-3008 | 4 | 3 | CAPACITOR-FXD 4700PF +-20% 4KVDC CER | 28480 | 0160-3008 |
| A11A1C5 | 0160-3008 | 4 | | CAPACITOR-FXD 4700PF +-20% 4KVDC CER | 28480 | 0160-3008 |
| A11A1C6 | 0160-3008 | 4 | | CAPACITOR-FXD 4700PF +-20% 4KVDC CER | 28480 | 0160-3008 |
| A11A1CR1 | 1901-0033 | 2 | 7 | DIODE-GEN PRP 180V 200MA DO-7 | 28480 | 1901-0033 |
| A11A1CR2 | 1901-0033 | 2 | | DIODE-GEN PRP 180V 200MA DO-7 | 28480 | 1901-0033 |
| A11A1CR3 | 1901-0033 | 2 | | DIODE-GEN PRP 180V 200MA DO-7 | 28480 | 1901-0033 |
| A11A1CR4 | 1901-0033 | 2 | | DIODE-GEN PRP 180V 200MA DO-7 | 28480 | 1901-0033 |
| A11A1CR5 | 1901-0341 | 5 | 1 | DIODE-HV RECT 7.5KV 10MA 250NS | 28480 | 1901-0341 |
| A11A1R1 | 0757-0465 | 6 | 14 | RESISTOR 100K 1% .125W F TC=0+-100 | 24546 | C4-1/8-T0-1003-F |
| A11A1R2 | 2100-3358 | 3 | 1 | RESISTOR-TRMR 1M 20% C SIDE-ADJ 1-TRN | 28480 | 2100-3358 |
| A11A1R4 | 0683-1535 | 6 | 1 | RESISTOR 15K 5% .25W FC TC=-400/+800 | 01121 | CB1535 |
| A11A1R5 | 0683-3345 | 0 | 1 | RESISTOR 330K 5% .25W FC TC=-800/+900 | 01121 | CB3345 |
| A11A2 | 03580-66532 | 4 | 1 | BOARD ASSEMBLY-HIGH VOLTAGE POWER SUPPLY (DOES NOT INCLUDE A11A2T1) | 28480 | 03580-66532 |
| A11A2C1 | 0160-3859 | 3 | 2 | CAPACITOR-FXD 560PF +-20% 6KVDC CER | 28480 | 0160-3859 |
| A11A2C2 | 0160-3859 | 3 | | CAPACITOR-FXD 560PF +-20% 6KVDC CER | 28480 | 0160-3859 |
| A11A2C3 | 0150-0012 | 3 | | CAPACITOR-FXD .01UF +-20% 1KVDC CER | 56289 | C023A102J103M338 |
| A11A2C4 | 0160-3007 | 3 | 1 | CAPACITOR-FXD 4700PF +-20% 4KVDC CER | 28480 | 0160-3007 |
| A11A2C5 | 0160-2544 | 1 | 1 | CAPACITOR-FXD 270PF +-10% 1KVDC CER | 28480 | 0160-2544 |
| A11A2CR1 | 1902-3237 | 6 | 1 | DIODE-ZNR 20V 5% DO-35 PD=.4W TC=+.073% | 28480 | 1902-3237 |
| A11A2CR2 | 1902-3428 | 7 | 2 | DIODE-ZNR 100V 5% DO-7 PD=.4W TC=+.083% | 28480 | 1902-3428 |
| A11A2CR3 | 1902-3428 | 7 | | DIODE-ZNR 100V 5% DO-7 PD=.4W TC=+.083% | 28480 | 1902-3428 |
| A11A2CR4 | 1901-0033 | 2 | | DIODE-GEN PRP 180V 200MA DO-7 | 28480 | 1901-0033 |
| A11A2CR5 | 1901-0033 | 2 | | DIODE-GEN PRP 180V 200MA DO-7 | 28480 | 1901-0033 |
| A11A2CR6 | 1901-0033 | 2 | | DIODE-GEN PRP 180V 200MA DO-7 | 28480 | 1901-0033 |
| A11A2R1 | 0683-4725 | 2 | 2 | RESISTOR 4.7K 5% .25W FC TC=-400/+700 | 01121 | CB4725 |
| A11A2R2 | 0683-1065 | 7 | 1 | RESISTOR 10M 5% .25W FC TC=-900/+1100 | 01121 | CB1065 |
| A11A2R3 | 0683-1055 | 5 | 1 | RESISTOR 1M 5% .25W FC TC=-800/+900 | 01121 | CB1055 |
| A11A2R4 | 0683-4725 | 2 | | RESISTOR 4.7K 5% .25W FC TC=-400/+700 | 01121 | CB4725 |
| A11A2R5 | 0687-2751 | 8 | 1 | RESISTOR 2.7M 10% .5W CC TC=0+1000 | 01121 | EB2751 |
| A11A2R6 | 0698-8827 | 0 | 1 | RESISTOR 20M 10% 1W C TC=0+-250 | 28480 | 0698-8827 |
| A11A2T1 | 9100-3440 | | | HV TRANSFORMER | | |
| A13 | 03580-66513 | 1 | 1 | BOARD ASSEMBLY-DEFLECTION | 28480 | 03580-66513 |
| A13C1 | 0160-0168 | 1 | 1 | CAPACITOR-FXD .1UF +-10% 200VDC POLYE | 28480 | 0160-0168 |
| A13C2 | 0180-0291 | 3 | 2 | CAPACITOR-FXD 1UF+-10% 35VDC TA | 56289 | 150D105X9035A2 |
| A13C3 | 0180-0291 | 3 | | CAPACITOR-FXD 1UF+-10% 35VDC TA | 56289 | 150D105X9035A2 |
| A13CR1 | 1901-0040 | 1 | 12 | DIODE-SWITCHING 30V 50MA 2NS DO-35 | 28480 | 1901-0040 |
| A13CR2 | 1901-0040 | 1 | | DIODE-SWITCHING 30V 50MA 2NS DO-35 | 28480 | 1901-0040 |
| A13CR3 | 1901-0040 | 1 | | DIODE-SWITCHING 30V 50MA 2NS DO-35 | 28480 | 1901-0040 |
| A13CR4 | 1901-0040 | 1 | | DIODE-SWITCHING 30V 50MA 2NS DO-35 | 28480 | 1901-0040 |
| A13Q1 | 1854-0071 | 4 | 8 | TRANSISTOR NPN SI PD=310MW FT=100MHZ | 04713 | 2N5551 |
| A13Q2 | 1854-0071 | 4 | | TRANSISTOR NPN SI PD=310MW FT=100MHZ | 04713 | 2N5551 |
| A13Q3 | 1854-0071 | 4 | | TRANSISTOR NPN SI PD=310MW FT=100MHZ | 04713 | 2N5551 |
| A13Q4 | 1854-0071 | 4 | | TRANSISTOR NPN SI PD=310MW FT=100MHZ | 04713 | 2N5551 |
| A13Q5 | 1854-0071 | 7 | 5 | TRANSISTOR NPN SI PD=300MW FT=200MHZ | 28480 | 1854-0071 |
| A13Q6 | 1854-0071 | 7 | | TRANSISTOR NPN SI PD=300MW FT=200MHZ | 28480 | 1854-0071 |
| A13Q7 | 1854-0071 | 4 | | TRANSISTOR NPN SI PD=310MW FT=100MHZ | 04713 | 2N5551 |
| A13Q8 | 1854-0071 | 4 | | TRANSISTOR NPN SI PD=310MW FT=100MHZ | 04713 | 2N5551 |
| A13Q9 | 1854-0071 | 4 | | TRANSISTOR NPN SI PD=310MW FT=100MHZ | 04713 | 2N5551 |
| A13Q10 | 1854-0071 | 4 | | TRANSISTOR NPN SI PD=310MW FT=100MHZ | 04713 | 2N5551 |
| A13Q12 | 1854-0071 | 7 | | TRANSISTOR NPN SI PD=300MW FT=200MHZ | 28480 | 1854-0071 |
| A13Q13 | 1854-0071 | 7 | | TRANSISTOR NPN SI PD=300MW FT=200MHZ | 28480 | 1854-0071 |
| A13R1 | 2100-0558 | 9 | 2 | RESISTOR-TRMR 20K 10% C TOP-ADJ 1-TRN | 28480 | 2100-0558 |
| A13R2 | 2100-3252 | 6 | 2 | RESISTOR-TRMR 5K 10% C TOP-ADJ 1-TRN | 28480 | 2100-3252 |
| A13R3 | 2100-3253 | 7 | 1 | RESISTOR-TRMR 50K 10% C TOP-ADJ 1-TRN | 28480 | 2100-3253 |
| A13R4 | 2100-3252 | 6 | | RESISTOR-TRMR 5K 10% C TOP-ADJ 1-TRN | 28480 | 2100-3252 |
| A13R5 | 2100-0558 | 9 | | RESISTOR-TRMR 20K 10% C TOP-ADJ 1-TRN | 28480 | 2100-0558 |
| A13R6 | 0757-0469 | 0 | 8 | RESISTOR 150K 1% .125W F TC=0+-100 | 24546 | C4-1/8-T0-1503-F |
| A13R7 | 0757-0469 | 0 | | RESISTOR 150K 1% .125W F TC=0+-100 | 24546 | C4-1/8-T0-1503-F |
| A13R8 | 0757-0465 | 6 | | RESISTOR 100K 1% .125W F TC=0+-100 | 24546 | C4-1/8-T0-1003-F |
| A13R9 | 0757-0440 | 7 | 5 | RESISTOR 7.5K 1% .125W F TC=0+-100 | 24546 | C4-1/8-T0-7501-F |
| A13R11 | 0757-0442 | 9 | 14 | RESISTOR 10K 1% .125W F TC=0+-100 | 24546 | C4-1/8-T0-1002-F |
| A13R12 | 0757-0440 | 7 | | RESISTOR 7.5K 1% .125W F TC=0+-100 | 24546 | C4-1/8-T0-7501-F |
| A13R13 | 0757-0469 | 0 | | RESISTOR 150K 1% .125W F TC=0+-100 | 24546 | C4-1/8-T0-1503-F |
| A13R14 | 0757-0430 | 5 | 1 | RESISTOR 2.21K 1% .125W F TC=0+-100 | 24546 | C4-1/8-T0-2211-F |
| A13R15 | 0757-0429 | 2 | 1 | RESISTOR 1.82K 1% .125W F TC=0+-100 | 24546 | C4-1/8-T0-1821-F |
| A13R16 | 0757-0469 | 0 | | RESISTOR 150K 1% .125W F TC=0+-100 | 24546 | C4-1/8-T0-1503-F |

See introduction to this section for ordering information
*Indicates factory selected value

Replaceable Parts

## Table 6-3. Replaceable Parts (Cont'd).

| Reference Designation | HP Part Number | C D | Qty | Description | Mfr Code | Mfr Part Number |
|---|---|---|---|---|---|---|
| A13R17 | 0698-4481 | 8 | 2 | RESISTOR 16.5K 1% .125W F TC=0+-100 | 24546 | C4-1/8-T0-1652-F |
| A13R18 | 0698-4435 | 2 | 0 | RESISTOR 2.49K 1% .125W F TC=0+-100 | 24546 | C4-1/8-T0-2491-F |
| A13R19 | 0698-4435 | 2 | | RESISTOR 2.49K 1% .125W F TC=0+-100 | 24546 | C4-1/8-T0-2491-F |
| A13R21 | 0757-0469 | 0 | | RESISTOR 150K 1% .125W F TC=0+-100 | 24546 | C4-1/8-T0-1503-F |
| A13R22 | 0757-0469 | 0 | | RESISTOR 150K 1% .125W F TC=0+-100 | 24546 | C4-1/8-T0-1503-F |
| A13R23 | 0757-0465 | 6 | | RESISTOR 100K 1% .125W F TC=0+-100 | 24546 | C4-1/8-T0-1003-F |
| A13R24 | 0757-0440 | 7 | | RESISTOR 7.5K 1% .125W F TC=0+-100 | 24546 | C4-1/8-T0-7501-F |
| A13R25 | 0757-0442 | 9 | | RESISTOR 10K 1% .125W F TC=0+-100 | 24546 | C4-1/8-T0-1002-F |
| A13R26 | 0757-0440 | 7 | | RESISTOR 7.5K 1% .125W F TC=0+-100 | 24546 | C4-1/8-T0-7501-F |
| A13R27 | 0757-0469 | 0 | | RESISTOR 150K 1% .125W F TC=0+-100 | 24546 | C4-1/8-T0-1503-F |
| A13R28 | 0757-0469 | 0 | | RESISTOR 150K 1% .125W F TC=0+-100 | 24546 | C4-1/8-T0-1503-F |
| A13R29 | 0757-0449 | 6 | 3 | RESISTOR 20K 1% .125W F TC=0+-100 | 24546 | C4-1/8-T0-2002-F |
| A13R31 | 0698-3484 | 9 | 1 | RESISTOR 6.65K 1% .125W F TC=0+-100 | 24546 | C4-1/8-T0-6651-F |
| A13R32 | 0698-4481 | 8 | | RESISTOR 16.5K 1% .125W F TC=0+-100 | 24546 | C4-1/8-T0-1652-F |
| A13R33 | 0698-4435 | 2 | | RESISTOR 2.49K 1% .125W F TC=0+-100 | 24546 | C4-1/8-T0-2491-F |
| A13R34 | 0698-4435 | 2 | | RESISTOR 2.49K 1% .125W F TC=0+-100 | 24546 | C4-1/8-T0-2491-F |
| A13R35 | 0757-0467 | 8 | 3 | RESISTOR 121K 1% .125W F TC=0+-100 | 24546 | C4-1/8-T0-1213-F |
| A13R36 | 0757-0467 | 8 | | RESISTOR 121K 1% .125W F TC=0+-100 | 24546 | C4-1/8-T0-1213-F |
| A13R37 ** | 0757-0401 | | | RESISTOR 100 1% .125W F | 28480 | 0757-0401 |
| A13R38 ** | 0757-0401 | | | RESISTOR 100 1% .125W F | 28480 | 0757-0401 |
| A13R39 ** | 2100-3210 | | | RESISTOR 10K 1% .125W F | 28480 | 2100-3210 |
| A13S1 | 3101-1162 | 6 | 1 | SWITCH-SLIDE SPDT NS | 28480 | 3101-1162 |
| | 1251-3378 | 5 | 1 | CONNECTOR 10-PIN W POST TYPE | 28480 | 1251-3378 |
| A14 | 03580-66534 | 6 | 1 | BOARD ASSEMBLY-BANDWIDTH SWITCH | 28480 | 03580-66534 |
| A14C6 | 0180-0197 | 8 | 1 | CAPACITOR-FXD 2.2UF+-10% 20VDC TA | 56289 | 150D225X9020A2 |
| A14C5 | 0180-0373 | 2 | 1 | CAPACITOR-FXD .68UF+-10% 35VDC TA | 56289 | 150D684X9035A2 |
| A14C6 | 0180-1735 | 2 | 1 | CAPACITOR-FXD .22UF+-10% 35VDC TA | 56289 | 150D224X9035A2 |
| A14C7 | 0180-2050 | 6 | 1 | CAPACITOR-FXD .082UF+-10% 35VDC TA | 56289 | 150D823X9035A2 |
| A14C8 | 0180-1701 | 2 | 1 | CAPACITOR-FXD 6.8UF+-20% 6VDC TA | 56289 | 150D685X0006A2 |
| A14C9 | 0160-0162 | 5 | 1 | CAPACITOR-FXD .022UF +-10% 200VDC POLYE | 28480 | 0160-0162 |
| A14J1 | 1251-0561 | 2 | 2 | CONNECTOR 34-PIN F POST TYPE | 28480 | 1251-0561 |
| A14Q1 | 1855-0081 | 1 | 3 | TRANSISTOR J-FET N-CHAN D-MODE SI | 01295 | 2N5245 |
| A14R1 | 0698-3453 | 2 | 1 | RESISTOR 196K 1% .125W F TC=0+-100 | 24546 | C4-1/8-T0-1963-F |
| A14R2 | 0698-4488 | 5 | 1 | RESISTOR 26.7K 1% .125W F TC=0+-100 | 24546 | C4-1/8-T0-2672-F |
| A14R3 | 0698-3558 | 8 | 1 | RESISTOR 4.02K 1% .125W F TC=0+-100 | 24546 | C4-1/8-T0-4021-F |
| A14R4 | 0698-3519 | 1 | 2 | RESISTOR 12.4K 1% .125W F TC=0+-100 | 24546 | C4-1/8-T0-1242-F |
| A14R5 | 0698-3228 | 9 | 6 | RESISTOR 49.9K 1% .125W F TC=0+-100 | 28480 | 0698-3228 |
| A14R6 | 0757-0473 | 6 | 1 | RESISTOR 221K 1% .125W F TC=0+-100 | 24546 | C4-1/8-T0-2213-F |
| A14R7 | 0684-1051 | 3 | 1 | RESISTOR 1M 10% .25W FC TC=-800/+900 | 01121 | CB1051 |
| A14R8 | 0684-2251 | 7 | 1 | RESISTOR 2.2M 10% .25W FC TC=-900/+1100 | 01121 | CB2251 |
| A14R9 | 0684-1041 | 1 | 1 | RESISTOR 100K 10% .25W FC TC=-400/+800 | 01121 | CB1041 |
| A14R10 | 0684-3941 | 4 | 1 | RESISTOR 390K 10% .25W FC TC=-800/+900 | 01121 | CB3941 |
| A14R11 | 0698-5102 | 2 | 1 | RESISTOR 1.2M 10% .25W FC TC=-900/+1100 | 01121 | CB1251 |
| A14R12 | 0698-4443 | 2 | 1 | RESISTOR 4.53K 1% .125W F TC=0+-100 | 24546 | C4-1/8-T0-4531-F |
| A14R13 | 0757-0454 | 3 | 1 | RESISTOR 33.2K 1% .125W F TC=0+-100 | 24546 | C4-1/8-T0-3322-F |
| A14R14 | 0698-4506 | 8 | 1 | RESISTOR 73.2K 1% .125W F TC=0+-100 | 24546 | C4-1/8-T0-7322-F |
| A14R15 | 0698-3459 | 8 | 1 | RESISTOR 383K 1% .125W F TC=0+-100 | 28480 | 0698-3459 |
| A14R16 | 0698-4524 | 0 | 3 | RESISTOR 174K 1% .125W F TC=0+-100 | 24546 | C4-1/8-T0-1743-F |
| A14R17 | 0757-0442 | 9 | | RESISTOR 10K 1% .125W F TC=0+-100 | 24546 | C4-1/8-T0-1002-F |
| A14R18 | 0698-3441 | 8 | 1 | RESISTOR 215 1% .125W F TC=0+-100 | 24546 | C4-1/8-T0-2150-F |
| A14R19 | 0698-4427 | 2 | 1 | RESISTOR 1.65K 1% .125W F TC=0+-100 | 24546 | C4-1/8-T0-1651-F |
| A14R20 | 0698-4511 | 5 | 3 | RESISTOR 86.6K 1% .125W F TC=0+-100 | 24546 | C4-1/8-T0-8662-F |
| A14R21 | 0757-0456 | 5 | 2 | RESISTOR 43.2K 1% .125W F TC=0+-100 | 24546 | C4-1/8-T0-4322-F |
| A14R22 | 0757-0446 | 3 | 1 | RESISTOR 15K 1% .125W F TC=0+-100 | 24546 | C4-1/8-T0-1502-F |
| A14R31 | 0698-4511 | 5 | | RESISTOR 86.6K 1% .125W F TC=0+-100 | 24546 | C4-1/8-T0-8662-F |
| A14R32 | 0698-4500 | 2 | 2 | RESISTOR 57.6K 1% .125W F TC=0+-100 | 24546 | C4-1/8-T0-5762-F |
| A14R33 | 0757-0456 | 5 | | RESISTOR 43.2K 1% .125W F TC=0+-100 | 24546 | C4-1/8-T0-4322-F |
| A14R34 | 0757-0123 | 3 | 1 | RESISTOR 34.8K 1% .125W F TC=0+-100 | 28480 | 0757-0123 |
| A14R35 | 0698-3455 | 4 | 2 | RESISTOR 261K 1% .125W F TC=0+-100 | 24546 | C4-1/8-T0-2613-F |
| A14R36 | 0757-0468 | 9 | 1 | RESISTOR 130K 1% .125W F TC=0+-100 | 24546 | C4-1/8-T0-1303-F |
| A14R37 | 0698-7802 | 3 | 2 | RESISTOR 523K 1% .125W F TC=0+-100 | 28480 | 0698-7802 |
| A14R38 | 0757-0272 | 3 | 1 | RESISTOR 52.3K 1% .125W F TC=0+-100 | 24546 | C4-1/8-T0-5232-F |
| A14R39 | 0698-4502 | 4 | 1 | RESISTOR 64.9K 1% .125W F TC=0+-100 | 24546 | C4-1/8-T0-6492-F |
| A14R41 | 0698-3215 | 4 | 1 | RESISTOR 499K 1% .125W F TC=0+-100 | 28480 | 0698-3215 |
| A14R42 | 0698-3228 | 9 | | RESISTOR 49.9K 1% .125W F TC=0+-100 | 28480 | 0698-3228 |
| A14R43 | 0698-3279 | 0 | 2 | RESISTOR 4.99K 1% .125W F TC=0+-100 | 24546 | C4-1/8-T0-4991-F |
| A14R44 | 0698-4524 | 0 | | RESISTOR 174K 1% .125W F TC=0+-100 | 24546 | C4-1/8-T0-1743-F |
| A14R60 | 0757-0427 | 0 | 1 | RESISTOR 1.5K 1% .125W F TC=0+-100 | 24546 | C4-1/8-T0-1501-F |
| A14S1 | 03580-61901 | 1 | 1 | SWITCH ASSEMBLY | 28480 | 03580-61901 |
| A14S2 | 03580-61907 | 7 | 1 | SWITCH ASSEMBLY | 28480 | 03580-61907 |

See introduction to this section for ordering information
*Indicates factory selected value
**Use for units that do not contain A40 assembly. Δ21

Replaceable Parts

## Table 6-3. Replaceable Parts (Cont'd).

| Reference Designation | HP Part Number | C D | Qty | Description | Mfr Code | Mfr Part Number |
|---|---|---|---|---|---|---|
| A15 | 03580-66535 | 7 | 1 | BOARD ASSEMBLY-SWEEP SWITCH | 28480 | 03580-66535 |
| A15CR1 | 1901-0040 | 1 | | DIODE-SWITCHING 30V 50MA 2NS DO-35 | 28480 | 1901-0040 |
| A15CR2 | 1901-0461 | 0 | 1 | DIODE-SCHOTTKY DO-35 | 28480 | HSCH-1001 |
| A15CR3 | 1990-0486 | 6 | 1 | LED-VISIBLE LUM-INT=1MCD IF=20MA-MAX | 28480 | 5082-4684 |
| A15CR4 | 1990-0487 | 7 | 1 | LED-VISIBLE LUM-INT=1MCD IF=20MA-MAX | 28480 | 5082-4584 |
| A15CR5 | 1990-0485 | 5 | 1 | LED-VISIBLE LUM-INT=800UCD IF=30MA-MAX | 28480 | 5082-4984 |
| A15J1 | 1251-0561 | 2 | | CONNECTOR 30-PIN F POST TYPE | 28480 | 1251-0561 |
| A15J2 | 03580-61613 | 2 | 1 | CABLE ASSEMBLY | 28480 | 03580-61613 |
| A15Q1 | 1854-0215 | 1 | 1 | TRANSISTOR NPN SI PD=350MW FT=300MHZ | 04713 | 2N3904 |
| A15Q2 | 1855-0081 | 1 | | TRANSISTOR J-FET N-CHAN D-MODE SI | 01295 | 2N5245 |
| A15Q3 | 1855-0081 | 1 | | TRANSISTOR J-FET N-CHAN D-MODE SI | 01295 | 2N5245 |
| A15Q4 | 1853-0036 | 2 | 5 | TRANSISTOR PNP SI PD=310MW FT=250MHZ | 28480 | 1853-0036 |
| A15R1 | 0698-7802 | 3 | | RESISTOR 523K 1% .125W F TC=0+-100 | 28480 | 0698-7802 |
| A15R2 | 0757-0403 | 2 | 1 | RESISTOR 121 1% .125W F TC=0+-100 | 24546 | C4-1/8-T0-121R-F |
| A15R3 | 0757-0410 | 1 | 1 | RESISTOR 301 1% .125W F TC=0+-100 | 24546 | C4-1/8-T0-301R-F |
| A15R4 | 0757-0161 | 9 | 1 | RESISTOR 604 1% .125W F TC=0+-100 | 24546 | C4-1/8-T0-604R-F |
| A15R5 | 0757-0274 | 5 | 1 | RESISTOR 1.21K 1% .125W F TC=0+-100 | 24546 | C4-1/8-T0-1213-F |
| A15R6 | 0757-0273 | 4 | 2 | RESISTOR 3.01K 1% .125W F TC=0+-100 | 24546 | C4-1/8-T0-3011-F |
| A15R7 | 0698-3497 | 4 | 2 | RESISTOR 6.04K 1% .125W F TC=0+-100 | 24546 | C4-1/8-T0-604R-F |
| A15R8 | 0757-0444 | 1 | 2 | RESISTOR 12.1K 1% .125W F TC=0+-100 | 24546 | C4-1/8-T0-1212-F |
| A15R9 | 0757-0453 | 2 | 1 | RESISTOR 30.1K 1% .125W F TC=0+-100 | 24546 | C4-1/8-T0-3012-F |
| A15R10 | 0698-3572 | 6 | 1 | RESISTOR 60.4K 1% .125W F TC=0+-100 | 24546 | C4-1/8-T0-6042-F |
| A15R11 | 0757-0467 | 8 | | RESISTOR 121K 1% .125W F TC=0+-100 | 24546 | C4-1/8-T0-1213-F |
| A15R12 | 0698-3499 | 6 | 1 | RESISTOR 40.2K 1% .125W F TC=0+-100 | 24546 | C4-1/8-T0-4022-F |
| A15R13 | 0698-3497 | 4 | | RESISTOR 6.04K 1% .125W F TC=0+-100 | 24546 | C4-1/8-T0-604R-F |
| A15R14 | 0757-0442 | 9 | | RESISTOR 10K 1% .125W F TC=0+-100 | 24546 | C4-1/8-T0-1002-F |
| A15R15 | 0757-0444 | 1 | | RESISTOR 12.1K 1% .125W F TC=0+-100 | 24546 | C4-1/8-T0-1212-F |
| A15R16 | 0698-5572 | 0 | 2 | RESISTOR 12.5K .5% .125W F TC=0+-100 | 24546 | C4-1/8-T0-1252-D |
| A15R17 | 0698-5572 | 0 | | RESISTOR 12.5K .5% .125W F TC=0+-100 | 24546 | C4-1/8-T0-1252-D |
| A15R18 | 0757-0442 | 9 | | RESISTOR 10K 1% .125W F TC=0+-100 | 24546 | C4-1/8-T0-1002-F |
| A15R19 | 2100-0668 | 2 | 1 | RESISTOR-VAR CONTROL CC 10K 10% LIN | 28480 | 2100-0668 |
| A15R20 | 0698-3519 | 1 | | RESISTOR 12.4K 1% .125W F TC=0+-100 | 24546 | C4-1/8-T0-1242-F |
| A15R21 | 0698-6758 | 6 | 1 | RESISTOR 12.5K .5% .125W F TC=0+-50 | 24546 | NC4-1/8-T2-1252-D |
| A15R22 | 0698-5580 | 0 | 1 | RESISTOR 25K .5% .125W F TC=0+-100 | 24546 | C4-1/8-T0-2502-D |
| A15R23 | 0698-5573 | 1 | 1 | RESISTOR 50K .5% .125W F TC=0+-100 | 24546 | C4-1/8-T0-5002-D |
| A15R24 | 0698-6292 | 3 | 1 | RESISTOR 125K .5% .125W F TC=0+-100 | 28480 | 0698-6292 |
| A15R25 | 0698-5581 | 1 | 1 | RESISTOR 250K .5% .125W F TC=0+-100 | 19701 | MFAC1/8-T0-2503-D |
| A15R30 | 0757-0486 | 1 | 1 | RESISTOR 750K 1% .125W F TC=0+-100 | 28480 | 0757-0486 |
| A15R31 | 0698-4489 | 6 | 1 | RESISTOR 28K 1% .125W F TC=0+-100 | 24546 | C4-1/8-T0-2802-F |
| A15R32 | 0698-3351 | 0 | 1 | RESISTOR 3.3M 10% .25W FC TC=-900/+1100 | 01121 | CB3351 |
| A15R01 | 0698-4524 | 0 | | RESISTOR 174K 1% .125W F TC=0+-100 | 24546 | C4-1/8-T0-1743-F |
| A15R02 | 0698-3455 | 4 | | RESISTOR 261K 1% .125W F TC=0+-100 | 24546 | C4-1/8-T0-2613-F |
| A15R43 | 0698-4500 | 2 | | RESISTOR 57.6K 1% .125W F TC=0+-100 | 24546 | C4-1/8-T0-5762-F |
| A15R44 | 0698-4511 | 5 | | RESISTOR 86.6K 1% .125W F TC=0+-100 | 24546 | C4-1/8-T0-8662-F |
| A15R50 | 0757-0442 | 9 | | RESISTOR 10K 1% .125W F TC=0+-100 | 24546 | C4-1/8-T0-1002-F |
| A15R51 | 0757-0442 | 9 | | RESISTOR 10K 1% .125W F TC=0+-100 | 24546 | C4-1/8-T0-1002-F |
| A15R53 | 0698-3160 | 8 | 1 | RESISTOR 31.6K 1% .125W F TC=0+-100 | 24546 | C4-1/8-T0-3162-F |
| A16R64 | 0683-1045 | | 1 | RESISTOR 100K 5% .125W F | 28480 | 0683-1045 |
| A15R65 | 0698-7332 | | 1 | RESISTOR 1M 1% .25W F | 28480 | 0698-7332 |
| A15R80 | 0698-3446 | | | RESISTOR 383 1% .125W F | 28480 | 0698-3446 |
| A15R81 | 0757-0442 | 9 | | RESISTOR 10K 1% .125W F TC=0+-100 | 24546 | C4-1/8-T0-1002-F |
| A15R82 | 0698-3557 | 7 | | RESISTOR 806 1% .125W F TC=0+-100 | 24546 | C4-1/8-T0-806R-F |
| A15R83 | 0698-4123 | 5 | 1 | RESISTOR 499 1% .125W F TC=0+-100 | 24546 | C4-1/8-T0-499R-F |
| A15R84 | 0698-3152 | 8 | 1 | RESISTOR 3.48K 1% .125W F TC=0+-100 | 24546 | C4-1/8-T0-3481-F |
| A15S1 | 03580-61903 | 3 | 1 | SWITCH ASSEMBLY-SPAN | 28480 | 03580-61903 |
| A15S2 | 03580-61908 | 8 | 1 | SWITCH ASSEMBLY-MODE | 28480 | 03580-61908 |
| A15S3 | 3101-0199 | 7 | 1 | SWITCH-SL DPDT MINTR .5A 125VAC/DC | 28480 | 3101-0199 |
| A15U1 | 1826-0043 | 4 | 3 | IC OP AMP GP TO-99 | 01928 | CA3077 |
| A15U2 | 1826-0043 | 4 | | IC OP AMP GP TO-99 | 01928 | CA3077 |
| A16 | 03580-66536 | 8 | 1 | BOARD ASSEMBLY-PCM | 28480 | 03580-66536 |
| A16C1 | 0180-0104 | 7 | 2 | CAPACITOR-FXD 200UF+75-10% 16VDC AL | 56289 | 30D207G016DF2 |
| A16C2 | 0180-0104 | 7 | | CAPACITOR-FXD 200UF+75-10% 16VDC AL | 56289 | 30D207G016DF2 |
| A16C3 | 0160-0571 | 8 | 7 | CAPACITOR-FXD .1UF +80-20% 50VDC CER | 28480 | 0160-0571 |
| A16C30 | 0160-2672 | 6 | 1 | CAPACITOR-FXD .047UF +-5% 80VDC POLYE | 28480 | 0160-2672 |
| A16C34 | 0180-0106 | 9 | 1 | CAPACITOR-FXD 60UF+-20% 6VDC TA | 56289 | 150D606X0006B2 |
| A16C35 | 0180-0339 | 0 | 1 | CAPACITOR-FXD 50UF+75-10% 16VDC AL | 56289 | 30D506G016CB2 |
| A16C40 | 0160-4532 | 1 | 1 | CAPACITOR-FXD 1000PF +-20% 50VDC CER | 28480 | 0160-4532 |
| A16C41 | 0160-0571 | 8 | | CAPACITOR-FXD .1UF +80-20% 50VDC CER | 28480 | 0160-0571 |

See introduction to this section for ordering information
*Indicates factory selected value

Replaceable Parts

## Table 6-3. Replaceable Parts (Cont'd).

| Reference Designation | HP Part Number | C D | Qty | Description | Mfr Code | Mfr Part Number |
|---|---|---|---|---|---|---|
| A16C43 | 0160-4571 | 8 | | CAPACITOR-FXD .1UF +80-20% 50VDC CER | 28480 | 0160-4571 |
| A16C44 | 0160-4571 | | | CAPACITOR-FXD .1UF +80-20% 50VDC | 28480 | 0160-4571 |
| A16C45 | 0160-4571 | 5 | 1 | CAPACITOR-FXD .1UF +80-20% 50VDC | 28480 | 0160-4571 |
| A16CR2 | 1901-0040 | 1 | | DIODE-SWITCHING 30V 50MA 2NS DO-35 | 28480 | 1901-0040 |
| A16CR3 | 1901-0040 | 1 | | DIODE-SWITCHING 30V 50MA 2NS DO-35 | 28480 | 1901-0040 |
| A16CR4 | 1901-0040 | 1 | | DIODE-SWITCHING 30V 50MA 2NS DO-35 | 28480 | 1901-0040 |
| A16CR5 | 1901-0040 | 1 | | DIODE-SWITCHING 30V 50MA 2NS DO-35 | 28480 | 1901-0040 |
| A16CR6 | 1901-0040 | 1 | | DIODE-SWITCHING 30V 50MA 2NS DO-35 | 28480 | 1901-0040 |
| A16CR7 | 1901-0040 | 1 | | DIODE-SWITCHING 30V 50MA 2NS DO-35 | 28480 | 1901-0040 |
| A16CR30 | 1901-0040 | 1 | | DIODE-SWITCHING 30V 50MA 2NS DO-35 | 28480 | 1901-0040 |
| A16CR31 | 1901-0040 | 1 | | DIODE-SWITCHING 30V 50MA 2NS DO-35 | 28480 | 1901-0040 |
| A16CR32 | 1902-0777 | 3 | 1 | DIODE-ZNR 1N825 6.2V 5% DO-7 PD=.4W | 04713 | 1N825 |
| A16L1 | 9100-1648 | 3 | 1 | INDUCTOR#-CH-MLD 330UH 5% .20X.45LG | 28480 | 9100-1648 |
| A16L2 | 9100-0541 | 7 | 1 | INDUCTOR#-CH-MLD 250UH 10% .250X.5LG | 28480 | 9100-0541 |
| A16J1 | 1855-0386 | 9 | 1 | TRANSISTOR J-FET 2N4392 N-CHAN D-MODE | 04713 | 2N4392 |
| A16J2 | 1854-0071 | 7 | | TRANSISTOR NPN SI PD=300MW FT=200MHZ | 28480 | 1854-0071 |
| A16J3 | 1853-0036 | 2 | | TRANSISTOR PNP SI PD=310MW FT=250MHZ | 28480 | 1853-0036 |
| A16J4 | 1853-0036 | 2 | | TRANSISTOR PNP SI PD=310MW FT=250MHZ | 28480 | 1853-0036 |
| A16J5 | 1853-0036 | 2 | | TRANSISTOR PNP SI PD=310MW FT=250MHZ | 28480 | 1853-0036 |
| A16R2 | 0757-0472 | 5 | 1 | RESISTOR 200K 1% .125W F TC=0+-100 | 24546 | C4-1/8-T0-2003-F |
| A16R3 | 0757-0449 | 6 | | RESISTOR 20K 1% .125W F TC=0+-100 | 24546 | C4-1/8-T0-2002-F |
| A16R4 | 0757-0273 | 4 | | RESISTOR 3.01K 1% .125W F TC=0+-100 | 24546 | C4-1/8-T0-3011-F |
| A16R5 | 0757-0465 | 6 | | RESISTOR 100K 1% .125W F TC=0+-100 | 24546 | C4-1/8-T0-1003-F |
| A16R6 | 0757-0465 | 6 | | RESISTOR 100K 1% .125W F TC=0+-100 | 24546 | C4-1/8-T0-1003-F |
| A16R7 | 0757-0463 | 4 | 2 | RESISTOR 82.5K 1% .125W F TC=0+-100 | 24546 | C4-1/8-T0-8252-F |
| A16R8 | 0698-3493 | 0 | 1 | RESISTOR 4.12K 1% .125W F TC=0+-100 | 24546 | C4-1/8-T0-4121-F |
| A16R9 | 0757-0457 | 6 | 1 | RESISTOR 47.5K 1% .125W F TC=0+-100 | 24546 | C4-1/8-T0-4752-F |
| A16R10 | 0698-3228 | 9 | | RESISTOR 49.9K 1% .125W F TC=0+-100 | 28480 | 0698-3228 |
| A16R11 | 0757-0465 | 6 | | RESISTOR 100K 1% .125W F TC=0+-100 | 24546 | C4-1/8-T0-1003-F |
| A16R12 | 0757-0463 | 4 | | RESISTOR 82.5K 1% .125W F TC=0+-100 | 24546 | C4-1/8-T0-8252-F |
| A16R13 | 0757-0465 | 6 | | RESISTOR 100K 1% .125W F TC=0+-100 | 24546 | C4-1/8-T0-1003-F |
| A16R14 | 0683-1555 | 0 | 1 | RESISTOR 1.5M 5% .25W FC TC=-900/+1100 | 01121 | CB1555 |
| A16R15 | 0757-0465 | 6 | | RESISTOR 100K 1% .125W F TC=0+-100 | 24546 | C4-1/8-T0-1003-F |
| A16R16 | 0698-3157 | 3 | 1 | RESISTOR 19.6K 1% .125W F TC=0+-100 | 24546 | C4-1/8-T0-1962-F |
| A16R17 | 0683-2235 | 5 | 1 | RESISTOR 22K 5% .25W FC TC=-400/+800 | 01121 | CB2235 |
| A16R18 | 0698-3557 | 7 | | RESISTOR 806 1% .125W F TC=0+-100 | 24546 | C4-1/8-T0-806R-F |
| A16R21 | 0757-0465 | 6 | | RESISTOR 100K 1% .125W F TC=0+-100 | 24546 | C4-1/8-T0-1003-F |
| A16R22 | 0757-0465 | 6 | | RESISTOR 100K 1% .125W F TC=0+-100 | 24546 | C4-1/8-T0-1003-F |
| A16R23 | 0698-3228 | 9 | | RESISTOR 49.9K 1% .125W F TC=0+-100 | 28480 | 0698-3228 |
| A16R24 | 0757-0465 | 6 | | RESISTOR 100K 1% .125W F TC=0+-100 | 24546 | C4-1/8-T0-1003-F |
| A16R25 | 0757-0442 | | | RESISTOR 10K 1% .125W F | 28480 | 0757-0442 |
| A16R26 | 0683-1535 | | | RESISTOR 15K 5% .25W F | 28480 | 0683-1535 |
| A16R30 | 0757-0440 | 7 | | RESISTOR 7.5K 1% .125W F TC=0+-100 | 24546 | C4-1/8-T0-7501-F |
| A16R31 | 0757-0449 | 6 | | RESISTOR 20K 1% .125W F TC=0+-100 | 24546 | C4-1/8-T0-2002-F |
| A16R32 | 0757-0415 | 6 | 9 | RESISTOR 475 1% .125W F TC=0+-100 | 24546 | C4-1/8-T0-475R-F |
| A16R33 | 0698-3382 | 6 | 1 | RESISTOR 5.49K 1% .125W F TC=0+-100 | 24546 | C4-1/8-T0-5491-F |
| A16R34 | 0698-5673 | 2 | 1 | RESISTOR 3.9K 1% .125W F TC=0+-25 | 28480 | 0698-5673 |
| A16R35 | 0698-3279 | 0 | | RESISTOR 4.99K 1% .125W F TC=0+-100 | 24546 | C4-1/8-T0-4991-F |
| A16R36 | 0757-0407 | 6 | 1 | RESISTOR 200 1% .125W F TC=0+-100 | 24546 | C4-1/8-T0-201-F |
| A16R40 | 0698-3228 | 9 | | RESISTOR 49.9K 1% .125W F TC=0+-100 | 28480 | 0698-3228 |
| A16R41 | 0698-7332 | 4 | 2 | RESISTOR 1M 1% .125W F TC=0+-100 | 28480 | 0698-7332 |
| A16R42 | 0757-0199 | 3 | 1 | RESISTOR 21.5K 1% .125W F TC=0+-100 | 24546 | C4-1/8-T0-2152-F |
| A16R43 | 0698-7332 | 4 | | RESISTOR 1M 1% .125W F TC=0+-100 | 28480 | 0698-7332 |
| A16R45 | 0698-4502 | 2 | 1 | RESISTOR 453K 1% .125W F TC=0+-100 | 28480 | 0698-4502 |
| A16R50 | 0698-3228 | 9 | | RESISTOR 49.9K 1% .125W F TC=0+-100 | 28480 | 0698-3228 |
| A16R51 | 0757-0442 | 0 | | RESISTOR 10K 1% .125W F TC=0+-100 | 24546 | C4-1/8-T0-1002-F |
| A16R52 | 2100-3352 | 7 | 1 | RESISTOR-TRMR 1K 10% C SIDE-ADJ 1-TRN | 28480 | 2100-3352 |
| A16R53 | 0698-7332 | | | RESISTOR 1M 1% .125W F | 28480 | 0698-7332 |
| A16R54 | 0757-0442 | | | RESISTOR 10K 1% .125W F | 28480 | 0757-0442 |
| A16U1 | 1826-0043 | 4 | 1 | IC OP AMP GP TO-99 | 01928 | CA3077 |
| A16U2 | 1826-0759 | | 2 | IC COMPARATOR GP QUAD 14-DIP-P | 01295 | IC339 |
| A16U8 | 1826-0364 | 0 | 1 | IC OP AMP TO-99 | 27014 | LF355H |
| A16U9 | 1826-0561 | 0 | 2 | IC OP AMP OPO2CJ | 27014 | LF355H |
| A16W1 | 03580-61612 | 1 | | CABLE ASSEMBLY | 28480 | 03580-61612 |
| A16W2 | 03580-61612 | 3 | 1 | CABLE ASSEMBLY | 28480 | 03580-61612 |
| A16J1 | 1251-5240 | 4 | | CONNECTOR 20-PIN M POST TYPE | 28480 | 1251-5240 |

Replaceable Parts

## Table 6-3. Replaceable Parts (Cont'd).

| Reference Designation | HP Part Number | C D | Qty | Description | Mfr Code | Mfr Part Number |
|---|---|---|---|---|---|---|
| A18 Δ1 | 03581-66518 | | 1 | BOARD ASSY: INPUT, BALANCED (FOR OPTION 002 ONLY) | 28480 | 03580-66518 |
| A18C1 | 0180-0091 | | 2 | C:FXD 10UF +50 -10% 100 VDC AL | 56289 | 30D106F100DC2 |
| A18C4 | 0180-0091 | | | C:FXD 10UF +50 -10% 100 VDC AL | 56289 | 30D106F100DC2 |
| A18C5 | 0160-2206 | | | C:FXD 160PF 5% 300 VDCW | 28480 | 0160-2206 |
| A18C6 | 0140-0204 | | 1 | C:FXD 47PF 5% 500 VDCW | 72136 | DM15E470J0500WV1CR |
| A18J1 | 1251-2969 | | | CONN:PHONO, SINGLE JACK | 27264 | 15-24-0501 |
| A18J2 | 1251-3638 | | 1 | CONN:POST TYPE | 27264 | 09-65-1061 |
| A18R1 | 0698-4882 | | 1 | R:FXD 976 OHM 1% .5 W F TUBULAR | 24546 | NA6 |
| A18R2 | 0698-5874 | | 1 | R:FXD 639 OHM 1% .5 W F TUBULAR | 24546 | NA6 |
| A18R3* | 0757-0284 | | 1 | R:FXD 150 OHM 1% .125 W F TUBULAR FACTORY SELECTED PART | 24546 | C4-1/8-TO-151-F |
| A18R4 | 0757-0472 | | 1 | F:FXD 200K 1% .125 W F TUBULAR | 24546 | C4-1/8-TO-2003-F |
| A18R5 | 0698-4308 | | | F:FXD 16.9K 1% .125 W F TUBULAR | 16299 | C4-1/8-TO 1692-F |
| A18T1 | 9100-1460 | | 1 | TRANSFORMER AUDIO | 28480 | 9100-1460 |
| A20 | 0960-0505 | | 1 | POWER INPUT MODULE | 28480 | 0960-0444 |
| A33 | 03580-66533 | 5 | 1 | BOARD ASSEMBLY-DISPLAY, FCM | 28480 | 03580-66533 |
| A33C1 | 0160-4571 | 8 | | CAPACITOR-FXD .1UF +80 -20% 50 VDC CER | 28480 | 0160-4571 |
| A33C2 | 0160-5104 | 5 | 1 | CAPACITOR-FXD 3.9PF 5% | 28480 | 0160-5104 |
| A33C4 | 0160-2205 | 1 | 1 | CAPACITOR-FXD 120PF +-5% 300 VDC MICA | 28480 | 0160-2205 |
| A33C5 | 0160-4571 | 8 | | CAPACITOR-FXD .2UF +80 -20% 50 VDC CER | 28480 | 0160-4571 |
| A33CR1 | 1901-0841 | 0 | 1 | DIO-SI .05A 30V | 28480 | 1901-0841 |
| A33L1 | 9100-1650 | 1 | 1 | INDUCTOR RF-CH-MLD 680 UH 5% .2DX.45LG | 28480 | 9100-1650 |
| A33Q1 | 1853-0036 | 2 | | TRANSISTOR PNP SI PD=310 MW FT=250 MHZ | 28480 | 1853-0036 |
| A33R1 | 0698-4517 | 1 | 1 | RESISTOR 127K 1% .125 W F TC=0+-100 | 24546 | C4-1/8-TO-1273-F |
| A33R2 | 0757-0465 | 6 | | RESISTOR 100K 1% .125 W F TC=0+-100 | 24546 | C4-1/8-TO-1003-F |
| A33R3 | 0757-0465 | 6 | | RESISTOR 100K 1% .125 W F TC=0+-100 | 24546 | C4-1/8-TO-1003-F |
| A33R4 | 0757-0401 | 0 | 3 | RESISTOR 100 1% .125 W F TC=0+-100 | 24546 | C4-1/8-TO-101-F |
| A33R5 | 0757-0435 | 0 | 1 | RESISTOR 3.92K 1% .125 W F TC=0+-100 | 24546 | C4-1/8-TO-3921-F |
| A33R6 | 0757-0401 | 0 | | RESISTOR 100 1% .125 W F TC=0+-100 | 24546 | C4-1/8-TO-101-F |
| A33R7 | 0698-3557 | 7 | | RESISTOR 806 1% .125 W F TC=0+-100 | 24546 | C4-1/8-TO-806R-F |
| A33R8 | 0698-3149 | 3 | 1 | RESISTOR 255K 1% .125 W F TC=0+-100 | 24546 | C4-1/8-TO-2553-F |
| A33R9 | 0757-0401 | 1 | | RESISTOR 100 1% .125 W F TC=0+-100 | 24546 | C4-1/8-TO-101-F |
| A33R10 | 0757-0442 | 9 | | RESISTOR 10K 1% .125 W F TC=0+-100 | 24546 | C4-1/8-TO-1002-F |
| A33R11 | 0757-0465 | 6 | | RESISTOR 100K 1% .125 W F TC=0+-100 | 24546 | C4-1/8-TO-1003-F |
| A33R12 | 0757-0442 | 9 | | RESISTOR 10K 1% .125 W F TC=0+-100 | 24546 | C4-1/8-TO-1002-F |
| A33R13 | 0757-0415 | 6 | | RESISTOR 475 1% .125 W F TC=0+-100 | 24546 | C4-1/8-TO-475R-F |
| A33R14 | 1757-0415 | 6 | | RESISTOR 475 1% .125 W F TC=0+-100 | 24546 | C4-1/8-TO-475R-F |
| A33R15 | 0757-0415 | 6 | | RESISTOR 475 1% .125 W F TC=0+-100 | 24546 | C4-1/8-TO-475R-F |
| A33R16 | 0757-0415 | 6 | | RESISTOR 475 1% .125 W F TC=0+-100 | 24546 | C4-1/8-TO-475R-F |
| A33R17 | 0757-0415 | 6 | | RESISTOR 475 1% .125 W F TC=0+-100 | 24546 | C4-1/8-TO-475R-F |
| A33R18 | 0757-0415 | 6 | | RESISTOR 475 1% .125 W F TC=0+-100 | 24546 | C4-1/8-TO-475R-F |
| A33R19 | 0757-0415 | 6 | | RESISTOR 475 1% .125 W F TC=0+-100 | 24546 | C4-1/8-TO-475R-F |
| A33R20 | 0757-0415 | 6 | | RESISTOR 475 1% .125 W F TC=0+-100 | 24546 | C4-1/8-TO-475R-F |
| A33R21 | 0757-0442 | 9 | | RESISTOR 10K 1% .125 W F TC=0+-100 | 24546 | C4-1/8-TO-1002-F |
| A33R22 | 0757-0442 | 9 | | RESISTOR 10K 1% .125 W F TC=0+-100 | 24546 | C4-1/8-TO-1002-F |
| A33R24 | 2100-3889 | 5 | 1 | RESISTOR-VAR DUAL 10K-5%-WW/CP | 28480 | 2100-3889 |
| A33U1 | 1820-1963 | 7 | 2 | IC FF CMOS D-TYPE POS-EDGE-TRIG DUAL | 01928 | CB4013BAE |
| A33U2 | 1820-2310 | 0 | 1 | IC CNTR PMOS DECD UP/DOWN SYNCHRO | 50088 | MK50399N |
| A33U3 | 1820-1413 | 2 | 1 | IC DCDR CMOS BCD-TO-7-SEG 4-TO-7-LINE | 04713 | MC14511BCP |
| A33U4 | 1858-0047 | 5 | 1 | TRANSISTOR ARRAY 16-PIN PLSTC DIP | 13606 | ULN-2003A |
| A33U5 | 1820-0938 | 4 | 1 | IC FF CMOS J-K M/S POS-EDGE-TRIG DUAL | 01928 | CD4027AE |
| A33U6 | 1820-0935 | 1 | 1 | IC CNTR CMOS BIN NET-EDGE-TRIG 14-BIT | 01928 | CD4020AE |
| A33U7 | 1820-1963 | 7 | | IC FF CMOS D-TYPE POS-EDGE-TRIG DUAL | 01928 | CD4013BAE |
| A33U8 | 1826-0026 | 3 | 1 | IC COMPARATOR PRCN TO-99 | 01295 | LM311L |
| A33U9 | 1820-1408 | 5 | 1 | IC GATE CMOS AND TPL 3-INP | 01928 | CD4073BF |
| A33W1 | 03580-61611 | 0 | 1 | CABLE ASSEMBLY | 28480 | 03580-61611 |
| A40 | 03580-66540 | | 1 | DISPLAY ADJUSTMENT ASSY | | |
| A40R1 | 2100-3212 | | 2 | RESISTOR-VAR 200 10% | 32977 | 3386P-Y46-201 |
| A40R2 | 2100-3212 | | | RESISTOR-VAR 200 10% | 32977 | 3386P-Y46-201 |
| A40R3 | 2100-3210 | | 1 | RESISTOR-VAR 10K 10% | 32977 | 3386P-Y46-103 |
| A40W1 | 03582-61640 | | 1 | CABLE ASSY A13/A40 | 28480 | 03580-61640 |

Δ1 SEE BACKDATING.

See introduction to this section for ordering information
*Indicates factory selected value

Replaceable Parts

## Table 6-3. Replaceable Parts (Cont'd).

| Reference Designation | HP Part Number | C D | Qty | Description | Mfr Code | Mfr Part Number |
|---|---|---|---|---|---|---|
| | | | | CHASSIS MOUNTED COMPONENTS | | |
| | 03580-69508 | | | BATTERY PACK KIT | 28480 | 03580-69508 |
| BT1 THRU BT4 | 1420-0203 | | 4 | BATTERY PACK (4 CELLS) (OPT 001 ONLY) | 05397 | Y-6114 |
| BT5 | 1420-0202 | | 1 | BATTERY PACK (4 CELLS CENTER TAP) (OPT 001 ONLY) | 05397 | Y-5505 |
| | 03580-04108 | | 2 | PLASTIC BATTERY END GUARD | 28480 | 03580-04108 |
| | 10101B | | 1 | COVER:PROTECTIVE FRONT (OPT 001 ONLY) | 28480 | 10101B |
| | 0624-0410 | | 4 | SCR: TPG 6-19 (OPT 001 ONLY) | 28480 | 0624-0410 |
| C1 | 0160-2050 | | 1 | C: FXD 10 UF 30 V 10% | 56289 | 127P1069R3S4 |
| DS1 | 2140-0380 | | 1 | LAMP: INCAND (POWER) | 17537 | 86 |
| | 1450-0153 | | 1 | LAMP HOLDER (FOR DS1) | 08717 | 102SR |
| | 1450-0157 | | 1 | LENS (FOR DS1) | 08717 | 102XX-W |
| DS2 THRU DS4 | 1990-0450 | | 3 | DIODE: LIGHT EMITTING | 28480 | 1990-0450 |
| | 5040-7626 | | 3 | CLAMP LED (FOR DS2-4) | 28480 | 5040-7626 |
| | 1450-0404 | | | LENS-PILOT LIGHT | | |
| F1 | 2110-0012 | | 1 | FUSE: 0.5 A 250 V NB | 75915 | 312.500 |
| J1 | 1510-0084 | | 1 | BINDING POST: J-GRAY/RED | 28480 | 1510-0084 |
| J2 | 1510-0087 | | 1 | BINDING POST: J-GRAY/BLK | 28480 | 1510-0087 |
| J3, J4 | 1510-0076 | | 2 | BINDING POST: J-GRAY | 28480 | 1510-0076 |
| J5 THRU J10 | 1250-0083 | | 6 | CONN: BNC | 02660 | 31-221-1020 |
| J11, J12 | 1510-0076 | | 2 | BINDING POST: J-GRAY (OPT 002 ONLY) | 28480 | 1510-0076 |
| | 0340-0732 | | | INSULATOR: BINDING POST | 28480 | 0340-0732 |
| | 2190-0027 | | | WASHER-INTERNAL LOCK | 78189 | 1914-00 |
| | 2950-0006 | | | NUT-HEX | 73734 | 9000 |
| K1 | 0490-0499 | | 1 | RELAY:SPDT 2A 12 VDC PEN LIST | 12300 | RS5D-12VDC |
| L1 | 01200-6801 | | 1 | COIL: TRACE ALIGN | 28480 | 01200-44703 |
| R1 | 2100-0573 | | 1 | R: VAR LINEAR 200K OHM (INTENSITY) 20% 1/2W | 01121 | WA4N040S204MZ |
| R2 | 2100-0572 | | 1 | R: VAR C COMP 100K OHM (ADAPTIVE SWEEP-INCLUDES S1) | 12697 | 381 |
| R3 | 2100-0571 | | 1 | R: VAR 5M OHM (FOCUS) 20% | 12697 | 381 |
| R4 | 2100-1714 | | 1 | R: VAR C COMP LINEAR 1K OHM 20% 1/2W (CAL 10 KHZ) | 01121 | TYPE W |
| R5 | 2100-2843 | | 1 | R: VAR COMP LINEAR 5K OHM 10% 1/2W (LEVEL) | 28480 | 2100-2843 |
| R6 | 2100-0564 | | 1 | R: VAR, 100 K 20 | 28480 | 2100-0564 |
| R7 | 2100-0574 | | 1 | R: VAR 10 TURN 5 K - 10% | 28480 | 2100-0574 |
| R24A/B | 2100-3889 | | | R: VAR 10K/10K | 28480 | 2100-3889 |
| S1 | 2100-0572 | | | SWITCH: SPST (P/O R2) | 12697 | 381 |
| S2 | 03580-01901 | | 1 | SWTICH: PUSHBUTTON (DISPLAY) | 28480 | 03580-01901 |
| S3 | 3101-0548 | | 1 | SWITCH: PUSHBUTTON (AMPLITUDE MODE) | 28480 | 3101-0548 |
| S4 | 3101-0199 | | 1 | SWITCH: SLIDE DPDT (DBV/DBM) 0.5A 125V | 79727 | G126-0012 |
| S5 | 3101-0199 | | 1 | SWTICH: SLIDE DPDT (EXT REF/NORMAL) | 79727 | G126-0012 |
| S6 | 3101-0575 | | 1 | SWITCH: SLIDE (BAL,BRIDGED,TERMINATED)(OPT 002 ONLY) | 79727 | G168S-0000 |
| S7 | 3101-0199 | | 1 | SWTICH: SLIDE | 28480 | 3101-0199 |
| T1 | 9100-3425 | | 1 | TRANSFORMER: POWER | 28480 | 9100-3425 |
| T2 | 9100-3883 | | 1 | TRANSFORMER: OUTPUT (BALANCED TRACKING OSC OUT) (OPT 002 ONLY) | 28480 | 9100-3883 |
| V1 | 5083-1871 | | 1 | TUBE: CATHODE RAY | 28480 | 5083-1871 |
| W1 | 8120-1348 | | 1 | CORD: POWER, DETACHABLE | 70903 | KHS-7041 |
| W2 | 03580-61606 | | 1 | CABLE ASSY: POWER | 28480 | 03580-61606 |
| W3 | 03580-61604 | | 1 | CABLE ASSY: DIGITAL STORAGE | 28480 | 03580-61604 |
| W4 | 03580-61603 | | 1 | CABLE ASSY: POT (INCLUDES FOCUS POT, R3) | 28480 | 03580-61603 |
| W5 | 03580-61602 | | 1 | CABLE ASSY: DBV/DBM SWITCH | 28480 | |
| | 03580-61608 | | 1 | CABLE ASSY: CRT | 28480 | 03580-61608 |
| W6 | 03580-61602 | | 1 | CABLE ASSY: INPUT (OPT 002 ONLY) | 28480 | 03580-61602 |
| XA1 | 1200-0037 | | 1 | SOCKET: CRT | 72825 | 97097 |
| | | | | MISCELLANEOUS MECHANICAL PARTS | | |
| | 5020-0476 | | 1 | BEZEL: CRT (METAL) | 28480 | 5020-0476 |
| | 03580-04102 | | 1 | COVER: BOTTOM | 28480 | 03580-04102 |
| | 03580-00608 | | 1 | COVER: CARD NEST | 28480 | 03580-00608 |
| | 03580-04104 | | 2 | COVER: SIDE RAIL | 28480 | 03580-04104 |
| | 03580-04103 | | 1 | COVER: TOP | 28480 | 03580-04103 |
| | 01200-44701 | | 1 | CRT NECK-CLAMP | 28480 | 01200-44701 |
| | 1390-0084 | | | FASTENER-PANEL: RECEPTACLE, QUARTER TURN | 94222 | 82-47-101-15 |
| | 1390-0339 | | | FASTENER-PANEL: SCREW, QUARTER TURN | 28480 | 1390-0339 |
| | 1390-0088 | | | FASTENER-PANEL: RETAINER (FOR SCREW) | 28480 | 1390-0088 |
| | 03580-60121 | | 1 | DECK: MAIN | 28480 | 03580-60121 |
| | 5060-0548 | | 1 | FACE PLACE: CRT (BLUE) | 28480 | 5060-0548 |
| | | | | FOOT: REAR PANEL | | |
| | 5040-5862 | | 4 | BASE: FOOT | 28480 | 5040-5862 |
| | 5040-5861 | | 4 | CAP: END | 28480 | 5040-5861 |
| | 03580-20013 | | 1 | FRAME: FRONT | 28480 | 03580-20001 |
| | 03580-20014 | | 1 | FRAME: REAR | 28480 | 03580-20012 |
| | 1510-0038 | | 1 | BINDING POST-SINGLE | 28480 | 1510-0038 |
| | 7120-4609 | | 1 | WARNING LABEL | 28480 | 7120-4609 |
| | 03580-23706 | | 2 | FRAME SIDE RAIL | 28480 | 03580-23702 |
| | 1440-0103 | | 2 | HANDLE: STRAP | 28480 | 1440-0103 |
| | 5040-0508 | | 1 | LIGHT SHIELD: CRT (PLASTIC) | 28480 | 5040-0508 |

See introduction to this section for ordering information
*Indicates factory selected value

Replaceable Parts

## Table 6-3. Replaceable Parts (Cont'd).

| Reference Designation | HP Part Number | C D | Qty | Description | Mfr Code | Mfr Part Number |
|---|---|---|---|---|---|---|
| | | | | MISCELLANEOUS MECHANICAL PARTS (CONT'D) | | |
| | 03580-04104 | | 2 | COVER: SIDE RAIL | 28480 | 03580-04104 |
| | 5040-7042 | | 4 | CAP: END (FOR HANDLE) | 28480 | 5040-7042 |
| | 03580-24706 | | 4 | RETAINER (FOR HANDLE) | 28480 | 03580-24706 |
| | 03580-26001 | | 4 | SCREW (FOR HANDLE) | 28480 | 03580-26001 |
| | 3050-0456 | | 4 | WASHER (FOR HANDLE) | 86928 | 5808-16-15 |
| | 5040-0508 | | 1 | LIGHT SHIELD: CRT (PLASTIC) | 28480 | 5040-0508 |
| | 03580-00209 | | 1 | PANEL: FREQUENCY CONTROL MODULE | 28480 | 03580-00203 |
| | | | | PANEL: FRONT (INSTRUMENT) | | |
| | 03580-00211 Δ | | 1 | STANDARD 3580A | 28480 | 03580-00201 |
| | 03580-00214 Δ | | 1 | OPTION 002 | 28480 | 03580-00204 |
| | | | | PANEL: REAR | | |
| | 03580-00212 | | 1 | STANDARD 3580A | 28480 | 03580-00212 |
| | 03580-00205 | | 1 | OPTION 002 | 28480 | 03580-00205 |
| | 1460-1341 | | 1 | STAND: TILT | 28480 | 1460-1341 |
| | 03580-09301 | | 1 | BEZEL: LED | 28480 | 03580-09301 |
| | | | | KNOBS | | |
| | 0370-10005 | | | ADAPTIVE SWEEP | 28480 | 0370-1005 |
| | 0370-2182 | | | AMPLITUDE REF LEVEL | 28480 | 0370-2181 |
| | 0370-2186 | | | BANDWIDTH | 28480 | 0370-2186 |
| | 0370-2188 | | | DISPLAY SMOOTHING | 28480 | 0370-2188 |
| | 0370-1005 | | | FOCUS | 28480 | 0370-1005 |
| | 0370-3034 | | 1 | COARSE FREQUENCY | 28480 | 0370-3034 |
| | 0370-2185 | | | FREQUENCY SPAN | 28480 | 0370-2185 |
| | 03580-67401 | | | INPUT SENSITIVITY | 28480 | 03580-67401 |
| | 7120-4008 | | | DECAL | 28480 | 7120-3115 |
| | 0370-1005 | | | INTENSITY | 28480 | 0370-1005 |
| | 0370-3006 | | | MANUAL FINE FREQ | 28480 | 0370-3006 |
| | 0370-2994 | | | POWER | 28480 | 0370-2473 |
| | 0370-2187 | | | SWEEP MODE | 28480 | 0370-2187 |
| | 0370-2184 | | | SWEEP TIME | 28480 | 0370-2184 |
| | 0370-3036 | | 1 | CONCENTRIC KNOB (SMOOTHING) | 28480 | 0370-3036 |
| | 0370-2189 | | | VERNIER | 28480 | 0370-2189 |
| | 0370-3008 | | | FINE FREQUENCY | | |
| | 0370-0906 | | 6 | PUSHBUTTON-BASE | 28480 | 0370-0906 |
| | 0370-0934 | | 6 | PUSHBUTTON-CAP | 28480 | 0370-0934 |
| | 0370-0914 | | 6 | PUSHBUTTON-BEZEL | 28480 | 0370-0914 |
| | 3030-0007 | | | SET SCREW | | |
| | 0350-0137 | | 1 | LABEL: PUSHBUTTON, 1 DB | 28480 | 0350-0137 |
| | 0350-0136 | | 1 | LABEL: PUSHBUTTON, 10 DB | 28480 | 0350-0136 |
| | 0350-0135 | | 1 | LABLE: PUSHBUTTON, LIN | 28480 | 0350-0135 |
| | 0350-0138 | | 3 | LABEL: PUSHBUTTON, PLAIN | 28480 | 0350-0138 |
| | 03580-24305 | | 1 | PLATE-FRONT (SUB-PANEL) | 28480 | 03580-24305 |
| | 3101-0199 | | 1 | SWITCH-SLIDE | 79727 | G126-0012 |
| | 1450-0404 | | 1 | LENS CAP | 28480 | 1450-0404 |
| | 03580-00611 | | 1 | FCM SHIELD | 28480 | 03580-00611 |
| | 1990-0450 | | 1 | DIODE-LED | 28480 | 1990-0450 |
| R6 | 2100-0564 | | 1 | R: VAR, 100 K 20° | 28480 | 2100-0564 |
| R7 | 2100-3809 | | 1 | R: VAR 5 K | 28480 | 2100-3809 |
| S7 | 3101-0199 | | 1 | SWITCH SLIDE | 28480 | 3101-0199 |
| DS1 | 1990-0819 | | | LED BANK | | |
| | 03580-60209 | | | PANEL: FCM w/BEZEL | | |
| | 03580-88701 | | | RETROFIT KIT FOR FCM (MECH. TO ELECT.) | | |
| | | | | RACK MOUNT KIT (OPTION 003) | | |
| | 03580-00216 | | 1 | FRONT PANEL (OPT 003) | | |
| | 03580-01218 | | 2 | SIDE BRACKET (OPT 003) | | |
| | 03580-23707 | | 2 | SIDE RAIL (OPT 003) | | |
| | 1440-0169 | | 2 | OVAL HANDLE (OPT 003) | | |

ΔFOR S/N 1312A-00365 AND BELOW: ORDER 03580-00201 (STD) OR 03580-00204 (OPT. 002).

See introduction to this section for ordering information

*Indicates factory selected value

5A

Figure 1-40a. Frequency Counter and Display Circuits (A33)

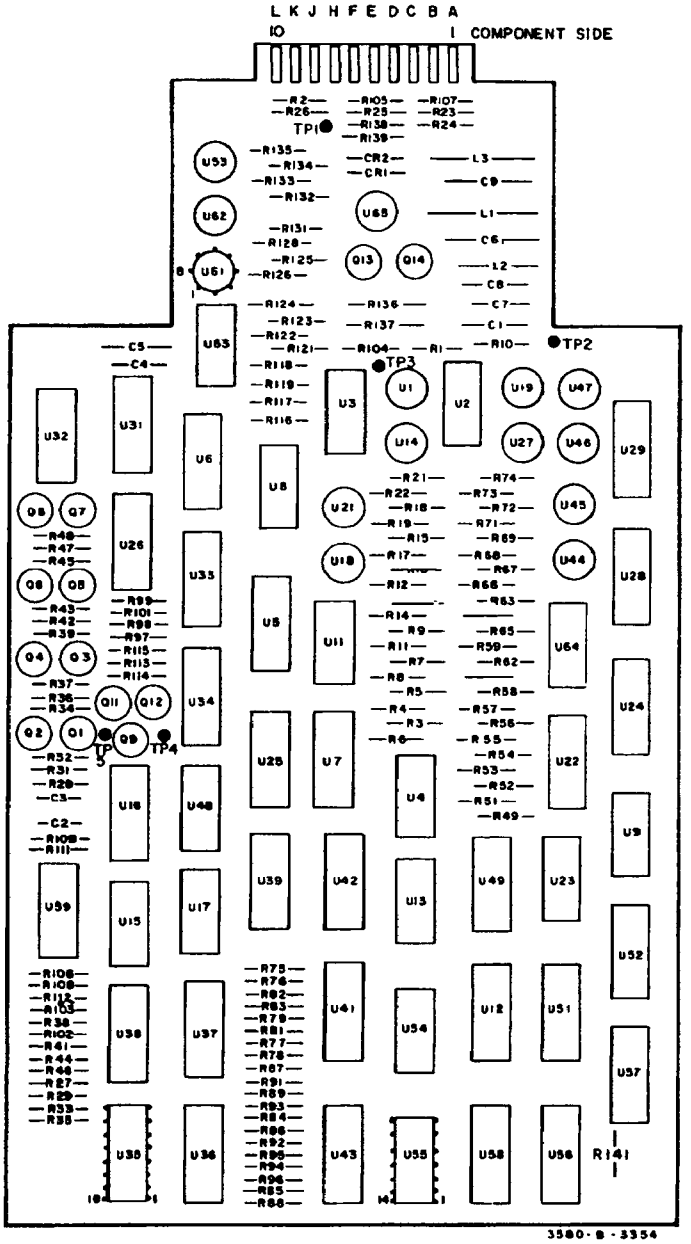


A7

*hp* Part No. 03580-66507

Rev. C

NOTE 1: For serial number 2030A04745 and lower see Δ 17.

NOTE 2: For serial number 2030A4460 and lower see Δ 18.

## GENERAL WAVEFORM INFORMATION

[illegible]

| | |
|---|---|
| ADAPTIVE SWEEP | OFF |
| DISPLAY | [illegible] |
| AMPLITUDE MODE | LOG 10 dBm/DIV |
| AMPLITUDE REF LEVEL | NORMAL |
| dBm/LIN - dBm 600 Ω | dBm/LIN |
| INPUT SENSITIVITY | CAL |
| VERNIER (Amplitude) | CAL (Fully CW) |
| FREQUENCY | 10 kHz |
| START - CTR | CTR |
| RESOLUTION BANDWIDTH | 300 Hz |
| DISPLAY SMOOTHING | [illegible] |
| FREQ. SPAN/DIV | 2.5 kHz |
| SWEEP TIME/DIV | 1 SEC |
| SWEEP MODE | REF |

[illegible]

The front panel ZERO CAL and CAL 10 kHz were adjusted to give a full scale display of the 10 kHz CAL signal to the center of the screen. It is advised to set this adjustment to the MANUAL mode, and then switch to the [illegible] mode to measure the [illegible].

OSCILLOSCOPE

10:1 Probe, Dual Trace (Chopped), triggered by Channel 2. The various amplitude [illegible] in the [illegible] amplifier [illegible] and does not include the X10 [illegible] introduced by the probe.

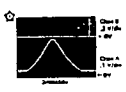


Intermediate

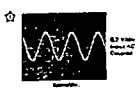


Intermediate

NOTE 1: The voltage range given is for a zero to full scale [illegible] frequency [illegible] of the CRT display.

NOTE 2: The voltage range given is for a zero to full scale [illegible] of the CRT display, LINEAR MODE. In LOG 10 [illegible] Amplitude Mode, [illegible] [illegible] [illegible] [illegible]

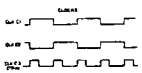


Clock 3 and Inspector [illegible]

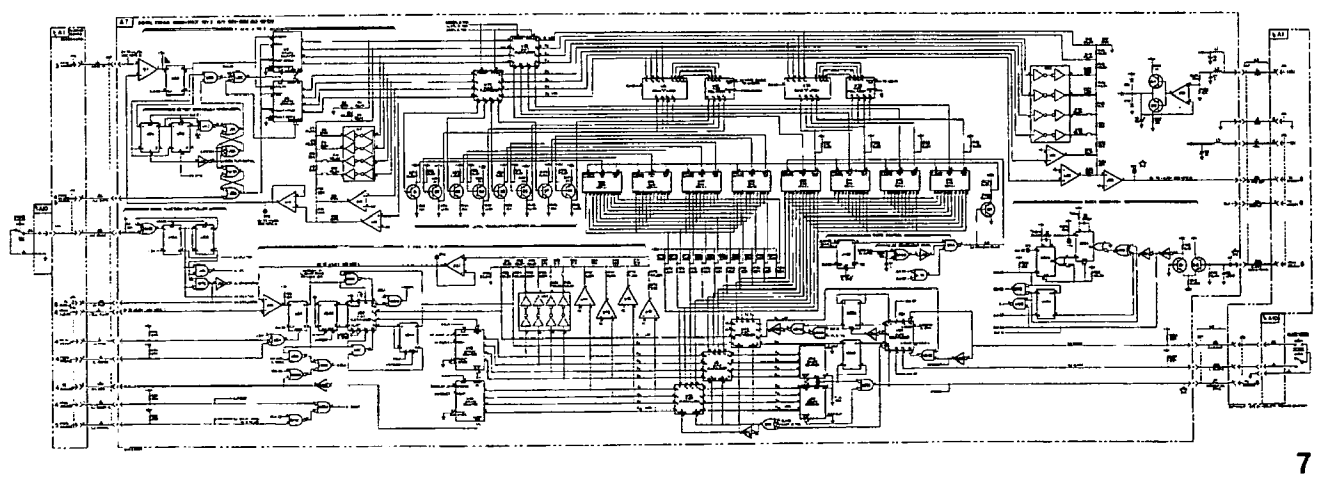

7

Figure 7-10. Digital Storage Assembly (A7) Schematic and [illegible]

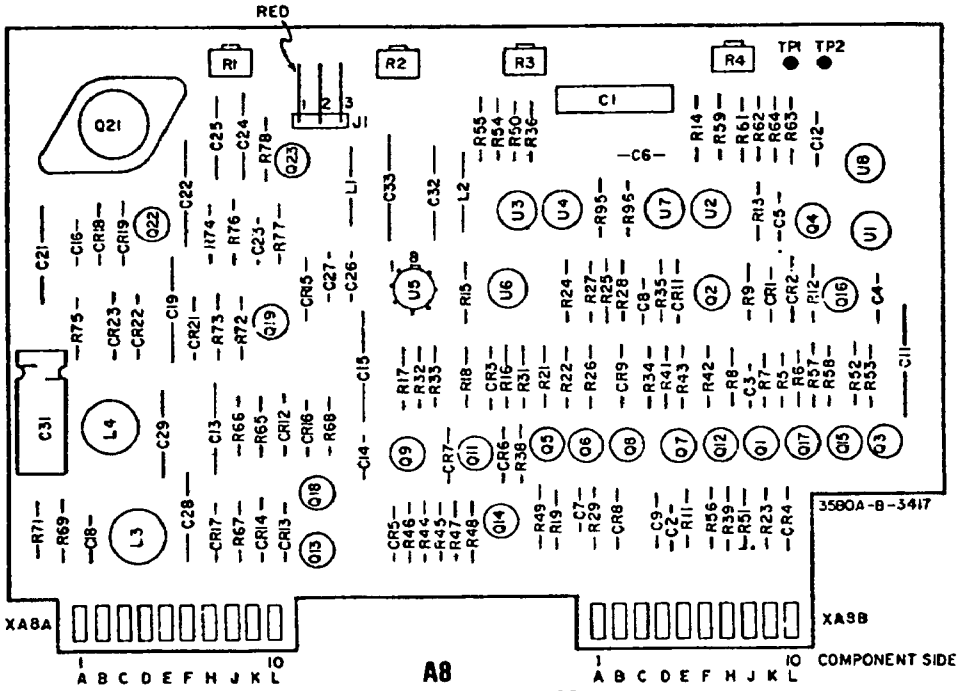


**A8**
**hp Part No. 03580-66508**
**Rev B**

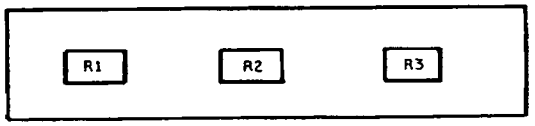


**A40**
**hp Part No. 03580-66540**
**Rev A**

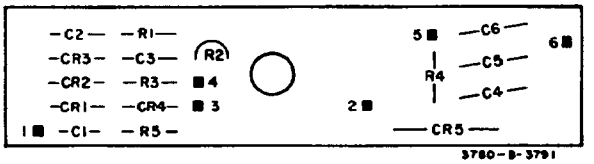


**A11A1**
**-hp- Part No. 03580-66531**
**Rev. A**

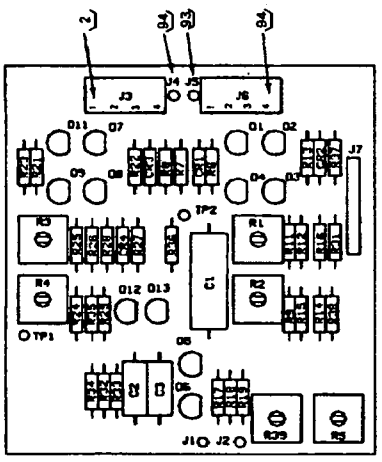


**A13**
**hp Part No. 03580-66513**
**Rev B**

NOTE: For serial numbers 2030A06029 and below. R37, R38, and R39 are used when the A13 Rev B board is used without an A40 board.

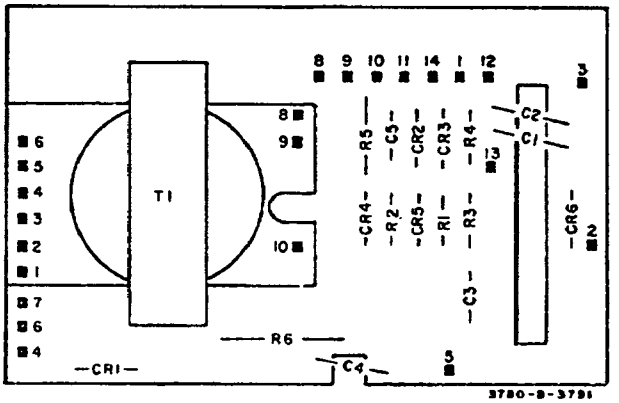


**A11A2**
**-hp- Part No. 03580-66532**
**Rev. A**

8

6

## UPDATE OF FCM

The 3580A has had two different types of frequency control modules or FCM. Original 3580A's had a mechanical FCM with gear driven parts while the new FCM is a digital design using a potentiometer.

Both the A2 and A16 boards have undergone revisions to account for the change from the mechanical to digital FCM. The major physical effect of the change in FCM has been the need for additional signal lines from the A2 to the A16 board. The older mechanical FCM required that two signals be brought by wires from the A2 board to the A16 board. This was accomplished by routing two wires from crimp posts on the A2 to similar posts on the A16.

When the instrument was revised for the new digital FCM, the lines required from the A2 to A16 board increased from two to four. On early versions of the digital FCM the four wires were routed to A16 from pins in different locations on the A2 board. In addition to units manufactured in this manner some old 3580A's have been retrofitted per Service Note 3580A-9.

The current A2 board (-hp-Part No. 03581-66512) has a five pin connector J1 which contains the wires which are routed to a mating connector on the cable to the A16 board.

Since there are several combinations of A2 and A16 boards which may exist the following outlines the procedure for ordering and installing either of the boards.

PROCEDURE:

The replacement of either the A2 or A16 board in the 3580A is affected by the current A2 board in the instrument. Identifying the A2 board currently in the instrument leads to the proper ordering and installation procedure.

Remove the A2 board from the instrument. Pay specific attention to the type and number of wired connections from the A2 to the A16 board.

If the A2 board in the instrument has two wires connecting it to the A16 board then go to Procedure A.

If the A2 board in the instrument has four wires connecting it to the A16 board and the board part number is 03581-66502, then then go to Procedure B.

If the A2 board has part number 03581-66512, then go to Procedure C.

PROCEDURE A:

In this case the instrument still has the mechanical FCM and has not been retrofitted. Follow the instructions given below depending upon the board needed:

Replacing the A16 Board:

The A16 board for the old FCM is a direct replacement part but it has the old part number. Order -hp- Part No. 0358066516 and install directly in place of the A16 board currently in the instrument.

Replacing the A2 Board:

The new A1 board is compatable with the old FCM but is not a direct replacement. Since the new A1 board has the five pin connector, a cable must be ordered for connecting the A1 to the A16 board.

Order -hp- Part No. 03580-66512, A2 Board
03581-61613, Cable Assembly

1. Remove both the A2 and A16 board from the instrument.
2. Desolder the red and grey wires from the A2 to A16 board and note their location.
3. Solder the red and grey wires to the corresponding lugs on the A16 board and reinstall it.
4. Remove crystal A2Y1 and resistor A2R65 from the old A2 board and reinstall in the new A2 board. These are a matched pair which must be reinstalled in the new A2.
5. Attach the connector from A16 to A2 and reinstall A2 in the instrument. Verify calibration of the instrument.

PROCEDURE B:

This procedure is used for 3580A's which have the new digital FCM either installed at the factory or as a field retrofit. The A2 board has lug jumper connectors. Follow the instructions below for the board being replaced.

Replacing The A16 Board:

When replacing the A16 board, the new A16 will have a connector soldered in place of the four loose wires on the old A16. The procedure to replace the A16 includes removal of this connector from the new A16.

Order -hp- Part No. 03580-66536, A16

1. Remove the old A16 board from the 3580A being careful to note the position of the wires on the old board.
2. Unsolder the five pin connector cables from the new A16 board. This will not be needed for installation.
3. Resolder the wires into position on the new A16 as shown in figure xx.

4. Re-install the new A16 board and calibrate the 3580A.

Replacing The A2 Board:

When replacing the A2 board there is a requirement for the cable assembly which connects the A2 board to the A16 board. The installation will include removal of the A16 board for installation of the cable assembly.

Order -hp- Part No. 03580-66512, A2
Order -hp- Part No. 03580-61615, Cable

1. Remove the A16 board from the instrument noting the location of all wires.

2. Solder the cable supplied to the A16 as shown in figure xx and reconnect the other wires to the A16.

3. Install the A16 board back in the instrument.

4. Remove crystal A2Y1 and resistor A2R65 from the old A2 board. These are a matched pair and must be reinstalled in the new A2 board.

5. Insert the new A2 board in the 3580A and connect the cable from A16 to the connector in the upper right hand corner of A2.

6. Re-assemble and calibrate the 3580A.

PROCEDURE C:

The A2 board in this case has the five pin connector J1 in the upper right hand corner for the new digital FCM. The procedure for replacing either the A16 or the A2 is as follows:

If the A16 board needs to be replaced then order Part No. 03580-66536.

If the A2 board needs to be replaced then order Part No. 03580-66512

Zero Beat Response is suppressed. Proceed to the Mixer Balance Adjustments (Paragraph 5-81) of the Adjustment Procedures if the Zero Beat Response is too large. Proceed to Section VII for troubleshooting information if there is too much IF Feedthru.

Equipment Required:

Frequency Synthesizer (-hp- Model 3320B, 50 ohm)

a. Reconnect the synthesizer to the 3580A. Do not terminate. Adjust the source for a 10 volt 100 kHz output (+ 26.99 dBm 50 ohms setting on 3320B and unterminated).

b. Position the following front panel controls: (Only those controls printed in **BOLD** require a change from the previous test).

ADAPTIVE SWEEP .....OFF
DISPLAY ..... All pushbuttons released
AMPLITUDE MODE .....LOG 10 dBv/DIV
AMPLITUDE REF LEVEL .....NORMAL
dBv/LIN - dBm 600 Ω .....dBv/LIN
**INPUT SENSITIVITY** ..... **+ 20 dB**
VERNIER (Amplitude) ..... CAL (Fully CW)
FREQUENCY ..... 00.0 kHz
START - CTR .....START
RESOLUTION BANDWIDTH ..... 3 Hz
DISPLAY SMOOTHING .....MIN
FREQ. SPAN/DIV ..... 20 Hz
SWEEP TIME/DIV ..... 5 SEC
SWEEP MODE .....MANUAL

Option 002: Set dBm 900 Ω/LIN - dBm 600 Ω switch to dBm 900 Ω; set INPUT MODE switch to UNBAL.

c. Adjust MANUAL VERNIER for a response in the center of the screen. The display indication should be at least 70 dB below full scale to verify the IF Feedthru specification of Table 1-1. If the instrument fails this test, see Section VII for troubleshooting information.

d. Disconnect the synthesizer. Reposition the following front panel controls:

RESOLUTION BANDWIDTH ..... 300 Hz
FREQ. SPAN/DIV ..... 5 KHz
SWEEP MODE .....RESET

e. Momentarily press the following front panel control:

DISPLAY .....CLEAR WRITE

f. Adjust ZERO CAL for a maximum display indication on the left graticule. This display should be at least 30 dB (3 major divisions) below full scale to verify the Zero Beat Response specification of Table 1-1. If the instrument fails this test, go to the Mixer Balance Adjustments (Paragraph 5-81) of the Adjustment Procedures.

## 5-38. Input Impedance Tests.

5-39. These tests verify the Input Impedance characteristics of Table 1-2. Since there is no adjustment for this parameter, see Section VII for troubleshooting information if the instrument fails this test.

Equipment required:

1 MΩ ± 1% film resistor (-hp- Part No. 0757-0344)

a. Position the following front panel controls. (Only those controls printed in **BOLD** require a change from the previous tests.)

ADAPTIVE SWEEP .....OFF
DISPLAY ..... All pushbuttons released
AMPLITUDE MODE .....LOG 10 dBv/DIV
AMPLITUDE REF LEVEL .....NORMAL
dBv/LIN - dBm 600 Ω .....dBv/LIN
**INPUT SENSITIVITY** ..... **0 dB**
VERNIER (Amplitude ..... CAL (Fully CW)
FREQUENCY ..... 00.0 kHz
START - CTR .....START
DISPLAY SMOOTHING .....MIN
**RESOLUTION BANDWIDTH** ..... **10 Hz**
**FREQ. SPAN/DIV** ..... **1 KHz**
SWEEP TIME/DIV ..... 5 SEC
SWEEP MODE .....RESET

Option 002: Set dBm 900 Ω/LIN - dBm 600 Ω switch to dBm 900 Ω; set INPUT MODE switch to UNBAL.

b. Adjust ZERO CAL for a peak display on the left graticule.

c. Reposition the following front panel controls:

AMPLITUDE MODE .....LOG 1 dB/DIV
SWEEP MODE .....MANUAL

d. Connect the rear panel TRACKING OSC OUT to the front INPUT terminals of the 3580A. Adjust the rear panel TRACKING OSC LEVEL control fully CW. Adjust MANUAL VERNIER for a 1 kHz display indication (1 major division from left graticule). Readjust the TRACKING OSC LEVEL control for a full scale 0 dB display. Momentarily press the following control:

DISPLAY .....CLEAR WRITE

e. Connect the 1 MΩ resistor in series between the TRACKING OSC OUT and front panel INPUT terminals. The display indication should drop 6 dB ± .3 dB (6 major divisions ± .3 major divisions) to verify an input impedance of 1 MΩ.

f. Reposition the following front panel control:

INPUT SENSITIVITY ..... -10 dB

g. Readjust the rear panel TRACKING OSC LEVEL control for a full scale display. Adjust MANUAL VERNIER for a display indication at 10 kHz (far right display graticule). DO NOT REMOVE 1 MΩ RESISTOR. Momentarily press the following front panel control:

DISPLAY ..... CLEAR WRITE

h. 1) Std. 3580A: The amplitude should drop 3 dB ± 1 dB, verifying that the input shunt capacitance is 30 pF, nominal.

2) Option 002: The amplitude should drop 4 dB ± 1 dB, verifying that the input shunt capacitance is 40 pF, nominal.

i. Disconnect the cable connected between the TRACKING OSC OUT and the front panel INPUT terminals.

## 5-40. Output Tests.

5-41. These tests verify the Output specifications of the 3580A listed in Table 1-1.

Equipment Required:

Electronic Counter (-hp- Model 5326A)
Digital Multimeter (-hp- Model 34740/34702)
Distortion Analyzer (-hp- Model 333A)

### 5-42. TRACKING OSC OUTPUT Tests.

a. Position the following front panel controls. (Only those controls printed in **BOLD** require a change from the previous tests).

ADAPTIVE SWEEP ..... OFF
DISPLAY ..... All pushbuttons released
**AMPLITUDE MODE ..... LOG 10 dBv/DIV**
AMPLITUDE REF LEVEL ..... NORMAL
dBv/LIN - dBm 600 Ω ..... dBv/LIN
**INPUT SENSITIVITY ..... + 20 dB**
VERNIER (Amplitude) ..... CAL (Fully CW)
FREQUENCY ..... 00.0 kHz
START - CTR ..... START
RESOLUTION BANDWIDTH ..... 10 Hz
DISPLAY SMOOTHING ..... MIN
**FREQ. SPAN/DIV ..... 5 KHz**
SWEEP TIME/DIV ..... 5 SEC
**SWEEP MODE ..... RESET**

Option 002: Set dBm 900 Ω/LIN - dBm 600 Ω switch to dBm 900 Ω; set INPUT MODE switch to UNBAL.

b. Momentarily press DISPLAY - CLEAR WRITE. Adjust the ZERO CAL for a peak display (on leftmost display graticule).

c. Connect the multimeter (AC mode 100 volt range) and a 600 Ω resistor termination to the rear panel TRACKING OSC OUT. Adjust the FREQUENCY dial for 50Hz (300 Hz for Option 002). Adjust the rear panel TRACKING OSC LEVEL control forj a 1.00 volt reading on the multimeter.*

d. Adjust the FREQUENCY control to 50.0 kHz (20.0 kHz for Option 002 instruments). Verify that the multimeter reads 1.00 volts ± .06 volts.

e. Reposition the following front panel controls:

AMPLITUDE MODE ..... LIN
INPUT SENSITIVITY ..... 2 V
FREQUENCY ..... 00.0 Hz
RESOLUTION BANDWIDTH ..... 30 Hz
SWEEP MODE ..... MANUAL

f. Connect the rear panel TRACKING OSC OUT to the front panel INPUT terminals. Momentarily press the following control:

DISPLAY ..... CLEAR WRITE

g. By alternately pressing and releasing DISPLAY - CLEAR WRITE while adjusting MANUAL VERNIER, center the display indication (a narrow spike).

h. Adjust the rear panel TRACKING OSC LEVEL control for a full scale 2 V display. Reposition the following front panel control:

RESOLUTION BANDWIDTH ..... 3 Hz

i. The display indication should drop no lower than 1 V (5 major divisions) to verify the frequency accuracy of the tracking oscillator. If the tracking oscillator frequency is out of tolerance, remove the top cover and adjust A2C4 for a peak display indication.

j. Reposition the following front panel control:

FREQ. SPAN/DIV ..... 0.1 KHz

k. Adjust MANUAL VERNIER for a 1 KHz display indication (indication on far right display graticule). Momentarily press the following front panel control:

DISPLAY ..... CLEAR WRITE

l. Connect the TRACKING OSC OUT to the INPUT of

*For measurements below 50 Hz, use a low frequency Digital Voltmeter such as the -hp- Model 3480/3484 with true rms.

CHANGE NO. Δ 17:

Applies to instruments having a serial number 2030A04745 or lower.

Page 6-18/6-19, Table 6-3

Change the following parts:

A7R13, A7R16, A7R61, A7R64, A7R127, and A7R129 to P/N 0698-3445, Resistor 348 Ω 1%

Change the following parts:

A7R14, A7R17, A7R62, A7R65, A7R73, and A7R128 to P/N 0811-1794, Resistor 99.25k .1%

Change A7R74 to P/N 0698-4456, Resistor 549 Ω 1%

CHANGE NO. Δ 18:
Applies to instruments having a serial number 2030A04461 and greater.

Page 8-7, Figure 8-6

Change: A8C2 to 470 pF A8C23 to .047 pF Add: A8C34 (.1 μF) in parallel with A8C32.

CHANGE NO. Δ 19:
Applies to instruments having a serial number 2030A05375 and lower.

To increase the performance of the Rev. B combinning board A16 (03580-66536), A16C31 and A16C32 should be removed and A16C45 (P/N 0160-4571) should be added.

CHANGE NO. Δ 20:
Applies to instruments having serial number 2030A04796 and lower. These instruments contained Rev. A of the A16 combinning board (P/N 03580-66536). The full schematic and parts location are shown on page 8-xx.

CHANGE NO. Δ 21:
Applies to instruments having a serial number 2030A06029 and lower.

These instruments contained Rev. A of the A13 Deflection amplifier (P/N 03580-66513) and no A40 Rear Panel Adjustment board. The following figure and parts list are for the A13 Rev. A board.

Should an A13 Rev. B board be used to replace an A13 Rev. A board then insert the following components into the Rev. B circuit board. The locations for these components are silkscreened on the Rev. B board.

| | | |
|---|---|---|
| A13R37 | 100 ohm | 0757-0401 |
| A13R38 | 100 ohm | 0757-0401 |
| A13R39 | 10k ohm | 2100-3210 |

HEWLETT PACKARD

# CATHODE-RAY TUBE WARRANTY AND INSTRUCTIONS

The cathode-ray tube (CRT) supplied in your Hewlett-Packard Instrument and replacement CRT's purchased from -hp- are warranted by the Hewlett-Packard Company against electrical failure for a period of one year from the date of shipment from Colorado Springs. Broken tubes and tubes with phosphor or mesh burns are not included under this warranty. No other warranty is expressed or implied.

## INSTRUCTION TO CUSTOMERS

If the CRT is broken when received, a claim should be made with the responsible carrier. All warranty claims with Hewlett-Packard should be processed through your nearest Hewlett-Packard Sales/Service Office (listed at rear of instrument manual).

## INSTRUCTIONS TO SALES/SERVICE OFFICE

Return defective CRT in the replacement CRT packaging material. If packaging material is not available, contact CRT Customer Service in Colorado Springs. The Colorado Springs Division must evaluate all CRT claims for customer warranty, Material Failure Report (MFR) credit, and Heart System credit. A CRT Failure Report form (see reverse side of this page) must be completely filled out and sent with the defective CRT to the following address:

**HEWLETT-PACKARD COMPANY**
1900 Garden of the Gods Road
Colorado Springs, Colorado 80907

**Parcel Post Address:**
P.O. Box 2197
Colorado Springs, Colorado 80901

Attention: CRT Customer Service

Defective CRT's not covered by warranty may be returned to Colorado Springs for disposition. These CRT's, in some instances, will be inspected and evaluated for reliability information by our engineering staff to facilitate product improvements. The Colorado Springs Division is equipped to safely dispose of CRT's without the risks involved in disposal by customers or field offices. If the CRT is returned to Colorado Springs for disposal and no warranty claim is involved, write "Returned for Disposal Only" in item No. 5 on the form.

Do not use this form to accomplish CRT repairs. In order to have a CRT repaired, it must be accompanied by a customer service order (repair order) and the shipping container must be marked "Repair" on the exterior.

# Table of Contents

Section I. GENERAL INFORMATION ..... Page 1-1
1-1. Description ..... 1-1
1-4. Specifications ..... 1-1
1-7. Options ..... 1-1
1-9. Warranty Exceptions ..... 1-1
1-11. Accessories Supplied ..... 1-1
1-13. Accessories Available ..... 1-1
1-15. Instrument and Manual Identification ..... 1-1

Section II. INSTALLATION ..... Page 2-1
2-1. Introduction ..... 2-1
2-3. Initial Inspection ..... 2-1
2-5. Power Requirements ..... 2-1
2-7. Power Cords and Receptacles ..... 2-1
2-9. Grounding Requirements ..... 2-1
2-12. Environmental Requirements ..... 2-2
2-13. Operating and Storage Temperature (Standard 3580A) ..... 2-2
2-14. Operating and Storage Temperature (Option 001) ..... 2-2
2-15. Installation ..... 2-2
2-17. Repackaging for Shipment ..... 2-2

Section III. OPERATING INSTRUCTIONS ..... Page 3-1
3-1. Introduction ..... 3-1
3-3. About the Spectrum Analyzer ..... 3-1
3-6. Operating Features ..... 3-1
3-8. Controls, Connectors and Indicators ..... 3-1
3-10. General Operating Information ..... 3-1
3-11. Input Cable Requirements ..... 3-1
3-13. Input Impedance ..... 3-4
3-16. Input Constraints ..... 3-4
3-20. Grounding ..... 3-4
3-24. Ground Loops ..... 3-5
3-28. Measurement Configurations ..... 3-5
3-32. Amplitude Modes ..... 3-6
3-34. Absolute/Relative Measurements ..... 3-6
3-37. Overload Indicator ..... 3-6
3-39. Maximum Input Level ..... 3-7
3-41. Sensitivity ..... 3-7
3-49. Dynamic Range ..... 3-8
3-51. Amplitude Measurements (Linear Mode) ..... 3-8
3-66. Amplitude Measurements (Log Mode) ..... 3-11
3-72. Amplitude Accuracy ..... 3-11
3-77. Internal Cal Signal ..... 3-12
3-80. Bandwidth Setting ..... 3-12
3-96. Frequency Setting ..... 3-15
3-103. Frequency Span Setting ..... 3-16
3-108. Frequency Out of Range ..... 3-16
3-113. Sweep Modes ..... 3-17
3-123. Sweep Time and Sweep Rate ..... 3-19
3-143. External Triggering ..... 3-20
3-147. Adaptive Sweep ..... 3-21
3-158. Digitally-Stored Display ..... 3-22
3-163. Recorder Outputs ..... 3-23
3-171. Tracking Oscillator Output ..... 3-24
3-175. Tracking Oscillator Input ..... 3-24
3-178. L.O. Output ..... 3-24
3-182. Option 001 ..... 3-25
3-187. Option 002 ..... 3-25
3-191. Basic Operating Procedures ..... 3-26
3-192. Instrument Turn On ..... 3-26
3-195. Frequency Calibration Procedure (Log Sweep Only) ..... 3-27
3-199. Amplitude Calibration Procedure ..... 3-27
3-203. Input Probe Compensation ..... 3-28
3-205. Familiarization Exercise ..... 3-29
3-207. Technique for Measuring Noise ..... 3-30

Section IV. THEORY OF OPERATION ..... Page 4-1
4-1. Introduction ..... 4-1
4-3. Simplified Block Diagram Description ..... 4-1
4-5. Amplitude Section ..... 4-1
4-16. Frequency and Sweep Section ..... 4-2
4-22. Digital Storage Section ..... 4-2
4-27. Frequency Display Section ..... 4-2
4-32. Functional Description ..... 4-3/4-4
4-33. Amplitude Section ..... 4-3/4-4
4-72. Frequency and Sweep Section ..... 4-10
4-117. Digital Storage and Display Sections ..... 4-18
4-167. Frequency Counter and Display ..... 4-26

Section V. MAINTENANCE ..... Page 5-1
5-1. Introduction ..... 5-1
5-3. Recommended Test Equipment ..... 5-1
5-5. Performance Tests ..... 5-1
5-7. Test Card ..... 5-1
5-9. Frequency Tests ..... 5-1
5-12. Display Accuracy Tests ..... 5-3
5-13. Sweep Tests ..... 5-3
5-18. Amplitude Tests ..... 5-4
5-28. Bandwidth Tests ..... 5-8

## Table of Contents (Cont'd)


| Section | | Page |
|---|---|---|
| 5-30. | Dynamic Range Tests (Noise Tests) | 5-9 |
| 5-36. | IF Feedthru and Zero Best Response Tests | 5-11 |
| 5-38. | Input Impedance Tests | 5-12 |
| 5-40. | Output Tests | 5-13 |
| 5-44. | Balanced Input Tests (Option 002 Only) | 5-14 |
| 5-48. | Adjustment Procedure | 5-15 |
| 5-50. | Test Point and Adjustment Locations | 5-15 |
| 5-53. | Power Supply Tests and Adjustments | 5-16 |
| 5-58. | Display Adjustments | 5-16 |
| 5-63. | Sweep Alignment | 5-17 |
| 5-68. | Line Generator Adjustments | 5-18 |
| 5-70. | I.F. Filter Alignment | 5-19 |
| 5-74. | Amplitude Calibration | 5-20 |
| 5-81. | Mixer Balance Adjustments | 5-24 |
| 5-84. | Adaptive Marker Adjustment | 5-25 |

| Section | | Page |
|---|---|---|
| VI. | REPLACEABLE PARTS | 6-1 |
| 6-1. | Introduction | 6-1 |
| 6-4. | Ordering Information | 6-1 |
| 6-6. | Non-Listed Parts | 6-1 |
| 6-8. | Proprietary Parts | 6-1 |

| Section | | Page |
|---|---|---|
| VII. | TROUBLESHOOTING AND CIRCUIT DIAGRAMS | 7-1 |
| 7-1. | Introduction | 7-1 |
| 7-3. | Troubleshooting and Preventive Maintenance | 7-1 |
| 7-4. | General Troubleshooting Procedures | 7-1 |
| 7-8. | A2 Board BTO Troubleshooting | 7-1 |
| 7-10. | A3 Board Troubleshooting | 7-1 |
| 7-12. | A7 Board | 7-4 |
| 7-19. | High Voltage Power Supply | 7-5 |
| 7-25. | Crystal Replacement | 7-6 |
| 7-28. | CRT Replacement | 7-6 |
| 7-30. | Battery Replacement (Option 001 Only) | 7-6 |
| 7-34. | Cleaning and Lubricating Rotary Switches | 7-6(a) |
| 7-37. | Factory Selected Components | 7-6(a) |
| 7-40. | Schematic Diagrams | 7-7 |

| Section | | Page |
|---|---|---|
| VIII. | BACKDATING | 8-1 |
| 8-1. | Introduction | 8-1 |


## LIST OF TABLES


| Table | | Page |
|---|---|---|
| 1-1. | Specifications | 1-0 |
| 1-2. | General Information | 1-2 |
| 3-1. | Operating Features | 3-1 |
| 3-2. | Maximum Input Levels | 3-7 |
| 3-3. | Frequency Resolution | 3-14 |
| 3-4. | Recommended Bandwidths (LOG Sweep) | 3-18 |
| 3-5. | Optimum Sweep Time Settings | 3-20 |
| 3-6. | Control Settings (Amplitude Calibration) | 3-28 |
| 4-1. | Linear Amplifier Gain | 4-7 |
| 4-2. | Video Output Circuits (Log 1 dB Mode) | 4-10 |
| 4-3. | Qualifier Inputs | 4-11 |
| 4-4. | Ramp Generator Instructions | 4-12 |
| 4-5. | Dial Mixing Amplifier Gain | 4-15 |
| 5-1. | Recommended Test Equipment | 5-2 |
| 5-2. | Frequency Span Test | 5-3 |
| 5-3. | Conversion Table | 5-5 |
| 5-4. | Log Amplitude Tests | 5-6 |
| 5-5. | Linear Amplitude Tests | 5-6 |

| Table | | Page |
|---|---|---|
| 5-6. | Amplitude Ref Level Tests (Linear Mode) | 5-6 |
| 5-7. | Amplitude Ref Level Tests (Log Mode) | 5-7 |
| 5-8. | First Input Attenuator Test | 5-7 |
| 5-9. | Second Input Attenuator Test | 5-7 |
| 5-10. | Frequency Response Tests | 5-8 |
| 5-11. | 300 Hz thru 10 Hz Bandwidth Tests | 5-9 |
| 5-12. | 3 Hz and 1 Hz Bandwidth Tests | 5-9 |
| 5-13. | Balanced Input Frequency Response Tests | 5-15 |
| 5-14. | Conversion Table | 5-21 |
| 6-1. | Standard Abbreviations | 6-1 |
| 6-2. | Code List of Manufacturers | 6-2 |
| 6-3. | Replaceable Parts | 6-3 |
| 7-1. | Conditions for Single Stepping A3 Logic | 7-2 |
| 7-2. | Excitation Table for J-K Flip-Flop | 7-3 |
| 7-3. | Factory Selected Components | 7-6(a) |
| 7-4. | Assembly Cross Reference | 7-7 |

## LIST OF ILLUSTRATIONS


| Figure | | Page |
|---|---|---|
| 2-1. | Power Receptacles | 2-1 |
| 3-1. | Front Panel | 3-2 |
| 3-2. | Rear Panel | 3-3 |
| 3-3. | Equivalent Input Circuit | 3-4 |
| 3-4. | Graph $Z_t$ vs. Frequency | 3-4 |
| 3-5. | Power Line Ground Loop | 3-5 |
| 3-6. | Measurement Configurations | 3-6 |
| 3-7. | Input Section | 3-7 |
| 3-8. | Maximum Input Index | 3-7 |
| 3-9. | Noise vs. Frequency | 3-8 |
| 3-10. | Amplitude Section (Linear Mode) | 3-9 |
| 3-11. | Amplitude Section (Log Mode) | 3-11 |
| 3-12. | Cal Signal | 3-12 |
| 3-13. | Frequency Tuning | 3-12 |
| 3-14. | IF Filter Response | 3-13 |
| 3-15. | Response of CW Signals | 3-13 |
| 3-16. | Two Signals in Passband | 3-14 |
| 3-17. | Large Signal Hides Small Signal | 3-14 |
| 3-18. | Small Signal Resolved | 3-14 |
| 3-19. | Noise Sidebands (1 Hz BW) | 3-14 |
| 3-20. | Zero Response (300 Hz BW) | 3-15 |
| 3-21. | Amplitude vs. Time | 3-16 |
| 3-22. | Frequency Out of Range | 3-16 |
| 3-23. | Margin Below 0 Hz | 3-16 |
| 3-24. | Frequency vs. Time (LOG Sweep) | 3-18 |
| 3-25. | Log Sweep (300 Hz BW) | 3-18 |
| 3-26. | Log Amplitude vs. Log Freq. Plot of 20 kHz Notch Filter (30 Hz BW) | 3-19 |
| 3-27. | Plot Using Conventional Sweep (15 minutes) | 3-21 |
| 3-28. | Plot Using Adaptive Sweep | 3-21 |
| 3-29. | Stored Trace and Current Trace Displayed Simultaneously | 3-22 |
| 3-30. | Store Button Released | 3-23 |
| 3-31. | Tracking Oscillator | 3-24 |
| 3-32. | Input Configurations (Option 002) | 3-25 |
| 3-33. | Voltage Selection | 3-27 |
| 3-34. | Typical Turn On Display | 3-27 |
| 3-35. | Probe Compensation | 3-29 |
| 4-1. | Simplified Block Diagram | 4-3/4-4 |
| 4-2. | Typical Crystal Filter Stage | 4-5 |
| 4-3. | Crystal Filter | 4-5 |
| 4-4. | IF Amplifier | 4-6 |
| 4-5. | Linear Amplifier | 4-7 |
| 4-6. | Log Amplifier | 4-8 |
| 4-7. | Typical Log Amplifier Stage | 4-8 |
| 4-8. | Log Amplifier Input and Output Levels | 4-9 |
| 4-9. | Video Output | 4-9 |
| 4-10. | Frequency and Sweep Section | 4-10 |
| 4-11. | Adaptive Sweep Routine | 4-11 |
| 4-12. | Linear Sweep Generator | 4-12 |
| 4-13. | ASM Chart (Adaptive Sweep) | 4-13 |
| 4-14. | Frequency Out of Range | 4-15 |
| 4-15. | VTO and Tracking Oscillator (AS) | 4-16 |
| 4-16. | Precision Monostable | 4-17 |
| 4-17. | Basic Log Sweep Generator | 4-17 |
| 4-18. | Overall Log Sweep Generator | 4-18 |
| 4-19. | Storing a Trace | 4-18 |
| 4-20. | Displaying a Stored Trace | 4-19 |
| 4-21. | Digital Storage and Display Sections | 4-20 |
| 4-22. | Digital Storage Section (Store Mode) | 4-22 |
| 4-23. | Store Function ASM Chart | 4-23 |
| 4-24. | Equivalent Circuit (State 1) | 4-24 |
| 4-25. | Equivalent Circuit (State 3) | 4-25 |
| 4-26. | Store Button Released | 4-26 |
| 4-27. | Time Base Generator | 4-26 |
| 4-28. | Counter and Display | 4-27 |
| 5-1. | 10 kHz CAL Signal | 5-3 |
| 5-2. | Proper Hookup | 5-5 |
| 5-3. | Spurious Response Test | 5-11 |
| 5-4. | Common Mode Rejection Test | 5-15 |
| 5-5. | Symmetry Adjustment | 5-20 |
| 5-6. | Proper Hookup | 5-21 |
| 5-7. | Oscillator Output Adjustment | 5-25/5-26 |
| 5-8. | Test Point and Adjustment Locations | 5-27/5-28 |
| 7-1. | Mother Board (A1) Component Location Diagram | 7-10 |
| 7-2. | Functional Block Diagram | 7-11/7-12 |
| 7-3. | Amplitude Section Detailed Block Diagram | 7-13/7-14 |
| 7-4. | Input Assembly (A9) and Balanced Input Assembly (A18) Schematics and Component Location Diagrams | 7-15/7-16 |
| 7-5. | IF Filter Assembly (A5) Schematic and Component Location Diagram | 7-17/7-18 |
| 7-6. | Detector Assembly (A4) Schematic and Component Location Diagram | 7-19/7-20 |
| 7-7. | Sweep Generator (A3) Schematic and Component Location Diagram | 7-21/7-22 |
| 7-8. | Frequency Control Circuits (A14, A15, A16) Schematic and Component Location Diagrams | 7-23/7-24 |
| 7-8(a). | Frequency Counter and Display Circuits (A33) Schematic and Component Location Diagrams | 7-24(a)/7-24(b) |
| 7-9. | VTO and Tracking Oscillator Assembly (A2) Schematic and Component Location Diagram | 7-25 |
| 7-10. | Digital Storage Assembly (A7) Schematic and Component Location Diagram | 7-27 |
| 7-11. | Control Assembly (A8), Deflection Amplifier (A13) and High Voltage Power Supply (A11) Schematics and Component Location Diagrams | 7-29/7-30 |
| 7-12. | Low Voltage Power Supply (A6) Schematic and Component Location Diagram, and Power Input Module (A20) Schematic | 7-31/7-32 |
| 8-1. | Balanced-Terminated Input Configuration | 8-1 |
| 8-2. | Balanced Input Assembly | 8-1 |
| 8-3. | Control Board Circuit Change | 8-3 |
| 8-4. | Old Style Crystal | 8-4 |
| 8-5. | New Style on Modified A2 Board | 8-4 |
| 8-6. | Control, Deflection, (A8, A11, A13) and Schematics and Component Location Diagrams | 8-7/8-8 |

HEWLETT PACKARD

## SAFETY SUMMARY

**The following general safety precautions must be observed during all phases of operation, service, and repair of this instrument. Failure to comply with these precautions or with specific warnings elsewhere in this manual violates safety standards of design, manufacture, and intended use of the instrument. Hewlett-Packard Company assumes no liability for the customer's failure to comply with these requirements. This is a Safety Class 1 instrument.**

### GROUND THE INSTRUMENT

To minimize shock hazard, the instrument chassis and cabinet must be connected to an electrical ground. The instrument is equipped with a three-conductor ac power cable. The power cable must either be plugged into an approved three-contact electrical outlet or used with a three-contact to two-contact adapter with the grounding wire (green) firmly connected to an electrical ground (safety ground) at the power outlet. The power jack and mating plug of the power cable meet International Electrotechnical Commission (IEC) safety standards.

### DO NOT OPERATE IN AN EXPLOSIVE ATMOSPHERE

Do not operate the instrument in the presence of flammable gases or fumes. Operation of any electrical instrument in such an environment constitutes a definite safety hazard.

### KEEP AWAY FROM LIVE CIRCUITS

Operating personnel must not remove instrument covers. Component replacement and internal adjustments must be made by qualified maintenance personnel. Do not replace components with power cable connected. Under certain conditions, dangerous voltages may exist even with the power cable removed. To avoid injuries, always disconnect power and discharge circuits before touching them.

### DO NOT SERVICE OR ADJUST ALONE

Do not attempt internal service or adjustment unless another person, capable of rendering first aid and resuscitation, is present.

### USE CAUTION WHEN EXPOSING OR HANDLING THE CRT

Breakage of the Cathode-ray Tube (CRT) causes a high-velocity scattering of glass fragments (implosion). To prevent CRT implosion, avoid rough handling or jarring of the instrument. Handling of the CRT shall be done only by qualified maintenance personnel using approved safety mask and gloves.

### DO NOT SUBSTITUTE PARTS OR MODIFY INSTRUMENT

Because of the danger of introducing additional hazards, do not install substitute parts or perform any unauthorized modification to the instrument. Return the instrument to a Hewlett-Packard Sales and Service Office for service and repair to ensure that safety features are maintained.

### DANGEROUS PROCEDURE WARNINGS

Warnings, such as the example below, precede potentially dangerous procedures throughout this manual. Instructions contained in the warnings must be followed.

**WARNING**

**Dangerous voltages, capable of causing death, are present in this instrument. Use extreme caution when handling, testing, and adjusting.**

## SAFETY SYMBOLS

**General Definitions of Safety Symbols Used On Equipment or In Manuals.**

Instruction manual symbol: the product will be marked with this symbol when it is necessary for the user to refer to the instruction manual in order to protect against damage to the instrument.

Indicates dangerous voltage (terminals fed from the interior by voltage exceeding 1000 volts must be so marked).

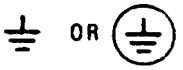


Protective conductor terminal. For protection against electrical shock in case of a fault. Used with field wiring terminals to indicate the terminal which must be connected to ground before operating equipment.

Low-noise or noiseless, clean ground (earth) terminal. Used for a signal common, as well as providing protection against electrical shock in case of a fault. A terminal marked with this symbol must be connected to ground in the manner described in the installation (operating) manual, and before operating the equipment.

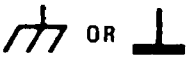


Frame or chassis terminal. A connection to the frame (chassis) of the equipment which normally includes all exposed metal structures.

Alternating current (power line).

Direct current (power line).

Alternating or direct current (power line).

**DANGER**

The DANGER sign denotes a hazard. It calls attention to an operating procedure, practice, condition or the like, which could result in injury or death to personnel even during normal operation.

**WARNING**

The WARNING sign denotes a hazard. It calls attention to a procedure, practice, condition or the like, which, if not correctly performed or adhered to, could result in injury or death to personnel.

**CAUTION**

The CAUTION sign denotes a hazard. It calls attention to an operating procedure, practice, condition or the like, which,if not correctly performed or adhered to, could result in damage to or destruction of part or all of the product.

**NOTE:** The NOTE sign denotes important information. It calls attention to procedure, practice, condition or the like, which is essential to highlight.

## Table 1-1. Specifications.

### FREQUENCY

**Frequency Display Accuracy:** ± 3.5 Hz;
0°C to 55°C, 1 Hz and 3 Hz Bandwidths only.

**Display Accuracy:** Frequency error between any two points is less than ± 2% of their indicated separation.

| **Bandwidths:** (accuracy ± 15%) | 1 Hz (25°C ± 5°C) | 3 Hz | 10 Hz | 30 Hz | 100 Hz | 300 Hz |
|---|---|---|---|---|---|---|

### AMPLITUDE

| **Amplitude Accuracy:** | Log | Linear |
|---|---|---|
| Frequency Response:* | | |
| 20 Hz–20 kHz | ± 0.3 dB | ± 3% |
| 5 Hz–50 kHz | ± 0.5 dB | ± 5% |
| Switching Between Bandwidths (25°C): | | |
| 3 Hz–300 Hz | ± 0.5 dB | ± 5% |
| 1 Hz–300 Hz | ± 1 dB | ± 10% |
| Amplitude Display: | ± 2 dB | ± 2% |
| Input Attenuator: | ± 0.3 dB | ± 3% |
| Amplitude Reference Level: (IF attenuator) | | |
| most sensitive range | + 1 dB | ± 10% |
| all other ranges | ± 1 dB | ± 3% |

*Standard 3580A and Option 002 unbalanced input.

**Dynamic Range:**
Display Range (Log 10 dB mode): > 80 dB

Noise Level: "Noise level is measured with 50 ohms placed across the input terminals. On the 30 to 300 Hz bandwidth use maximum display smoothing. The noise level as a function of frequency is:" (Refer to noise vs frequency graph).

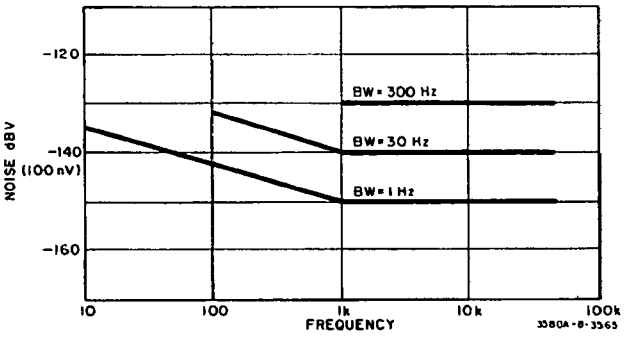


Distortion (THD and 1M):
Std 3580A: > 80 dB below input reference level.
Option 002: > 80 dB below input reference level for signals below 0 dBm and above 100 Hz.

Spurious Responses: > 80 dB below input reference level
Line Related Spurious: > 80 dB below input reference level or -140 dBV (0.1 μV)
Below -90 dBm for Option 002 Balanced-Terminated Input.

IF Feedthru:

| Input | Feedthru |
|---|---|
| > 10 V | -60 dB or lower |
| < 10 V | -70 dB or lower |

Zero Response: > 30 dB below input reference level

**Noise Sidebands (1 Hz Bandwidth):** more than 70 dB below peak of CW signal ± 10 Hz away from center of response.

### SWEEP

**Sweep Times:** 0.1 sec to 2,000 sec

Accuracy: ± 5%

**Log Sweep:** 20 Hz to 43 kHz

Accuracy: 20% after 3 continuous sweeps

### BALANCED INPUT (Option 002 only)

**Frequency Response $\Delta_1$:** ± 0.5 dB, 40 Hz to 20 kHz for signals below + 20 dBm.

**Common Mode Rejection:** > 70 dB at 60 Hz

### OUTPUTS

**Recorder Outputs:**
X-Asis: 0 V to + 5 V ± 2.5%
Y-Asis: 0 V to + 5 V ± 2.5%

**Tracking Oscillator Output:**

Frequency Response:
Std 3580A: ± 3%, 5 Hz to 50 kHz
Opt. 002: ± 0.5 dB, 100 Hz to 20 kHz, 10 kHz Reference, 600 Ω load.

**L.O. Output:** Frequency of output signal varies from 1.0 MHz to 1.5 MHz as analyzer frequency is tuned from 0 Hz to 50 kHz

Frequency Accuracy: The tuned frequency can be read to an accuracy of ± 5 Hz using an external counter.

$\Delta_1$ Serial No. 1312A-00465 and below: Change Frequency Response Specification to ± 0.5 dB, 300 Hz to 20 kHz.

$\Delta_{16}$ Serial No. 1415A04280 and below: Change Frequency Dial Accuracy to ± 100 Hz, 20° to 30°C; ± 300 Hz 0° to 55°C.

# SECTION I
# GENERAL INFORMATION

## 1-1. DESCRIPTION.

1-2. The Hewlett-Packard Model 3580A Spectrum Analyzer is a low frequency instrument that has been optimized for use in the 5 Hz to 50 kHz range. The 3580A functions as a signal analyzer or as a network analyzer. When used as a signal analyzer, the 3580A provides a graphical display of the spectral components of an input signal. When used as a network analyzer, the 3580A plots the amplitude vs. frequency characteristics of 2-port networks such as amplifiers, attenuators and filters.

1-3. The major features of the 3580A include a digitally stored display, adaptive sweep, six selectable bandwidths (1 Hz - 300 Hz), 30 nV sensitivity and 80 dB dynamic range. These standard features, along with optional balanced inputs and an internal rechargeable battery pack, make the 3580A ideally suited for communications, geophyical, oceanography and metrology applications.

## 1-4. SPECIFICATIONS.

1-5. Table 1-1 is a complete list of the Model 3580A critical specifications that are controlled by tolerances. Table 1-2 contains general information describing the operating characteristics of the 3580A.

1-6. Any changes in specifications due to manufacturing, design, or traceability to the U.S. National Bureau of Standards are included in Table 1-1 in this manual. Specifications listed in this manual supersede all previous specifications for the Model 3580A.

## 1-7. OPTIONS.

1-8. There are three options available for the 3580A. Option 001 and Option 002 are listed in the following table. For further information concerning those options, refer to Table 1-2 or Section III in this manual or contact the nearest -hp- Sales and Service Office. Option 910 is an additional Operating and Service Manual.

| 3580A Option (Factory Installed) | Description |
|---|---|
| 001* | Internal rechargeable battery pack and front panel cover for complete portability |
| 002 | Balanced inputs; balanced tracking oscillator output |

*Field Installation Kit -hp- 11095A Battery Pack only. Front Panel Cover Accessory -hp- 10101B.

## 1-9. Warranty Exceptions.

1-10. Batteries in Option 001 instruments are warranted for 90 days.

## 1-11. ACCESSORIES SUPPLIED.

1-12. The following is a list of accessories supplied with the 3580A.

| Item | Qty. | -hp- Part No. |
|---|---|---|
| Accessory Kit Includes the following: | 1 ea. | 03580-84401 |
| PC Board Extender (15 pin) | 2 ea. | 5060-0049 |
| PC Board Extender (10 pin) | 2 ea. | 5060-5917 |
| Fuse: 0.25 A, 250 V Normal Blo (for 220 V/240 V operation) | 1 ea. | 2110-0004 |

## 1-13. ACCESSORIES AVAILABLE.

1-14. The following is a list of Hewlett-Packard accessories available for use with the Model 3580A:

| -hp- Model | Description |
|---|---|
| 10004B | Voltage Divider Probe |
| 10101B | Front Panel Cover Assembly |
| 7035B Opt. 020 | X/Y Recorder |
| 197A or 198A | Oscilloscope Camera |

## 1-15. INSTRUMENT AND MANUAL IDENTIFICATION.

1-16. The instrument serial number is located on the rear panel. Hewlett-Packard uses a two-section serial number consisting of a four-digit prefix and a five-digit suffix. A letter between the suffix and prefix identifies the country in which the instrument was manufactured (A = USA, G = West Germany, J = Japan, U = United Kingdom). All correspondence with Hewlett-Packard should include the complete serial number.

1-17. If the serial number of your instrument is lower than the one on the title page of this manual, refer to Section VIII for backdating information that will adapt this manual to your instrument.

## Table 1-2. General Information.

**INPUT CHARACTERISTICS (Standard 3580A)**

**Connector:** female banana plug

**Impednace:** 1 megohm, 30 pF

**Maximum (ac) Input Level:**

| Input Sensitivity | Maximum Input |
|---|---|
| + 30 dB (20 V) to -10 dB (0.2 V) | 100 V rms |
| -20 dB (0.1 V to -70 dB (0.2 mV) | 50 V rms |

Maximum (dc) Input Voltage: ± 100 Vdc

**Coupling:** capacitive

**DC Isolation:** none (input common referenced to frame ground)

**INPUT CHARACTERISTICS (Option 002)**

**Selectable Input Configurations:**

Unbalanced
Balanced Bridged
Balanced Terminated

**Connector:** female banana plug

**Impedance:**

Unbalanced: 1 megohm, 40 pF
Greater than 12 K (typically 14 K at 1 kHz)
Terminated: 600 ohms or 900 ohms

**Maximum Input Levels:**

Unbalanced: same as Standard 3580A
Bridge: 100 V dc max, 35 V rms ac max
Terminated: + 27 dBm at 0 V dc. (see Paragraph 3-187)

**DC Isolation:**

Unbalanced: none (input common referenced to frame ground)
Bridged and Terminated: floating input

**AMPLITUDE CHARACTERISTICS:**

**Amplitude Modes:**

Linear: Absolute measurements in rms volts (average responding): relative measurements in percent of full scale.

Log 10dB/div.: Absolute measurements in dBV (1 V rms = 0 dBV) or dBm/600 ohms; relative measurements in dB. Display sensitivity is 10 dB per division; display range is > 80 dB.

Log 1 dB/div.: Display sensitivity is 1 dB per division; display range is 10 dB. Any 10 dB portion of 80 dB range can be displayed by changing the AMPLITUDE REF LEVEL control setting.

**Full-Scale Sensitivity:**

Linear Mode:
Calibrated: 20 V rms to 0.1 μV rms (18 ranges)
Uncalibrated: 100 V rms to 0.2 μV rms

Log 10 dB Mode:
Calibrated: + 30 dBV/dBm to -70 dBV/dBm (11 ranges)
Uncalibrated: + 40 dBV/dBm to -60 dBV/dBm

**Overload Indicator:** An LED Overload indicator on the front panel lights to indicate that the input signal exceeds the maximum (full scale) input level set by the INPUT SENSITIVITY switch and amplitude VERNIER.

**Internal Calibration Signal:** An internally generated calibration signal can be used to calibrate the amplitude section (following input attenuator) to an accuracy of ± 1.5% at 10 kHz. The calibration signal can also be used to verify the frequency accuracy of the instrument.

**FREQUENCY CHARACTERISTICS:**

**Frequency Range:** 5 Hz to 50 kHz

**Frequency Control:** The front panel FREQUENCY control tunes the frequency of the analyzer over the 0 Hz to 50 kHz range. The control can be used to set either the start or center frequency of linear sweeps.

Δ16 **Course and Fine Tuning:** Course and fine tuning is performed by using the concentric knobs in the upper right corner of the front panel. The knob closest to the front panel controls the course tuning. The knob furthest from the front panel controls the fine tuning. The fine tuning knob is also used to set the displayed frequency to 20 Hz in the LOG ZERO sweep mode.

**Frequency Display:** Indicates start or center frequency in Hz. In the Manual Mode, the Frequency Display indicates the marker frequency.

Range: 00.0 kHz to approximately 50.8 kHz.

Resolution: 20 Hz (one minor division)

**Typical Frequency Stability:** ± 10 Hz/hr. after 1 hour; ± 5 Hz/°C

**Bandwidth Settings:** 1 Hz, 3 Hz, 10 Hz, 30 Hz, 100 Hz, 300 Hz

Bandpass Characteristic: closely approximates a gaussian response.

Shape Factor: 10:1 on 1 Hz thru 100 Hz bandwidths; 8:1 on 300 Hz bandwidth

Equivalent Noise Bandwidth: Typically 12% wider than *absolute* 3 dB bandwidth.

**Display Smoothing (noise filtering):**

3 Settings: min, med, max

Response: determined by Bandwidth setting.

**SWEEP CHARACTERISTICS:**

**Sweep Modes:**

Repetitive: The instrument sweeps continuously over the selected frequency range.

Single: The instrument sweeps one time over the selected frequency range and stops at the end frequency

Reset: Sweep is reset to left-hand side of screen; instrument remains at start frequency of sweep.

Manual: The electronic sweep is disabled and a front panel potentiometer is used to manually sweep the frequency and the refresh trace on the CRT. The manual sweep fully duplicates the span of the electronic sweep.

Log Zero: Used to set the correct starting point for log sweep.

Log: Front panel frequency and sweep controls are disabled. The instrument sweeps logarithmically from 20 Hz

## Table 1-2. General Information (Cont'd).

to 43 kHz. The log sweep is repetitive; sweep time is approximately 5 seconds.

**Typical Sweep Linearity:** ± 1%

**Frequency Span Settings:** 0 Hz, 5 Hz/div to 5 kHz/div.

When the 0 Hz span setting is selected, the frequency sweep is disabled and the instrument remains at the frequency indicated on the frequency display. The display continues to sweep at the panel-selected rate. This provides a graphical display of amplitude vs. time.

**Overall Span:** 50 Hz to 50 kHz (10 span settings)

**Sweep Time Settings:** 0.01 sec/div. to 200 sec/div. (14 settings)

**Overall Sweep Time:** 0.1 sec to 2,000 sec

**Sweep Error Light:** A front panel LED indicator lights when sweep rate is too fast.

**Out of Range Indication:** The CRT display is cleared in areas where the sweep goes below 0 Hz or above 50 kHz.

**Adaptive Sweep:** The front panel Adaptive Sweep control is used to set a baseline threshold on the CRT. In areas where responses are below the baseline threshold, the instrument sweeps 20 to 25 times faster than the panel-selected rate. When the sweep reaches a response that rises above the baseline threshold, it backs up slightly, pauses to allow the IF Filter to settle and then sweeps slowly over the response at the panel-selected rate. By sweeping rapidly through unused portions of the spectrum, the Adaptive Sweep greatly reduces the measurement time for certain applications.

**External Triggering:** A rear panel External Trigger Input connector is provided to allow the frequency sweep to be remotely triggered by a contact closure or TTL logic levels. External triggering can be used in the Repetitive, Single or Log sweep mode.

**OUTPUTS:**

**Recorder Outputs:**

X-Axis: Supplies dc voltage corresponding to position of frequency sweep on CRT.

Output Voltage: 0 V (left-hand edge) to + 5 V (right-hand edge)

Output Resistance: 1 kilohm

Y-Axis: Supplies dc voltage proportional to amplitude.

Output Voltage: 0 V (bottom of screen) to + 5 V (top of screen).

Output Resistance: 1 kilohm

Pen Lift: Provides a contact closure during single sweeps. If Adaptive Sweep is used, closure is present only when instrument is sweeping slowly over a response.

**Tracking Oscillator Output:**

Frequency: 5 Hz to 50 kHz; tracks turned or swept frequency of instrument.

Output Level: 0 V to > 1 V rms into 600 Ω (adjustable)

Output Impedance: 600 ohms

Tracking Oscillator Input: Tracking oscillator output signal can be offset or frequency modulated by applying an external reference signal (about 100 kHz) to the rear panel Tracking Oscillator Input connector.

**L.O. Output:**

Frequency: Varies from 1.0 MHz to 1.5 MHz as 3580A frequency is tuned from 0 Hz to 50 kHz.

Output Level: Varies from about 300 mV p-p to 600 mV p-p depending on frequency.

Output Impedance: 1 kilohm

**GENERAL:**

**Operating Temperature Range:**

Standard 3580A: 0°C to 55°C

Option 001: 0°C to +40°C

**Storage Temperature Range:**

Standard 3580A: -40°C to +75°C

Option 001: -40°C to +50°C

**Charge Temperature Range (Option 001):** 0°C to +40°C

**Power Requirements:** 100 V, 120 V, 220 V or 240 V +5% -10%, 48 Hz to 440 Hz, 35 watts maximum

**Battery Characteristics (Option 001):**

Operating Time: 5 hours from full charge

Charge Time: 14 hours to recharge fully discharged battery pack

Battery Life: more than 100 charge/discharge cycles

Protection: The batteries are protected from excessive discharge by an automatic cut out.

**Dimensions:**

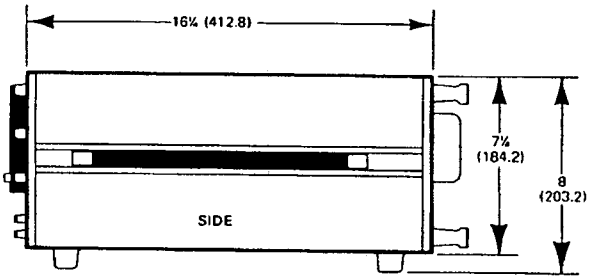


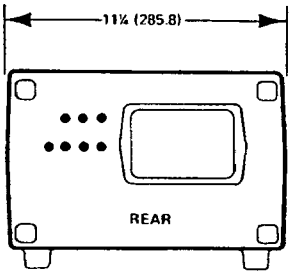


DIMENSIONS SHOWN IN INCHES AND (MILLIMETERS)

**Weight:**

Standard 3580A: Net 27 lbs.

Option 001: Net 35 lbs.

# SECTION II
# INSTALLATION

## 2-1. INTRODUCTION.

2-2. This section contains information and instructions necessary for installing and shipping the Model 3580A Spectrum Analyzer. Included are initial inspection procedures, power and grounding requirements, environmental information, installation instructions and instructions for repackaging for shipment.

## 2-3. INITIAL INSPECTION.

2-4. This instrument was carefully inspected both mechanically and electrically before shipment. It should be free of mars or scratches and in perfect electrical order upon receipt. To confirm this, the instrument should be inspected for physical damaged in transit. If the instrument was damaged in transit, file a claim with the carrier. Check for supplied accessories (Paragraph 1-11) and test the electrical performance of the instrument using the performance test procedures outlined in Section V. If there is damage or deficiency, see the warranty in the front of this manual.

## 2-5 POWER REQUIREMENTS.

2-6. The Model 3580A can be operated from any power source supplying 100 V, 120 V, 220 V or 240 V (+5% -10%), 48 Hz to 440 Hz. Power dissipation is 35 watts, maximum. Refer to Paragraph 3-192 (Section III) for the Instrument Turn On Procedure.

## 2-7. Power Cords And Receptacles.

2-8. Figure 2-1 illustrates the standard power receptacle (wall outlet) configurations that are used throughout the United States and in other countries. The -hp- part number shown directly below each receptacle drawing is the part number for a 3580A power cord equipped with the appropriate mating plug for that receptacle. If the appropriate power cord is not included with the instrument, notify the nearest -hp- Sales and Service Office and a replacement cord will be provided.

## 2-9. GROUNDING REQUIREMENTS.

2-10. To protect operating personnel, the National

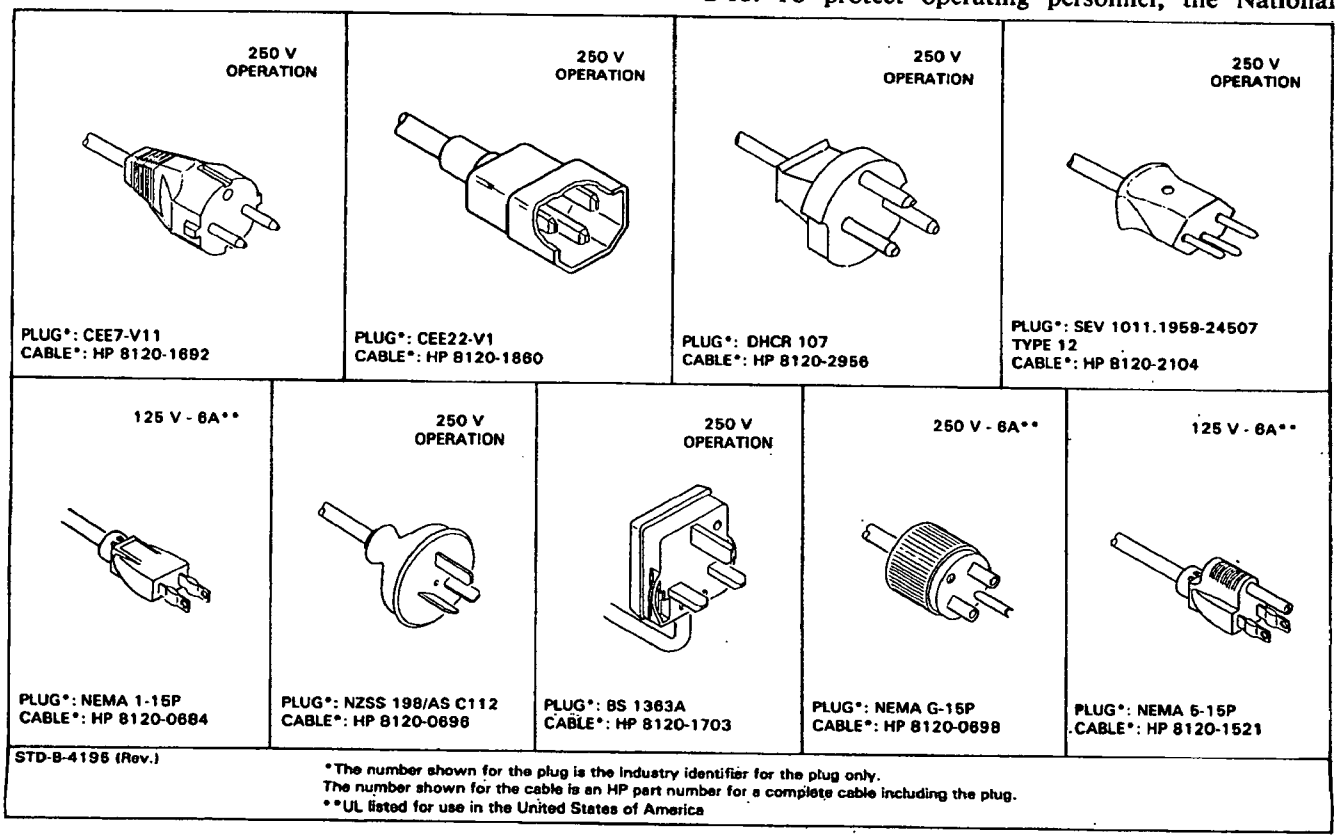


**Figure 2-1. Power Receptacles.**

Electrical Manufacturer's Association (NEMA) recommends that the instrument panel and cabinet be grounded. The Model 3580A is equipped with a three conductor power cable which, when plugged into an appropriate receptacle, grounds the instrument. The offset pin on the power plug is the ground connection.

2-11. For battery powered instruments (Option 001), the common binding post of the INPUT connector (Case Ground ⏚) should be connected to earth ground or to an appropriate system ground. *If a system ground is used, extra care should be taken to ensure that it is actually at ground potential and is not a voltage source.*

## 2-12. ENVIRONMENTAL REQUIREMENTS.

### 2-13. Operating and Storage Temperature (Standard 3580A).

Operating Temperature Range: 0°C to 55°C
Storage Temperature Range: -40°C to +75°C

### 2-14. Operating and Storage Temperature (Option 001).

Operating Temperature Range: 0°C to +40°C
Storage Temperature Range: -40°C to +50°C
Charge Temperature Range: 0°C to +40°C

## 2-15. INSTALLATION.

2-16. The Model 3580A is a portable instrument and does not require installation. The instrument is shipped with rubber feet and tilt stand in place, ready for use as a bench instrument.

## 2-17. REPACKAGING FOR SHIPMENT.

2-18. The following paragraphs contain a general guide for repackaging the instrument for shipment. Refer to Paragraph 2-19 if the original container is to be used; 2-20 if it is not. If you have any questions, contact the nearest -hp- Sales and Service Office (see Appendix B for office locations).

**NOTE**

*If the instrument is to be shipped to Hewlett-Packard for service, or repair, attach a tag to the instrument identifying the owner and indicating the service or repair to be accomplished. Include the model number and full serial number of the instrument. In any correspondence, identify the instrument by model number and full serial number.*

2-19. Place instrument in original container with appropriate packing material and seal well with strong tape or metal bands. If original container is not available, one can be purchased from your nearest -hp- Sales and Service Office.

2-20. If original container is not to be used, proceed as follows:

a. Wrap instrument in heavy paper, or plastic before placing in an inner container.

b. Place packing material around all sides of instrument and protect panel face with cardboard strips.

c. Place instrument and inner container in a heavy carton or wooden box and seal with strong tape or metal bands.

d. Mark shipping container "DELICATE INSTRUMENT," "FRAGILE," etc.

2-21. Option: Option 910 is an additional Operating and Service Manual -hp- Part Number 03580-90002.

# SECTION III
# OPERATING INSTRUCTIONS

## 3-1. INTRODUCTION.

3-2. This section contains complete operating instructions for the Model 3580A Spectrum Analyzer. Included is a brief description of the instrument, a description of controls, general operating information and basic operating procedures.

## 3-3. ABOUT THE SPECTRUM ANALYZER.

3-4. The first spectrum analyzers were introduced during World War II for the use in the development of pulse radar systems. Early spectrum analyzers were difficult to operate and interpret since they lacked such refinements as calibrated controls. They were, however, adequate tools which enabled scientists to observe the spectra of radar pulses and subsequently optimize the gain and bandwidth of radar receivers. Since that time, spectrum analyzers have evolved into general purpose instruments with unlimited applications in the RF and audio frequency ranges.

3-5. The 3580A is a low frequency spectrum analyzer designed specifically for use in the audio frequency range. It can be used as a signal analyzer or as a network analyzer. When used as a signal analyzer, the 3580A measures the amplitudes and frequencies of the spectral components of an input signal. When used as a network analyzer, the 3580A plots the amplitude vs. frequency characteristics of 2-port networks such as amplifiers, attenuators and filters.

## 3-6. Operating Features.

3-7. The 3580A has many unique operating features that make it versatile, easy to use and ideally suited for low-frequency work. The three most significant features are its digitally stored display, Adaptive Sweep and 1 Hz bandwidth. Details of these and other features outlined in Table 3-1 are given in the General Operating Section (Paragraph 3-10).

## 3-8. CONTROLS, CONNECTORS AND INDICATORS.

3-9. Figures 3-1 and 3-2 illustrate and describe the function of all front and rear panel controls, connectors and indicators. The description of each item keyed to the drawing within the figure.

## 3-10. GENERAL OPERATING INFORMATION.

## 3-11. Input Cable Requirements.

3-12. The input signal can be applied to the 3580A through a twisted pair, a shielded cable equipped with banana-plug connectors (-hp- 11000A Cable Assy.) or a 10:1 Voltage Divider Probe (-hp- 10004B). Input leads should be kept as short as possible to minimize extraneous pickup. When using a 10:1 Voltage Divider Probe, the probe must be compensated as outlined in Paragraph 3-203.

**Table 3-1. Operating Features.**

| Feature | Paragraph |
|---|---|
| High Input Impedance: 1 MΩ, 30 pF | 3-13 |
| Frequency Range: 5 Hz to 50 kHz | |
| Six Selectable Bandwidths: 1 Hz – 300 Hz | 3-80 |
| Calibrated Frequency Display: | 3-96 |
| 1. Selects start or center frequency of sweep | |
| 2. Coarse or fine tuning | |
| Eleven Frequency Span Settings: 0 Hz, 50 Hz – 50 kHz | 3-103 |
| Sweep Modes: | 3-13 |
| 1. Single or repetitive linear sweep | |
| 2. Manual Sweep | |
| 3. Log sweep | |
| Fourteen Sweep Time Settings: 0.1 sec – 2,000 sec. | 3-133 |
| Optimum Sweep Rate Indicator | 3-137 |
| Frequency Out-Of-Range Indication On CRT | 3-108 |
| Adaptive Sweep | 3-147 |
| Three Amplitude Modes: | 3-32 |
| 1. Linear: absolute measurements in rms volts; relative measurements in percent of full-scale. | 3-51 |
| 2. Log 10 dB: scale 10 dB/div; absolute measurements in dBV or dBm/600 ohms; relative measurements in dB; 80 dB dynamic range. | 3-66 |
| 3. Log 1 dB: scale 1 dB/div; 10 dB display range | |
| Measurement Range: | |
| 1. Calibrated: 0.1 μV rms (-140 dBV/dBm) full-scale to 20 V rms (+ 30 dBV/dBm) full-scale. | |
| 2. Uncalibrabed: 0.1 μV rms (-140 dBV/dBm) full-scale to 100 V rms (+ 40 dBV/dBm) full-scale. | |
| 80 dB Dynamic Range | 3-49 |
| Digitally Stored Display | 3-158 |
| Internal Calibration Signal | 3-77 |
| Recorder Outputs: | |
| 1. X-AXIS | 3-165 |
| 2. Y-AXIS | 3-168 |
| 3. PEN LIFT | 3-170 |
| Tracking Oscillator Output | 3-171 |
| Tracking Oscillator Input | 3-175 |
| L.O. Output | 3-178 |
| Portability, Battery Operation (Option 001) | 3-182 |
| Balanced Inputs, Balanced Tracking Oscillator Output (Option 002) | 3-187 |

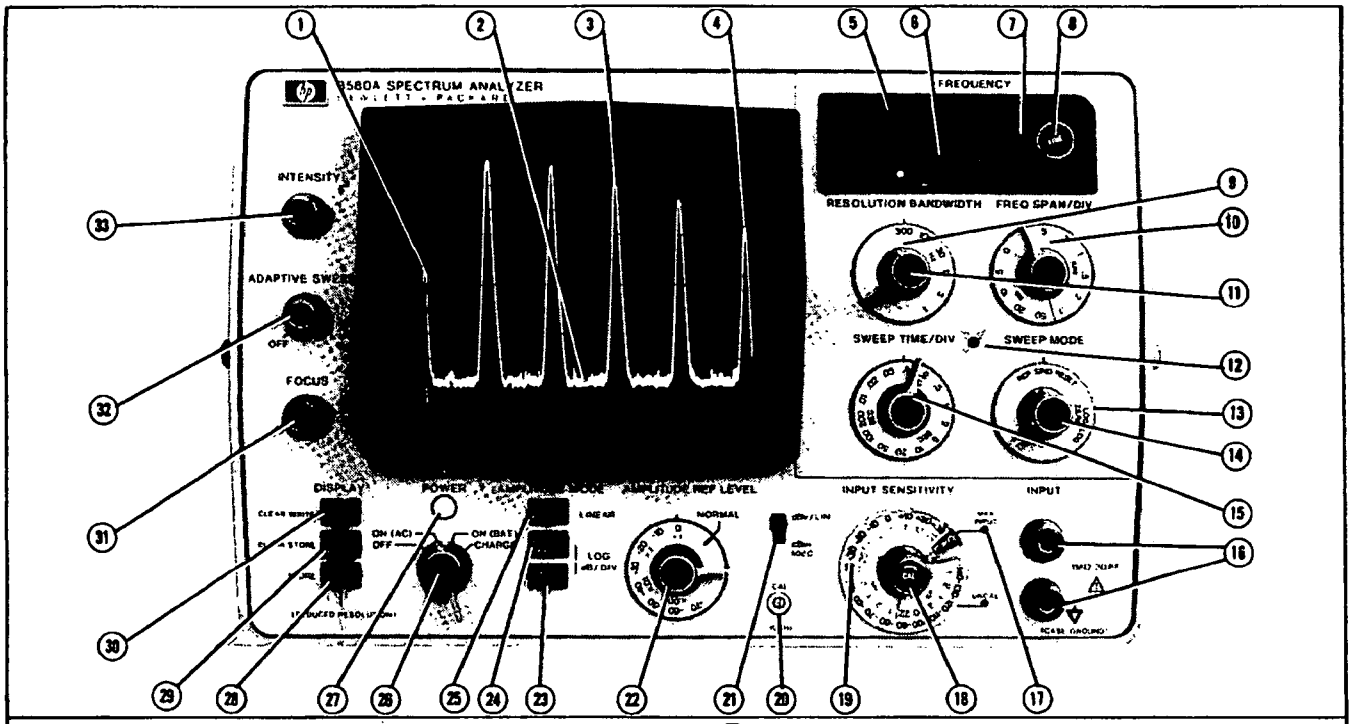


(1) LOG Markings: In the LOG 10 dB mode, these markings indicate signal amplitude in dB below full scale.

(2) Frequency Markings: These markings indicate 20 Hz, 200 Hz, 2 kHz and 20 kHz decade frequencies of log sweep. (Paragraph 3-125)

(3) CRT Display: (Paragraph 3-158).

(4) LIN Markings: In the LIN mode, these markings indicate signal amplitude in percent of full scale (1.0 = 100%, 0.4 = 40%, etc.).

(5) FREQUENCY Display: Indicates start or center frequency of linear sweep. The Frequency Display also indicates the frequency at which the manual sweep is set. In the LOG mode, the Frequency Display blanks (Paragraph 3-99).

(6) START/CTR Switch: When set to START position, FREQUENCY display indicates start frequency of linear sweep; when set to CTR position, FREQUENCY display indicates center frequency of linear sweeps. When the MANUAL mode is selected, the START/CTR switch is no longer applicable because the displayed frequency corresponds to the marker position instead of the start or center frequency. An amber "MAN" light is provided to indicate the instrument is in the MANUAL mode. The "START/CTR" light indicates the instrument is in either the REPETATIVE, SINGLE, or RESET mode. (Paragraph 3-100)

(7) COARSE FREQUENCY Control: Tunes frequency of instrument over 0 Hz to 50 kHz range. Is used to set start or center frequency of linear sweeps.

(8) FINE FREQUENCY Control: Used for fine tuning of the instruments frequency. Also used to set the start frequency to 20 Hz in the LOG ZERO sweep mode.

(9) BANDWIDTH Control: Controls 3 dB bandwidth of IF Filter. Is used to select the desired frequency resolution. The six BANDWIDTH settings are: 300 Hz, 100 Hz, 30 Hz, 10 Hz, 3 Hz and 1 Hz. (Paragraph 3-80)

(10) FREQ SPAN Control: Determines width of spectrum to be observed. Span settings range from 5 Hz per division (50 Hz) to 5 kHz per division (50 kHz). (Paragraph 3-103)

(11) DISPLAY SMOOTHING Switch: Provides three levels of noise filtering for video presentation.

(12) ADJUST Indicator: Lights to indicate that sweep rate is too fast. Will go out when SWEEP TIME is increased, BANDWIDTH is widened or when FREQUENCY SPAN is narrowed. (Paragraph 3-137)

(13) SWEEP MODE Switch: Permits selection of six sweep modes: REP (Repetitive), SING (Single), RESET, MAN (Manual), LOG ZERO and LOG. (Paragraph 3-113)

(14) MANUAL VERNIER: Tunes analyzer frequency and positions horizontal trace when SWEEP MODE switch is set to MAN position. (Paragraph 3-121)

(15) SWEEP TIME Control: Sets duration of single and repetitive sweeps. Settings range from 0.01 second per division (0.1 sec.) to 200 seconds per division (2,000 sec.). (Paragraph 3-133)

(16) INPUT Connector: Accepts male, banana-plug connector; input impedance is 1 megohm, 30 pF. (Paragraph 3-13)

(17) OVERLOAD Indicator: Lights to indicate that input signal exceeds maximum input level set by INPUT SENSITIVITY and amplitude VERNIER controls. (Paragraph 3-37)

(18) Amplitude VERNIER: For absolute measurements VERNIER must be set to CAL (fully CW) position. For relative measurements, VERNIER adjusts gain of analyzer to establish a full-scale reference. As the VERNIER is rotated counterclockwise, the gain decreases and the full-scale input level increases. (Paragraph 3-36, 3-39).

(19) INPUT SENSITIVITY Switch: Selects maximum (full scale) input level and measurement range. For absolute measurements, full-scale settings range from + 30 dBV/dBm to - 70 dBV/dBM in Log 10 dB mode or from 20 V rms to 0.2 mV rms in the Linear mode. In the Linear mode, seven additional ranges (0.1 mV to 0.1 $\mu$V) can be selected by the AMPLITUDE REF LEVEL switch (Paragraph 3-39, 3-53 and 3-68). With the switch in the CAL position, the INPUT terminals are disconnected and an internally generated calibration signal is applied to the input circuits (Paragraph 3-77).

(20) CAL 10 kHz Potentiometer: Adjusts gain of amplitude circuits to compensate for slight variations in amplitude accuracy caused by temperature changes or changes in bandwidth. (Paragraph 3-199)

(21) dBV/LIN - dBm Switch: Set to dBV/LIN position for measurements in dBV or rms volts; set to dBM 600 OHM position for measurements in dBm 600 ohms. For measurements in dBm/600 ohms, an external termination is required.

**Figure 3-1. Front Panel.**

(22) AMPLITUDE REF LEVEL Switch: Operates in conjunction with INPUT SENSITIVITY switch to establish full-scale sensitivity and measurement range. In linear mode it controls the IF attenuation. When rotated in a clockwise direction, full-scale sensitivity increases in a 20 V, 10 V, 2 V, 1 V sequence (Paragraph 3-55). In the Log 10 dB mode, changing the Amplitude Ref Level setting offsets the entire display in 10 dB increments (Paragraph 3-69). In Log 1 dB mode, the Amplitude Ref Level control offsets the display to select any 10 dB portion of the 80 dB range (Paragraph 3-71).

(23) LOG 1 dB Button: (push to set; push LIN or LOG 10 dB to release) Selects Log 1 dB amplitude mode. Display sensitivity is 1 dB per division; display range is 10 dB. Any 10 dB portion of the 80 dB range can be displayed by changing the AMPLITUDE REF LEVEL setting. (Paragraph 3-71)

(24) LOG 10 dB Button: (push to set; push LIN or LOG 1 dB to release) Selects Log 10 dB amplitude mode for absolute measurements in dBV or dBm/600 ohms or relative measurements in dB. Display sensitivity is 10 dB per division; display range is 80 dB. (Paragraph 3-66)

(25) LINEAR Button: (push to set; push LOG 1 dB or LOG 10 dB to release) Selects Linear amplitude mode for absolute measurements in rms volts or relative measurements in percent of full scale. (Paragraph 3-51)

(26) POWER Switch: Applies line voltage to instrument when set to ON (AC) position; applies battery power to Option 001 instruments when set to ON (BAT) position; applies line voltage to Option 001 instruments to recharge batteries when set to CHARGE position. (Paragraph 3-192)

(27) POWER Light: Lights when POWER switch is set to ON (AC), ON (BAT) or CHARGE.

(28) STORE Button: (push to set; push to release) When initially pressed, trace currently being displayed is permanently stored in memory. When released, permanently stored trace is cleared from memory. (Paragraph 3-160)

(29) BLANK STORE Button: (push to set; push to release) When pressed, permanently stored trace is blanked from the display. When released, stored trace returns to display. (Paragraph 3-160)

(30) CLEAR WRITE Button: (momentary pushbutton) Clears display and resets sweep.

(31) FOCUS Control: Focuses CRT trace. (Paragraph 3-158)

(32) ADAPTIVE SWEEP Control: Turns Adaptive Sweep on or off; is used to set baseline threshold on CRT display. (Paragraph 3-147)

(33) INTENSITY Control: Adjusts brightness of CRT trace. Intensity can be set to any level without danger of burning the CRT face. (Paragraph 3-158)

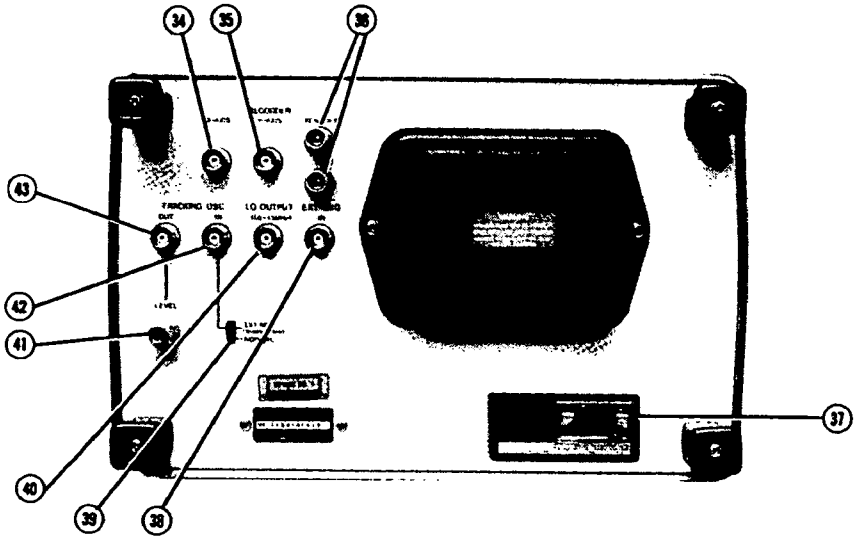


(34) X-AXIS Output: Female BNC connector supplies dc voltage corresponding to position of frequency sweep on CRT. Output voltage ranges from 0 V (left-hand edge) to + 5 V (right-hand edge). Output resistance is 1 kilohm, nominal. (Paragraph 3-165)

(35) Y-AXIS Output: Female BNC connector supplies dc voltage proportional to amplitude. Output voltage ranges from 0 V (bottom of screen) to + 5 V (top of screen). Output resistance is 1 kilohm, nominal. (Paragraph 3-168)

(36) PEN LIFT Output: A contact colsure is present across these terminals during single sweeps. If Adaptive Sweep is used, the closure is present only when the instrument is sweeping slowly over a response. (Paragraph 3-170)

(37) Power Input Module: Accepts power cord supplied with instrument. Contains line fuse and PC board for selecting line voltage. (Paragraph 3-193)

(38) EXT TRG IN Connector: Female BNC connector accepts contact closure or TTL logic levels to remotely trigger the frequency sweep. (Paragraph 3-143)

(39) EXT REF/NORMAL Switch: In the NORMAL position, the tracking oscillator receives its reference from an internal 100 kHz crystal oscillator. In the EXT REF position, the tracking oscillator reference is an external signal applied to the TRACKING OSC IN connector. With the switch in the EXT REF position, the tracking oscillator will be inoperative unless an external reference signal is applied. (Paragraph 3-176)

(40) L.O. OUTPUT: Female BNC connector supplies a 100 mV rms signal whose frequency varies from 1 MHz to 1.5 MHz as the analyzer frequency is tuned from 0 Hz to 50 kHz. Output impedance is approximately 1 kilohm. (Paragraph 3-178)

(41) LEVEL Control: Sets the amplitude of the Tracking Oscillator Output signal (0 V to 2 V rms)

(42) TRACKING OSC IN: Female BNC connector. An external reference signal can be applied to this connector to offset or frequency-modulate the Tracking Oscillator Output signal. (Paragraph 3-175)

(43) TRACKING OSC OUT: Female BNC connector supplies 0 Hz to 50 kHz signal that tracks the tuned or swept frequency of the instrument. Output level can be adjusted from 0 V to 2 V rms using the rear panel LEVEL control Output impedance is 600 ohms, nominal. (Paragraph 3-171)

**Figure 3-2. Rear Panel.**

### 3-13. Input Impedance.

3-14. The input impedance of the 3580A is 1 megohm shunted by 30 pF (28 pF nominal). This high input impedance has a minimum loading effect on the input signal and further permits the use of a 10 megohm, 10 pF Voltage Divider Probe (-hp- 10004B).

3-15. Figure 3-3 shows the equivalent circuit for the 3580A Input. The resistor, $R_{in}$, represents the 1 megohm input resistance and the capacitor, $C_s$, represents the 28 pF shunt capacitance. Figure 3-4 shows the input impedance, $Z_t$, as a function of frequency. At low frequencies the reactance of $C_s$ is very high, making $Z_t$, nearly equal to $R_{in}$. As frequency increases, the decreasing reactance of $C_s$ becomes more and more significant, causing $Z_t$ to decrease. At 50 kHz, $Z_t$ is approximately 100 kilohms.

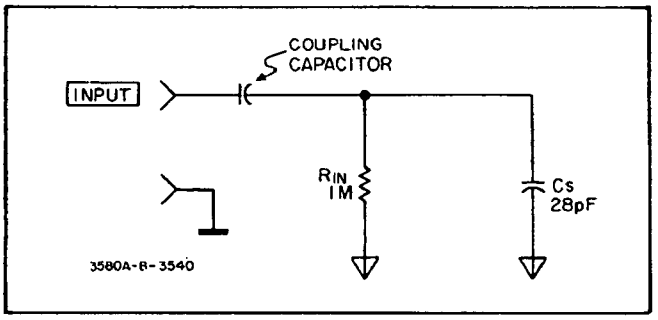


**Figure 3-3. Equivalent Input Circuit.**

### 3-16. Input Constraints.

3-17. The maximum ac voltage that can be safely applied to the 3580A INPUT is determined by the INPUT SENSITIVITY switch setting (Paragraph 3-39). Maximum input levels are listed in Table 3-2. The 3580A input circuits are well protected and can withstand momentary (< 5 second) overloads up to 100 V rms on all input ranges. The instrument can withstand continuous overloads up to 100 V rms on the + 30 dB through -10 dB ranges and overloads up to 50 V rms on the -20 dB through -70 dB ranges. Overloads greater than this may damage the instrument.

CAUTION

*3580A STD Input Levels exceeding 100V rms on the + 30 dB through -10 dB ranges, 50 V rms on the -20 dB through -70 dB ranges or ± 100 V dc may damage the instrument. See Paragraph 3-187 for Option 002.*

**3-18. DC Isolation.** The STD 3580A INPUT is capacitively coupled to provide dc isolation. The maximum dc voltage that can be safely applied to the INPUT is ± 100 V dc. Exceeding this limit can cause breakdown of the input capacitor resulting in damage to the input amplifier circuitry.

3-19. The 3580A cannot be operated in a floating condition. All input and output commons are connected directly to outer-chassis (frame) ground which connects to earth ground through the offset pin of the power cord connector or the common side of the INPUT connector. The 3580A Option 992, when operated in the unbalanced mode, has the same input restrictions as the 3580A standard. However, when the 3580A Option 002 is used in the bridged mode or the terminated mode, there is no input connection to chassis ground.

### 3-20. Grounding.

3-21. To protect operating personnel, *the 3580A chassis must be grounded.* The 3580A is equipped with a three conductor power cable which, when plugged into an appropriate receptacle, grounds the instrument. The offset pin on the power plug is the ground connection.

3-22. To preserve the protection feature when operating the instrument from a two contact outlet, use a three-prong to two-prong adapter and connect the lead on the adapter to earth ground.

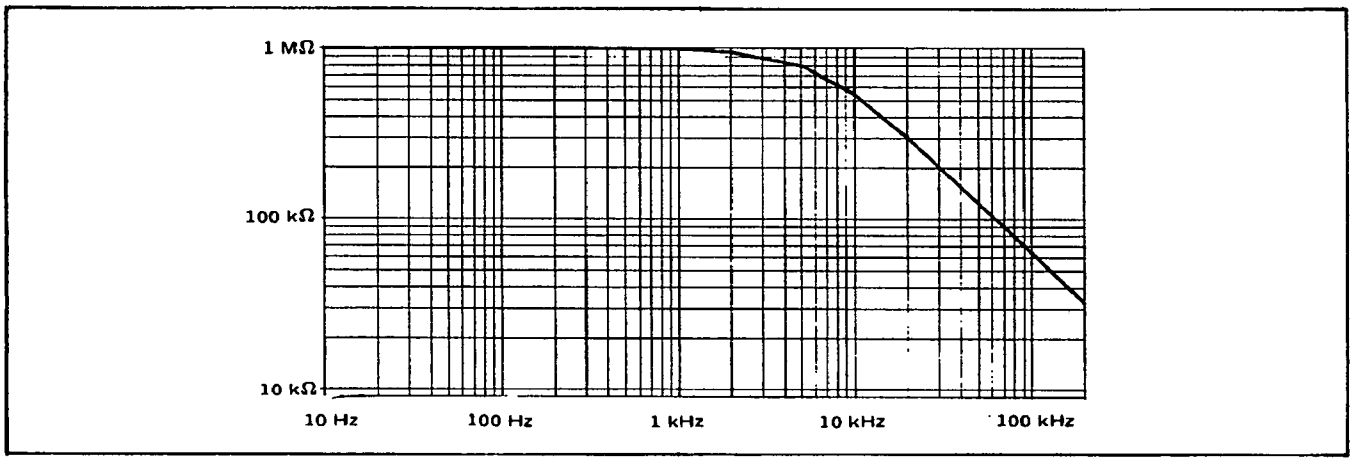


**Figure 3-4. Graph $Z_t$ vs. Frequency.**

3-23. For battery powered instruments (Option 001), the common binding post of the INPUT connector (Case Ground ⏚) should be connected to earth ground or to an appropriate system ground. If *a system ground is used, extra care should be taken to ensure that it is actually at ground potential and is not a voltage source.*

### 3-24. Ground Loops.

3-25. In the design of the 3580A, extra care has been taken to control internal ground currents that could produce undesirable responses or degrade the accuracy of low level measurements. Due to its wide dynamic range and high sensitivity, however, the 3580A can be affected by external ground currents or "ground loops" which are normally caused by poor grounding. The following paragraphs briefly describe the common power-line ground loop and outline the steps that can be taken to minimize ground loop problems.

3-26. Figure 3-5A shows the input arrangement for a simple grounded measurement. $E_{in}$ represents the source being measured along with any noise associated with it and is generally called the "normal-mode source". $R_s$ represents the source resistance and the resistance of the high lead; $R_g$ represents the resistance of the ground lead. Current from $E_{in}$ (normal-mode current) flows through $R_s$, $Z_I$ and $R_g$ and the instrument responds to the drop across $Z_I$. As long as the grounds on both sides of $R_g$ are identical, extraneous currents cannot circulate between the source ground and the instrument ground. If, however, the grounds are different due to voltage drops in the ground lead or currents induced into it, a new source is developed and the measurement appears as shown in Figure 3-5B. The new source $E_{cm}$ (the difference between grounds), is called the "common-mode source" because it is common to both the high and ground lines. (Common-mode current can flow through $R_g$ or through $R_s$ and $Z_I$. Since $Z_I$ is usually much larger than $R_s$ and since they are both in parallel with $R_g$, most of the voltage across $R_g$ will appear across $Z_I$ causing an error in the amplitude reading.

3-27. To minimize power-line ground loops, the following guidelines should be observed:

a. Keep input leads as short as possible.

b. Provide good ground connections to minimize $R_g$.

c. Connect the signal source and the 3580A to the same power bus.

d. If a removable ground strap is provided on the signal source, float the source to break the common-mode current path.

e. Option 001: Battery operate the 3580A; connect a separate ground lead between the common terminal of the 3580A INPUT connector and the ground terminal of the signal source.

### 3-28. Measurement Configurations.

3-29. The 3580A can be used in either of two measurement configurations: open loop or closed loop. These configurations are illustrated in Figure 3-6.

**3-30. Open Loop.** In the open-loop configuration, the 3580A functions as a *signal analyzer* which divides the input signal into its various frequency components. The amplitudes of these components are displayed as a function of frequency on the CRT. The amplitude vs. frequency display shows how energy is distributed as a function of frequency and, in effect, is the Fourier spectrum of the input signal. Some of the more common

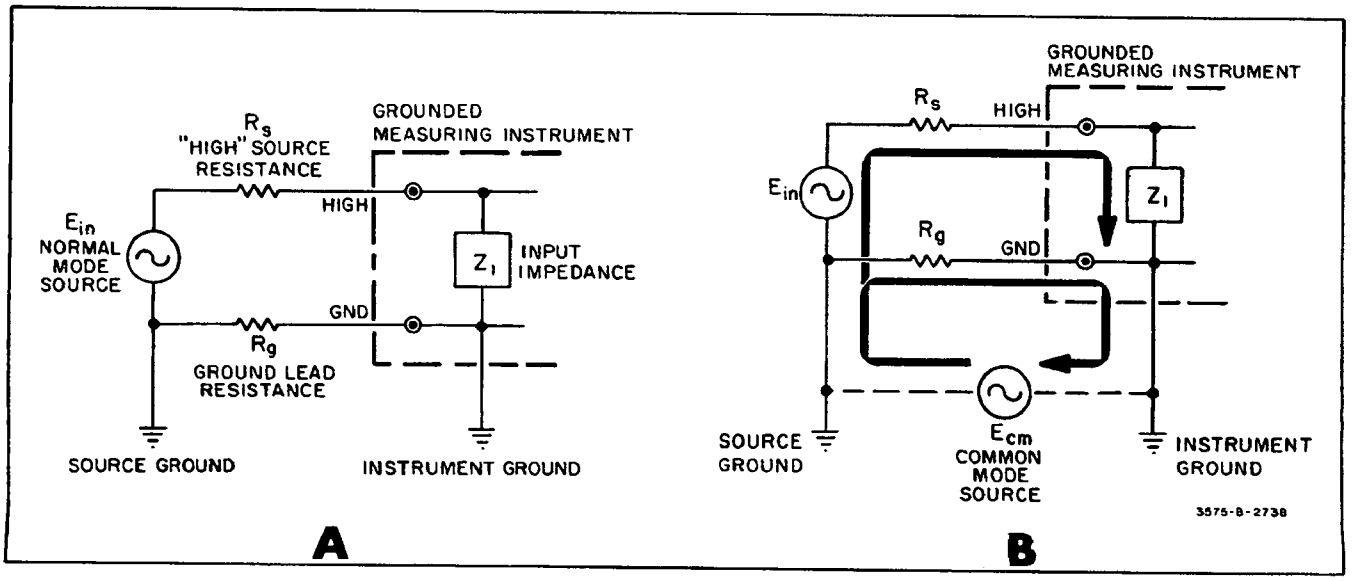


**Figure 3-5. Power Line Ground Loop.**

measurements that can be made using the open-loop configuration include harmonic distortion, intermodulation distortion, spurious, square-wave symmetry and noise.

**3-31. Closed Loop.** In the closed-loop configuration, the 3580A functions as a network analyzer for characterizing two-port devices such as amplifiers, attenuators and filters. For closed-loop measurements the network to be tested is inserted between the rear panel TRACKING OSC OUT and the front panel INPUT. The tracking oscillator supplies the stimulus to the network and the 3580A measures the response. As the frequency is swept over the band of interest, the instrument responds to the amplitude variations introduced by the network. The resulting display is an amplitude vs. frequency plot of the network.

### 3-32. Amplitude Modes.

3-33. The front panel AMPLITUDE MODE switch permits selection of three amplitude modes: Linear (LIN), Log 10 dB and Log 1 dB. When the Linear mode is selected and the amplitude VERNIER is in the CAL position, the vertical axis of the display is calibrated in rms volts (average responding). The bottom line of the display graticule represents 0 volts while the top line represents the full scale input voltage determined by the INPUT SENSITIVITY and AMPLITUDE REF LEVEL control settings (Paragraph 3-53). When either of the Log modes is selected, the verical axis of the display is calibrated in dBV (1 V rms = 0 dBV) or dBm/600 ohms, depending on the position of the dBV/LIN-dBm slide switch. In the Log 10 dB mode, the vertical scale is 10 dB per division and the maximum display range is greater than 80 dB (Paragraph 3-67). In the Log 1 dB mode, the vertical scale is expanded to 1 dB per division with a maximum display range of 10 dB. Any 10 dB portion of the 80 dB display range can be displayed by changing the AMPLITUDE REF LEVEL setting (Paragraph 3-71).

### 3-34. Absolute/Relative Measurements.

**3-35. Absolute Measurements.** Absolute measurements reveal the actual amplitude of responses appearing on the CRT display. The 3580A can be calibrated for absolute measurements in rms volts, dBV (1 V rms = 0 dBV) or dBm/600 ohms. For absolute measurements with the 3580A, the front panel amplitude VERNIER control must be set to the CAL (full clockwise) position and the instrument must be calibrated as outlined in Paragraph 3-199.

**3-36. Relative Measurements.** In signal analysis, relative measurements are used for comparing the amplitudes of two or more frequency components of a signal. In network analysis, relative measurements are used to compare the amplitude variations of a response curve at two or more frequencies. Relative measurements do not require a calibrated scale. That is, using the amplitude VERNIER and other amplitude controls, the gain of the analyzer can be adjusted so that any input level within the range of 100 V rms to 0.1 $\mu$V rms will produce full scale deflection on the CRT display. This arbitrary full scale input level then serves as a reference for measuring signals that are lower in amplitude. In the Linear mode with the VERNIER not in the CAL position, the vertical scale on the CRT is no longer calibrated in volts per division. Thus, the unit of measure becomes "percent of full scale" where the reference is 100% and one vertical division is 10%. In the Log modes the vertical scale is always 10 dB per division or 1 dB per division even though the full scale reference is arbitrary. For relative measurements in the Log 10 dB mode, the top line of the display graticule (full scale) represents 0 dB and signals are measured in dB below the 0 dB reference level.

### 3-37. Overload Indicator.

3-38. Figure 3-7. is a simplified block diagram showing the 3580A Input Section. The INPUT SENSITIVITY

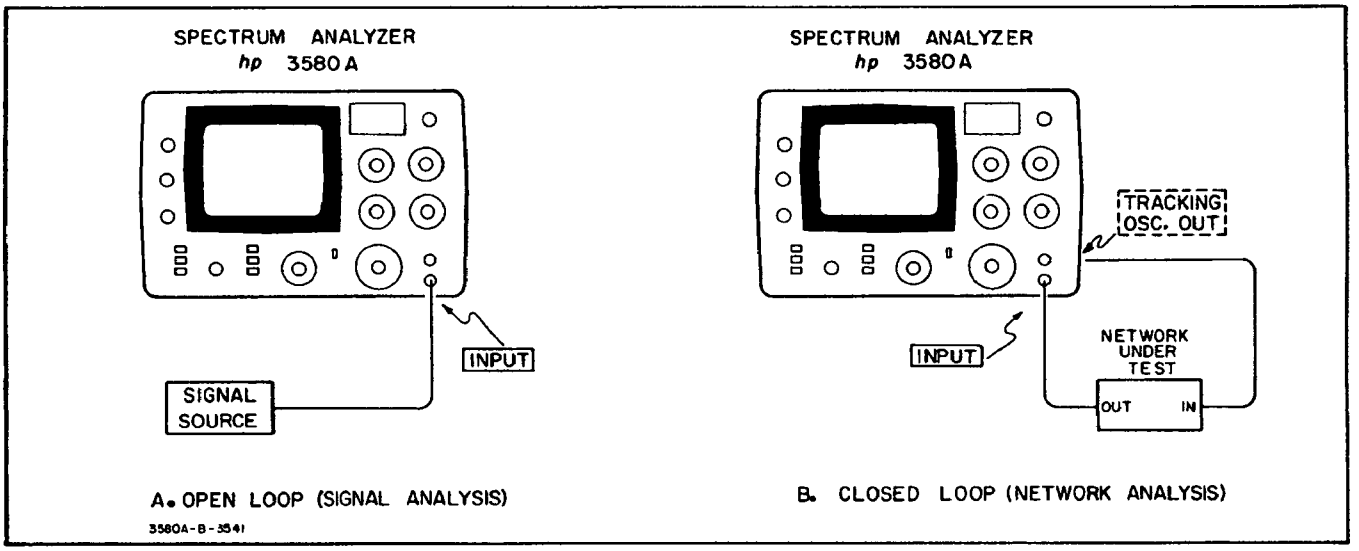


**Figure 3-6. Measurement Configurations.**

switch and its associated VERNIER potentiometer control the input attenuation and gain of the Input Circuits to maintain the proper signal level at the input of the Mixer. This is an important function since signals that overdrive the Mixer can produce harmonic and spurious mixing products which ultimately appear on the display. The Overload Detector at the input of the Mixer senses when the signal level exceeds the design limits and, in turn, lights the front panel OVERLOAD indicator. As indicated in Paragraph 3-17, the 3580A Input Circuits are well protected and continuous overloads up to 100 V rms on the + 30 dB through -10 dB ranges or up to 50 V rms on the -20 dB through -70 dB ranges will not damage the instrument. In most cases, an OVERLOAD indication simply means that the input signal is overdriving the Mixer and unwanted responses may appear on the display. Generally, any time the OVERLOAD light is off, instrument-inducted distortion and spurious is more than 80 dB below the input reference level.

### 3-39. Maximum Input Level.

3-40. The *maximum input level* is the maximum level that can be applied to the INPUT without overloading the instrument. The maximum input level is determined only by the INPUT SENSITIVITY and amplitude VERNIER settings and is *not* affected by the AMPLITUDE REF LEVEL setting. With the amplitude VERNIER control in the CAL (fully CW) position, the maximum input level is indicated by a black panel index adjoining the INPUT SENSITIVITY switch dial and the OVERLOAD indicator (Figure 3-8). In both Linear and Log modes, the maximum input level is determined by the black (dB) markings on the INPUT SENSITIVITY switch dial. These markings represent either dBV or dBm/600 ohms, depending on the position of the dBv/LIN-dBm slide switch. When the amplitude VERNIER control is rotated counterclockwise away from the CAL position, the gain of the input circuit decreases, the maximum input level *increases* and the markings on the INPUT SENSITIVITY switch dial no longer apply. Table 3-2 lists the maximum input levels for each INPUT SENSITIVITY setting with the amplitude VERNIER in the CAL and fully counterclockwise positions. The maximum levels listed in the table are, in some cases, considerably lower than the absolute maximum levels that will produce an OVERLOAD indication. Observing these maximum levels will ensure optimum performance on all ranges.

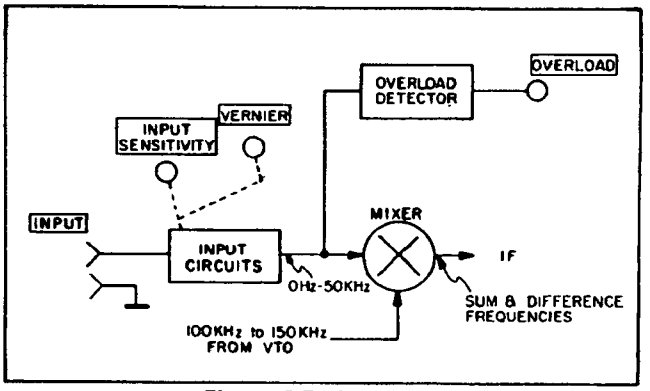


**Figure 3-7. Input Section.**

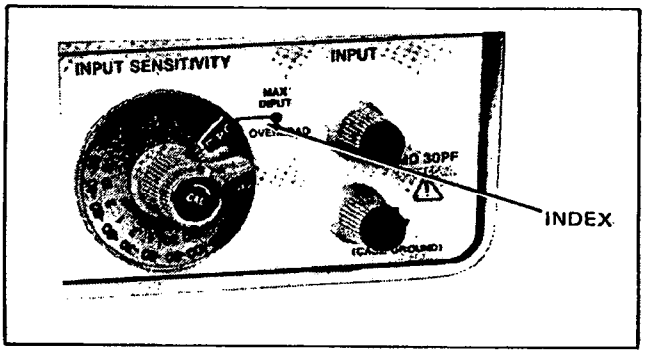


**Figure 3-8. Maximum Input Index.**

### 3-41. Sensitivity.

3-42. Sensitivity is a figure of merit that defines the analyzer's ability to detect or respond to a given input level. There are three types of sensitivity that are of interest when operating the 3580A:

**Table 3-2. Maximum Input Levels.**

| Input Sensitivity Setting | (VERNIER in CAL) Linear Mode | (VERNIER in CAL) Log Mode | (VERNIER fully CCW) Linear Mode | (VERNIER fully CCW) Log Mode | Potential Damage Level (Continuous Overload) |
|---|---|---|---|---|---|
| + 30 dB/20 V | 31.6 V | + 30 dBV/dBm | 100 V* | + 40 dBV/dBm | 100 V* |
| + 20 dB/10 V | 10 V | + 20 dBV/dBm | 20 V | + 30 dBV/dBm | |
| + 10 dB/2 V | 3.16 V | + 10 dBV/dBm | 10 V | + 20 dBV/dBm | |
| 0 dB/1 V | 1 V | 0 dBV/dBm | 2 V | + 10 dBV/dBm | |
| -10 dB/0.2 V | 0.32 V | -10 dBV/dBm | 1 V | 0 dBV/dBm | 100 V* |
| -20 dB/0.1 V | 0.1 V | -20 dBV/dBm | 0.2 V | -10 dBV/dBm | 50 V |
| -30 dB/20 mV | 32 mV | -30 dBV/dBm | 0.1 V | -20 dBV/dBm | |
| -40 dB/10 mV | 10 mV | -40 dBV/dBm | 20 mV | -30 dBV/dBm | |
| -50 dB/2 mV | 3.2 mV | -50 dBV/dBm | 10 mV | -40 dBV/dBm | |
| -60 dB/1 mV | 1 mV | -60 dBV/dBm | 2 mV | -50 dBV/dBm | |
| -70 dB/0.2 mV | 0.32 mV | -70 dBV/dBm | 1 mV | -60 dBV/dBm | 50 V |

*Absolute maximum input voltage.

a. Maximum Sensitivity.

b. Full Scale Sensitivity.

c. Display Sensitivity.

**3-43. Maximum Sensitivity.** Maximum Sensitivity refers to the smallest signal that can be detected by the analyzer. The maximum sensitivity of the analyzer is limited by its own internally generated noise and is commonly defined as the point where the signal level is equal to the noise level. This is sometimes called "tangential sensitivity".

3-44. Nyquist's Noise Equation[1] reveals two important things about noise that apply to the 3580A:

a. *Noise is proportional to the square root of bandwidth.* . . Noise level decreases and sensitivity increases as the BANDWIDTH setting is narrowed.

b. *Noise is proportional to the square root of input resistance.* . . The 3580A has a high (1 Megohm) input resistance. This means that noise is largely dependent on the source resistance placed at the INPUT terminals. Signal sources having low output resistances will produce a lower noise level than those having high output resistances.

3-45. Noise level is also dependent on the tuned frequency of the instrument. Semiconductors in the input stages of the instrument exhibit surface noise which has a 1/f frequency spectrum. This surface noise is predominate at frequencies below 1 kHz. When the 3580A is tuned below 1 kHz, the noise level increases and sensitivity decreases.

3-46. Figure 3-9 is a family of curves showing the specified noise levels vs. frequency for the 300 Hz, 30 Hz and 1 Hz BANDWIDTH settings. Typically, if the source resistance is less than 10 kilohms, the noise levels will be below those indicated by the curves.

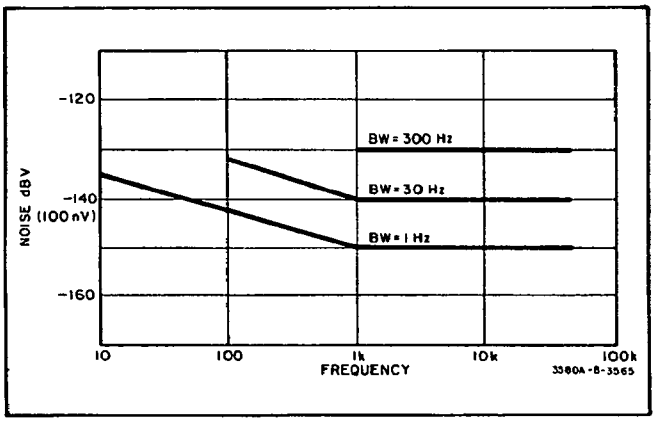


**Figure 3-9. Noise vs. Frequency.**

**3-47. Full Scale Sensitivity.** Full scale sensitivity defines the input level that will produce full scale deflection on any given range. For absolute measurements, full scale sensitivity ranges from 20 V rms to 0.1 $\mu$V rms in the Linear mode and from +30 dBV/dBm to -140 dBV/dBm in the Log (10 dB) mode. With the amplitude VERNIER control set fully counterclockwise, full scale sensitivity ranges from approximately 100 V rms to 0.2 $\mu$V rms in the Linear mode and from +40 dBV/dBm to -130 dBV/dBm in the Log mode.

**3-48. Display Sensitivity.** Display Sensitivity or "scale calibration" expresses the analyzer's response in units per vertical division. For absolute measurements in the Linear mode, display sensitivity ranges from 2 V per division to 10 nV per division. For absolute or relative logarithmic measurements, display sensitivity is 10 dB per division in the Log 10 dB mode and 1 dB per division in the Log 1 dB mode.

### 3-49. Dynamic Range.

3-50. The dynamic range of a spectrum analyzer defines its ability to detect large and small signals and display them simultaneously. For operating purposes, dynamic range can be expressed as the ratio of the largest to smallest signals that can be simultaneously displayed on the CRT. In both the Linear and Log modes, the largest signal that can be displayed (full scale sensitivity) is determined by the INPUT SENSITIVITY, amplitude VERNIER and AMPLITUDE REF LEVEL control settings. The smallest signal that can be displayed is determined by the display range or by the internal noise floor (Maximum sensitivity). In the Linear mode the smallest signal that can be displayed is approximately 1% of full scale. Thus, the dynamic range is approximately 40 dB as long as the internal noise floor is more than 40 dB below full scale. With the AMPLITUDE REF LEVEL switch in the NORMAL position, the display range is the Log 10 dB mode is greater than 80 dB. The dynamic range is, therefore, at least 80 dB as long as the noise floor is more than 80 dB below full scale. In the Log 1 dB mode, the display sensitivity is increased to 1 dB per division and the dynamic range, determined by the display range, is 10 dB.

### 3-51. Amplitude Measurements (Linear Mode).

3-52. Figure 3-10 is a simplified block diagram showing a portion of the 3580A amplitude section in the Linear mode. The INPUT SENSITIVITY switch and amplitude VERNIER potentiometer control the input attenuation and gain of the Input Circuits and establish the maximum input level as outlined in Paragraph 3-40. In addition, the INPUT SENSITIVITY switch operates in conjunction with the AMPLITUDE REF LEVEL switch to establish the full-scale sensitivity and measurement range.

[1] $E_n = (4\ kTBR)^{1/2}$
Where $E_n$ = noise level; k = Boltzmann's constant; T = temperature (°K); B = bandwidth (Hz); R = input resistance.

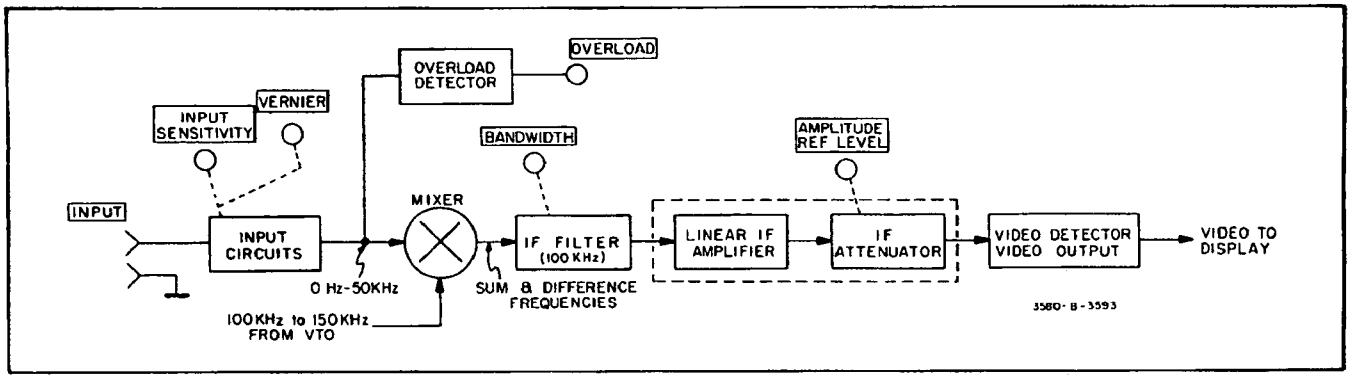


**Figure 3-10. Amplitude Section (Linear Mode).**

3-53. The INPUT SENSITIVITY switch has 12 positions: a CAL position and 11 voltage range settings. With the amplitude VERNIER in the CAL position and the AMPLITUDE REF LEVEL switch in the NORMAL (X1) position, the full-scale sensitivity, as determined by INPUT SENSITIVITY switch setting, ranges from 20 V rms to 0.2 mV rms.

3-54. For any given INPUT SENSITIVITY setting, the dynamic range of the Input Circuits, Mixer and IF Filter is at least 80 dB as long as the noise floor is more than 80 dB below full scale. Thus, with the INPUT SENSITIVITY switch in the 0.2 mV position, an input signal as low as 0.1 $\mu$V rms could be detected at the output of the IF Filter. In the Linear mode, however, the dynamic range of the display is limited to approximately 40 dB. This means that on the 0.2 mV range the smallest signal that can be displayed is approximately 2$\mu$V or 1% of full scale. Moreover, the 2 $\mu$V signal might be visible on the display but it would be too small to be measured accurately. For all practical purposes, then, the dynamic display range is limited to approximately 20 dB.

3-55. To utilize the full measurement range of the instrument in the Linear mode, it is necessary to increase the display sensitivity. To accomplish this a variable IF Attenuator, controlled by the AMPLITUDE REF LEVEL switch, is inserted between the Linear IF Amplitude and Video Detector. With the AMPLITUDE REF LEVEL switch set to the NORMAL (X1) position, the IF attenuation is *maximum*. As the AMPLITUDE REF LEVEL switch is rotated in a clockwise direction, the IF attenuation decreases, the effective IF gain increases and the display sensitivity increases. The IF Attenuator provides seven additional ranges which allow the full-scale sensitivity to be varied from 0.1 mV rms to 0.1 $\mu$V rms.

3-56. By observing the INPUT SENSITIVITY and AMPLITUDE REF LEVEL controls, it can be noted that the full-scale (blue) markings on the INPUT SENSITIVITY switch dial are indicated by a white window that is mechanically linked to the AMPLITUDE REF LEVEL switch. Changing the position of either switch changes the full-scale sensitivity in a 20 V, 10 V 2 V, 1 V sequence. Changing the AMPLITUDE REF LEVEL setting, however, does not change the maximum input level. For example, with the INPUT SENSITIVITY switch set for a maximum input of 1 V rms and the AMPLITUDE REF LEVEL switch set to the X0.1 position, the full-scale sensitivity is 0.1 V rms, the display sensitivity is 10 mV per division but the maximum input level is still 1 V rms. Input signals greater than 0.1 V rms but less than or equal to 1 V rms will not overdrive the mixer or produce an OVERLOAD indication. They will, however, peak the display when the analyzer is tuned to their specific frequency. This does not damage the instrument nor hinder its ability to measure signals within the display range.

**3-57. Using the AMPLITUDE REF LEVEL Control.** Whenever possible, the AMPLITUDE REF LEVEL switch should be left in the NORMAL (X1) position and the INPUT SENSITIVITY switch should be used to set the full-scale sensitivity. This is because the Amplitude Calibration Procedure (Paragraph 3-199) is performed with the AMPLITUDE REF LEVEL switch in the NORMAL position and any error introduced by the IF Attenuator is adjusted out. When the AMPLITUDE REF LEVEL setting is changed from the NORMAL position, the accuracy of the IF Attenuator must be considered. This means that a possible worst-case error ± 3% of full scale must be *added* to the amplitude accuracy specification. Amplitude accuracy is discussed in Paragraph 3-72.

3-58. There are commonly two occasions when it is necessary to change the AMPLITUDE REF LEVEL setting:

a. When the required full-scale is within the range of 0.1 mV rms to 0.1 $\mu$V rms and the amplitude of the input signal is less than or equal to 0.1 mV rms. In this case, the INPUT SENSITIVITY switch is set to the 0.2 mV range (fuilly clockwise) and the appropriate range is selected using the AMPLITUDE REF LEVEL switch.

b. For expanded-scale measurements where the amplitude of the input signal is 0.2 mV rms or greater and the signal or signals of interest are less than 10% of

full scale with the INPUT SENSITIVITY switch set to the lowest range that does not produce an OVERLOAD indication. In this case, the AMPLITUDE REF LEVEL switch is initially set to the X1 position and the INPUT SENSITIVITY switch is set to the lowest range that does not produce an OVERLOAD indication. The AMPLITUDE REF LEVEL switch is then set so that the low-level signals of interest can be measured. Signals greater than the full-scale level indicated by the white window on the INPUT SENSITIVITY switch dial will peak the display but will not damage the instrument nor introduce harmonic or spurious responses.

**3-59. Scale Factor.** The blue markings on the AMPLITUDE REF LEVEL switch dial indicate the scale factor which, for *absolute* measurements is the factor by which the INPUT SENSITIVITY (Max. Input) setting must be multiplied to determine the full-scale sensitivity. For example, if the INPUT SENSITIVITY switch is set to the 2 V range and the AMPLITUDE REF LEVEL switch is set to the X0.01 position, the full-scale sensitivity is: 2 V X0.01 = 0.02 V or 20 mV.

3-60. For absolute measurements the full-scale sensitivity is conveniently indicated by the white window on the INPUT SENSITIVITY switch dial and the scale factor can generally be ignored. If, for some reason, the scale factor is to be used, note that the even numbered positions on the AMPLITUDE REF LEVEL dial are not marked. This is because the scale factor in these positions depends on the INPUT SENSITIVITY switch setting. If the INPUT SENSITIVITY switch is set to the 20 V, 2 V, 0.2 V, etc. position, the unmarked positions on the AMPLITUDE REF LEVEL switch dial represent X0.5, X0.05, X0.005 and X0.0005. If the INPUT SENSITIVITY switch is set to 10 V, 1 V, 0.1 V, etc., the unmarked positions represent X0.2, X0.02, X0.002 and X0.0002. This applies *only* when the amplitude VERNIER is in the CAL position.

3-61. For relative measurements where the amplitude VERNIER is not in the CAL position, the full-scale markings on the INPUT SENSITIVITY switch dial do not apply and, for expanded-scale measurements, a scale factor must be used. In relative measurements the scale factor is the factor by which a relative amplitude reading must be multiplied to obtain the correct reading in percent of full scale.

3-62. When making relative measurements it is important to remember that any time the VERNIER is not in the CAL position, the relationship between the marked and unmarked positions of the AMPLITUDE REF LEVEL Switch varies as a function of both the INPUT SENSITIVITY and amplitude VERNIER settings. There is always a X1, X0.1, X0.01, X0.001 relationship between the marked positions and this same relationship exists between the unmarked positions. However, there is no longer a X1, X0.5, X0.1 or X1, X0.2, X0.1 relationship between the marked and unmarked positions. To obtain the correct scale factor the following guidelines must be observed:

a. If the full-scale reference is set with the AMPLITUDE REF LEVEL switch in a marked position, all measurements must be made using marked positions.

b. If the full-scale reference is set with the AMPLITUDE REF LEVEL switch in an unmarked position, all measurements must be using unmarked postions.

c. The AMPLITUDE REF LEVEL setting on which the full-scale reference level is established becomes the X1 setting. If the X1 setting is a marked position, the scale factors for the remaining marking positions become X0.1, X0.01, etc. Similarly, if the X1 setting is an unmarked position the remaining unmarked positions become X0.1, X0.01, etc.

**3-63. Examples.** Consider the case where the fundamental frequency component of an input signal is 0.75 V and it is necessary to measure the second harmonic component whose relative amplitude is 1%. With the AMPLITUDE REF LEVEL control initially set to the NORMAL (X1) position and the amplitude VERNIER fully counterclockwise, the INPUT SENSITIVITY switch can be set to the 0.2 V position without overloading the instrument. The amplitude VERNIER can then be adjusted so that the amplitude of the fundamental frequency component is 100% of full scale. The % second harmonic will perhaps be visible on the display but an expanded scale will be required to measure it accurately. In this case, the full-scale reference was established with the AMPLITUDE REF LEVEL switch in the X1 position. Thus, the unmarked positions cannot be used and the scale factors of the marked positions are as indicated on the switch dial. By setting the AMPLITUDE REF LEVEL control to the X0.01 position, the 1% second harmonic can be expanded to 100% of full scale. It will be necessary to multiply the 100% reading by the X0.01 scale factor to obtain the correct reading: 100 x 0.01 = 1%.

3-64. Next, consider the case where the amplitude of the fundamental frequency component is 1.8 mV and it is necessary to measure a harmonic component whose relative amplitude is 4%. With the AMPLITUDE REF LEVEL switch in the NORMAL (X1) position and the amplitude VERNIER fully counterclockwise, the INPUT SENSITIVITY switch can be set to the 0.2 mV (lowest) range. With a fundamental frequency component of less than 0.2 mV, a full-scale reference cannot be obtained on the 0.2 mV range. It is, therefore, necessary to go to the 0.1 mV range using the AMPLITUDE REF LEVEL switch. In this case, the full-scale reference will be established with the AMPLITUDE REF LEVEL switch in an unmarked position. This unmarked position becomes the X1 position. To expand the harmonic to a measureable level, it will be necessary to rotate the

AMPLITUDE REF LEVEL control clockwise to the next unmarked position. This unmarked position has a scale factor of X0.1 and will expand the 4% harmonic to 40% of full scale. The correct reading can then be obtained by multiplying the 40% reading by the X0.1 scale factor: 40 X0.1 = 4%.

**3-65. Alternative Method.** An alternative method for determining the relative amplitude of two signals is to first measure the absolute voltage levels and then calculate their relative amplitude using the following formula:

$$A = \frac{V2}{V1} X100$$

Where: A = relative amplitude in percent
V1 = reference level in rms volts
V2 = signal level in rms volts

**3-66. Amplitude Measurements (Log Mode).**

3-67. Figure 3-11 is a simplitied block diagram showing a portion of the 3580A amplitude section in the Log mode. By comparing Figures 3-10 and 3-11, it can be noted that in the Log mode, the IF Amplifier/Attenuator is replaced by a Log Amplifier. The Log Amplifier provides an 80 dB display range.

3-68. With a dynamic display range of 80 dB, only eleven full-scale ranges are needed to utilize the full measurement range of the instrument. These eleven ranges are selected by the INPUT SENSITIVITY switch. With the amplitude VERNIER in the CAL position and the AMPLITUDE REF LEVEL control in the NORMAL (0 dB) position, the full-scale sensitivity, as determined by the INPUT SENSITIVITY switch setting, ranges from + 30 dBV/dBm to -70 dB/dBm.

3-69. As in the Linear mode, the maximum input level is determined by the INPUT SENSITIVITY and amplitude VERNIER settings. Likewise, the full-scale sensitivity is indicated on the INPUT SENSITIVITY switch dial by the white window that is linked to the AMPLITUDE REF LEVEL switch. In the Log mode, however, the AMPLITUDE REF LEVEL switch controls the dc operating point of the Video Output circuits and cannot be used to extend the measurement range. In th Log 10 dB mode, rotating the AMPLITUDE REF LEVEL switch in a clockwise direction offsets the entire display in 10 dB increments. Each time the display is offset the value of the top line of the display graticule (full scale) becomes 10 dB lower as indicated by the white window. At the same time, however, the dynamic range of the display decreases by 10 dB. With the AMPLITUDE REF LEVEL switch set to the -70 dB position, the full-scale sensitivity is 70 dB below its original value but the dynamic display range is only about 10 dB.

3-70. The ability to offset the display in the Log 10 dB mode is useful for some measurement applications. In most cases, however, all measurements can be made with the AMPLITUDE REF LEVEL switch set to the NORMAL position. Any time the AMPLITUDE REF LEVEL setting is changed from the NORMAL position, the dynamic display range decreases and a possible worst-case error ± 1 dB must be added to the overall amplitude accuracy specification.

**3-71. Expanded-Scale Measurements.** When the Log 1 dB mode is selected, the display sensitivity is increased to 1 dB per division and, with 10 vertical divisions, the maximum display range is 10 dB. The display in the Log 1 dB mode corresponds to the top 10 dB of the display in the Log 10 dB mode. Thus, by offsetting the display using the AMPLITUDE REF LEVEL control, any 10 dB portion of the 80 dB range can be displayed. In the Log 1 dB mode, the black (dB) markings on the AMPLITUDE REF LEVEL switch dial indicate the value of the top line of the display graticule with respect to the 0 dB (full scale) reference. For example, with the switch in the -10 dB position the top line of display graticule represents -10 dB and the display ranges from -10 dB to -20 dB. Similarly, with the switch in the -60 dB position the top line of the display graticule represents -60 dB and the display ranges from -60 dB to -70 dB.

**3-72. Amplitude Accuracy.**

3-73. The Amplitude Accuracy Specification listed in Table 1-1 is as follows:

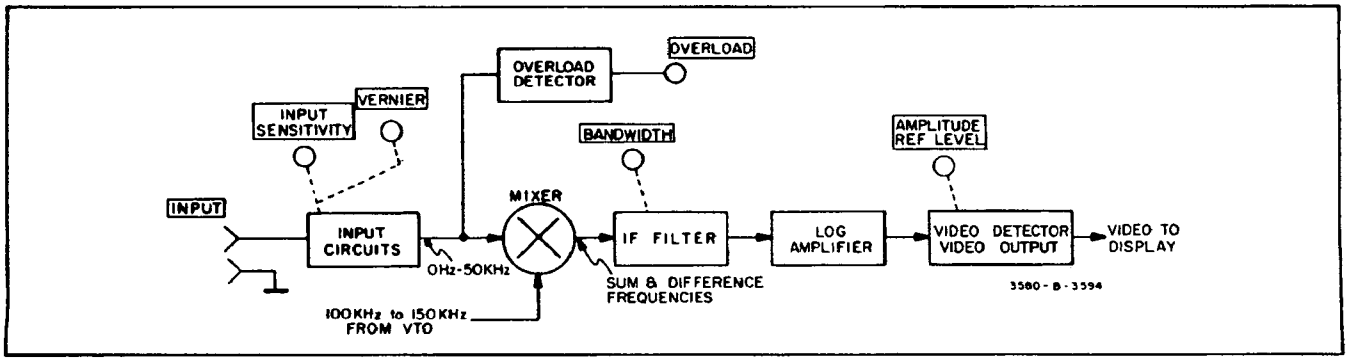


**Figure 3-11. Amplitude Section (Log Mode).**

| Amplitude: | Log | Linear |
|---|---|---|
| Frequency Response: | | |
| 20 Hz—20 kHz | ± .3 dB | ± 3% |
| 5 Hz—50 kHz | ± .5 dB | ± 5% |
| Switching between bandwidths (25° C): | | |
| 3 Hz—300 Hz | ± .5 dB | ± 5% |
| 1 Hz—300 Hz | ± 1 dB | ± 10% |
| Amplitude Display: | ± 2 dB | ± 2% |
| Input Attenuator: | ± .3 dB | ± 3% |
| Amplitude Reference Level: (IF Attenuator) | | |
| most sensitive range | ± 1 dB | ± 10% |
| all other ranges | ± 1 dB | ± 3% |

3-74. The Amplitude Accuracy Specification is broken down so that portions of the specification that do not apply to a particular measurement can be eliminated. All applicable portions of the specification must be added together to obtain the overall accuracy specification. It should be noted that the overall accuracy specification reflects the absolute *worst-case* error that could possibly be encountered. Typically, all parameters are well within their specified tolerances and the probability of having a worst-case condition is very slight. As more parameters are added to the specification, the magnitude of the possible worst-case error increases but the probability of having a worst-case condition greatly decreases.

3-75. The Frequency Response, Amplitude Display and Input Attenuator Specifications must always be taken into account when calculating the overall accuracy specification. Excluding the Switching Between Bandwidths and Amplitude Ref Level specifications, the worst case error is ± 2.8 dB in the Log mode or ± 10% of reading in the Linear mode.

3-76. The Switching Between Bandwidths specification can be disregarded as long as the Amplitude Calibration Procedure is performed on the BANDWIDTH setting that is used for measurements. If the BANDWIDTH setting is changed, the Switching Between Bandwidths specification must be added to the overall accuracy specification. Similarly, the Amplitude Ref Level specification can be disregarded as long as the AMPLITUDE REF LEVEL control is in the NORMAL position. If the AMPLITUDE REF LEVEL setting is changed, the Amplitude Ref Level specification must also be added to the overall accuracy specification.

### 3-77. Internal Cal Signal.

3-78. With the INPUT SENSITIVITY switch set to the CAL position, the high INPUT terminal on the front panel is disconnected and an internally generated calibration signal is applied to the Input Amplifier. The calibration signal is a highly accurate 15/85 duty cycle pulse train which provides a 10 kHz fundamental frequency component along with odd and even harmonic components spaced at 10 kHz intervals (Figure 3-12). The magnitude of the pulse is such that the fundamental frequency component produces full scale deflection when the instrument is properly calibrated. The amplitudes of the harmonic components are not meaningful. The calibration signal can be used for amplitude calibration or to verify the frequency accuracy of the instrument.

3-79. In the Amplitude Calibration Procedure (Paragraph 3-199), the front panel 10 kHz CAL potentiometer is adjusted so that the 10 kHz fundamental frequency component of the cal signal produces full scale deflection. This calibrates all circuitry following the input attenuator to a full scale accuracy of ± 1.5% at 10 kHz.

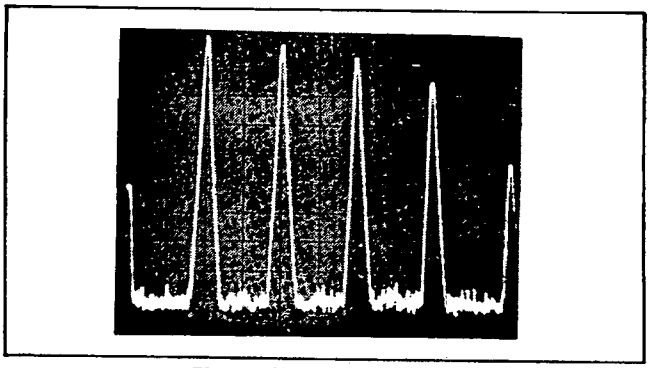

**Figure 3-12. Cal Signal.**

### 3-80. Bandwidth Setting.

3-81. Refer to Figure 3-13 for the following discussion. The 3580A uses a hetrodyne technique where the 0 Hz to 50 kHz input signal is mixed with a 100 kHz to 150 kHz signal from a Voltage-Tuned Local Oscillator (VTO). To select a given frequency present at the input of the Mixer, the VTO frequency is tuned so that the difference between it and the frequency of interest is 100 kHz intermediate frequency (IF) is fed through the IF Filter, detected and applied to the vertical axis of the CRT display. Signals outside the pass band of the IF Filter are rejected. The BANDWIDTH setting determines the bandwidth of the IF Filter and thus, the selectivity of the instrument.

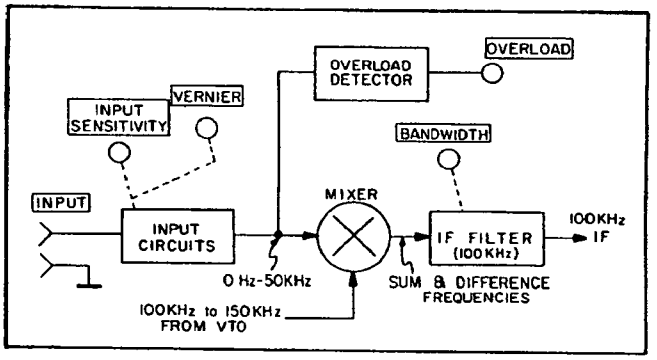


**Figure 3-13. Frequency Tuning.**

3-82. For operating purposes, the 3580A input channel can be pictured as a bandpass filter than can be manually tuned or swept over the 0 Hz to 50 khz frequency range. The instrument responds only to signals passing through the filter and thereby sorts out the various frequency components present at the input. The BANDWIDTH setting determines the width of the filter skirts at the -3 dB points above and below the tuned frequency:

$$\text{Lower 3 dB Point} = f_o - \frac{BW}{2}$$

$$\text{Upper 3 dB Point} = f_o + \frac{BW}{2}$$

Where:

$f_o$ = Tuned Frequency (0 Hz to 50 kHz)
BW = BANDWIDTH Setting (1 Hz—300 Hz)

**3-83. IF Bandpass Characteristic.** Many signal analyzers use active filters that have very steep skirts and a square-shaped bandpass characteristic that approaches the ideal "window filter". This type of filtering provides a high degree of selectivity, but because of its long transient response time, is not well suited for swept frequency applications. The 3580A IF Filter consists of 5 synchronously-tuned crystal filter stages. The bandpass characteristic of the synchronously-tuned filter (Figure 3-14) closely approximates a gaussian response. The gaussian filter provides good selectivity and, because of its relatively short transient response time, is considered optimum for sweeping.

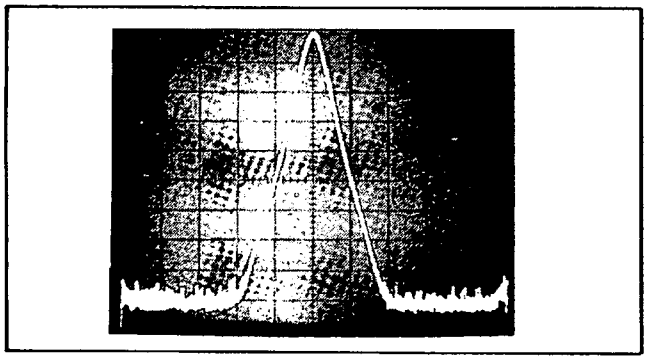

**Figure 3-14. IF Filter Response.**

**3-84. Shape Factor.** The shape factor of the 3580A IF Filter is approximately 10:1 on the 1 Hz through 100 Hz bandwidths and 8:1 on the 300 Hz bandwidth. A shape factor of 10:1 means that the filter skirts are 10 times wider at the -60 dB points than at the -3 dB points. Similarly, a shape factor of 8:1 means that the skirts are 8 times wider at the -60 dB points than at the -3 dB points. On the 10 Hz bandwidth, for example, the -3 dB points are 10 Hz apart and the -60 dB points are 10 x 10 or 100 Hz apart. The filter is, in effect, centered on the tuned frequency, $f_o$, and exhibits 3 dB of rejection to signals that are ± 5 Hz away from $f_o$ and 60 dB of rejection to signals that are ± 50 Hz away from $f_o$.

**3-85. Equivalent Noise Bandwidth.** When making noise measurements with the 3580A, it is necessary to use the "equivalent noise bandwidth" rather than the 3 dB bandwidth indicated by the BANDWIDTH setting. In the 3580A, the equivalent noise bandwidth is 12% wider than the *absolute* 3 dB bandwidth. Note that the specified bandwidth tolerance is ± 15%. This means that the absolute 3 dB bandwidth can be 15% wider or narrower than the BANDWIDTH setting. For optimum accuracy, measure the absolute 3 dB bandwidth of your instrument and use that figure to calculate the equivalent noise bandwidth.

**3-86. Bandwidth Selection.** There are 4 things to consider when selecting a BANDWIDTH setting:

1) Resolution
2) Low Frequency Limit
3) Response Time
4) Noise Rejection

**3-87. Resolution.** Resolution is the ability of the analyzer to separate signals that are closely spaced in frequency. An important point here is that the response of the analyzer to a CW signal is an amplitude vs. frequency plot of the IF Filter (Figure 3-15). The width and shape of the filter skirts are, therefore, the major limitations of resolution. If two CW signals appear in the passband (± 3 dB points) simultaneously, they cannot be separated (Figure 3-16). If two signals differing widely in amplitude are both inside the filter skirts, the response of the larger signal can hide or obscure that of the smaller signal (Figure 3-17). If the amplitude of the smaller signal is greater than that of the skirt produced by the larger signal the peak of the smaller signal can be resolved (Figure 3-18). For optimum resolution, the bandwidth should be narrowed to the point where only one signal is inside the filter skirts at any given time. Generally, the width of the filter skirts at the -80 dB bandwidth. Thus, optimum resolution can always be obtained when the frequency separation between signals is at least 15 times the BANDWIDTH setting.

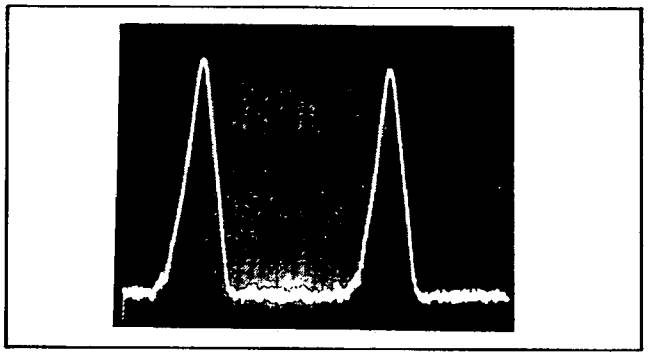

**Figure 3-15. Response of CW Signals.**

3-88. Table 3-3 lists the *approximate* maximum resolution for two signals whose relative amplitude is within the range of 0 dB to 70 dB. For example, on the 100 Hz Bandwidth, it is possible to resolve two signals that are

equal in amplitude and 2 X BW or 200 Hz apart. Similarly, it is possible to resolve two signals that differ in amplitude by 40 dB and are 5 X BW or 500 Hz apart.

3-89. In some analyzers, resolution is further limited by noise sidebands caused by residual FM in the local oscillator. In the 3580A, however, the 1 Hz bandwidth is the only bandwidth on which the noise sidebands can be resolved. On the 1 Hz bandwidth the noise sidebands are more than 70 dB below the peak of a CW response ± 10 Hz away from the center frequency, $f_o$ (Figure 3-19). In some isolated cases, the noise sidebands may slightly degrade the resolution on the 1 Hz bandwidth. For the most part, however, noise sidebands can be ignored.

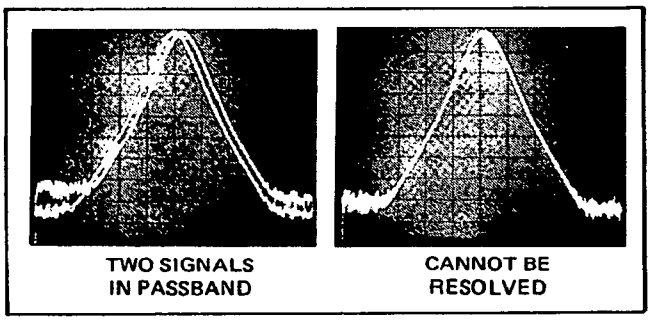


**Figure 3-16. Two Signals In Passband.**

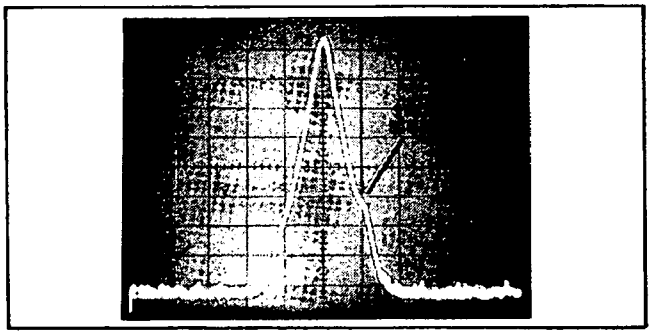

**Figure 3-17. Large Signal Hides Small Signal.**

**Table 3-3. Frequency Resolution.**

| AMPL Difference | Max. Resolution |
|---|---|
| 0 dB | 2 X BW |
| 10 dB | 2 X BW |
| 20 dB | 5 X BW |
| 30 dB | 5 X BW |
| 40 dB | 5 X BW |
| 50 dB | 10 X BW |
| 60 dB | 10 X BW |
| 70 dB | 10 X BW |

BW = BANDWIDTH setting

**3-90. Low Frequency Limit.** To utilize the full dynamic range of the instrument at low frequencies, the lowest frequency to be resolved must be at least 5 times the selected BANDWIDTH. This low frequency limit is due to the zero response described in the following paragraphs.

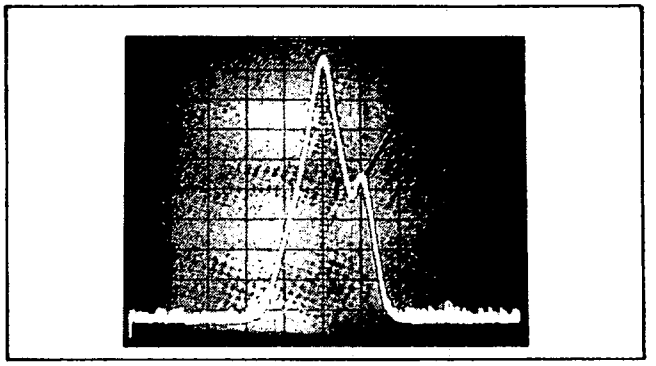

**Figure 3-18. Small Signal Resolved.**

3-91. As the 3580A frequency is tuned toward 0 Hz, the VTO frequency approaches the 100 kHz IF. Although the VTO signal is suppressed by the use of a double balanced mixer, part of the VTO signal feeds through the 100 kHz IF Filter and appears on the display. The response produced by the VTO signal peaks at 0 Hz and is appropriately called the "zero response". As with any other CW signal, the zero response on the display is an amplitude vs. frequency plot of the IF Filter (Figure 3-20). The wider the bandwidth, the wider the zero response.

3-92. The amplitude and bandwidth of the zero response determines the lowest frequency that can be resolved. On any BANDWIDTH setting, the peak amplitude of the zero response is more than 30 dB below the full scale reference set by the INPUT SENSITIVITY and amplitude VERNIER controls (AMPLITUDE REF LEVEL switch in NORMAL position). With the zero response more than 30 dB below full scale and a dynamic display range of 80 dB, the maximum difference between the peak of the zero response and any measureable input signal is between 40 dB and 50 dB. Table 3-3 indicates that the maximum resolution between two signals whose relative amplitude is between 40 dB and 50 dB is 5 times the BANDWIDTH setting.

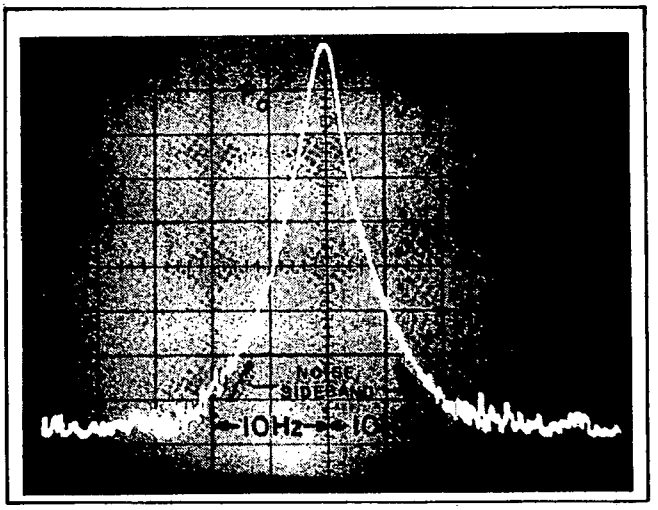


**Figure 3-19. Noise Sidebands (1 Hz BW)**

**3-93. Response Time.** Generally, when making swept frequency measurements, it is desirable to have good resolution and, at the same time, sweep as rapidly as possible. This involves a definite trade off since the narrow bandwidths provide the greatest resolution but require slower sweep rates. As the bandwidth is narrow, the IF Filter takes longer to respond to electrical changes taking place at its input. Consequently, the sweep rate must be slow so that the signal remains in the passband long enough for the filter to fully respond. Optimum sweep rate is discussed in Paragraph 3-135.

3-94. For applications where narrow bandwidths and slow sweep rates are required, the 3580A Adaptive Sweep feature can often be used to substantially reduce the measurement time. Adaptive Sweep is discussed in Paragraph 3-147.

**3-95. Noise Rejection.** The maximum sensitivity of the analyzer is limited by its own internally generated noise. As outlined in Paragraph 3-44, internal noise is a function of bandwidth, input resistance and tuned frequency. The narrower bandwidths provide the greatest noise rejection.

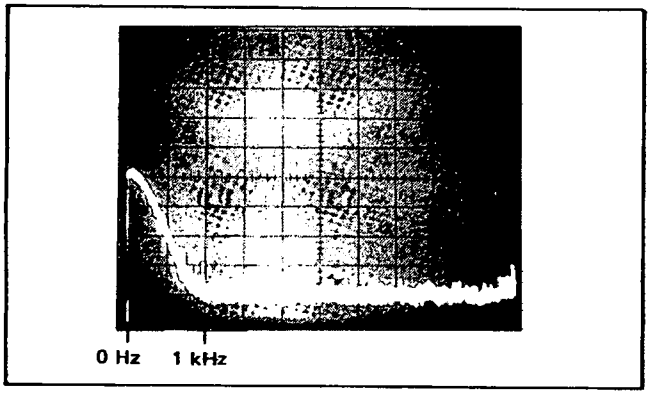


**Figure 3-20. Zero Response (300 Hz BW).**

### 3-96. Frequency Setting. Δ16

3-97. The front panel FREQUENCY controls tune the frequency of the analyzer over the 0 Hz to 50 kHz range. The controls can be used to set either the start or center frequency of a linear sweep. The start or center frequency, selected by the FREQUENCY controls, is indicated on the FREQUENCY display.

3-98. The FREQUENCY controls consist of a coarse FREQUENCY control (located closest to the front panel) and a fine FREQUENCY control. Turning the coarse control will change the frequency in the display at a rate of about 5.7 kHz per resolution. The fine control will change the displayed frequency at a rate of about 75 Hz per revolution.

**3-99. Frequency Display.** The FREQUENCY display indicates the start or center frequency in Hz. When the instrument is in the Manual Sweep mode, the FREQUENCY display shows the frequency at which the Manual Sweep is set. In the LOG mode the FREQUENCY display blanks. The FREQUENCY display resolution is 1 Hz represented by the least significant digit. The range of frequencies that may be displayed is 0 Hz to above 50 kHz. When the instrument is properly calibrated (Paragraph 3-195), the FREQUENCY display accuracy is: 3.5 Hz in the 1 Hz or 3 Hz Bandwidths when the ambient temperature is within the range of 0°C (32°F) to 55°C (131°F).

**NOTE**

*Whenever the frequency display attempts to go below 0 Hz, the numeric readout is replaced with five dots. Thus, a display of five dots indicates that the frequency of the display is less than zero hertz.*

**3-100. Start/Center.** With the START/CENTER slide switch in the START position, the FREQUENCY display indicates the frequency represented by the first vertical line on the left-hand side of the display graticule. This is the "start frequency" or frequency at which the sweep begins. With the switch in the CENTER position, the FREQUENCY display indicates the frequency represented by the center vertical line on the display graticule. This is the "center frequency" of the sweep. The START/CENTER switch is useful only in the REPetative, SINGle, or RESET mode. To indicate this, an amber light is provided to indicate when the instrument is in one of these sweep modes. When the instrument is in the MANual mode, the "MAN" indicator lights. If the instrument is in the LOG ZERO or LOG mode, both lights go out.

3-101. When surveying a spectrum containing two or more signals, it is generally convenient to leave the START/CENTER switch in the START position. The FREQUENCY controls can then be used to set the start frequency and the FREQUENCY SPAN control can be used to set the spectrum width or "end frequency". To observe one frequency component in a spectrum, set the START/CENTER switch to the CENTER position and set the FREQUENCY display to the frequency of interest. The frequency of interest will appear in the center of the display. The width of the center frequency response can be adjusted by changing the FREQUENCY SPAN or BANDWIDTH setting.

**3-102. Fine FREQUENCY control used as Log Zero control.** In the LOG ZERO Sweep mode, the fine FREQUENCY control is used to calibrate the Logarithmic frequency scale used in the LOG SWEEP mode. This is accomplished by adjusting the fine FREQUENCY control (in the LOG ZERO mode) such that the FREQUENCY display shows 20 Hz. In this way, the Logarithmic scale of the LOG SWEEP mode remains calibrated until the fine FREQUENCY control is readjusted.

### 3-103. Frequency Span Setting.

3-104. The FREQUENCY SPAN control sets the width of the spectrum to be observed during linear or manual sweeps. Excluding the 0 Hz position, there are ten FREQUENCY SPAN settings ranging from 5 Hz per division to 5 kHz per division. With ten horizontal divisions on the display, the overall spectrum width can be adjusted from 50 Hz to 50 kHz.

**3-105. 0 Hz Span.** With the FREQUENCY SPAN switch set to the 0 Hz position, the instrument remains at the start or center frequency indicated on the FREQUENCY display. The display, however, continues to sweep at the rate selected by the SWEEP TIME setting. The result is a graphical display of amplitude vs. *time.*

3-106. The amplitude vs. time feature is useful for observing the amplitude variations of a signal that occur over relatively long periods of time. For example, the amplitude of the 10 kHz sine wave shown in Figure 3-21A appears stable on a conventional oscilloscope but is actually varying at a very slow rate. In Figure 3-21B, the 3580A was used to monitor the amplitude of the 10 kHz signal over a 2, 000 second period. The 3580A amplitude vs. time display shows that the 10 kHz signal is amplitude modulated by a triangular-shaped signal whose frequency is 0.00166 Hz.

3-107. Because of its narrow bandwidth, the 3580A cannot respond to rapid changes in amplitude. The maximum modulating frequency that can be observed and measrued with any accuracy is approximately 100 Hz on the 300 Hz BANDWIDTH setting.

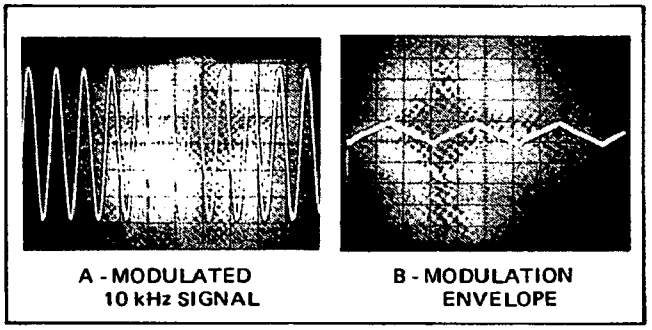


**Figure 3-21. Amplitude vs. Time.**

### 3-108. Frequency Out of Range.

3-109. There are a number of cases where the FREQUENCY and FREQUENCY SPAN settings are such that the frequency sweep attempts to go below 0 Hz or above 50 kHz. For example, if the start frequency is set to 10 kHz and the FREQUENCY SPAN setting is 5 kHz/div (50 kHz), the end frequency of the sweep is 60 kHz which is 10 kHz above the 50 kHz limit. If the instrument is set for a center frequency of 0 Hz, the start frequency is a negative value and the area between the start frequency and the center frequency is not meaningful.

3-110. To minimize erroneous indications, an internal detector senses when the frequency sweep tries to go below 0 Hz or above 50 kHz and, in turn, clears the display. The result is a clean baseline in areas where the frequency limits are exceeded (Figure 3-22).

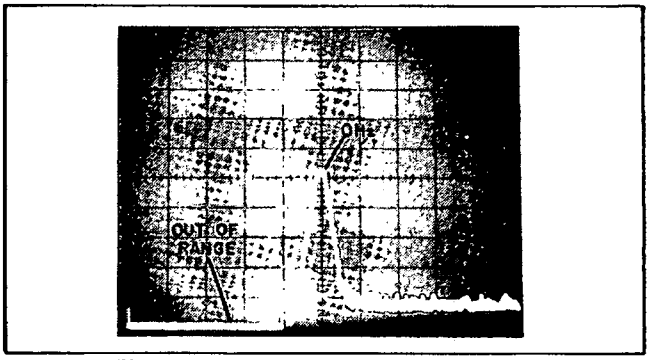


**Figure 3-22. Frequency Out of Range.**

3-111. The frequency out-of-range detector is not exact. Consequently, there are margin areas below 0 Hz and above 50 kHz where signals can be displayed. Typically, the margin below 0 Hz is about 500 Hz wide. Signals displayed in this negative margin are the images of the 0 Hz to 500 Hz signals displayed on the positive side of 0 Hz (Figure 3-23). The margin above 50 kHz is about 800 Hz wide and signals up to 50.8 kHz can generally be displayed.

3-112. The frequency sweep will go out of range under any of the following conditions:

a. When: Fstart + 10 Fspan = > 50 kHz
b. When: Fcenter + 5 Fspan = > 50 kHz
c. When: Fcenter - 5 Fspan = < 0 Hz

Where: Fstart = start frequency of sweep
Fspan = FREQUENCY SPAN setting
Fcenter = center frequency of sweep

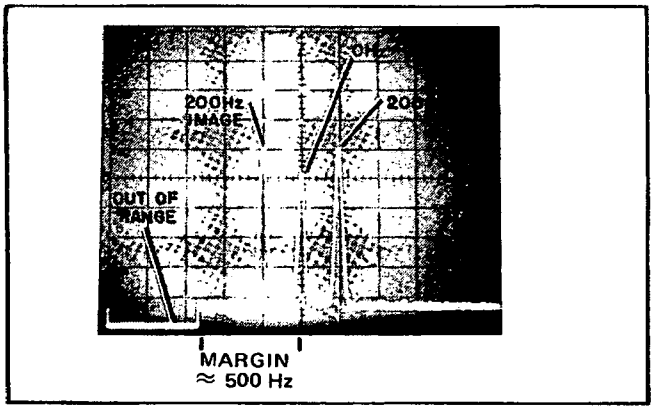


**Figure 3-23. Margin Below 0 Hz.**

### 3-113. Sweep Modes Δ16.

3-114. The front panel SWEEP MODE switch permits selection of six sweep modes:

1) REP (Repetitive)
2) SING (Single)
3) RESET
4) MAN (Manual)
5) LOG ZERO
6) LOG

**3-115. Repetitive Mode.** In the Repetitive sweep mode the instrument sweeps continuously over the selected frequency range (the STR/CTR indicator is on in this mode). The duration of each sweep is determined by the SWEEP TIME setting. If the FREQUENCY controls are varied during a sweep, there will be no change in the FREQUENCY display until the beginning of another sweep. This may seem inconvenient during long sweeps. To overcome this, simply press CLEAR WRITE while varying the FREQUENCY controls.

**3-116. Single Mode.** When the Single sweep mode is selected, the instrument sweeps one time over the selected frequency range and stops at the end frequency (the STR/CRT indicator is on in this mode). The instrument remains at the end frequency until another sweep mode is selected or until a new sweep is initiated. A new sweep can be initiated by:

a. Setting the SWEEP MODE switch to RESET and back to SING.

b. Pressing the CLEAR WRITE button. This clears the display and simultaneously resets the sweep. Do not use clear-write when making x - y recordings.

c. External triggering as outlined in Paragraph 3-143.

3-117. The Single sweep mode is particularly useful for making X-Y recordings using an external plotter connected to the rear panel RECORDER outputs. The operator can start the sweep, go about his business and return later to retrieve the completed recording.

3-118. It should be noted that the rear panel PEN LIFT output is operative *only* in the Single sweep mode. The PEN LIFT output is provided for use with X-Y recorders that have an electrically operated pen lift circuit enabling the pen to be remotely actuated by a contact closure (Paragraph 3-170).

**3-119. Reset Mode.** When the Reset mode is selected, the sweep is reset to the left-hand side of the screen and the instrument remains at the *start* frequency determined by the FREQUENCY display setting.

3-120. The Reset mode is used primarily to facilitate the quick reseting of the start or center frequency. Since the FREQUENCY display updates only between sweeps (in the Repetative mode), difficulty may arise in attempting to adjust the start or center frequency during slow sweeps. This difficulty is easily overcome by switching to the Reset mode, adjusting the start or center frequency (the STR/CRT indicator is on in this mode) and switching back to the Repetative mode. In general, for facile and expeditious tuning, switch to the Reset mode when adjusting the start or center frequency.

**3-121. Manual Mode.** In the Manual Sweep mode, the electronic frequency sweep is disabled and frequency control is transferred to the MANUAL VERNIER potentiometer. By adjusting the MANUAL VERNIER, the frequency can be set anywhere within the selected spectrum. With the MANUAL VERNIER set fully counterclockwise, the CRT sweep is at the left-hand side of the screen and the instrument is tuned to the start frequency determined by the FREQUENCY setting. As the vernier is rotated in a clockwise direction, the frequency increases and the video information is written (and retained) on the CRT just as it is when using the electronic sweep. In addition, the frequency at which the manual sweep is set, is shown on the FREQUENCY display. The "MAN" indicator lights to show the instrument is in the MANual mode.

3-122. The Manual sweep is useful for applications where it is necessary to precisely measure the frequency of a signal within the spectrum. For precise frequency measurements, simply manually tune to the desired signal and read the frequency directly from the FREQUENCY display. For an alternate method of frequency measurement, an electronic counter is connected to the rear panel TRACKING OSC OUT or LO OUTPUT to monitor the frequency. Using a narrow bandwidth such as 10 Hz or 30 Hz, the MANUAL VERNIER is adjusted so that the CRT sweep is at the peak of the signal to be measured. If the TRACKING OSC OUT is used, the frequency of the signal can then be read direclty from the counter. If the LO OUTPUT is used, the frequency must be calculated by dividing the counter reading by ten and substracting 100 kHz (Paragraph 3-178).

**NOTE**

*When the SWEEP MODE setting is changed from LOG ZERO to MAN or from RESET to MAN, the frequency sweep jumps from the start frequency to the frequency set by the MANUAL VERNIER. Conversely, when the SWEEP MODE is changed from MAN to LOG ZERO or from MAN to RESET, the frequency sweep jumps from the frequency set by the MANUAL VERNIER to 0 Hz or to the start frequency. In either case, the rapid change in frequency will distort the trace being displayed on the CRT. If it is desirable to retain a specific trace when switching to or from the Manual mode, set the MANUAL VERNIER fully counterclockwise before changing the SWEEP MODE setting.*

**3-123. Log Zero Mode.** The Log Zero mode is used to establish the correct starting frequency for the LOG sweep. When the Log Zero mode is selected, the sweep is reset to the left-hand side of the screen, the coarse FREQUENCY and FREQUENCY SPAN controls are disabled. To calibrate the log sweep, the front panel FINE FREQUENCY potentiometer is adjusted such that the FREQUENCY display reads 20 Hz. This ensures that the log sweep will start at 20 Hz.

**3-124. LOG Sweep.** When the LOG sweep mode is selected, the following things take place:

a. The coarse FREQUENCY, FREQUENCY SPAN and SWEEP TIME controls are disabled and their settings do not effect the log sweep. The FINE FREQUENCY potentiometer remains operative and, to ensure the proper starting point for the log sweep, it must be adjusted so that the FREQUENCY display reads 20 Hz in the Log Zero mode.

b. The instrument sweeps logarithmically over the 20 Hz to 43 kHz frequency range. The log sweep is repetitive and the duration of each sweep is approximately 5 seconds.

**NOTE**

*When the LOG sweep mode is first selected or when the LOG sweep is initiated by external triggering, optimum frequency accuracy will not be obtained until 3 or 4 continuous sweeps have been made. This peculiarity of the LOG sweep is caused by dielectric absorption (soak effect) in the integrating capacitor of the LOG sweep generator.*

3-125. By observing the CRT display it can be noted that each decade frequency of the LOG sweep is marked at the bottom of the graticule. The first vertical line on the left-hand side of the graticule represents 20 Hz, the second line represents 43 Hz and the third line 98.2 Hz. This sequence is repeated for each decade of frequency.

3-126. Figure 3-24 is a plot of frequency vs. time during a LOG sweep. At the beginning of the sweep the slope of the curve is gradual. A gradual slope indicates a small change in frequency for a given unit of time and thus, a slow sweep rate. As the sweep progresses the slope becomes steeper and the seep rate increases exponentially.

3-127. Because the 3580A is a narrow band instrument, the continuously increasing sweep rate presents a problem. At low frequencies narrow bandwidths are required to obtain good resolution. Narrow bandwidths can be used at low frequencies because the sweep rate is slow. As the frequency and sweep rate increases, however, the bandwidth must be widened so that the instrument can respond properly.

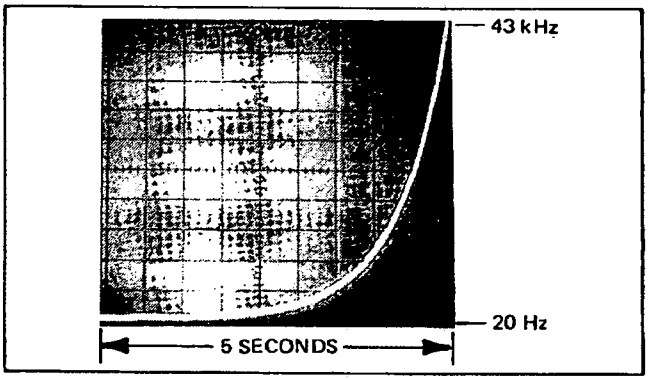


**Figure 3-24. Frequency vs. Time (LOG Sweep).**

3-128. The 300 Hz BANDWIDTH is the only bandwidth that allows the instrument to respond properly over the entire range of the LOG sweep. For this reason, the ADJUST light comes on when any bandwidth other than 300 Hz is selected. On the 300 Hz bandwidth, however, low frequency measurements are not possible because the resolution is poor and the skirt produced by the zero response covers nearly half of the display (Figure 3-25). For measurements at low frequencies a narrow bandwidth must be used. Table 3-4 lists the recommended bandwidths for measurements in given portions of the spectrum.

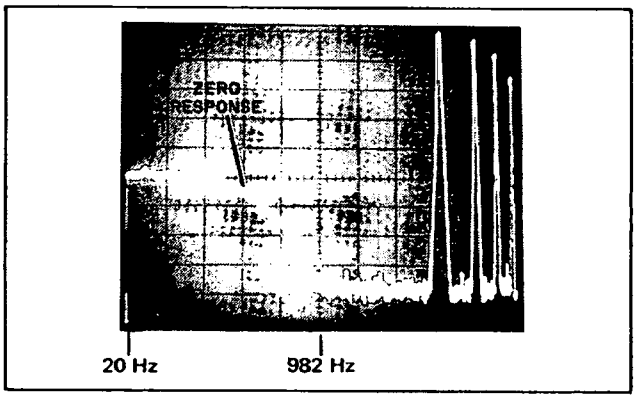


**Figure 3-25. Log Sweep (300 Hz BW).**

**Table 3-4. Recommended Bandwidths (LOG Sweep).**

| Frequency Range | Recommended Bandwidth |
|---|---|
| 20 Hz—200 Hz | 10 Hz |
| 200 Hz—982 Hz | 30 Hz |
| 982 Hz—9.82 kHz | 100 Hz |
| 9.82 kHz—43 kHz | 300 Hz |

3-129. The LOG sweep is intended primarily for making log amplitude vs. log frequency plots of 2-port devices. For this application, the network to be tested is connected in the closed-loop configuration where the rear panel Tracking Oscillator Output supplies the stimulus and the 3580A measures the response.

NOTE

*Because of the relatively fast sweep rates used in the Log sweep mode, conventional X-Y recorders connected to the rear panel RECORDER outputs cannot respond properly during LOG sweeps (see Paragraph 3-163).*

3-130. During closed loop measurements the bandwidth limitations are not quite as stringent as those previously described. This is because the input frequency, derived from the Tracking Oscillator Output, is always in or near the center of the passband. The only requirement is that the bandwidth be wide enough to permit the instrument to fully respond to amplitude variations introduced by the network under test. If the network under test does not have extremely steep skirts, a relatively narrow bandwidth can be used. For example, Figure 3-26 is a log amplitude vs. log frequency plot of a 20 kHz notch filter. The plot was made using a 30 Hz bandwidth.

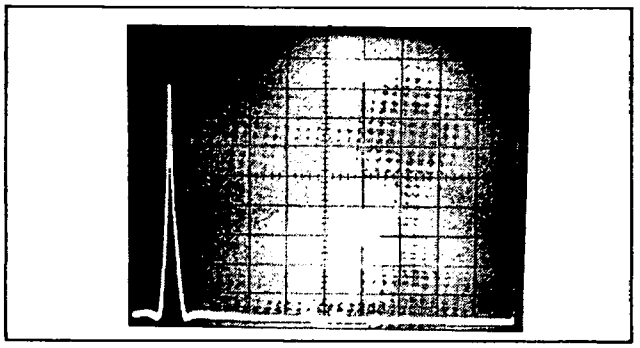

**Figure 3-26. Log Amplitude vs. Log Freq. Plot of 20 kHz Notch Filter (30 Hz BW).**

3-131. The easiest way to select the proper bandwidth for the Log sweep is to start with a wide bandwidth such as 100 Hz and then narrow the bandwidth until the amplitude or shipe of the response curve begins to change. When the response curve starts to change, the bandwidth is too narrow.

**3-132. Sweep Time and Sweep Rate.**

**3-133. Sweep Time Control.** The front panel SWEEP TIME control provides 14 sweep time settings ranging from 0.01 second per division to 200 seconds per division. With 10 horizontal divisions, total sweep time ranges from 0.1 second to 2,000 seconds.

**3-134. Sweep Rate.** The sweep rate in Hz per second is determined by the FREQ SPAN and SWEEP TIME settings:

$$R = \frac{F_s}{T}$$

Where: $R$ = sweep rate in Hz/sec
$F_s$ = FREQ SPAN setting
$T$ = SWEEP TIME setting

Increasing the frequency span or decreasing the sweep time increases the sweep rate.

**3-135. Optimum Sweep Rate.** The optimum sweep rate is the maximum rate at which the frequency can be swept without excessively compressing or skewing the amplitude response. When the 3580A is sweeping at what is considered to be the optimum rate, the amplitude compression is about 2%.

3-136. The optimum sweep rate is determined by the response time of the instrument. If the response time is long, the sweep rate must be slow so that the instrument can respond properly. The response time of the 3580A is determined by the BANDWIDTH and DISPLAY SMOOTHING settings. Narrowing the bandwidth or increasing the display smoothing increases the response time and, therefore, decreases the optimum sweep rate.

**3-137. Optimum Sweep Indicator.** The 3580A is equipped with an internal detector that monitors the BANDWIDTH, DISPLAY SMOOTHING, FREQUENCY SPAN and SWEEP TIME control settings. When these control settings are such that the sweep rate exceeds the optimum sweep rate, the front panel ADJUST indicator illuminates.

3-138. To sweep at the optimum rate, first set the FREQUENCY, FREQUENCY SPAN, BANDWIDTH and DISPLAY SMOOTHING controls to obtain the desired measurement parameters. Then starting with a slow SWEEP TIME setting, increase the sweep rate until the ADJUST light first comes on. When the ADJUST light comes on, rotate the SWEEP TIME control one position counterclockwise. The ADJUST light will go out and the instrument will sweep at the optimum rate.

3-139. Table 3-5 lists the optimum SWEEP TIME settings for various FREQ SPAN, BANDWIDTH and DISPLAY SMOOTHING settings.

3-140. For closed-loop measurements where the 3580A is used as a network analyzer, the optimum sweep rate is determined by the 3580A BANDWIDTH and DISPLAY SMOOTHING control settings and by the bandwidth of the network under test. During closed-loop measurements, the input frequency is always near the center of the passband and the IF Filter is required to respond only to amplitude variations introduced by the network. For this reason, the optimum sweep rate for closed-loop measurements is generally much faster than it is for open-loop measurements. In many closed-loop measurement applications the sweep rate can be set 20 to 25 times faster than the optimum rate indicated by the ADJUST light.

3-141. If the optimum sweep rate is not limited by the bandwidth of the 3580A, it may be limited by the bandwidth of the network under test. For bandpass and low pass filters, a rough approximation of optimum sweep rate can be made using the following formula:

$$R = \frac{BW^2}{2}$$

Where: R = optimum sweep rate in Hz/sec
BW = bandwidth of network under test

3-142. In practice it is often difficult to predict the optimum sweep rate. For this reason, the simplest approach is to start with the optimum rate set using the ADJUST light. Then, while observing the response curve, gradually increase the sweep rate until the amplitude or shape of the curve begins to change. When the curve begins to change the sweep rate is too fast.

### 3-143. External Triggering.

3-144. The EXT TRIG IN connector enables the frequency sweep to be remotely inhibited using a contact closure or TTL Logic Levels. This signal may be used to inhibit the sweep in the single, repetitive or Log Sweep mode.

**Table 3-5. Optimum Sweep Time Settings.**

| Bandwidth Setting | Freq Span/Div | Spectrum Width | Optimum SWP Time (Smoothing Min.) | Optimum SWP Time (Smoothing Med.) | Optimum SWP Time (Smoothing Max.) |
|---|---|---|---|---|---|
| 1 Hz | 5 Hz | 50 Hz | 10 sec. | 100 sec. | — |
| 1 Hz | 10 Hz | 100 Hz | 20 sec. | 200 sec. | — |
| 1 Hz | 20 Hz | 200 Hz | 50 sec. | — | — |
| 1 Hz | 50 Hz | 500 Hz | 100 sec. | — | — |
| 1 Hz | 0.1 kHz | 1 kHz | 200 sec.* | — | — |
| 3 Hz | 5 Hz | 50 Hz | 1 sec. | 10 sec. | 100 sec. |
| 3 Hz | 10 Hz | 100 Hz | 2 sec. | 20 sec. | 200 sec. |
| 3 Hz | 20 Hz | 200 Hz | 5 sec. | 50 sec. | — |
| 3 Hz | 50 Hz | 500 Hz | 10 sec. | 100 sec. | — |
| 3 Hz | 0.1 kHz | 1 kHz | 20 sec. | 200 sec.* | — |
| 3 Hz | 0.2 kHz | 2 kHz | 50 sec. | — | — |
| 3 Hz | 0.5 kHz | 5 kHz | 100 sec. | — | — |
| 3 Hz | 1 kHz | 10 kHz | 200 sec.* | — | — |
| 10 Hz | 5 Hz | 50 Hz | 0.1 sec. | 1 sec. | 10 sec. |
| 10 Hz | 10 Hz | 100 Hz | 0.2 sec. | 2 sec. | 20 sec. |
| 10 Hz | 20 Hz | 200 Hz | 0.5 sec. | 5 sec. | 50 sec. |
| 10 Hz | 50 Hz | 500 Hz | 1 sec. | 10 sec. | 100 sec. |
| 10 Hz | 0.1 kHz | 1 kHz | 2 sec. | 20 sec. | 200 sec.* |
| 10 Hz | 0.2 kHz | 2 kHz | 5 sec. | 50 sec. | — |
| 10 Hz | 0.5 kHz | 5 kHz | 10 sec. | 100 sec. | — |
| 10 Hz | 1 kHz | 10 kHz | 20 sec. | 200 sec.* | — |
| 10 Hz | 2 kHz | 20 kHz | 50 sec. | — | — |
| 10 Hz | 5 kHz | 50 kHz | 100 sec. | — | — |
| 30 Hz | 5 Hz | 50 Hz | 0.01 sec.** | 0.1 sec. | 1 sec. |
| 30 Hz | 10 Hz | 100 Hz | 0.02 sec. | 0.2 sec. | 2 sec. |
| 30 Hz | 20 Hz | 200 Hz | 0.05 sec. | 0.5 sec. | 5 sec. |
| 30 Hz | 50 Hz | 500 Hz | 0.1 sec. | 1 sec. | 10 sec. |
| 30 Hz | 0.1 kHz | 1 kHz | 0.2 sec. | 2 sec. | 20 sec. |
| 30 Hz | 0.2 kHz | 2 kHz | 0.5 sec. | 5 sec. | 50 sec. |
| 30 Hz | 0.5 kHz | 5 kHz | 1 sec. | 10 sec. | 100 sec. |
| 30 Hz | 1 kHz | 10 kHz | 2 sec. | 20 sec. | 200 sec.* |
| 30 Hz | 2 kHz | 20 kHz | 5 sec. | 50 sec. | — |
| 30 Hz | 5 kHz | 50 kHz | 10 sec. | 100 sec. | — |
| 100 Hz | 5 Hz | 50 Hz | 0.01 sec.** | 0.01 sec.** | 0.1 sec. |
| 100 Hz | 10 Hz | 100 Hz | 0.01 sec.** | 0.02 sec. | 0.2 sec. |
| 100 Hz | 20 Hz | 200 Hz | 0.01 sec.** | 0.05 sec. | 0.5 sec. |
| 100 Hz | 50 Hz | 500 Hz | 0.01 sec.** | 0.1 sec. | 0.5 sec. |
| 100 Hz | 0.1 kHz | 1 kHz | 0.02 sec. | 0.2 sec. | 1 sec. |
| 100 Hz | 0.2 kHz | 2 kHz | 0.05 sec. | 0.5 sec. | 2 sec. |
| 100 Hz | 0.5 kHz | 5 kHz | 0.1 sec. | 1 sec. | 10 sec. |
| 100 Hz | 1 kHz | 10 kHz | 0.2 sec. | 2 sec. | 20 sec. |
| 100 Hz | 2 kHz | 20 kHz | 0.5 sec. | 5 sec. | 50 sec. |
| 100 Hz | 5 kHz | 50 kHz | 1 sec. | 10 sec. | 100 sec. |
| 300 Hz | 5 Hz | 50 Hz | 0.01 sec.** | 0.01 sec.** | 0.01 sec.** |
| 300 Hz | 10 Hz | 100 Hz | 0.01 sec.** | 0.01 sec.** | 0.02 sec. |
| 300 Hz | 20 Hz | 200 Hz | 0.01 sec.** | 0.01 sec.** | 0.05 sec. |
| 300 Hz | 50 Hz | 500 Hz | 0.01 sec.** | 0.01 sec.** | 0.1 sec. |
| 300 Hz | 0.1 kHz | 1 kHz | 0.01 sec.** | 0.02 sec. | 0.2 sec. |
| 300 Hz | 0.2 kHz | 2 kHz | 0.01 sec.** | 0.05 sec. | 0.5 sec. |
| 300 Hz | 0.5 kHz | 5 kHz | 0.01 sec.** | 0.1 sec. | 1 sec. |
| 300 Hz | 1 kHz | 10 kHz | 0.02 sec. | 0.2 sec. | 2 sec. |
| 300 Hz | 2 kHz | 20 kHz | 0.05 sec. | 0.5 sec. | 5 sec. |
| 300 Hz | 5 kHz | 50 kHz | 0.1 sec. | 1 sec. | 10 sec. |

3-145. In order to inhibit the sweep, the externally applied signal into the EXT TRIG IN connector is kept low. To allow the 3580A to perform a single sweep the inhibit signal is allowed to go high for greater than 1 msec, but for less than the total sweep time. If the inhibit signal is not returned to low within the specified time, additional sweeps may be initiated.

3-146. To remotely inhibit the frequency sweep apply the following levels to the center terminals of the EXT TRIG IN connector:

Sweep Inhibit: Ground (through < 10 K) or -0.5 V dc to 0.5 V dc.

Sweep Enable: Open or +2.5 V dc to +5 V dc.

**NOTE**

*The outer shield of the EXT TRIG IN connector is connected to case ground. The center terminal of the connector is the inhibit line.*

### 3-147. Adaptive Sweep.

3-148. One of the inconveniences associated with low frequency spectrum analyzers is the extremely slow sweep rates required when using narrow bandwidths. For example, to sweep over a 200 Hz spectrum using a 1 Hz bandwidth, the optimum sweep time setting is 50 seconds per division. This makes the overall measurement time 500 seconds or about 8 minutes. If a sweep time setting of 200 seconds per division is used, the total measurement time is 2,000 seconds or 33 minutes.

3-149. In many applications relatively wide portions of the spectrum being swept do not contain useful information. The plot shown in Figure 3-27, for example, has a number of narrow spectral components but more than 98% of the display is nothing but noise floor. Using a conventional sweep at the optimum sweep rate, it took more than 15 minutes to trace the plot shown in Figure 3-27. Using the 3580A Adaptive Sweep feature, however, the same plot (minus the noise floor) was traced in about 1.5 minutes (Figure 3-28).

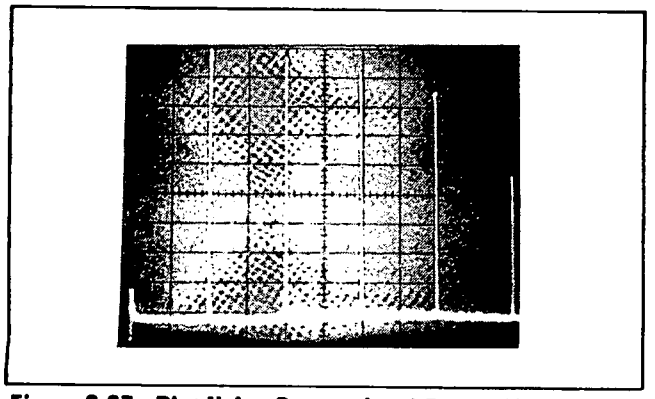

**Figure 3-27. Plot Using Conventional Sweep (15 minutes).**

3-150. To use the Adaptive Sweep feature, the operator sets a baseline threshold using the front panel ADAPTIVE SWEEP control. The baseline threshold can be adjusted anywhere from the bottom of the screen to approximately 70% of full scale. For the plot shown in Figure 3-28, the baseline threshold was set about 10 dB above the noise floor.

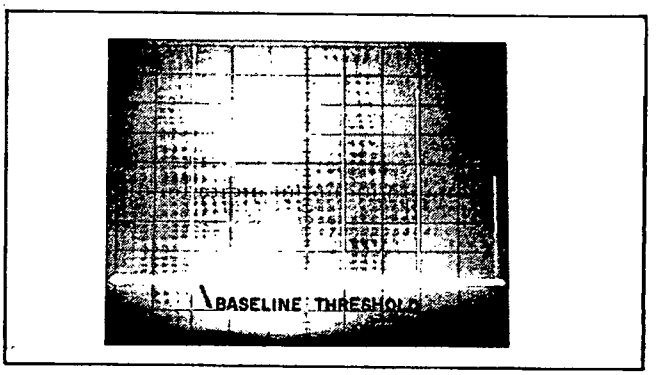


**Figure 3-28. Plot Using Adaptive Sweep.**

3-151. At the beginning of the Adaptive Sweep, the instrument sweeps at the rate selected by the SWEEP TIME setting. This ensures that the zero response or any other signal on or near the start frequency will be properly detected. After the sweep passes through any initial responses, the sweep rate is automatically increased to 20 or 25 times the selected rate. When the sweep reaches a response that rises above the baseline threshold, it backs up slightly, pauses to allow the IF Filter to settle and then sweeps slowly over the response at the panel-selected rate. When the response has been completely traced, the sweep is again speeded up until another response is encountered. As a result, the portions of the spectrum below the threshold level are not displayed, but the spectral responses above the threshold level are displayed just as they are using a conventional sweep. By sweeping rapidly through unused portions of the spectrum, the Adaptive Sweep greatly reduces the overall measurement time.

**3-152. Setting the Baseline Threshold.** When setting the baseline threshold for the Adaptive Sweep, the following guidelines must be observed:

*a. In the Linear amplitude mode the threshold must be at least 60% below the peak of the smallest signal to be displayed.* For example, if the peak of the smallest signal to be displayed is 4 vertical divisions, the threshold must be at least 2.4 divisions (0.6 X 4) below it. Similarly, if the peak of the smallest signal to be displayed is 1 vertical division, the threshold must be at least 0.6 of a division below it.

*b. In the Log amplitude mode, the threshold must be at least 8 dB below the peak of the smallest signal to be displayed.*

3-153. The reason for setting the baseline threshold below the peak of the smallest signal to be displayed is that the responses are detected when the instrument is sweeping 20 to 25 times faster than the panel-selected rate. During these fast sweeps the IF Filter does not have time to fully respond. As a result, the signals applied to the internal threshold detector are about 6 dB (50%) lower in amplitude than they are when sweeping at the optimum rate. If the threshold is not more than 6 dB below the peak of a signal, that signal will not be detected and consequently, will not be displayed.

NOTE

*Adaptive Sweep cannot be used on the 0.05 sec., 0.02 sec. and 0.01 sec. SWEEP TIME settings.*

3-154. With the SWEEP TIME control set to one position slower than the optimum rate, the signal compression during fast sweeps is approximately 3 dB or 30%. This allows the baseline threshold to be set 4 dB or 45% below the peak of the smallest signal to be displayed. The trade off here is that the measurement time is considerably longer than it is when sweeping at the optimum rate.

**3-155. Adaptive Sweep, Log 1 dB Mode.** The Adaptive Sweep is difficult to use in the Log 1 dB amplitude mode. This is because the display range is only 10 dB and, when sweeping at the optimum rate, the baseline threshold must be at least 8 dB below the peak of the smallest signal to be displayed. With the baseline threshold at the bottom of the screen, signals more than 2 dB below full scale will not be displayed. If the Adaptive Sweep is to be used in the Log 1 dB mode, set the SWEEP TIME control one or two positions slower than the optimum sweep rate. This will reduce the amplitude compression during fast sweeps and allow at least 50% of the display range to be used. *If the Adaptive Sweep is not to be used in the Log mode, be sure the ADAPTIVE SWEEP control is in the OFF position.*

**3-156. Adaptive Sweep Marker.** When the ADAPTIVE SWEEP control is set to the ON position, a sweep marker appears on the display. The sweep marker is a blank spot or gap in the trace that indicates the position of the frequency sweep. The sweep marker is provided because the digital memory that generates the display does not track the fast-forward and fast-backward excursions of the Adaptive Sweep. The sweep marker enables the operator to observe these excursions, making it easy to verify that the Adaptive Sweep is operating properly.

3-157. In some cases it may be desirable to display the sweep marker without using the Adaptive Sweep. This can be done in the Linear and Log 10 dB modes by setting the ADAPTIVE SWEEP control to the ON position and leaving the baseline threshold at the bottom of the display. With the baseline threshold at the bottom of the display, the video level exceeds the threshold level causing the instrument to continually sweep at the panel-selected rate.

**3-158. Digitally-Stored Display.**

3-159. A unique feature of the 3580A is its digitally-stored display. The digitally-stored display provides a number of unusual operating conveniences. For example, display adjustments are not required when the sweep parameters are changed. The digitally-stored trace is automatically cleared and updated at the correct rate. The INTENSITY and FOCUS controls have the same effect as those of a regular oscilloscope. Once they are set, they do not need to be readjusted. Moreover, the INTENSITY control can be set to any level without danger of burning the CRT face. Digital storage provides a bright, crips, flicker-free presentation. There is no blooming of display ambiguity.

3-160. One of the major advantages of digital storage is its ability to retain a trace indefinitely, i.e., as long as power is applied to the instrument. When a signal sweep is made, the trace that is generated will continue to be displayed until the CLEAR WRITE button is pressed or until it is replaced by a new sweep. If a trace is needed for furture reference, it can be permanently stored in memory by simply pressing the STORE pushbutton. The "stored trace" and a current or "refresh trace" can then be displayed simultaneously (Figure 3-29). If desired, the stored trace can be blanked from the display by pressing the BLANK STORE button. Releasing the BLANK STORE button returns the stored trace to the display.

3-161. A permanently stored trace is not effected by changing the control settings or by pressing the CLEAR WRITE button. The only way the stored trace can be cleared from memory is by releasing the STORE button or turning the power off. When the STORE button is initially released, the stored trace disappears and a series of dots appear on the display (Figure 3-30). The dots are automatically cleared when the display is updated by a new sweep.

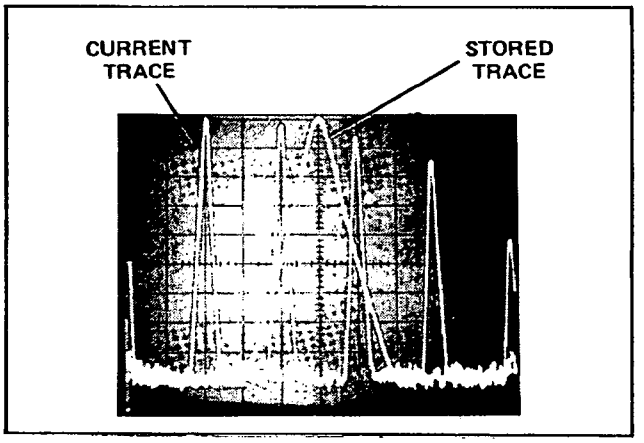


**Figure 3-29. Stored Trace and Current Trace Displayed Simultaneously.**

**3-162. Reduced Resolution.** The digital memory in the 3580A has 1024 addresses when the Y-axis amplitude information is stored. When the STORE button is not presses, each address corresponds to a given position of the frequency sweep and the X-axis of the display is divided into 1024 discreet segments. When the STORE button is pressed, the memory is split in half. One half (512 addresses) is used for the stored trace and the other half is for the refresh trace. Since only 512 addresses are used for each trace, the display resoultion is decreased. This means that the display is not quite as detailed as it is with a single trace stored in 1024 addresses. The techniques used for storing information and splitting the memory are such that the peaks of the responses are always retained. Thus, the reduced resolution does not normally obsecure any useful information.

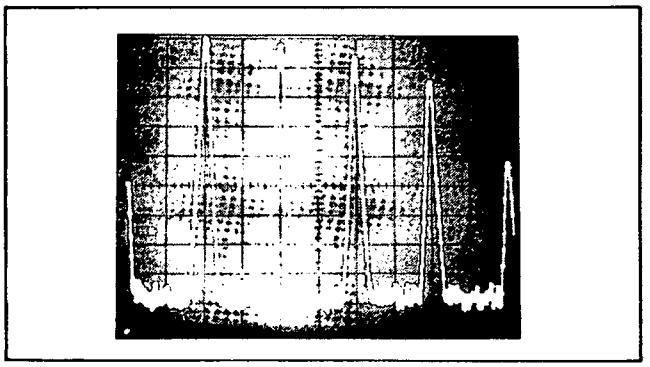

**Figure 3-30. Store Button Released.**

**3-163. Recorder Outputs.**

3-164. Recorder outputs are provided on the rear panel of the 3580A to permit the use of an external X-Y recorder/plotter. The -hp- Model 7035B Option 020 X-Y Recorder is recommended. Although the standard Model 7035B and other X-Y recorders can be used, the 7035B Option 020 is preferable because it has some special features that simplify scale calibration. In addition, the Model 7035B Option 020 is equipped with an X-axis log converter which can be used to scale the 3580A linear sweep to obtain a full log sweep over a 3-decade (10 Hz to 10 kHz) range.

**3-165. X-Axis Output.** The X-AXIS output supplies a dc voltage proportional to the position of the frequency sweep on the CRT display. When the sweep is at the start frequency, the X-Axis output is 0 V dc; when the sweep is at the end frequency, the output is + 5 V dc. The output resistance is 1 Kilohm, nominal.

3-166. In the Repetitive and Single sweep modes when Adaptive Sweep is not used, the X-Axis output is a 0 V to + 5 V linear ramp. When Adaptive Sweep is used, the output voltage tracks the forward and reverse excursions of the sweep. In the Manual Sweep mode, the X-Axis output voltage corresponds to the sweep position set by the MANUAL VERNIER control. When the Reset or Log Zero mode is selected, the X-Axis output remains at 0 V dc.

3-167. In the Log Sweep mode, the frequency is swept logarithmically but the X-Axis output is still a 0 V to + 5 V *linear* ramp. An output of 0 V dc corresponds to the 20 Hz start frequency, an output of + 2.5 V dc corresponds to 982 Hz at the center of the display and an output of + 5 V dc corresponds to the 43 kHz end frequency.

**NOTE**

*Because of the relatively fast sweep rates used in the Log Sweep mode, conventional X-Y recorders connected to the X-AXIS output cannot respond properly. To make amplitude vs. log-frequency recordings, use an X-Y recorder that has a built-in log converter for the X-axis input (-hp- 7035B Opt. 020). Connect the 3580A X-AXIS output to the X-axis input of the recorder. With the recorder set to the Log mode, sweep the 3580A at a slow linear rate using the Single or Repetitive Sweep mode.*

**3-168. Y-Axis Output.** The Y-AXIS output supplies a dc voltage proportional to the amplitude of the responses appearing on the display. An output of 0 V dc corresponds to the bottom of the screen; The Y-Axis output voltage is 0.5 V per division in the Linear Amplitude mode, 0.05 V per dB in the Log 10 dB mode and 0.5 V per dB in the Log 1 dB mode. Output resistance is 1 kilohm nominal

3-169. There are several things about the Y-AXIS output that should be noted:

a. In the Log 10 dB mode, rotating the AMPLITUDE REF LEVEL control in a clockwise direction offsets the display in steps of 10 dB. This also offsets the Y-Axis output in steps of + 0.5 V.

b. In the Log 1 dB mode, the display ranges from 0 dB (+ 5 V) to -10 dB (0 V). The Y-Axis output, however, extends from approximately + 1 dB (+ 5.5 V) to -13 dB (-1.5 V).

c. Changing the baseline threshold using the ADAPTIVE SWEEP control does not effect the Y-Axis output voltage.

**3-170. Pen Lift Output.** The PEN LIFT output is provided for use with X-Y recorders having electrically operated pen lift circuits that allow the pen to be remotely actuated by a contact closure. The PEN LIFT output is operative only in the Single sweep mode. If Adaptive Sweep is not used, a contact closure is present between the PEN LIFT output terminals for the duration of the single sweep. If Adaptive Sweep is used, the contact closure is present only when the instrument is sweeping slowly over a response. This prevents the fast-forward and fast-backward excursions of the sweep from being recorded. The PEN LIFT output terminals are isolated from case ground. Do not use clear-write to reset sweep.

### 3-171. Tracking Oscillator Output.

3-172. The rear panel TRACKING OSC OUT connector supplies a 5 Hz to 50 kHz sinusodial output signal that tracks the tuned or swept frequency of the instrument. The specified frequency response of the tracking oscillator output signal is ± 3% over the 5 Hz to 50 kHz frequency range. Total harmonic distortion and spurious is more than 40 dB below a 1 V rms signal level. The output impedance is 600 ohms, nominal. When the output is terminated in 600 ohms, the LEVEL control may be used to adjust the output from 0 V to 1 V rms.

3-173. The frequency accuracy of the tracking oscillator output signal is specified at ± 2.5 Hz relative to the center of the instrument's passband. On the 1 Hz and 3 Hz bandwidths, the passband is less than 2.5 Hz above and below the center frequency. Thus, the tracking oscillator output frequency may be slightly outside of the passband. This is of little consequence except during closed-loop measurements where the tracking oscillator signal is fed into the INPUT through a network under test. If the tracking oscillator frequency is outside the passband, insertion loss will be encountered. Under worst case conditions, maximum insertion loss is approximately 30 dB on the 1 Hz bandwidth and 8 dB on the 3 Hz bandwidth. Typically, the insertion loss is about 5 dB on the 1 Hz bandwidth and 2 dB on the 3 Hz bandwidth.

**WARNING**

*Dangerous voltages, capable of causing death, are present in this instrument. Refer the adjustment of A2C4 (discussed in Paragraph 3-174) to Service Trained Personnel only.*

3-174. For most closed-loop measurements optimum results will be obtained using the 10 Hz or 30 Hz bandwidth. If, for some reason, the 1 Hz or 3 Hz bandwidth is used insertion loss can be minimized by removing the top cover and adjusting A2C4 (100 kHz ADJ) so that the tracking oscillator frequency is in the center of the passband. An alternative approach is to apply an external reference signal to the TRACKING OSC IN connector and adjust the frequency of the reference so that the tracking oscillator frequency is in the center of the passband (see Paragraph 3-176).

### 3-175. Tracking Oscillator Input.

3-176. Figure 3-31 is a simplified block diagram of the Tracking Oscillator circuit. With the rear panel slide switch in the NORMAL position, the 100 kHz to 150 kHz signal from the VTO is mixed with a 100 kHz signal from a Crystal Oscillator. The 0 Hz to 50 kHz difference frequency is fed through a 50 kHz Low-Pass Filter and applied to the TRACKING OSC OUT connector. With the slide switch in the EXT REF position, the 100 kHz Crystal Oscillator is disconnected and an external reference signal can be applied to the Mixer through the TRACKING OSC IN connector. The frequency of the external reference signal can be varied about 100 kHz to offset or frequency modulate the tracking oscillator output signal. Increasing the frequency of the external reference signal decreases the tracking oscillator output frequency; decreasing the external reference frequency increases the tracking oscillator output frequency.

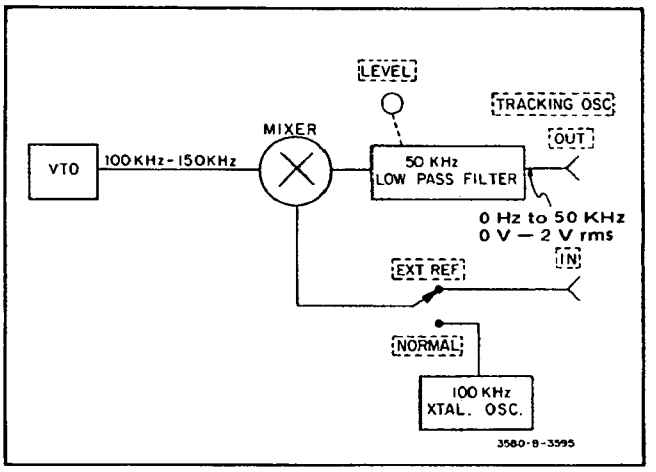


**Figure 3-31. Tracking Oscillator.**

3-177. The signal level applied to the TRACKING OSC IN connector should be 100 mV rms ± 10%. Use a highly stable signal source such as an -hp- Model 3320A/B or 3330A/B Frequency Snythesizer. The impedance of the tracking oscillator input is approximately 3.6 kilohms.

### 3-178. L.O. Output.

3-179. The VTO in the 3580A generates 1 MHz signal which is divided in frequency to obtain the 100 kHz to 150 kHz VTO signal that is applied to the Input Mixer and Tracking Oscillator. The 1 MHz to 1.5 MHz signal from the VTO is available at the rear panel LO OUTPUT connector. The signal level at the LO OUTPUT is 10 mV rms; output impedance is 1 kilohm, nominal.

3-180. The tuned frequency of the instrument can be measured to an accuracy of ± 5 Hz with an electronic frequency counter connected to the LO OUTPUT. The following formula can be used to calculate the tuned frequency from the counter reading:

$$F_t = \frac{F_c}{10} - 100\ \text{kHz}$$

Where: $F_t$ = tuned frequency
$F_c$ = counter reading

3-181. The tuned frequency of the instrument can be measured using either the L.O. Output or the Tracking Oscillator Output. It is generally preferable to use the

L.O. Output because it provides greater frequency resolution. Also the L.O. Output frequency can be measured using a 0.1 second gate time for fast response.

### 3-182. Option 001.

3-183. The 3580A Option 001 is equipped with an internal rechargeable battery pack and a protective front panel cover for complete portability.

**WARNING**

*To protect operating personnel, the 3580A Option 001 chassis must be grounded. For power line operation connect the power cord to a three-prong grounded receptacle. For battery operation connect the common (black) input terminal to earth ground or to an appropriate system ground. If a system ground is used be sure it is actually at ground potential and is not a voltage source.*

3-184. The 3580A Option 001 can be operated from the ac power line or from its own internal battery pack. With POWER switch set to the ON (AC) position, the instrument receives its power from the ac power line and a trickle charge is applied to the batteries. The trickle charge prevents the batteries from discharging, but is not sufficient to recharge the batteries in a reasonable time. With the POWER switch in the ON (BAT) position, the ac power is tuned off and the instrument receives it power solely from the internal battery pack. A fully charged battery pack will operate the instrument for more than 5 hours. When the batteries are discharged to the point where they cannot operate the instrument properly, the power is automatically shut off. This eliminates erroneous measurements caused by weak batteries and further prevents the batteries from being damaged due to excessive discharge.

3-185. To recharge the batteries, connect the instrument to an appropriate ac power source and set the POWER switch to the CHARGE position. The POWER light will illuminate. *The instrument cannot be operated while the batteries are being charged.* Recharge time for completely discharged batteries is 14 hours. The useful life of the batteries is more than 100 charge/discharge cycles.

**CAUTION**

*The instrument should not be left in the CHARGE mode for prolonged periods. A charge period of 14 hours is sufficient to recharge a fully discharged battery pack. Extended periods of overcharge in ambient temperatures exceeding 30°C (86°F) will severely degrade battery life and capacity by causing the cells to overheat.*

**3-186. Temperature Limits.** To prevent battery damage, the following temperature limits must be observed:

a. Operating Temperature: 0°C (+32°F) to +40°C (+140°F)

b. Charge Temperature Range: 0°C (+32°F) to +40°C (+104°F)

c. Storage Temperature Range: -40°C (-40°F) to +50°C (+122°F)

### 3-187. Option 002.

3-188. The 3580A Option 002 is equipped with a front panel slide switch which permits selection of three input configurations: Unbalanced, Balanced Bridge, and Balanced Terminated. These input configurations are illustrated in Figure 3-32. In addition, the 3580A Option 002 TRACKING OSC OUT is transformer coupled to provide a 600-ohm balanced output configuration, with an output level of 0 V to > 1 V rms into 600-ohms (Adjustable).

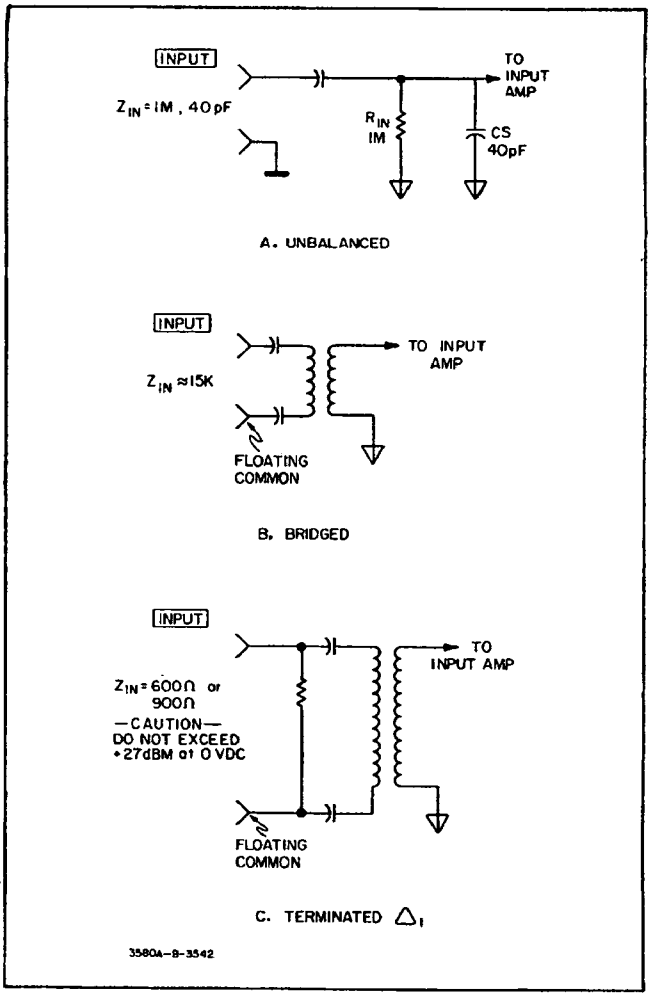


**Figure 3-32. Input Configurations (Option 002).**

CAUTION $\Delta_1$

*The differential signal level applied to the Option 002 Balanced Terminated input must not exceed + 27 dBm at 0 V dc. The combined ac and dc levels must be such that the power dissipated by the terminating resistor is less than 0.5 watt.*

3-189. The 3580A Option 002 can be calibrated for absolute measurements in rms volts, dBm/600 ohms or dBm/900 ohms. The selection is made using the front panel dBm 900 ohm/LIN - - dBm 600 ohm slide switch. Relative measurements can be made in dB or percent of full scale.

3-190. It should be noted that in the unbalanced input configuration, the input shunt capacitance is 40 pF, nominal. This differs from the 30 pF shunt capacitance of the standard Model 3580A. If a 10:1 divider probe is used, it must have sufficient adjustment range to compensate for the 40 pF shunt capacitance. An -hp- Model 10003A Voltage Divider Probe is recommended.

$\Delta_1$ Refer to Section VIII Backdating.

## 3-191. BASIC OPERATING PROCEDURES.

### 3-192. Instrument Turn On.

### 3-193. Power Line Operation.

a. Check the line voltage at the point of installation.

b. Refer to Figure 3-33 and set the 3580A for the line voltage to be used (100 V, 120 V, 220 or 240 V). Line voltage must be within + 5% to -10% of voltage setting.

c. Verify that the proper fuse is installed in the fuse holder:

| Line Setting | Fuse Type | -hp- Part No. |
|---|---|---|
| 100 V/120 V | 0.5 A, 250 V Normal Blow | 2110-0012 |
| 220 V/240 V | 0.25 A, 250 V Normal Blow | 2110-0004 |

d. Connect the detachable ac power cord to the rear panel power receptacle and to the power source.

e. Set the POWER switch to the ON (AC) position. The POWER light will illuminate.

f. Allow approximately 15 seconds for the CRT to warm up. Adjust the INTENSITY and FOCUS controls for a bright, clear presentation on the CRT. When the instrument is initially turned on, the display may be similar to the one shown in Figure 3-34. This display reflects the preferred states of the storage elements in the digital memory and is not meaningful. To clear the display, press the CLEAR WRITE button.

g. Allow a warm-up period of at least 1 hour before using the 3580A in a critical measurement application.

### 3-194. Battery Operation (Option 001).

a. Connect the low (black) terminal of the front panel INPUT connector to earth ground or to an appropriate system ground.

b. Set the POWER switch to the ON (BAT) position. The POWER light will illuminate.

c. Allow approximately 15 seconds for the CRT to warm up. Adjust the INTENSITY and FOCUS controls for a bright, clear presentation on the CRT. When the instrument is initially turned on, the display may be similar to the one shown in Figure 3-34. This display reflects the preferred states of the storage elements in the digital memory and is not meaningful. To clear the display, press the CLEAR WRITE button.

d. Allow a warm-up period of at least 1 hour before using the 3580A in a critical measurement application.

e. To recharge the batteries, perform Steps a through d of the power-line turn on procedure (Paragraph 3-193). Set the POWER switch to the CHARGE position. The POWER light will illuminate. The instrument cannot be used while the batteries are being charged.

CAUTION

*The instrument should not be left in the CHARGE mode for prolonged periods. A charge period of 14 hours is sufficient to recharge a fully discharged battery pack. Extended periods of overcharge in ambient temperatures exceeding 30°C (86°F) will severely degrade battery life and capacity by causing the cells to overheat.*

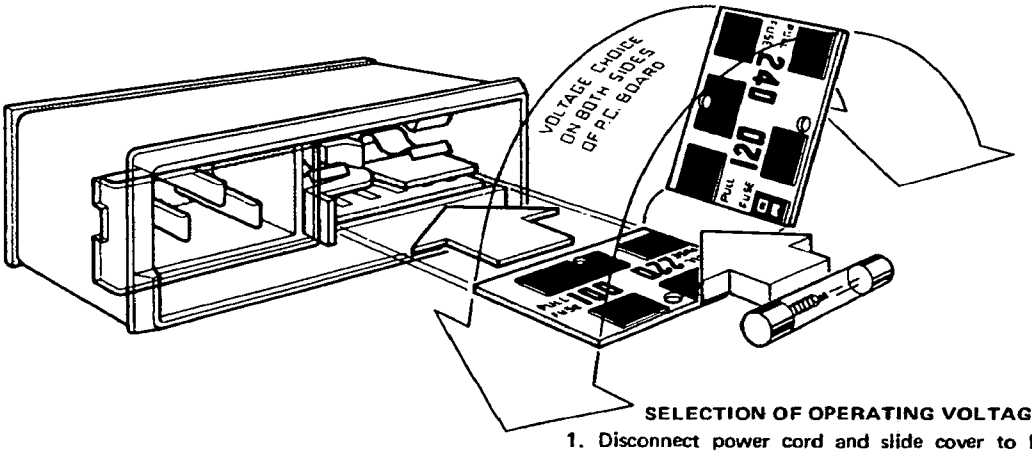


SELECTION OF OPERATING VOLTAGE

1. Disconnect power cord and slide cover to left to gain access to fuse compartment.
2. Remove line fuse by pulling outward on FUSE PULL.
3. To select operating voltage:
   a. Rotate FUSE PULL to left and remove PC board.
   b. Orient PC board so that desired voltage marking is on the top, left-hand side.
   c. Push PC board firmly into its slot.
4. Rotate FUSE PULL back to its normal position and insert fuse in holder. Be sure to use the correct fuse value.

Operating voltage is shown in module window.

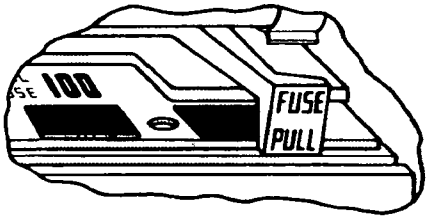


**Figure 3-33. Voltage Selection.**

### 3-195. Frequency Calibration Procedure (Log Sweep only) Δ16.

3-196. This procedure should be performed before each use of the Log Sweep mode.

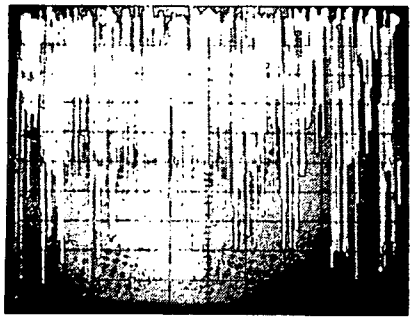

**Figure 3-34. Typical Turn On Display.**

3-197. Set the -hp- 3580A controls as follows:

| | |
|---|---|
| ADAPTIVE SWEEP | OFF |
| DISPLAY | STORE and BLANK STORE Released |
| AMPLITUDE MODE | LOG 10 dB/DIV |
| AMPLITUDE REF LEVEL | NORMAL |
| dBV/LIN - dBm Switch | dBV/LIN |
| INPUT SENSITIVITY | CAL |
| VERNIER | CAL (Fully CW) |
| FREQUENCY | N/A |
| START CTR | N/A |
| BANDWIDTH | 30 Hz |
| DISPLAY SMOOTHING | MIN |
| FREQ. SPAN/DIV | N/A |
| SWEEP TIME/DIV | N/A |
| SWEEP MODE | LOG ZERO |
| PRESS | CLEAR WRITE |

3-198. Adjust the fine FREQUENCY control until the FREQUENCY display reads 20 Hz.

### 3-199. Amplitude Calibration Procedure Δ16.

3-200. The Amplitude Calibration Procedure should be performed initially after warm-up and each time the BANDWIDTH setting is changed.

3-201. For operation on the 1 Hz or 3 Hz BANDWIDTH proceed as follows:

a. Turn the instrument on (Paragraph 3-192).

b. Set the 3580A controls as follows:

DISPLAY.....STORE and BLANK STORE Released
AMPLITUDE MODE.....LOG 10 dB/DIV
AMPLITUDE REF LEVEL.....NORMAL
dBV/LIN - dBm Switch.....dBV/LIN
INPUT SENSITIVITY.....CAL
VERNIER.....CAL (Fully CW)
FREQUENCY.....10000 Hz
START CTR.....CTR
BANDWIDTH.....1 Hz or 3 Hz (whichever is to be used)
DISPLAY SMOOTHING.....MIN
FREQ. SPAN/DIV.....0 Hz
SWEEP TIME/DIV.....N/A
SWEEP MODE.....MAN

c. Turn the ADAPTIVE SWEEP control to the on position so the sweep marker (gap) appears on the horizontal trace. Leave the baseline threshold at the bottom of the screen.

d. While pressing the CLEAR WRITE button, adjust the MANUAL VERNIER so that the sweep marker is in the center of the display. Release the CLEAR WRITE button and set the ADAPTIVE SWEEP control to the OFF position.

e. Carefully adjust the fine FREQUENCY control for a peak 10 kHz response in the center of the display.

f. Using a small screwdriver, adjust the front panel CAL 10 kHz potentiometer so that the peak of the 10 kHz response is exactly full scale.

g. Set the AMPLITUDE MODE to LOG 1 dB/DIV. Repeat Step f.

3-202. For operation on the 10 Hz, 30 Hz, 100 Hz or 300 Hz BANDWIDTH proceed as follows:

a. Turn the instrument on (Paragraph 3-192).

b. Set the 3580A controls as follows:

DISPLAY.....STORE and BLANK STORE Released
AMPLITUDE MODE.....LOG 10 dB/DIV
AMPLITUDE REF LEVEL.....NORMAL
dBV/LIN - dBm Switch.....dBV/LIN
INPUT SENSITIVITY.....CAL
VERNIER.....CAL (Fully CW)
FREQUENCY.....10000 Hz
START CTR.....CTR
BANDWIDTH.....10 Hz - 300 Hz (whichever is to be used)
DISPLAY SMOOTHING.....MIN
FREQ. SPAN/DIV.....See Table 3-6
SWEEP TIME/DIV.....See Table 3-6
SWEEP MODE.....REP

c. Using the ADAPTIVE SWEEP control, set the baseline threshold to -60 dB on the display.

d. Using a small screwdriver, adjust the front panel CAL 10 kHz potentiometer so that the peak of the 10 kHz response is exactly full scale.

e. Set the AMPLITUDE MODE to LOG 1 dB/DIV. Using the ADAPTIVE SWEEP control, set the baseline threshold to the bottom of the display. Repeate Step d.

**Table 3-6. Control Settings (Amplitude Calibration).**

| Bandwidth Setting | Freq. Span/Div | Sweep Time/Div |
|---|---|---|
| 10 Hz | 20 Hz | 0.5 sec |
| 30 Hz | 0.1 kHz | 0.2 sec |
| 100 Hz | 0.5 kHz | 0.1 sec |
| 300 Hz | 1 kHz | 0.02 sec |

### 3-203. Input Probe Compensation.

3-204. Before using a 10:1 voltage divider probe it is necessary to adjust the probe for optimum frequency response. Once the probe is properly adjusted, it should not require further attention. It is good practice, however, to perform periodic verification tests to ensure that optimum adjustment is maintained.

a. Turn the instrument on as outlined in Paragraph 3-192.

b. Connect the probe to the 3580A INPUT using a BNC to banana-plug (-hp- Part Number 1251-2277).

c. Set the 3580A controls as follows:

ADAPTIVE SWEEP.....OFF
DISPLAY.....STORE and BLANK STORE Released
AMPLITUDE MODE.....LOG 10 dB/DIV
AMPLITUDE REF LEVEL.....NORMAL
INPUT SENSITIVITY.....-10 dB
FREQUENCY.....00000 Hz
START CTR.....START
BANDWIDTH.....300 Hz
DISPLAY SMOOTHING.....MIN
FREQ. SPAN/DIV.....2 KHz
SWEEP TIME/DIV.....0.05 SEC
SWEEP MODE.....REP

d. Set the rear panel LEVEL control fully clockwise (facing rear panel).

e. Connect the probe tip to the rear panel TRACKING OSC OUT connector. Connect the ground lead of the probe to case ground.

f. Adjust the front panel amplitude VERNIER so that the horizontal trace is between 0 dB and -10 dB on the display.

g. Set the AMPLITUDE MODE to LOG 1 dB/DIV.

h. Adjust the probe so that its response is flat over the entire frequency range (Figure 3-35).

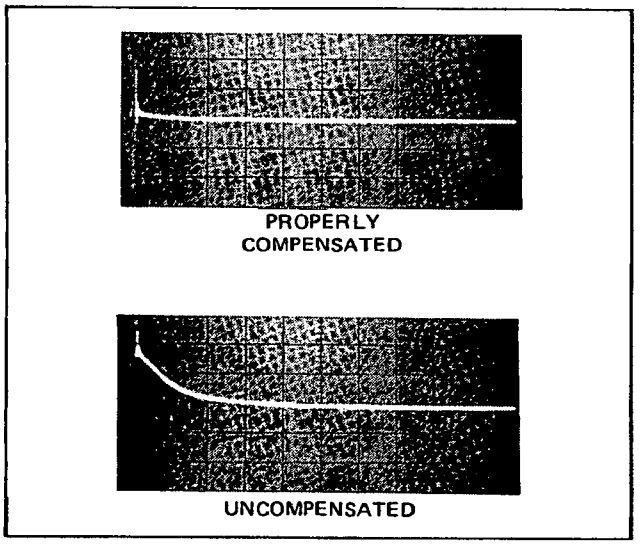


**Figure 3-35. Probe Compensation.**

### 3-205. Familiarization Exercise.

3-206. The following procedure demonstrates the Digital Storage, Adaptive Sweep and other operating features of the 3580A.

a. Turn the instrument on as outlined in Paragraph 3-92. Perform the Amplitude Calibration Procedure (Paragraph 3-199). Perform the amplitude calibration using the 100 Hz BANDWIDTH and the LOG 10 dB AMPLITUDE MODE.

b. Set the 3580A controls as follows:

ADAPTIVE SWEEP.....OFF
DISPLAY.....STORE and BLANK STORE Released
AMPLITUDE MODE.....LOG 10 dB/DIV
AMPLITUDE REF LEVEL.....NORMAL
dBV/LIN - dBm Switch.....dBV/LIN
INPUT SENSITIVITY.....CAL
VERNIER.....CAL (Fully CW)
FREQUENCY.....00000 Hz
START CTR.....START
BANDWIDTH.....100 Hz
DISPLAY SMOOTHING.....MIN
FREQ. SPAN/DIV.....5 KHz
SWEEP TIME/DIV.....1 SEC
SWEEP MODE.....REP

c. The spectral components of the 10 kHz calibration signal will now appear on the display. If the instrument is properly calibrated, the peak of the 10 kHz fundamental frequency component will be at full scale and the zero response will coincide with the first line on the left-hand side of the display graticule.

d. Set the BANDWIDTH switch to the 30 Hz position. The ADJUST light will illuminate to indicate that the sweep rate is too fast. As the trace is updated by a new sweep, the amplitudes of the various frequency components will be compressed because the IF Filter does not have time to fully respond.

e. Rotate the SWEEP TIME control counterclockwise until the ADJUST light goes out (10 SEC). When the ADJUST light goes out, the instrument is sweeping at the optimum rate.

f. Set the SWEEP MODE switch to the SING (Single) position. Press and release the CLEAR WRITE button. This will clear the display and initiate a new sweep. Allow 100 seconds for the display to be updated. The trace generated by the single sweep will continue to be displayed until it is cleared or replaced by a new sweep.

g. Press the STORE button and then press the BLANK STORE button. The trace currently being displayed is now permanently stored in memory and can be recalled at any time by releasing the BLANK STORE button.

h. Using the ADAPTIVE SWEEP control, set the baseline threshold about 10 dB above the noise floor.

i. Press and release the CLEAR WRITE button to initiate a new sweep. Observe the fast and slow excursions of the Adaptive Sweep. Note that the pen lift relay clicks each time the instrument begins to sweep slowly over a response. The Adaptive Sweep takes only about 15 seconds to trace the plot that previously took 100 seconds.

j. Set the ADAPTIVE SWEEP control to the OFF position. Release the BLANK STORE button to compare the 15 second trace and the 100 second trace. The two traces will be identical except the 15 second trace obtained using the Adaptive Sweep will not have a noise floor. Again press the BLANK STORE button. The permanently stored trace will disappear.

k. Set the SWEEP MODE switch to the REP (Repetitive) position.

l. To examine the 20 kHz frequency component in greater detail, set the START/CTR switch to CTR, set the FREQ SPAN/DIV to 0.5 KHz and set the SWEEP TIME/DIV to 1 SEC. At this point, the center of the display is 0 Hz and the negative frequencies on the left-hand side of 0 Hz are blanked. Set the FREQUENCY

display to 20000 Hz. When the trace is updated by a new sweep, the 20 kHz frequency component will appear in the center of the display.

m. Set the BANDWIDTH switch to 300 Hz. This will make the 20 kHz component wider because the analyzer's response to a CW signal is an amplitude vs. frequency plot of the IF Filter.

n. Release the BLANK STORE button. The permanently stored trace will reappear on the display. Even though the sweep parameters have been changed, the stored trace appears exactly as it did when the STORE button was initially pressed.

o. Set the FREQ SPAN/DIV to 5 KHz and allow 10 seconds for the display to be updated.

p. Release the STORE button. The previously stored trace will disappear and a series of dots will appear on the current trace. The dots will be cleared when the display is updated by a new sweep.

### 3-207. Technique For Measuring Noise.

3-208. The 3580A uses peak detection on the sweep spectrum. Therefore, the noise displayed is peak noise and can be several dB higher than average noise. Average noise measurements can be made if the following technique is used:

a. Use display smoothing.

b. Ignoring the adjust warning light, decrease Sweep Time/Div until the display noise level no longer decreases. The spectrum shape of the noise should be gradually changing, not abruptly, allowing the spectrum analyzer to follow it well.

**3-209. Average Detection Error.** The video detector is an average responding full wave detector. This type of detector has an inherent error when detecting noise. In the 3580A, the error occurs in both the linear and log modes of operation. To correct for this error, multiply the displayed reading by 1.128 to get the rms value.

**3-210. Log Conversion Error.** In the Log mode of operation, an additional correction must be made to compensate for log conversion error. Add 1.5 dB to the corrected display reading.

**NOTES**

*1. Only "Gently" varying noise spectra can be accurately measured using this technique. Accurate measurement of both discrete lines and noise levels in the same spectrum is generally not possible.*

*2. To calculate the equivalent noise bandwidth, multiply the 3 dB bandwidth by 1.12. Remember that the 3 dB bandwidth has a tolerance of ± 15% and therefore should be measured if accurate results are desired.*

*3. The recorder Y Axis output is linear and continuous. Noise measurements can be made by connecting a true rms reading voltmeter to this output. See Paragraph 3-168 for operating information concerning the Y Axis output. The use of an X-Y recorder may also prove beneficial in making noise measurements.*

# SECTION IV
# THEORY OF OPERATION

## 4-1. INTRODUCTION.

4-2. This section contains a Simplified Block Diagram Description and a Functional Description of the 3580A Spectrum Analyzer.

## 4-3. SIMPLIFIED BLOCK DIAGRAM DESCRIPTION. Δ16

4-4. Refer to the Simplified Block Diagram (Figure 4-1) for the following discussion.

The 3580A can be divided into five major sections:

1) Amplitude Section
2) Frequency and Sweep Section
3) Digital Storage Section
4) Display
5) Frequency Display

## 4-5. Amplitude Section.

4-6. The Amplitude Section consists of an Input Circuit, an Overload Detector an Input Mixer, an IF Filter, Log and Linear IF Amplifiers, a Video Detector, a Video Filter and a Video Output Circuit.

**4-7. Input Circuits.** The Input Circuits, controlled by the front panel INPUT SENSITIVITY switch, provide the gain or attenuation needed to maintain the proper signal level at the input of the Mixer. The Input Circuits also contain a 50 kHz low-pass filter which prevents image frequencies (200 kHz and above) from reaching the Mixer.

**4-8. Overload Detector.** The Overload Detector at the input of the Mixer senses when the input level exceeds the design limits and, in turn, lights the front panel OVERLOAD indicator. This is an important function since signals that overdrive the mixer can produce harmonic and spurious mixing products which ultimately appear on the display.

**4-9. Input Mixer.** The Input Mixer is a double-balanced active mixer in which the 0 Hz to 50 kHz input signal is mixed with a 100 kHz to 150 kHz signal from the Voltage-Tuned Local Oscillator (VTO). The output of the Mixer is a composite signal containing the upper and lower sidebands.

4-10. To select a given frequency component present at the input of the Mixer, the VTO frequency is tuned so that the difference between it and the frequency of interest is 100 kHz:

$$Fvto - Fin = 100\ kHz$$

Where: Fvto = 100 kHz to 150 kHz VTO frequency
Fin = 0 Hz to 50 kHz input frequency

The 100 kHz intermediate frequency (IF) is fed through the IF Filter, detected and displayed on the CRT. Signals outside the passband of the IF Filter are rejected.

**4-11. IF Filter.** The IF Filter contains five cascaded crystal filter stages. The center frequency of the filter is 100 kHz and the 3 dB bandwidth varies from 1 Hz to 300 Hz as a function of the front panel BANDWIDTH setting. Since the Input Circuits and Input Mixer are broadband through 50 kHz, the selectivity of the instrument is determined entirely by the bandwidth of the IF Filter.

**4-12. Log and Linear Amplifiers.** The 100 kHz output of the IF Filter is applied to the Video Detector through a Log Amplifier in the Log Amplitude mode or through a Linear Amplifier in the Linear Amplitude mode. The Log Amplifier converts the amplitude of the incoming IF signal to a logarithmic value, providing an 80 dB display range. The Linear Amplifier is a conventional amplifier circuit in which the gain is varied to provide the 20 V, 10 V, 2 V, 1 V ranging sequence used in the Linear mode. Also, the Linear Amplifier contains a variable attenuator which increases the overall gain as the AMPLITUDE REF LEVEL switch is changed from the X1 position.

**4-13. Video Detector.** The Video Detector is an average-responding, full-wave detector circuit which produces a dc voltage proportional to the amplitude of the 100 kHz log or linear input signal.

**4-14. Video Filter.** The Video Filter is an RC filter network controlled by the BANDWIDTH and DISPLAY SMOOTHING controls. The purpose of the filter is to smooth-out the ripple and noise riding on the detected video signal.

**4-15. Video Output Circuit.** The Video Output Circuit functions as an output buffer in the Linear mode and as a variable gain amplifier in the Log 10 dB and Log 1 dB modes. In the Log 10 dB mode, a variable dc offset voltage, controlled by the AMPLITUDE REF LEVEL switch, is summed with the video input signal. This allows the entire display to be offset in steps of 10 dB as the AMPLITUDE REF LEVEL setting is change from 0 dB to -70 dB. In the Log 1 dB mode the gain of the

Video Output Circuit is increased to provide an expanded scale of 1 dB per division. Changing the AMPLITUDE REF LEVEL setting then varies the dc offset voltage to select any 10 dB portion of the 80 dB range. The output of the Video Output Circuit, ranging from 0 V to + 5 V dc, is applied to the rear panel Y-AXIS output connector and to the Digital Storage Section.

### 4-16. Frequency and Sweep Section.

4-17. The Frequency and Sweep Section consists basically of a Ramp Generator, a Dial Mixing Amplifier, a Voltage-Tuned Local Oscillator (VTO) and a Tracking Oscillator.

**4-18. Ramp Generator.** The Ramp Generator produces a 0 V to + 5 V linear ramp which is applied to the Dial Mixing Amplifier and to the Digital Storage Section. The frequency of the ramp is determined by the front panel SWEEP TIME setting. The FREQ SPAN control, located between the Ramp Generator and Dial Mixing Amplifier, determines the amplitude of the ramp applied to the VTO and thus, the overall change in frequency produced by the ramp.

**4-19. Dial Mixing Amplifier.** In the Dial Mixing Amplifier, the ramp voltage is combined with a variable dc voltage from the front panel FREQUENCY control. This dc voltage establishes the low-frequency limit or "start frequency" of the VTO.

**4-20. VTO.** The VTO generates a 100 kHz to 150 kHz square wave which is applied to the Input Mixer in the Amplitude Section and to the Tracking Oscillator.

**4-21. Tracking Oscillator.** In the Tracking Oscillator, the 100 kHz to 150 kHz VTO signal is mixed with a 100 kHz signal from a crystal oscillator. This produces the 0 Hz to 50 kHz tracking signal which is available at the rear panel TRACKING OSC OUT connector.

### 4-22. Digital Storage Section.

4-23. Because of the extremely slow sweep rates used in the 3580A, some form of display storage is required. The most common method for obtaining display storage is to use a storage CRT in which the display is retained by the phosphor or by a "storage mesh" located behind the CRT face. Relatively recent advances in large-scale integrated circuits, however, have made it possible to use a digital storage technique in the 3580A. Digital storage permits the use of a standard oscilloscope CRT and further provides several operating conveniences not available with conventional displays.

4-24. In the Digital Storage Section, the 0 V to + 5 V "frequency ramp" from the Frequency and Sweep Section is applied to an A to D converter where it is converted to binary and used to address a memory bank. At the same time the detected video information from the Amplitude Section is converted to binary by an A to D converter and stored in the memory locations addressed by the ramp. The binary video data is then nondestructively read out of memory, converted to dc, processed and applied to the vertical deflection plates of the CRT.

4-25. During the read cycle, a "display ramp," generated in the Digital Storage Section, is used to address the memory and drive the horizontal deflection plates of the CRT. The display ramp scans the memory and sweeps the display approximately 50 times each second. This is a much faster rate than that of the frequency ramp used for storing data. The memory contents are, therefore, refreshed at the slow frequency-sweep rate, while data is read-out of memory at the rapid display-sweep rate. The result is a flicker-free, stored presentation.

4-26. When the front panel STORE button is pressed, the display currently in memory is processed and stored in one-half of the memory locations. This leaves the other half of the memory available for the refresh trace. During the read cycle, the display ramp first scans the memory locations containing the refresh trace. It then recycles and scans the locations containing the previously stored trace. Due to the rapid scan rate of the display ramp, the stored trace and the refresh trace appear simultaneously on the CRT.

### 4-27. Frequency Display Section.

4-28. The Frequency Display Section consists of: a Limiter, a Time Base Generator, a Counter, a Display Driver, and a Display.

**4-29. Limiter Circuit.** The Limiter converts the Buffered 100 kHz Reference signal into a square wave that clocks the Time Base Generator. The Buffered 100 kHz Reference is first filtered through a 100 kHz bandpass network to eliminate any spurious signals that could cause time base errors. The output of the filter is then changed to a square wave by a comparator circuit. This square wave is called the Time Base Clock.

**4-30. Time Base Generator.** The Time Base Generator is used to generate the timing signals for the Counter. These timing signals start and stop the counter, and load a register with the last state of the counter. The Time Base Clock is the input for the Time Base Generator.

**4-31. Counter, Display Driver, and Display.** The 1 MHz -1.5 MHz L.O. signal from the VTO is first divided by two; the signal is then counted by the counter chip for an amount of the time determined by the Time Base Generator. The last state of the counter is then loaded into an on-chip register. Finally, the BCD contents of the register is scanned and outputted at the same time the corresponding digit strobes are outputttted. The BCD output is interfaced with the display via s BCD-to-

seven-segment-decoder/driver; the digit strobes are buffered and sent to the display. Thus, the contents of the register are displayed.

### 4-32. FUNCTIONAL DESCRIPTION.

#### 4-33. Amplitude Section.

4-34. Refer to the Amplitude Section Detailed Block Diagram (Figure 7-3) for the following discussion.

4-35. Input Attenuator. The Input Attenuator, controlled by the front panel INPUT SENSITIVITY switch, serves as an input voltage divider and coupling network between the INPUT connector and the Input Amplifier. The attenuator is comprised of 5 RC divider networks. These networks provide the required signal attenuation for the + 30 dB (30 V) through -10 dB (0.1 V) ranges. On the -20 dB (0.1 V) through -70 dB (0.1 mV) ranges, the Input Attenuator is bypassed by the Input Sensitivity switch and the input signal is applied directly to the Input Amplifier. Table 1 of the Detailed Block Diagram lists the maximum (full scale) input levels, input attenuation and resulting signal levels applied to the Input Amplifier for each INPUT SENSITIVITY setting.

4-36. Input Amplifier. The Input Amplifier is a low noise, high input-impedance amplifier circuit which provides variable gain and impedance conversion between the Input Attenuator and the Post Attenuator. The Input Amplifier gain, controlled by the INPUT SENSITIVITY switch, is approximately X1.25 (+1.4 dB) on the + 30 dB through -20 dB ranges and is increased to X15.1 (+ 21.6 dB) on the -40 dB and -70 dB ranges. Table 1 of the Detailed Block Diagram lists the full-scale input levels, Input Amplifier gain and full-scale output levels for each INPUT SENSITIVITY setting.

4-37. Post Attenuator. The Post Attenuator is a resistive divider network controlled by the INPUT SENSITIVITY switch and by the front panel slide switch (not selects dB/VLIN or dBm/HDEC. With the slide switch in the dB/VLIN positions, the post attenuation is -3 dB or -15 dB. With the switch in the dBm/HDEC position, the attenuation is -3 dB or -12 dB. Table 1 of the Detailed Block Diagram lists the full-scale input levels, post attenuation and output levels for each INPUT SENSITIVITY setting.

4-38. Post Amplifier. The output of the Post Attenuator is applied to the Post Amplifier through the wiper of the front panel VERNIER potentiometer, R2. The Post Amplifier provides the final stage of gain and buffering before the signal is applied to the Input Mixer. The Post Amplifier gain, controlled by the INPUT SENSITIVITY switch, is approximately X4.2 (+ 12.2 dB) for + 30 dB through -30 dB ranges and is increased to X45 (+ 33.2 dB) on the -40 dB through -70 dB ranges.

4-39. Table 1 of the Detailed Block Diagram lists the full-scale input levels, Post Amplifier gain and full scale output levels for each INPUT SENSITIVITY setting. In the Log 10 dB or Log 1 dB amplitude mode, the our-mulized full-scale output of the post Amplifier is 100 mV rms on all ranges. In the Linear mode, the full-scale output is 100 mV rms on the 10 V, 1 V, 0.1 V, etc. ranges and 63 mV rms on the 20 V, 2 V, 0.2 V, etc. ranges. To compensate for this difference in full-scale levels in the Linear mode, the gain of the Linear Amplifier (following IF Section) is increased on the ranges having a lower output voltage.

4-40. Overload Circuit. The Overload Circuit consists of an Overload Detector, an Overload Driver and an LED Overload Indicator. The Overload Detector is a full-wave peak detector designed to sense an overvoltage condition at the output of the Post Amplifier. During normal operation, the full-scale output of the Post Amplifier is 0.1 V rms or 0.14 V peak. If the signal level exceeds 0.14 V peak, the Overload Drive is gated on and the OVERLOAD indicator illuminates.

4-41. Note that the Overload Driver has one input labeled "Overload Inhibit." With the INPUT SENSITIVITY switch in the CAL position, +10 V dc is applied to the Overload Inhibit line creating the Overload Driver to remain out off. This prevents the 10 kHz calibration signal from producing an OVERLOAD indication. The calibration signal is a pulse train in which the amplitude of the 10 kHz fundamental-frequency component is set to produce full-scale deflection on the CRT. Because of the rich harmonic content of the pulse train, its overall amplitude is slightly greater than 1.4 V peak.

4-42. Low-Pass Filter. To prevent image frequencies (200 kHz and above) from reaching the Input Mixer, the signal from the output of the Post Amplifier is fed through a 50 kHz Low-Pass Filter network. This "Cauer" filter is a 7-pole, passive, LCR filter network. The response of the filter is essentially flat over the 3 Hz to 50 kHz input frequency range. The filter provides 50 dB of rejection at 100 kHz and more than 90 dB of rejection at 200 kHz. Due to the 604-ohm series input resistance (R65) and the 604-ohm terminating resistance (R91), the filter introduces 4 dB of insertion loss. This makes the normalized full-scale input to the Mixer equal to 50 mV rms or 31 mV rms at the Linear mode.

4-43. Input Mixer. The Input Mixer Section consists of an active mixer (U2), a gain control circuit and an output buffer (Q14-Q16).

4-44. The mixer is a monolithic, double-balanced multiplier circuit driven by a 0.1 V p-p, 100 kHz to 150 kHz square wave from the VTO. In the mixer, the square wave from the VTO alternately gates non-positive and negative portions of the 3 Hz to 50 kHz input signal, resulting in full-wave balanced multiplication between the two signals. When the mixer is proper-

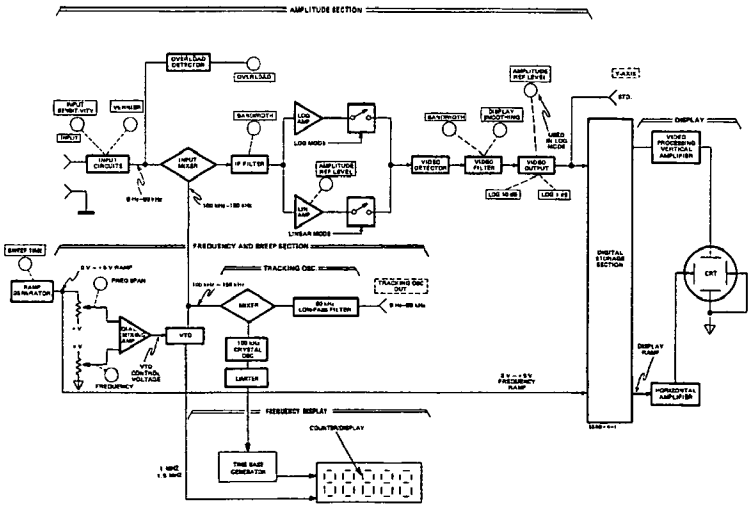


Figure 4-1. Simplified Block Diagram.

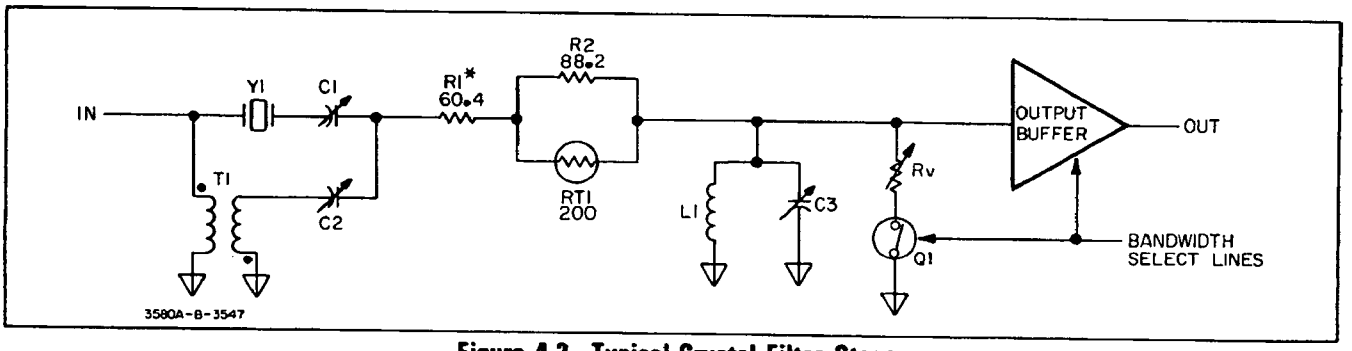


**Figure 4-2. Typical Crystal Filter Stage.**

ly balanced, the VTO and input frequencies are supressed and the composite output signal is predominately the upper and lower sidebands.

4-45. The gain control circuit at the output of the mixer is a resistive attenuator controlled by transistor switches Q12 and Q13. Transistor switch Q12 is energized on the 1 Hz and 3 Hz BANDWIDTH settings and Q13 is energized on the 10 Hz and 30 Hz BANDWIDTH settings. The result is that the signal level is decreased as the bandwidth in narrowed. The reasons for this are:

a. On the wider bandwidths, the noise floor in the IF Filter rises. A larger signal is, therefore, required to maintain the required signal-to-noise ratio.

b. On the narrow bandwidths, the IF Filter becomes non-linear when high-level signals are applied. Since the noise floor is lower, the non-linearity can be minimized by lowering the signal level.

4-46. The output buffer is a 3-stage amplifier circuit which provides gain and isolation between the Mixer and the IF Filter. The gain of the output buffer can be varied by adjusting the front panel CAL 10 kHz potentiometer.

**4-47. IF Filter.** The IF Filter consists of 5 synchronously-tuned crystal filter stages. Each stage (Figure 4-2) can be divided into 6 major sections:

1. Crystal (Y1) and Pulling Capacitor (C1)
2. Capacitive Compensating Network (T1, C2)
3. Resistive Compensating Network (R1, R2, RT1)
4. Parallel Resonant Circuit (L1, C3)
5. Variable Q Switch (Rv, Q1)
6. Output Buffer

*4-48. Crystal.* The crystals used in the IF Filter are preaged at the factory and are selected for a center frequency between 99,991 Hz and 99,993 Hz. The rearon for selecting a frequency slightly lower than the required *100.00 kHz*, is to allow the frequency to be adjusted by placing a "pulling" capacitor (C1) in series with the crystal (see Figure 4-3A).

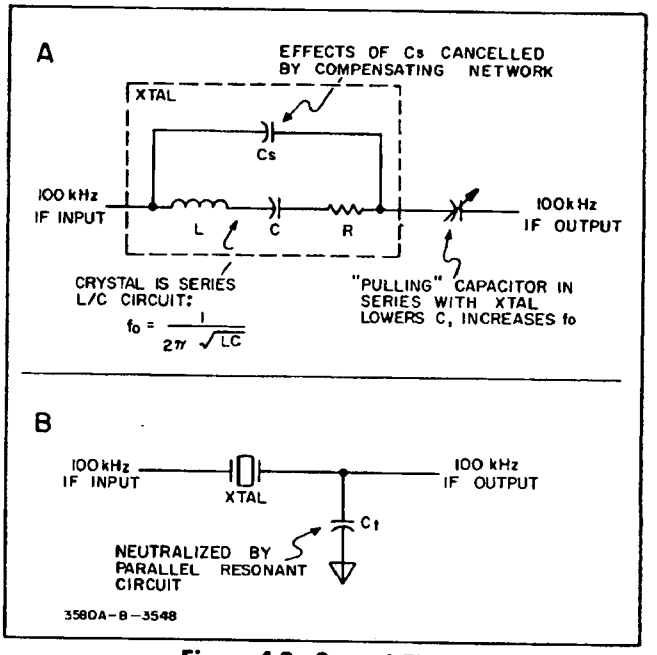


**Figure 4-3. Crystal Filter.**

*4-49. Capacitive Compensating Network.* The purpose of the capacitive compensating network is to neutralize the shunt capacitance (Cs) of the crystal and any stray capacitance introduced by the component leads and circuit board. Transformer T1 functions as an inverter, producing a voltage that is equal in amplitude and 180 degrees out of phase with the signal applied to the crystal. With the value of C2 set equal to the shunt capacitance, the circulating current flowing through the shunt capacitance is cancelled.

*4-50. Resistive Compensating Network.* The resistive compensating network compensates for variations in the series resistance (Rs) of the crystal. The value of R1 is factory selected so that:

$$R1 + Rs = 200 \text{ ohms}$$

The nominal value of Rs varies from crystal to crystal and is derived from the crystal manufacturer's specifications. The parallel network consisting of R2 and thermistor RT1 compensates for variations in Rs due to temperature.

*4-51. Parallel Resonant Circuit.* Stray capacitance to ground at the output of the crystal (Figure 4-3B) is neutralized by including it in the parallel resonant circuit formed by L1 and C3. The parallel resonant circuit peaks up the high end and balances out the symmetry of the filter skirts.

*4-52. Variable "Q" Switching.* The bandwidth and "Q" of each crystal filter stage can be defined by two basic equations:

$$BW = \frac{Fo}{Q}$$

Where: BW = 3 dB Bandwidth
Fo = 100 kHz Resonant Frequency
Q = Figure of Merit

$$Q = \frac{X}{R}$$

Where: Q = Figure of Merit
X = Reactance ($X_l$ or $X_c$) of crystal at Fo
R = Sum of compensated series resistance of crystal (Rs) and variable resistance to ground (Rv)

From these equations it can be noted that bandwidth is inversely proportional to Q and Q is inversely proportional to resistance. Thus, decreasing the resistance increases the Q and narrows the bandwidth; increasing the resistance decreases the Q and widens the bandwidth.

4-53. The bandwidth of the filter is varied by switching in the appropriate values of resistance (Rv) to ground. This is accomplished by transistor and diode switches controlled by lines from the front panel BANDWIDTH switch. The resistor values range from 127 K on the 300 Hz bandwidth to 120 ohms on the 1 Hz bandwidth.

4-54. With five cascaded stages, the bandwidth of each state must be 2.57 times the required bandwidth. Thus, for a 30 Hz bandwidth each state must have a bandwidth of 77.1 Hz and for a 1 Hz bandwidth each state must have a bandwidth of 2.57 Hz.

*4-55. Output Buffer.* The output buffer is a two-stage amplifier circuit which provides interstage gain and isolation. The buffer has a high impedance FET input state which prevents it from loading the crystal on the wider bandwidths. The gain of the buffer is Unity on the 300 Hz through 10 Hz bandwidths, approximately X1.2 on the 3 Hz bandwidths and X3 on the 1 Hz bandwidth. The gain increase is required on the 1 Hz and 3 Hz bandwidths to compensate for the insertion loss introduced by the low resistance of Rv.

**4-56. IF Amplifier.** The IF Amplifier section (Figure 4-4) consists of a Gain Control circuit and an LCR-tuned IF Amplifier.

*4-57. Gain Control Circuit.* The gain of the IF Amplifier is determined by the input resistance provided by the Gain Control circuit and by the impedance of the parallel LCR network in the feedback loop. The Gain Control circuit has six resistive input branches. The in-

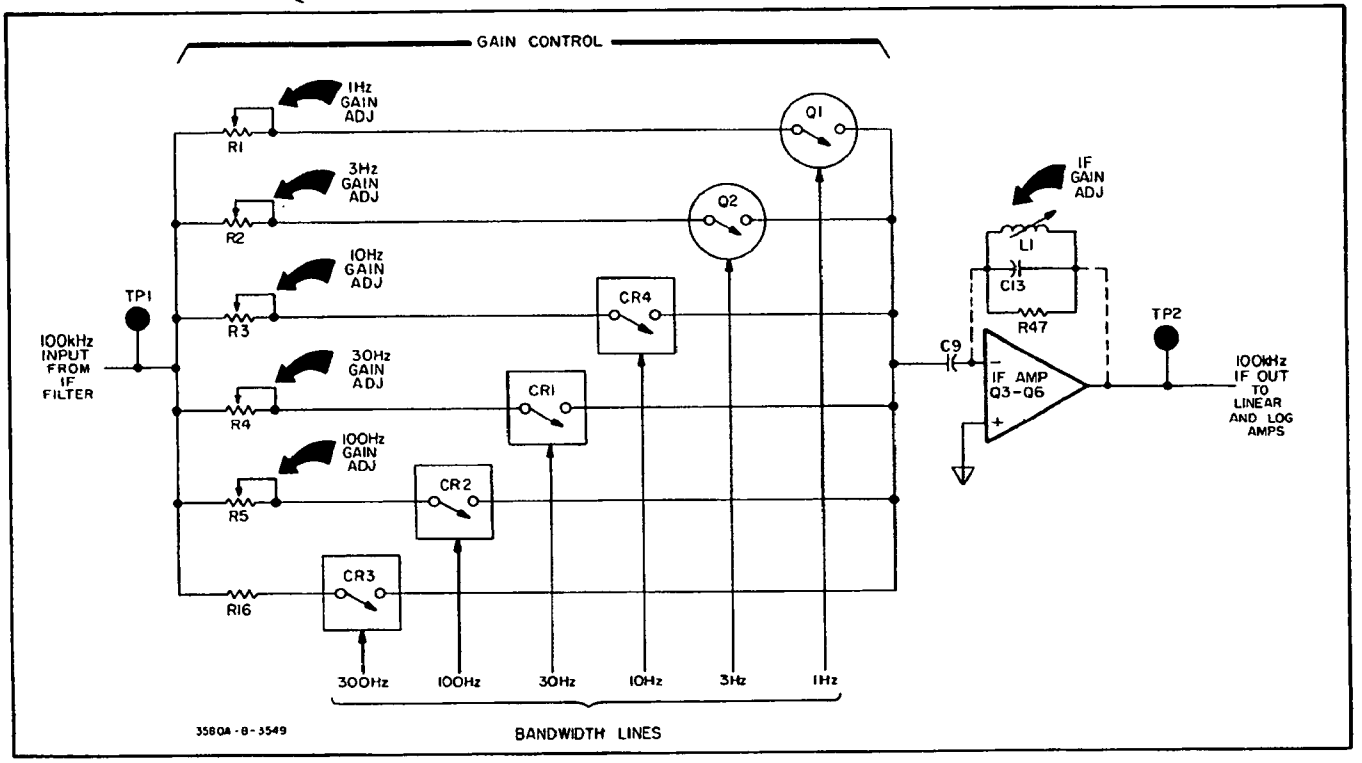


**Figure 4-4. IF Amplifier.**

put branches are individually switched into the circuit by transistor and diode switches controlled by lines from the BANDWIDTH switch. With the exception of the 300 Hz branch, each section of the Gain Control circuit contains a variable resistor. This provides a separate gain adjustment for each BANDWIDTH setting. The separate gain adjustments compensate for gain variations that occur in the Input Mixer and IF Filter.

*4-58. IF Amplifier.* The IF Amplifier is a 3-stage amplifier circuit which is tuned to 100 kHz by the parallel resonant tank circuit in the feedback loop. The 3 dB bandwidth of the amplifier is approximately 1.2 kHz. The IF Amplifier has a low-impedance complementary-symmetry output stage which drives the following log and linear amplifier stages. The full-scale signal level at the output (TP2) of the IF Amplifier is approximately 2.8 V rms on all six BANDWIDTH settings.

**4-59. Linear Amplifier.** The Linear Amplifier (Figure 4-5) consists of an Input Attenuator, an Input Amplifier, an Output Attenuator and an Output Amplifier. The Input Attenuator is controlled by the front panel AMPLITUDE REF LEVEL switch and provides either -40 dB or 0 dB of attenuation. The Input Amplifier provides a fixed gain of approximately 40 dB. The Output Attenuator, also controlled by the AMPLITUDE REF LEVEL switch provides -40 dB, -30 dB -20 dB or -10 dB of signal attenuation. Table 4-1 lists the input attenuation, Input Amplifier gain, output attenuation and the resulting gain or attenuation for each AMPLITUDE REF LEVEL setting. Note that as the AMPLITUDE REF LEVEL switch is rotated from X1 (NORMAL) position, the attenuation is decreased and the signal level is increased in steps of 10 dB.

4-60. The Output Amplifier stage provides the variable gain needed to maintain a 0 V rms to 1.2 V rms full-scale output on all input ranges and reference settings. The gain of the Output Amplifier is controlled by both the INPUT SENSITIVITY switch and the AMPLITUDE REF LEVEL switch. By observing these two front panel controls, it can be noted that the full-scale reference on the INPUT SENSITIVITY switch dial is indicated by a white window that is mechanically linked to the AMPLITUDE REF LEVEL switch. Changing the position of either switch changes the full-scale reference in a 20 V, 10 V, 2 V, 1 V sequence. This sequence differes from the 10 dB/step sequence provided by the A9 Input Circuit and the attenuators in the Linear Amplifier. For this reason, the gain of the Output Amplifier is changed on alternate ranges. With the full-scale reference set to 10 V, 1 V, 0.1 V, etc., the gain of the Output Amplifier is X56. With the reference set to 20 V, 2 V, 0.2 V, etc. the gain is increased to X88.

**Table 4-1. Linear Amplifier Gain.**

| Ampl Ref Level | Input Atten. | Input Amp Gain | Output Atten. | Net Gain or Atten |
|---|---|---|---|---|
| X1 | -40 dB | +40 dB | -40 dB | -40 dB |
| | -40 dB | +40 dB | -30 dB | -30 dB |
| X0.1 | -40 dB | +40 dB | -20 dB | -20 dB |
| | -40 dB | +40 dB | -10 dB | -10 dB |
| X0.01 | 0 dB | +40 dB | -40 dB | 0 dB |
| | 0 dB | +40 dB | -30 dB | +10 dB |
| X0.001 | 0 dB | +40 dB | -20 dB | +20 dB |
| | 0 dB | +40 dB | -10 dB | +30 dB |

**4-61. Log Amplifier.** The Log Amplifier (Figure 4-6) is a hybrid circuit consisting of a log amplifier package (U5) and four external control amplifiers (U1 - U4). The log amplifier package contains 12 differential amplifier stages. Each stage has a logarithmic output characteristic over a 10 dB range (Figure 4-7). Internal resistive dividers and the external control amplifiers bias each stage to respond to a different 10 dB portion of the input signal. The outputs of the 12 stages are summed in a common load ($R_L$), forming the composite output characteristic shown in Figure 4-8.

4-62. From Figure 4-8, the following can be noted:

a. When the input signal is below the range of a given stage, that stage will make essentially no contribution to the output of the log amplifier.

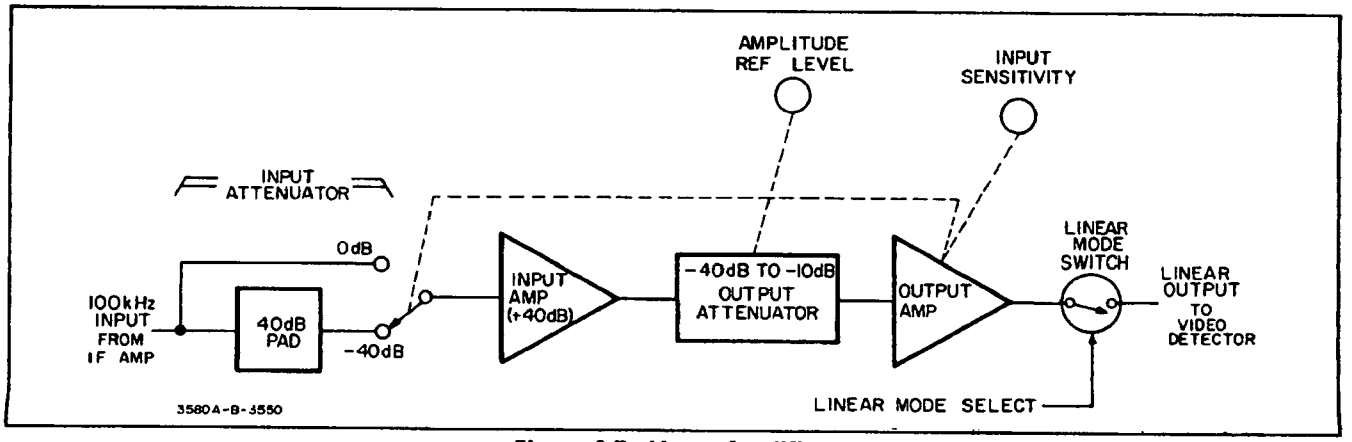


**Figure 4-5. Linear Amplifier.**

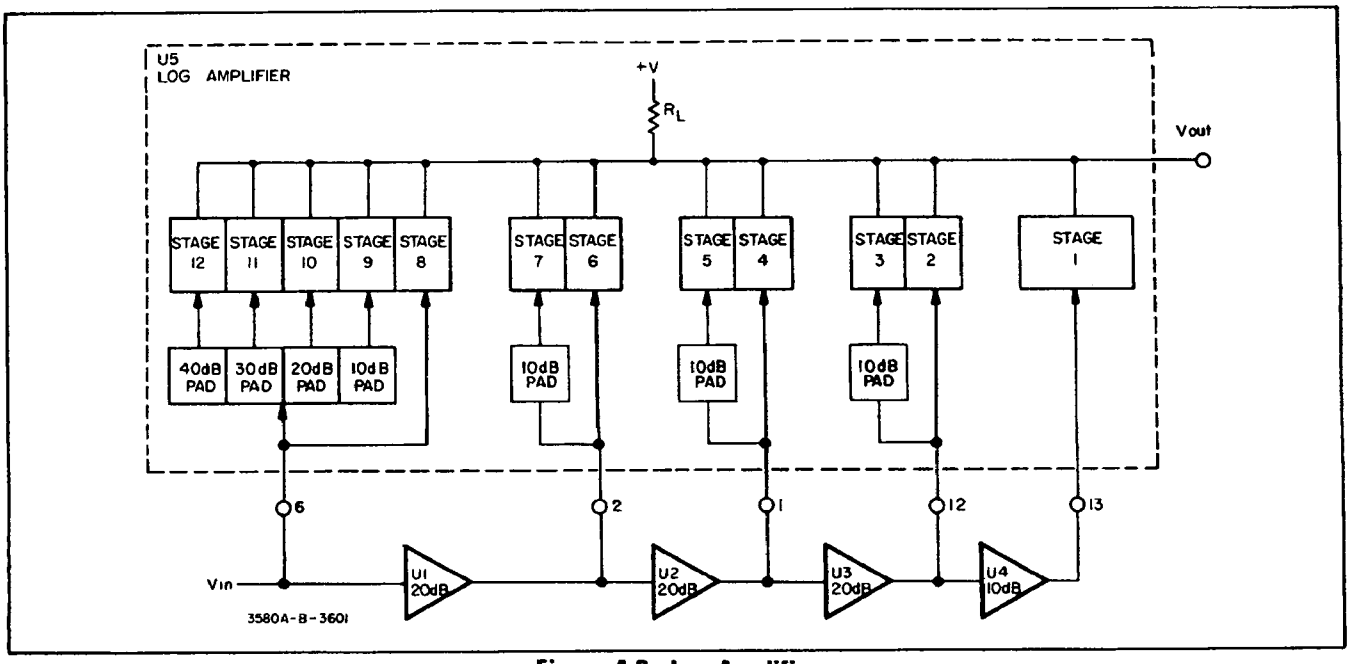


**Figure 4-6. Log Amplifier.**

b. When the input signal is above the range of a given stage, that stage will make a constant contribution to the output of the log amplifier.

c. When the input signal is within the range of a given stage, that stage provides the logrithmic output over a 10 dB range. The logarithmic output is added to the constant output of the more sensitive stages.

4-63. Since there are twelve 10 dB stages in the log amplifier package, it will appear that the overall dynamic range is 120 dB. In practice, however, the first and last stages do not produce usable outputs over their entire range. The dynamic range of the device is therefore limited to approximately 100 dB. The 3580A input levels are such that only 80 dB to 90 dB of the 100 dB range is used.

**4-64. Video Detector.** The Video Detector is an average-responding, active, full-wave detector circuit which produces a dc voltage proportional to the amplitude of the log or linear IF signal. The output of the Video Detector, ranging from 0 V to + 2.5 V dc full scale, is applied to the Video Filter.

**4-65. Video Filter.** The purpose of the Video filter is to smooth out the ripple and random noise riding on the detected video signal. The filter consists of a single-pole RC network followed by an output buffer. The response of the filter is varied by changing the values of the RC elements in the circuit. The amount of filtering is increased as the BANDWIDTH setting is narrowed or as the DISPLAY SMOOTHING control is varied from MIN to MAX.

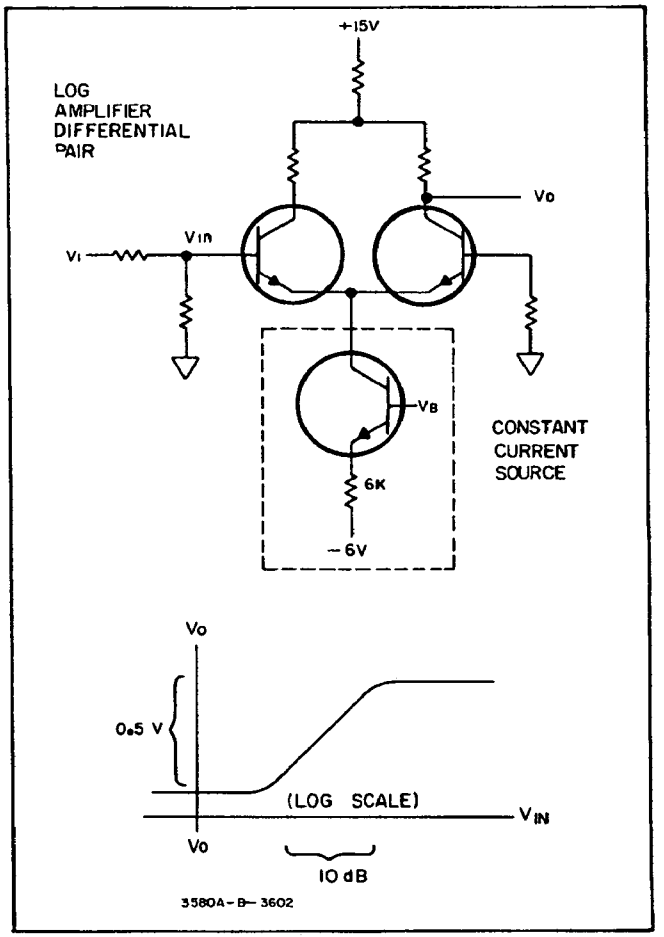


**Figure 4-7. Typical Log Amplifier Stage.**

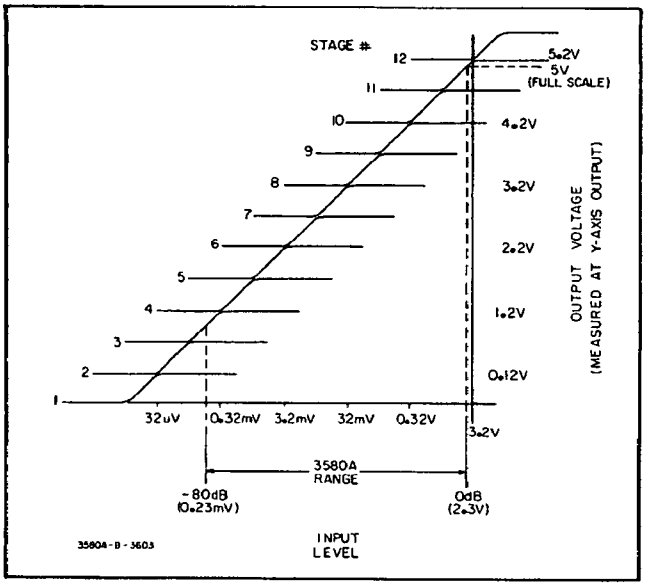


**Figure 4-8. Log Amplifier Input and Output Levels.**

**4-66. Video Output.** The Video Output circuits (Figure 4-9) consist of a Reference Divider, a Summing Amplifier and an Output Amplifier.

4-67. The 0 V to + 2.5 V dc video signal from the Video Detector is applied to the inverting (-) port of the Summing Amplifier where it is summed with a negative dc offset voltage from the Reference Divider. In the Log 10 dB and Log 1 dB amplitude modes, the dc offset voltage varies from -2.5V dc to -0.75 V dc as the AMPLITUDE REF LEVEL control is rotated from the 0 dB (NORMAL) position to the -70 dB position. This offfsets the display in steps of 10 dB. In the Linear mode, the offset voltage is fixed at -2.5 V dc and the CRT trace remains at the bottom of the screen.

4-68. In the Log 10 dB and Linear Amplitude modes, the gain of the Summing Amplifier is X2 and an offset of -2.5 V dc produces an output of + 5 V dc. This positions the CRT trace at the bottom of the screen. With a video response of + 2.5 V dc, the offset voltage is cancelled and the output of the Summing Amplifier drops to 0 V dc for full-scale deflection. When the Log 1 dB mode is selected, the gain of the Summing Amplifier is increased to X20. This expands the CRT scale from 10 dB per division to 1 dB per division.

4-69. With the Summing amplifier gain set to X20 and a video input of 0 V, the dc offset voltage from the Reference Divider drives the output of the Summing Amplifier positive. In this state, the Summing Amplifier output is limited to + 6.8 V dc by Zener diode CR29. An output between + 5 V and + 6.8 V positions the CRT trace at the bottom of the screen. If the positive video level equals the negative offset voltage, the output of the Summing Amplifier drops to 0 V for full-scale deflection. If the video level exceeds the offset voltage, the Summing Amplifier output is driven negative and is limited to -0.6 V by CR29. An output level between 0 V and -0.6 V peaks the display. Table 4-2 lists the offset voltage, displayed video levels, Summing Amplifier output levels and display range for each AMPLITUDE REF LEVEL setting.

4-70. The output of the Summing Amplifier is applied to the A8 Assembly through R125 and to the Output Amplifier. In the A8 Assembly, the video output from the Summing Amplifier is used to detect the presence of a video response for Adaptive Sweep purposes.

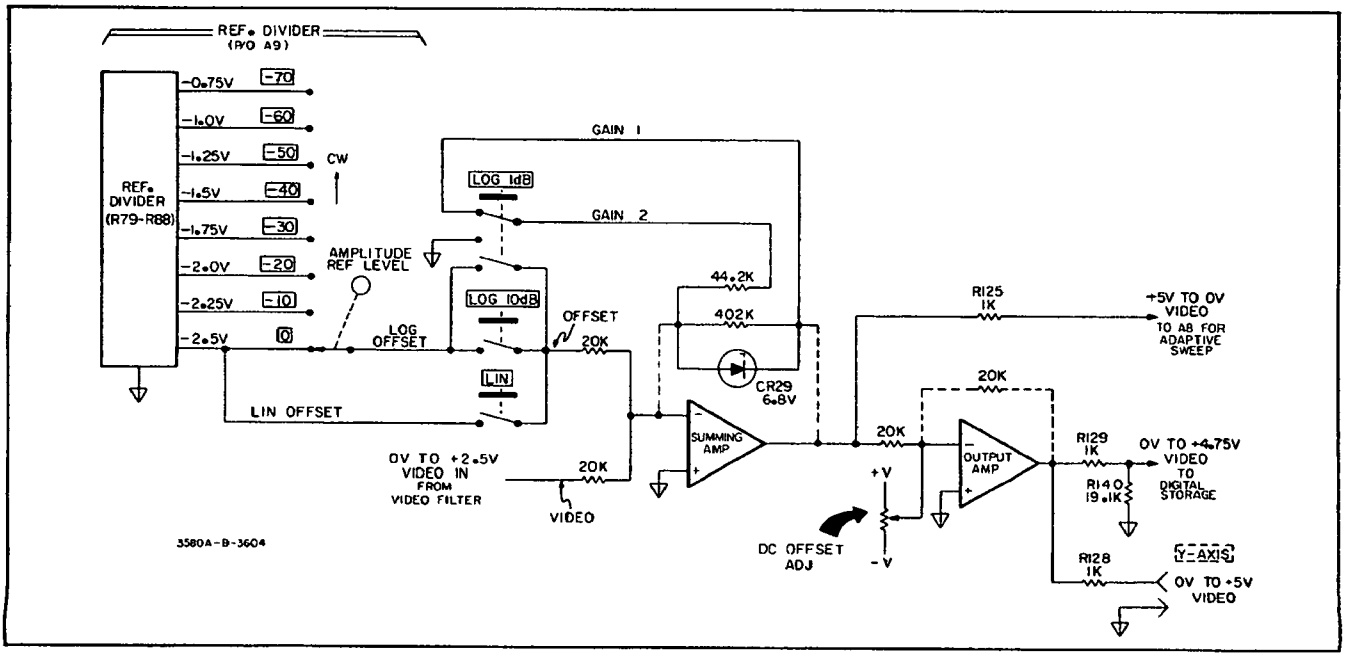


**Figure 4-9. Video Output.**

**Table 4-2. Video Output Circuits (Log 1 dB Mode).**

| Reference Level | Offset Voltage | Displayed Video Level | Summing Amp Output | Display Range |
|---|---|---|---|---|
| 0 dB | -2.50 V | +2.25 V to +2.50 V | +5 V to 0 V | -10 dB to 0 dB |
| -10 dB | -2.25 V | +2.00 V to +2.25 V | +5 V to 0 V | -20 dB to -10 dB |
| -20 dB | -2.00 V | +1.75 V to +2.00 V | +5 V to 0 V | -30 dB to -20 dB |
| -30 dB | -1.75 V | +1.50 V to +1.75 V | +5 V to 0 V | -40 dB to -30 dB |
| -40 dB | -1.50 V | +1.25 V to +1.50 V | +5 V to 0 V | -50 dB to -40 dB |
| -50 dB | -1.25 V | +1.00 V to +1.25 V | +5 V to 0 V | -60 dB to -50 dB |
| -60 dB | -1.00 V | +0.75 V to +1.00 V | +5 V to 0 V | -70 dB to -60 dB |
| -70 dB | -0.75 V | +0.50 V to +0.75 V | +5 V to 0 V | -80 dB to -70 dB |

4-71. At the inverting port of the Output Amplifier, the +5 V dc to 0 V output from the Summing Amplifier is summed with a -5 V dc offset from the wiper of the DC Offset Adj. potentiometer, R11. The gain of the Output Amplifier is X1 and the resulting output ranges from 0 V dc to +5 V dc, full scale. This output is attenuated to +4.75 V dc full scale by R129 and R140 and applied to the Digital Storage section. The 0 V to +5 V output is also applied to the rear panel Y-AXIS output connector.

**4-72. Frequency and Sweep Section.**

4-73. Figure 4-10 is a functional block diagram of the Frequency and Sweep section. Elements shown on the diagram are described in the following paragraphs.

**4-74. Linear Sweep Generator.** Because of its Adaptive Sweep capability, the 3580A Linear Sweep generator is considerably more sophisticated than conventional sweep generators. The primary purpose of the Linear Sweep Generator is to produce a 0 V to +5 V linear ramp which simultaneously sweeps the VTO frequency and the refresh trace on the CRT. In the Adaptive Sweep process, however, it is required to perform a sequence of operations in response to video signals that rise above the baseline threshold set on the CRT display. This sequence or "algorithm" is illustrated and described in Figure 4-11.

4-75. Figure 4-12 is a functional block diagram of the Linear Sweep Generator. The major circuit elements include a Digital Controller, a Programmable Ramp Generator, an End of Sweep Comparator a Ramp Comparator and a Delay Circuit.

*4-76. Digital Controller.* The Digital Controller is a simple algorithmic state-machine (ASM) which provides se-

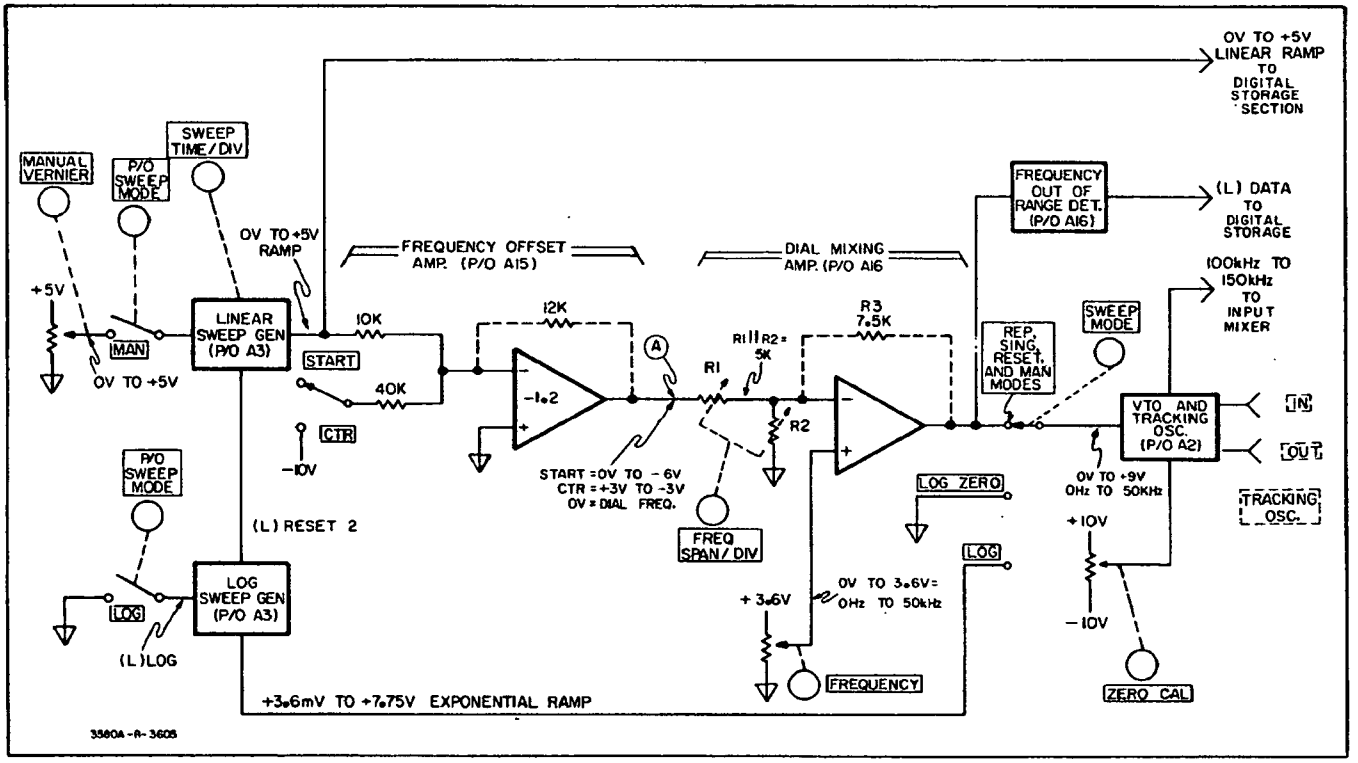


**Figure 4-10. Frequency and Sweep Section.**

quential instructions that control the Adaptive Sweep process. The six input lines shown on the left-hand side of the controller block are qualifiers which determine the "next state" of the controller. The qualifier lines are listed and defined in Table 4-3. The outputs on the right-hand side of the controller block are instructions which are applied to the Ramp Generator and associated circuitry. The functions of the various instruction lines are described in the following paragraphs.

4-77. The Digital Controller is synchronized by a 55 kHz to 70 kHz pulse train applied to the Clock input. The clock signal is generated by an oscillator in the High Voltage Power Supply section. Even though the clock frequency is 55 kHz to 70 kHz, the Digital Controller does not cycle at a 55 kHz to 70 kHz rate. State times are determined strictly by the qualifier inputs and the clock only ensures that the counting elements within the controller are incremented simultaneously. In order for the digital controller to function properly, the clock frequency must be between 55 kHz and 70 kHz.

*4-78. Programmable Ramp Generator.* The Programmable Ramp Generator produces a 0 V to +5 V linear

**Table 4-3. Qualifier Inputs.**

| Qualifier | Description |
|---|---|
| (L)RESET 1 | Line goes low when SWEEP MODE switch is set to RESET, MAN or LOG ZERO and when CLEAR WRITE button is pressed. When this line initially goes low, the Digital controller is asynchronously reset to State Ø. The controller then increments to State 1 and remains in that state until the (L)RESET 1 line goes high. |
| (L)SING | Line goes low when SWEEP MODE switch is set to SINGLE position. |
| (L)RESP | Line goes low when a video response rises above the baseline threshold set on the CRT display. |
| (H)GEW | Line from Digital Storage section goes high to indicate that the display sweep has reset. |
| (H)DLYO | Line from Delay Circuit goes high to indicate that the delay period is over. |
| | **NOTE**<br>*The "L" or "H" preceding each qualifier mneumonic indicates the "Low" or "High" assertion state (true or "1" state) of the qualifier line. In some cases, both states of a qualifier are used in the control sequence. For example, a qualifier might be "Response" (H)NRESP.* |

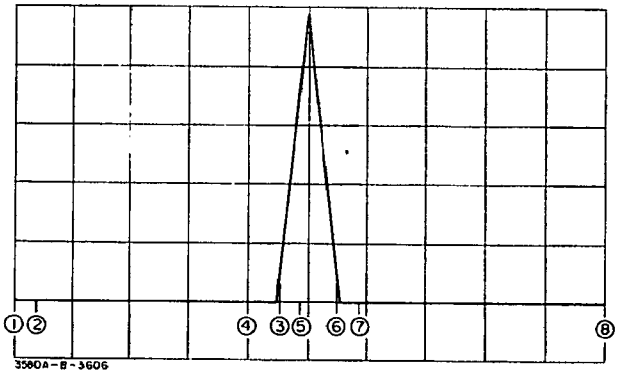


1. STOP SWEEPING AND ALLOW TIME FOR THE IF FILTER TO SETTLE. **SLOW FORWARD** TO POINT 2.
   a. During slow sweeps the sweep time is as indicated by the front panel SWEEP TIME setting.
   b. The instrument initially sweeps slowly to ensure that the zero response (if present) is properly detected.
   c. The distance between Points 1 and 2 is equal to 0.75 times the Step Back distance (see Step 3).
2. IF A RESPONSE IS NOT PRESENT, SWEEP **FAST FORWARD.**
   a. The fast sweep time is 20 to 25 times faster than indicated by the SWEEP TIME setting.
3. RESPONSE DETECTED. SWEEP **FAST BACKWARD** TO POINT 4.
   a. The distance between Points 3 and 4 is called the "Step Back" distance and is determined by the FREQ SPAN and BANDWIDTH settings.
4. STOP SWEEPING AND ALLOW TIME FOR THE IF FILTER TO SETTLE. SWEEP **SLOW FORWARD** TO POINT 5.
   a. The distance between Points 4 and 5 is equal to 1.75 times the Step Back distance.
   b. This step ensures that the instrument sweeps slowly **past** the point it stepped back from initially.
5. CONTINUE TO SWEEP SLOWLY TO POINT 6 WHERE RESPONSE IS NO LONGER DETECTED.
6. SWEEP **SLOW FORWARD** TO POINT 7.
   a. The distance between Points 6 and 7 is equal to 0.75 times the Step Back distance.
   b. This step ensures that the response is completely passed before the sweep rate is increased.
7. IF RESPONSE IS NOT PRESENT, SWEEP **FAST FORWARD** TO POINT 8.
8. END OF SWEEP. RESET TO POINT 1.

**Figure 4-11. Adaptive Sweep Routine.**

ramp voltage in response to sequential instructions from the Digital Controller. The instructions applied to the Ramp Generator are listed and defined in Table 4-4.

*4-79.* End of Sweep Comparator. The EOS Comparator detects when the ramp voltage reaches +5 V and, in turn, produces an End of Sweep (LEOS) command which *asynchronously* resets the Digital Controller to State Ø.

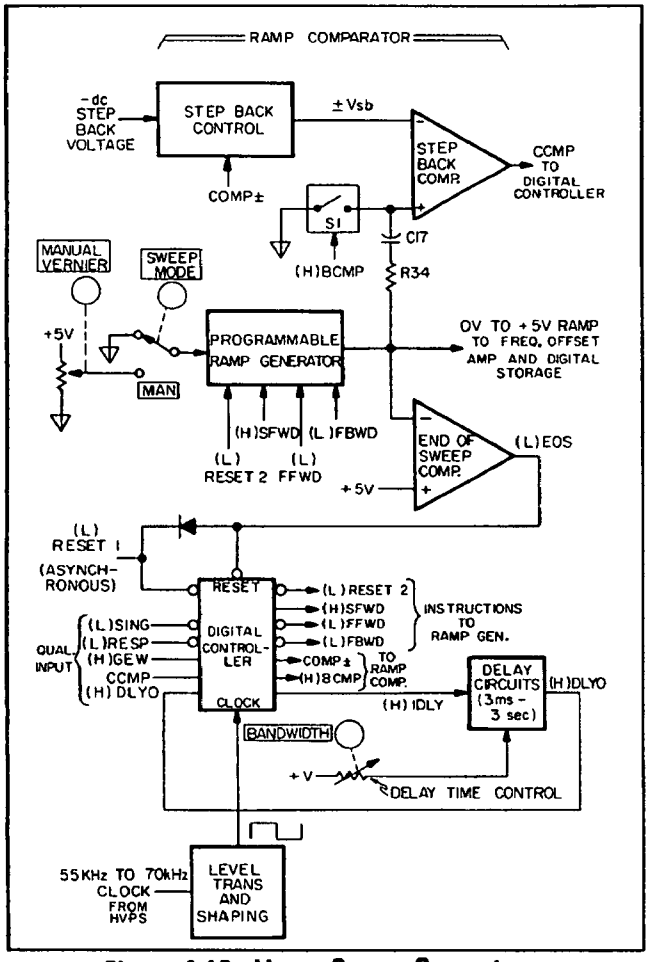


**Figure 4-12. Linear Sweep Generator.**

*4-80. Ramp Comparator.* In the Adaptive Sweep routine, the Ramp Comparator measures the forward and reverse excursions of the ramp voltage and informs the Digital Controller when the Ramp Generator has swept the required distance from a given point. The need for this is illustrated in Figure 4-11. At Point 3, for example, a response is initially detected and the Ramp Generator sweeps backward to Point 4. The controller must be informed when the sweep reaches Point 4 so that it can instruct the Ramp Generator to begin sweeping slow forward. Similarly, when a response is no longer detected at Point 6, the Ramp Generator continues to sweep slow forward to Point 7. The controller must be informed when the sweep reaches point 7 so that it can instruct the Ramp Generator to begin sweeping fast.

4-81. The Ramp Comparator consists of a Step Back Control circuit and a Step Back Comparator. Both of these elements operate in response to instructions from the Digital Controller.

**Table 4-4. Ramp Generator Instructions.**

| INSTR | Description |
|---|---|
| (L)RESET 2 | In the Single and Repetitive sweep modes, the (L)RESET 2 instruction resets the Ramp Generator. When the Ramp Generator is reset, its output is 0 V. In the Manual sweep mode, the (L)RESET 2 instruction is given continuously. The Ramp Generator then functions as a X1 amplifier and receives its input from the MANUAL VERNIER potentiometer. |
| (H)SFWD | When the (H)SFWD (Slow Forward) instruction is given, the Ramp Generator sweeps in a positive direction from 0 V to +5 V. The sweep time is as indicated by the SWEEP TIME setting. |
| (L)FFWD | When the (L)FFWD (Fast Forward) instruction is given, the Ramp Generator sweeps in a positive direction at 20 to 25 times the panel-selected rate. |
| (H)FBWD | When the (H)FBWD (Fast Backward) instruction is given, the Ramp Generator sweeps in a negative direction (+5 V to 0 V) at 20 to 25 times the panel-selected rate. |

4-82. The Step Back Control circuit is a "programmable inverter" which receives a negative dc input voltage and provides an inverted or non-inverted output, depending on the state of the COMP instruction line. The negative dc "step-back voltage" applied to the Step Back Control circuit is controlled by the FREQ SPAN and BANDWIDTH settings. The magnitude of this voltage determines the "step-back distance" described in Figure 4-11. As the frequency span is narrowed or bandwidth is widened, the magnitude of the step back voltage increases causing the step back distance to increase. When the COMP instruction line is *high,* the instruction is COMP (-). This means that the output of the Step Back Control circuit is a negative dc voltage that is equal in magnitude to the applied step-back voltage. When the COMP instruction line is *low,* the instruction is COMP (+). When the COMP (+) instruction is given, the output polarity is changed from negative to positive and the magnitude of the voltage is decreased to 0.75 times the applied step-back voltage. For example, if the applied step-back voltage is -1 V dc and the instruction is COMP (-), the output of the Step Back Control circuit is -1 V dc. If the instruction is changed to COMP (+), the output changes to +0.75 V dc.

4-83. The Step Back Comparator is a high impedance differential amplifier circuit controlled by the (H)BCMP (Begin Comparison) instruction line from the Digital Controller. When the Begin Comparison instruction is *not* given (BCMP line low), switch S1 is closed and the non-inverting (+) port of the comparator is grounded. Capacitor C17 then charges to the ramp voltage through R34. When the Begin Comparison in-

struction is given, switch S1 opens and the instantaneous ramp voltage is retained by C17. With S1 open, the polarity of the charge on C17 is such that C17 serves as a bucking supply. Thus, as the Ramp Generator sweeps forward or backward from the point at which S1 opens, only the *change in voltage* is felt at the non-inverting port of the comparator. If, for example, the BCMP instruction is given when the ramp voltage is + 4 V and the ramp voltage then decreases to + 3 V, the voltage at the non-inverting port is -1 V. When the voltage at the non-inverting port slightly exceeds the positive or negative step-back voltage at the inverting port, the output of the comparator changes states and the CCMP (Comparison Complete) qualifier is met. This indicates to the Digital Controller that the Ramp Generator has swept the required distance from the point at which the comparison began.

4-84. In the Adaptive Sweep routine, the COMP (-) and BCMP instructions are given when the Ramp Generator begins sweeping backward. At the time the BCMP instruction is given, the output of the Step Back Comparator is *high*. As the ramp voltage decreases, the voltage at the non-inverting intput becomes increasingly negative until it slightly exceeds the negative step-back voltage at the inverting port. The output of the comparator then goes *low* and the CCMP qualifier is met. The COMP (+) and BCMP instructions are given when the Ramp Generator is sweeping forward. In this case, the output of the comparator is *low* when the BCMP instruction is given. As the ramp voltage increases, the voltage at the non-inverting port becomes increasingly positive until it slightly exceeds the positive step-back voltage at the inverting port. At the time, the output of the comparator goes *high* and the CCMP qualifier is met.

*4-85. Delay Circuit.* The Delay Circuit is a monostable multivibrator which provides a 3 ms to 3 sec. delay period in response to the Initiate Delay (IDLY) instruction from the Digital Controller. At the end of the delay period, the Delay Circuit produces a "delay over" flag (DLYO) which serves as a qualifier input to the Digital Controller.

4-86. The purpose of the 3 ms to 3 sec. delay period is to allow time for the IF Filter to settle between fast and slow sweeps in the Adaptive Sweep routine. The delay period is determined by the BANDWIDTH setting. As the bandwidth is narrowed, the response time of the IF Filter increases and a longer delay period is required.

**4-87. Control Sequence.** Figure 4-13 is an ASM Chart showing the control sequence for the 8-state Adaptive

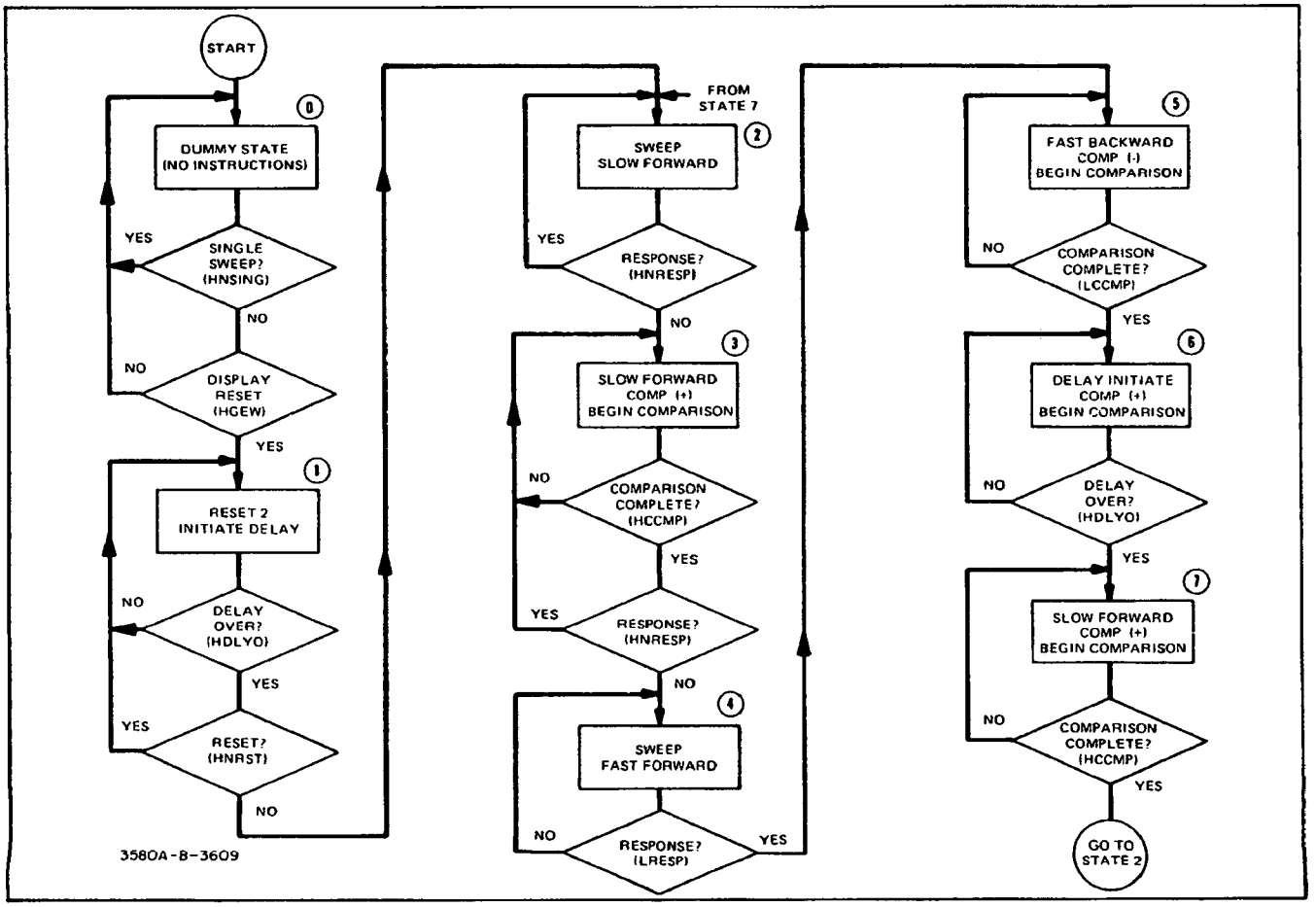


**Figure 4-13. ASM Chart (Adaptive Sweep).**

Sweep routine. Each state of the Digital Controller is represented by a rectangular Instruction Block followed by one or two trapezoidal-shpaed Qualifier Blocks. Items listed in the Instruction Block of a given state indicate the instruction(s) given by the controller in that state. Items in the Qualifier Blocks of a given state indicate the qualifiers that must be met before the controller can increment of the next state.

4-88. The routine begins with the Digital Controller asynchronously reset the State Ø by an End of Sweep (LEOS) command. The EOS command is momentary and does not prevent the controller from incrementing to the next state. State Ø is a "dummy" state where no instructions are given. The two qualifiers in this state are HNSING (Not Single) and HGEW. The HNSING qualifier is met when the SWEEP MODE switch is *not* in the SING position. When the Single sweep mode is selected, the controller remains in State Ø following the End of Sweep command. The HGEW qualifier is met when the display sweep in the Digital Storage section resets.

4-89. In State 1, the (L) Reset 2 instruction is given to reset the Ramp Generator. At the same time, a delay is initiated to allow the IF Filter to settle. When the delay period is over (DLYO qualifier met) the controller increments to State 2. If the SWEEP MODE switch is in the RESET, MAN or LOG ZERO position, the (L) Reset 1 line is low causing the controller to remain in State 1.

4-90. In State 2, the Ramp Generator starts sweeping SLOW FORWARD. The sweep starts out slowly to ensure that any signals on or near the start frequency will be properly detected. If a response is not present or when the initial response is no longer detected, the HNRESP qualifier is met and the controller increments to State 3.

4-91. In State 3, the Ramp Generator continues to sweep SLOW FORWARD. At this time, the COMP (+) and BCMP instructions are given and the Ramp Generator must sweep slow forward until the CCMP qualifier is met. If, for some reason, a response is setected in State 3, the controller will not increment to State 4 until the reponse is passed (HNRESP qualifier met).

4-92. In State 4, the Ramp Generator sweeps FAST FORWARD until a response is detected. When a response is detected (LRESP qualifier met), the controller increments to State 5.

4-93. In State 5, the COMP (-) and BCMP instructions are given and the Ramp Generator sweeps FAST BACKWARD until the CCMP qualifier is met. The CCMP qualifier is met when the ramp voltage decreases by an amount equal to the step-back voltage.

4-94. In State 6, a delay is initiated and the Ramp Generator stops sweeping until the DLYO qualifier is met. The controller then increments to State 7.

4-95. In State 7, the Ramp Generator sweeps SLOW FORWARD until the CCMP qualifier is met. The controller then recycles to State 2. Note that the Begin Comparison instruction initiated in State 5 is sustained in States 6 and 7. This means that the ramp voltage stored in State 5 (response initially detected) is still the reference in State 7. Since, in State 7, the instruction applied to the Step Back Control circuit is COMP (+), the Ramp Generator must sweep slow foward *past* the point it stepped back from initially. (See Steps 3, 4 and 5 of Figure 4-11.)

*4-96. Non-Adaptive Sweep.* When the ADAPTIVE SWEEP control is in the OFF position, the (L)RESP qualifier line is pulled low to simulate a response. As in the Adaptive Sweep routine, the Digital Controller is initially reset to State Ø and is incremented to States 1 and 2. In State 2, however, the (H)NRESP (No response) qualifier is never met and the controller is forced to remain in that state until it is again reset. When the controller is in State 2, the (H)SFWD (Slow Forward) instruction is given and the Ramp Generator sweeps at the rate indicated by the SWEEP TIME setting.

*4-97. Manual Sweep.* When the Manual sweep mode is selected, the (L)RESET 1 line is pulled low causing the Digital Controller to remain in State 1. The (L)RESET 2 instruction given in State 1 converts the Ramp Generator into a X1 amplifier. The 0 V to + 5 V dc level from the wiper of the MANUAL VERNIER potentiometer is then present at the output of the Ramp Generator. This dc level determines the VTO frequency and the position of the refresh trace on the CRT.

**4-98. Frequency Offset Amplifier.** The 0 V to +5 V ramp from the Linear Sweep Generator is applied to the inverting port of the frequency Offset Amplifier. The gain of the amplifier is -1.2 and, with the START/CTR switch in the START position, the ramp voltage at the output ranges from 0 V to -6 V. With the START/CTR switch set to the CTR (Center) position, a negative dc offset is summed with the ramp voltage at the inverting port. The ramp voltage at the output then ranges from +3 V to -3 V.

**4-99. Dial Mixing Amplifier.** The output of the Frequency Offset Amplifier is applied to the inverting port of the Dial Mixing Amplifier through a resistive attenuator network (R1, R2) controlled by the FREQ SPAN switch. As the frequency span is narrowed, the attenuation increases and the effective gain of the amplifier (with respect to Point A) decreases. Table 4-5 lists the Dial Mixing Amplifier gain and resulting ramp output levels for each FREQ SPAN setting. Output levels listed in the table are measured with an input ramp of 0 V to -6 V and with the non-inverting port of the amplifier at 0 V.

**Table 4-5. Dial Mixing Amplifier Gain.**

| Freq Span/Div | Overall Span | Mixing Amp Gain (From Point A) | Output Ramp |
|---|---|---|---|
| 5 kHz | 50 kHz | -1.5 | 0 V to +9 V |
| 2 kHz | 20 kHz | -0.6 | 0 V to +3.6 V |
| 1 kHz | 10 kHz | -0.3 | 0 V to +1.8 V |
| 0.5 kHz | 5 kHz | -0.15 | 0 V to +0.9 V |
| 0.2 kHz | 2 kHz | -0.06 | 0 V to +0.36 V |
| 0.1 kHz | 1 kHz | -0.03 | 0 V to +0.18 V |
| 50 Hz | 500 Hz | -0.015 | 0 V to +0.09 V |
| 20 Hz | 200 Hz | -0.006 | 0 V to +36 mV |
| 10 Hz | 100 Hz | -0.003 | 0 V to +18 mV |

4-100. A 0 V to +3 V dc control voltage from the front panel FREQUENCY potentiometer is applied to the non-inverting port of the Dial Mixing Amplifier. The gain at the non-inverting port is determined by the parallel resistance of R1 and R2 and by the feedback resistance, R3. The values of R1 and R2 are such that their parallel resistance is always 5 K. The fixed gain at the non-inverting port is therefore:

$$1 + \frac{7.5\ K}{5\ K} = +2.5$$

With the ramp input at 0 V the output of the Dial Mixing Amplifier varies from 0 V to +9 V as the FREQUENCY control is rotated from 0 Hz to 50 kHz. This tunes the analyzer over its entire frequency range. *Anytime the ramp at the inverting port is at 0 V, the analyzer frequency is as indicated on the FREQUENCY display.*

4-101. The following examples illustrate how the ramp and frequency-dial inputs are combined at the output of the Dial Mixing Amplifier to produce the required frequency sweep.

Example: 1

FREQUENCY SPAN.....5K/DIV
START/CENTER.....START
GAIN (Point A).....-1.5
RAMP VOLTAGE (Point A).....0 V to -6 V
RAMP CONTRIBUTION
TO OUTPUT.....0 V to +9 V
FREQUENCY DISPLAY.....0 Hz
DISPLAY CONTRIBUTION TO OUTPUT0 V
OUTPUT RAMP.....0 V to +9 V
FREQUENCY SWEEP.....0 Hz to 50 kHz

Example 2:

FREQUENCY SPAN.....5K/DIV
START/CENTER.....CENTER
GAIN (Point A).....-1.5
RAMP VOLTAGE (Point A).....+3 V to -3 V
RAMP CONTRIBUTION
TO OUTPUT.....-4.5 V to +4.5 V
FREQUENCY DISPLAY.....25 kHz
DISPLAY CONTRIBUTION
TO OUTPUT.....+4.5 V
OUTPUT RAMP.....0 V to +9 V
FREQUENCY SWEEP.....0 Hz to 50 kHz

Example 3:

FREQUENCY SPAN.....5K/DIV
START/CENTER.....START
GAIN (Point A).....-1.5
RAMP VOLTAGE (Point A).....0 V to -6 V
RAMP CONTRIBUTION
TO OUTPUT.....0 V to +9 V
FREQUENCY DISPLAY.....5 kHz
DISPLAY CONTRIBUTION
TO OUTPUT.....+0.45 V
OUTPUT RAMP.....+0.45 V to +9.45 V*
FREQUENCY SWEEP.....5 kHz > 50 kHz

*Out of Range

**4-102. Out of Range Detector.** As illustrated in Example 3, certain combinations of FREQUENCY and FREQ SPAN settings cause the voltage at the output of the Dial Mixing Amplifier to go below the 0 V (0 Hz) lower limit or above the +9 V (50 kHz) upper limit. When either limit is exceeded, the VTO frequency is driven out of range. This could cause erroneous responses to appear on the display. The Frequency Out-of-Range Detector senses when the Dial Mixing Amplifier output is more negative than 0 V or more positive than +9 V and, in turn, generates an (L)Data flag which is applied to the Digital Storage section. In the Digital Storage section, the (L) Data flag clears the memory locations where the frequency is out of range. As a result, a clean baseline appears on the display (Figure 4-14).

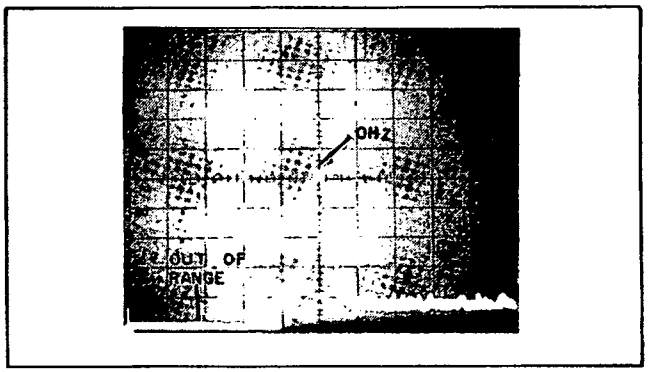


**Figure 4-14. Frequency Out of Range.**

**4-103. VTO and Tracking Oscillator.** Refer to Figure 4-15 for the following discussion.

4-104. The 0 V to +9 V ramp from the Dial Mixing Amplifier is applied to the VTO and to the inverting port of the VTO Error Amplifier. At the inverting port of the Error Amplifier, the ramp voltage is summed

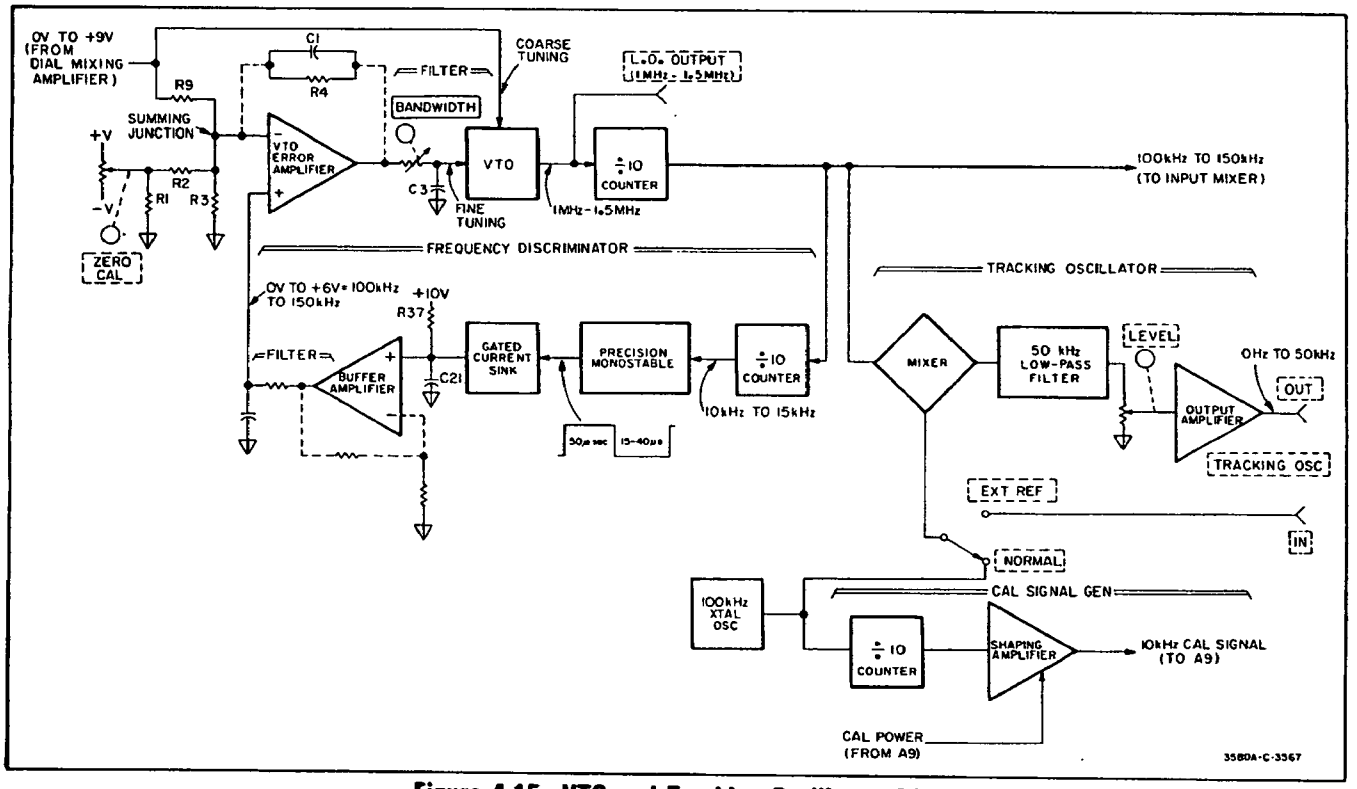


**Figure 4-15. VTO and Tracking Oscillator (A5).**

with a dc voltage from the front panel ZERO CAL potentiometer. The sum of the two voltages serves as a reference for the frequency control loop.

*4-105. The VTO.* The VTO is a conventional oscillator circuit that is tuned by changing the dc bias on two varactor diodes which are the capacitive elements in the LC tank circuit. The 0 V to + 9 V ramp coarse tunes the VTO frequency from 1 MHz to 1.5 MHz. Fine tuning is provided by the error voltage from the VTO Error Amplifier. The output of the VTO is applied to a Divide-By-Ten Counter and to the rear panel L.O. OUTPUT connector. The output of the Divide-By-Ten Counter is a 100 kHz to 150 kHz square wave which is applied to the Input Mixer (A9) and to the Frequency Discriminator and Tracking Oscillator.

*4-106. Frequency Discriminator.* Due to the inherent non-linearity of the VTO, an external frequency control loop is required. The frequency control loop is comprised of a Frequency Discriminator and VTO Error Amplifier. The Frequency Discriminator produces a dc voltage that is linearly proportional to the VTO output frequency. This dc voltage is applied to the non-inverting port of the VTO Error Amplifier where it is compared to the reference voltage at the inverting port. Any difference between these two voltages causes the output of the Error Amplifier to increase or decrease to correct the VTO frequency.

4-107. The 100 kHz to 150 kHz VTO output signal is applied to a Divide-By-Ten Counter in the Frequency Discriminator. The output of the Divide-By-Ten Counter is a 10 kHz to 15 kHz square wave which positive-edge triggers the Precision Monostable Multivibrator. When triggered, the output of the Monostable Multivibrator goes high for exactly 50 $\mu$sec This gates off the Current Sink allowing C21 to charge toward + 10 V through R37. At the end of the 50 $\mu$sec charge period, the Current Sink is gated on causing C21 to discharge at a fixed rate. As the VTO frequency increases, the charge period of C21 remains at 50 $\mu$sec but the discharge period becomes shorter. As a result, the average charge on C21 increases. The voltage across C21 is amplified, filtered and applied to the non-inverting port of the VTO Error Amplifier. This voltage varies from 0 V to + 6 V as the VTO frequency is tuned from 100 kHz to 150 kHz.

*4-108. Precision Monostable Multivibrator.* The magnitude of the dc voltage at the output of the Frequency Discriminator is determined by the duty cycle of the pulse generated by the Precision Monostable Multivibrator. In order for the output voltage to increase linearly with frequency, the width of the positive half cycle of the pulse must be constant reguardless of frequency and the width of the negative half cycle must vary linearily with frequency. This requires precise timing and a high degree of stability not obtainable with conventional R/C-coupled "one-shot" multivibrators.

4-109. Figure 4-16 is a simplified block diagram of the Precision Monostable Multivibrator. In the reset state, the following conditions exist:

a. The "Q" output of the J-K Flip-Flop is low causing Q13 to cut off. Capacitor C27 then charges to + 10 V through R54.

b. The "$\overline{Q}$" output of the J-K Flip-Flop is high. This resets the 14-Pulse Counter to State Ø.

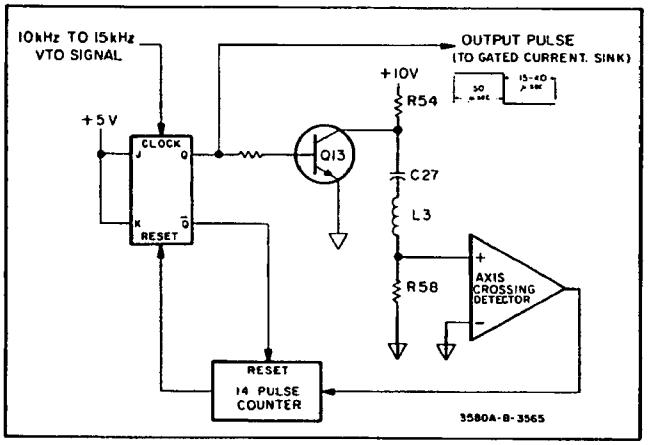


**Figure 4-16. Precision Monostable.**

4-110. The J-K Flip-Flop is clocked by the zero crossing during a low-to-high transition of the VTO input signal. When the Flip-Flop is clocked, the "Q" output goes high, Q13 is gated on and the junction of C27 and R54 is grounded. A series-resonant tank circuit is then formed by C27, L3 and R58. As C27 discharges, the lightly damped tank circuit rings at its resonant frequency (approximately 230 kHz). The 230 kHz signal developed across R58 is squared-up by the Axis Crossing Detector and applied to the 14-Pulse Counter. The 14-Pulse Counter counts 14 pulses and then resets the J-K Flip-Flop to terminate the output pulse.

*4-111. Tracking Oscillator.* In the Tracking Oscillator section, the 100 kHz to 150 kHz output from the VTO is mixed with a 100 kHz signal from a Crystal Oscillator or with an external signal applied to the TRACKING OSC IN connector. The difference frequency at the output of the Mixer is fed through a 50 kHz Low-Pass Filter, amplified and applied to the rear panel TRACKING OSC OUT connector. With the rear panel switch in the NORMAL position, the signal at the Tracking Oscillator Output is a 0 Hz to 50 kHz sinewave which tracks the tuned frequency of the instrument. The amplitude of the signal can be varied from 0 V to 1 V rms by adjusting the rear panel LEVEL control.

*4-112. Cal. Signal Generation.* The 100 kHz output of the Crystal Oscillator is applied to a Divide-By-Ten Counter. The output of the counter is processed and applied to the A9 Input Circuits where it becomes the input signal with the INPUT SENSITIVITY switch set to the CAL position. The calibration signal is a 15/85 duty cycle pulse train which provides a 10 kHz fundamental-frequency component and odd and even harmonic components spaced at 10 kHz intervals. The amplitude of the fundamental-frequency component is such that it produces full-scale deflection when the instrument is properly calibrated. The amplitudes of the harmonic components are not meaningful.

**4-113. Log Sweep Generator.** In the Log Sweep mode, the 0 V to + 5 V linear ramp from the Linear Sweep Generator sweeps the display while a + 3.6 mV to + 7.75 V exponential ramp from the Log Sweep Generator sweeps the VTO frequency. The frequency range of the log sweep is from 20 Hz to 43 kHz. During log sweeps, the SWEEP TIME control is disabled and the Linear Sweep Generator is automatically set for a 5 second sweep time. The Log Sweep Generator is synchronized by the (L)Reset 2 instruction from the Linear Sweep Generator.

4-114. Figure 4-17A shows the basic circuit configuration for the Log Sweep Generator. The major circuit element is a high input-impedance operational amplifier. The gain of the amplifier with respect to Point A is -1 and the gain at the non-inverting port is + 2. At the beginning of the log sweep the following conditions exists:

a. The (L)Reset 2 line is low.

b. FET switch Q32 is closed.

c. The non-inverting port of the amplifier is grounded through Q32.

d. Capacitor C14 is fully discharged.

e. The output voltage is + 3.6 mV dc due to the -3.6 mV dc reference applied to Point A. This sets the analyzer frequency to 20 Hz which is the starting point for the log sweep.

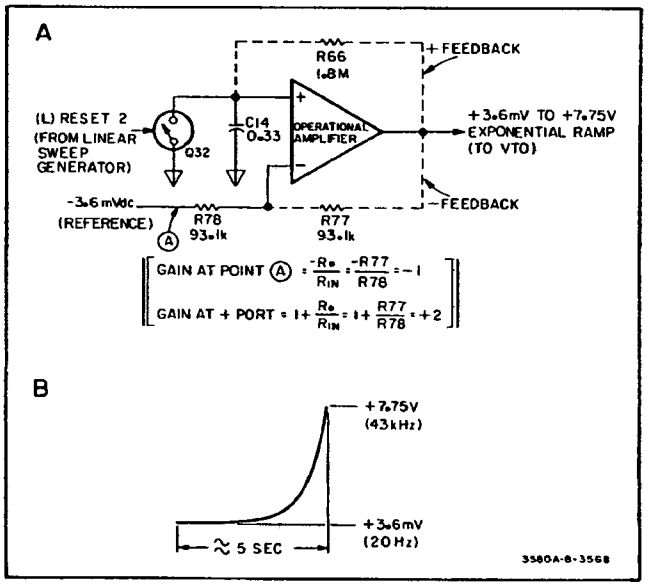


**Figure 4-17. Basic Log Sweep Generator.**

When the (L)Reset 2 instruction is cleared, switch Q32

opens and C14 charges toward the output voltage through feedback resistor R66. As C14 charges, the output voltage becomes increasingly positive. Due to the bootstrapping effect of the positive feedback through R66, the charge rate of C14 increases exponentially. The exponential ramp at the output is as shown in Figure 4-17B.

**4-115. Auto Zero Circuit.** An Auto Zero Circuit is included in the Log Sweep Generator to null out any dc offset introduced by the operational amplifier. The overall circuit configuration is shown in Figure 4-18.

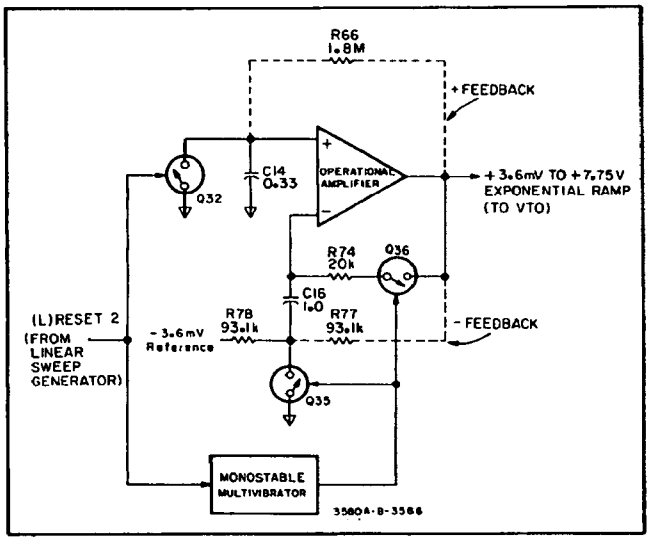


**Figure 4-18. Overall Log Sweep Generator.**

4-116. When the (L)Reset 2 instruction is initially given, the output of the Monostable Multivibrator goes high for approximately 0.4 seconds. This closes FET switches Q35 and Q36. With switch Q32 also closed, the offset voltage is present at the output of the amplifier and capacitor C16 charges to the offset voltage though R74. At the end of the auto zero period, Q35 and Q36 open and the charge on C16, in series with the input reference voltage, cancels the amplifier offset voltage.

## 4-117. Digital Storage and Dispaly Sections.

**4-118. Introduction to Digital Storage.** Low frequency spectrum analyzers require narrow bandwidths and consequently, slow sweep rates. Because of these slow sweep rates, the video cannot be displayed directly on a standard CRT. If, for example, the X and Y axis outputs of the 3580A were applied to a standard CRT, the display would be merely a dot fluctuating up and down while moving slowly across the CRT face. Even with the SWEEP TIME control set to 0.01 SEC/DIV (fastest sweep time), a satisfactory display could not be obtained.

4-119. To retain the slowly scanned video information of the 3580A, some form of display storage is required. As indicated in the Simplified Block Diagram Description (Paragraph 4-22), a storage CRT having long persistance could be used. Recent advances in large-scale integrated circuits and the innovative design efforts of -hp- engineers, however, have made it possible to use a digital storage technique in the 3580A. The major advantages of digital storage are:

a. Digital storage permits the use of a standard oscilloscope CRT. Standard CRT's are rugged (a must for portable operation) and relatively inexpensive to replace.

b. A digitally stored trace can be retained indefinitely . . . as long as the instrument is turned on. If a single sweep is made, the trace that is generated will continue to be displayed until it is cleared or updated by a new sweep.

c. If a trace is needed for future reference, it can be permanently stored in memory by pressing the STORE button. The permanently stored trace and a current or "refresh" trace can be then displayed simultaneously.

d. Display adjustments are not required when the sweep parameters are changed. The digitally stored trace is automatically cleared and updated at the correct rate. The INTENSITY and FOCUS controls have the same effect as those of a regular oscilloscope. Once they are set, they do not need to be readjusted.

e. Digital storage provides a bright, crisp flicker-free presentation. There is no blooming or display ambiguity.

**4-120. How a Trace is Stored.** Refer to Figure 4-19 for the following discussion.

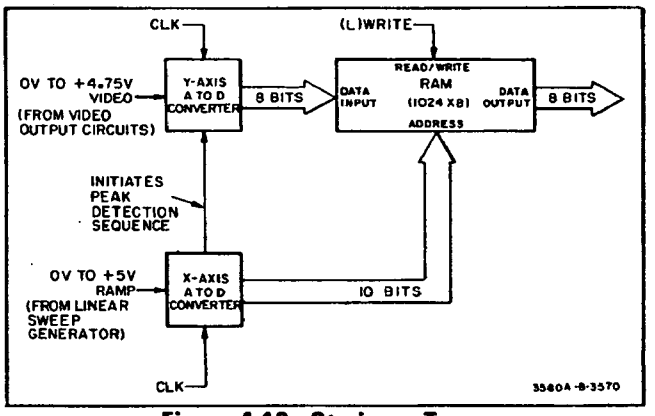


**Figure 4-19. Storing a Trace.**

*4-121. The Digital Memory.* The heart of the Digital Storage Section is a Ramdom Access Memory (RAM) comprised of eight 1024 X 1-bit static, MOS memory elements. The RAM has 1024 storage locations or "addresses" (Ø thru 1023). The addresses are selected by a 10-bit binary code applied to the Address lines. Each address is capable of storing an 8-bit binary word applied to the Data Input lines. The input/output function of the RAM is determined by the state of the Read/Write

control line. When the Read/Write line is low, the 8-bit word present on the Data Input lines is stored or "written" in the memory location selected by the Address lines. When the Read/Write line is high, the 8-bit word stored in the selected address is present on the Data Output lines. In this state, data is non-destructively "read" out of memory.

*4-122. X and Y Inputs.* The two major inputs to the Digital Storage section are the 0 V to + 5 V frequency ramp from the Linear Sweep Generator and the 0 V to + 4.75 V video signal from the Video Output Circuits. The magnitude of the ramp voltage at any given time represents a specific frequency and the magnitude of the video signal represents the signal amplitude at the frequency. To store a trace in the Digital Memory, it is first necessary to convert these analog inputs to their corresponding binary codes. This is accomplished by the X-Axis and Y-Axis A to D (Analog to Digital) Converters.

*4-123. X-Axis A to D Converter.* The 0 V to + 5 V frequency ramp is converted to a 10-bit binary code by the X-Axis A to D Converter. This 10-bit binary code is used to address the RAM during the write phase. At the beginning of a frequency sweep, the frequency ramp is at 0 V and the output of the X-Axis A to D Converter is 0000000000, corresponding to RAM address Ø. At the end of the frequency sweep, the ramp is at + 5 V and the output of the X-Axis A to D Converter is 1111111111, corresponding to RAM address 1023. Thus, during each frequency sweep, the X axis is divided into 1024 discreet segments with each segment corresponding to a given RAM address.

*4-124. Y-Axis A to D Converter.* The 0 V to + 4.75 V video input is converted to an 8-bit binary code by the Y-Axis A to D Converter. During each X-Axis segment, this 8-bit word is written into the memory location addressed by the X-Axis A to D Converter. As a result the entire memory is filled and its contents are updated by each frequency sweep. Since each address represents a specific frequency and the 8-bit word stored in a given address represents the video amplitude at the frequency, the memory, in effect, contains a point-by-point plot of the amplitude vs. frequency display.

4-125. With 1024 X-Axis segments, the duration of each segment varies from approximately 100 μsec to 1.9 seconds, depending on the SWEEP TIME setting. Since the frequency is continually changing as the ramp voltage increases, the amplitude of the video signal can vary greatly during a given segment. The amount of variation depends on the magnitude of the random noise riding on the video signal and on the slope of the response being traced. Since only one value can be used to represent the video amplitude during each segment, the peak value, being the most important parameter, is the value that is used. The Y-Axis A to D Converter is designed so that it detects and retains the peak value of the video signal during each X-axis segment. The peak detection sequence is initiated by a signal from the X-Axis A to D Converter.

**4-126. Displaying a Stored Trace.** Refer to Figure 4-20 for the following discussion.

4-127. To obtain a flicker-free stored presentation of the CRT, the memory must be read and the display must be swept at a much faster rate than that of the frequency ramp used for storing data. This rapid scan rate is provided by the Address Counter and Display Ramp Generator.

*4-128. Address Counter.* During the "read" phase, the X-Axis A to D Converter is disconnected and the Address lines of the RAM are switched to the Address Counter. (The switching operation is performed by a

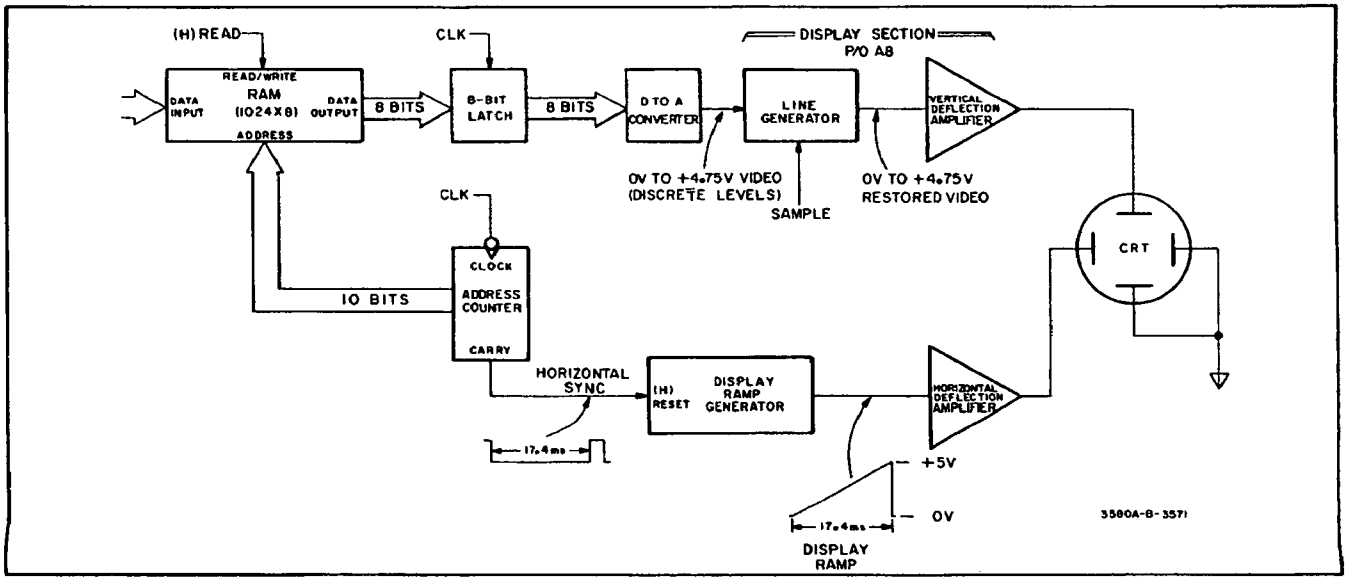


**Figure 4-20. Displaying a Stored Trace.**

10-bit multiplexer described in following paragraphs.) The Address Counter is a 10-bit binary counter that is incremented at approximately 17 μsec intervals. The counter continually cycles from state Ø (0000000000) to state 1023 (1111111111) and then resets to state Ø. As a result, the entire memory is read in periods of approximately 17.4 msec. When the Counter reaches state 1022, its "Carry" output goes high to reset the Display Ramp Generator.

*4-129. Display Ramp Generator.* The Display Ramp Generator, synchronized by the Address Counter, generates a 0 V to + 5 V linear ramp which provides the horizontal sweep for the CRT display. The duration of each sweep is approximately 17.4 msec, corresponding to 1022 increments of the Address Counter. The display sweep is initiated when the Address Counter resets to state Ø and is terminated when the counter reaches state 1022. Addresses 1022 and 1023, are therefore, not displayed.

*4-130. 8-Bit Latch.* During each increment of the Address Counter, the 8-bit latch. The 8-bit word is retained by the Latch until the Address Counter is again incremented.

*4-131. D to A Converter.* The D to A (Digital to Analog) Converter contains a buffered resistive ladder network which converts the 8-bit word at the output of the Latch to its corresponding dc level. The output of the D to A Converter, ranging dc level. The output of the D to A Converter, ranging from 0 V to + 4.75 V full scale, is applied to the vertical deflection plates of the CRT through the Line Generator and Vertical Deflection Amplifier.

*4-132. Line Generator.* The output of the D to A Converter is a series of discrete levels which, if applied to the CRT, would produce a display of dots. The Line Generator produces a variable slope ramp which draws lines between the dots to provide a fully reconstructed display.

**4-133. The Overall System.** During each frequency sweep, the memory contents must be updated by the frequency ramp while the trace currently in memory is being displayed. Since the read and write operations cannot be performed simultaneously, the Address lines of the RAM are rapidly switched between the X-Axis A to D Converter and the Address Counter. Figure 4-21 is a block diagram showing the overall system. Two elements not previously described are the Clock Generator and the Address Multiplexer.

*4-134. Clock Generator.* The Clock Generator, Driven by a signal from the High Voltage Power Supply, produces ten clock outputs which synchronize the various operations of the system. The frequency of the signal applied to the Clock Generator varies from instrument to instrument and can be anywhere within the range of 55 kHz to 65 kHz. In the following discussion, the input frequency is considered to be 60 kHz which provides a base time period of about 17 μsec.

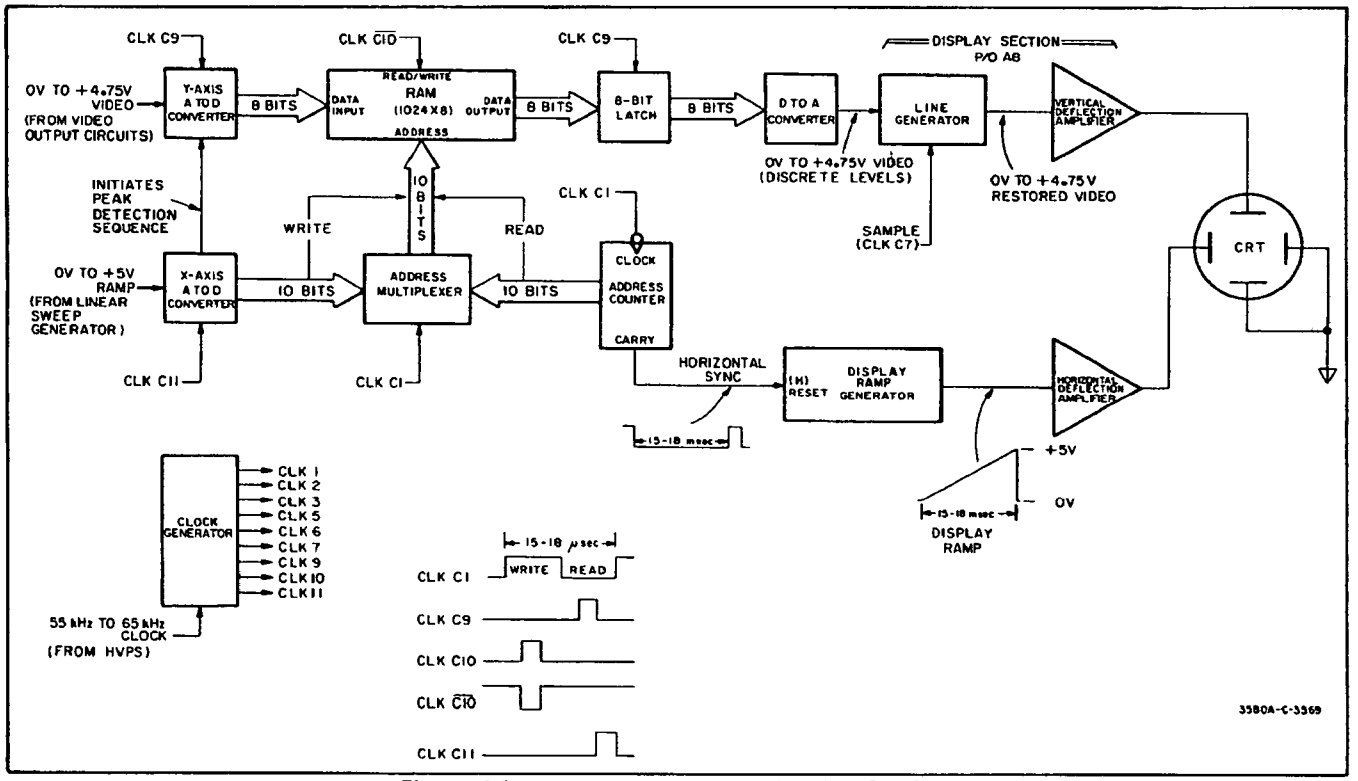


**Figure 4-21. Digital Storage and Display Sections.**

4-135. There are four clocks that are of particular significance in the following discussion. These are: C1, C9, C10 and $\overline{C10}$. The relationship between these clocks is shown on the block diagram. Clock C11 which synchronizes the X-Axis A to D Converter is also shown.

*4-136. Address Multiplexer.* The 10-bit Address Multiplexer switches the RAM Address lines between the X-Axis A to D Converter and the Address Counter. The switching input to the Multiplexer is Clock C1 which is a 60 kHz square wave. The positive half cycle of C1 is to "write" phase and the negative half cycle is the "read" phase. During the write phase of C1, the RAM is addressed by the X-Axis A to D Converter. During the read phase of C1, the RAM is addressed by the Address Counter.

*4-137. Timing Functions.* Before proceeding with the operational sequence, note the following timing functions:

a. The Address Counter is incremented by the high to low transition that occurs when Clock C1 changes from the write phase to the read phase.

b. Clock C9 goes high during the read phase of C1. When C9 goes high, the 8-bit word present on the RAM Data Output lines is strobed into the Latch.

c. The Read/Write line of the RAM is controlled by Clock $\overline{C10}$ which goes low during the write phase of C1. When $\overline{C10}$ goes low, the 8-bit word from the Y-Axis A to D Converter is written into the RAM address selected by the X-Axis A to D Converter.

d. The A to D Converts are clocked by C9 and C11 during the read phase of C1. This means that their outputs can change *only* during the read phase.

**4-138. Operational Sequence.** For the operational description, the following initial conditions exist:

a. The SWEEP MODE switch is set to SING to provide a single frequency sweep.

b. The SWEEP TIME setting is 0.01 SEC/DIV (fastest sweep time).

c. The ADAPTIVE SWEEP control is set to the OFF position.

d. The CLEAR WRITE button has been pressed to clear the display and initiate a new sweep.

e. Clock C1 is high (write phase)

f. The Address Counter is in state 1023 and will reset to Ø when C1 goes low.

4-139. At the beginning of the frequency sweep, the ramp input to the X-Axis A to D Converter is 0 V and the binary code at its output is Ø (0000000000). During the write phase of C1, the RAM Address lines are switched to the X-Axis A to D Converter and addressØ is selected. When Clock $\overline{C10}$ goes low, the 8-bit word from the Y-Axis A to D Converter is written into address Ø. The 8-bit word represents the video amplitude at the start frequency of the sweep. When Clock C1 goes low, the RAM Address lines are switch to the Address Counter and the Address Counter resets to Ø. At this point, the Display Ramp Generator is reset, the CRT sweep is at the left-hand side of the screen and RAM address Ø is selected by the Address Counter. When Clock C9 goes high, the 8-bit word stored in Address Ø is strobed into the Latch, converted to dc by the D to A Converter and applied to the vertical deflection plates of the CRT. When Clock C1 goes high, the RAM Address Lines are again switched to the X-Axis A to D Converter. With the SWEEP TIME Control set to 0.01 SEC/DIV, it takes approximately 100 μsec for the frequency ramp to increase enough to increment the X-Axis A to D Converter to state 1. In this case, only 17 μsec have elapsed since the beginning of the sweep so the output of the X-Axis A to D Converter is still Ø. When $\overline{C10}$ goes low, the 8-bit word from the Y-Axis A to D Converter is again written into address Ø. This 8-bit word may be the same or may differ from the one previously written into addressØ. Since the Y-Axis A to D Converter detects and retains the peak value of the video signal during each X-Axis segment, the final word written into address Ø will represent the peak amplitude during the first segment. When C1 again goes low, the Address Counter is incremented to state 1 (0000000001) and RAM address 1 is selected. When C9 goes high, the contents of address 1 are strobed into the 8-bit Latch. Since the RAM was cleared at the beginning of the sweep and the X-Axis A to D Converter has not yet incremented to state 1, addresses 1 through 1023 contain all zeros. The output of the D to A Converter is, therefore, 0 V and the CRT trace at this point is at the bottom of the screen.

4-140. As the sequence continues, the Address Counter is incremented at 17 μsec intervals by Clock C1. During each read phase of C1, a new RAM address is selected and a new 8-bit word is strobed into the Latch, converted to dc and applied to the vertical deflection plates of the CRT. As a result, all 1022 addresses are read and the display is swept in approximately 17.4 msec.

4-141. At the end of the first display sweep, the frequency ramp will be about +0.81 V and only the first 174 RAM addresses will be filled. Thus, almost six display sweeps will have been made by the time the RAM is completely filled.

4-142. At the end of the 0.1 second single sweep, the entire memory will be filled and the frequency ramp at the input of the X-AXIS A to D Converter will remain at +5 V. At that time, the output of the X-AXIS A to D Converter will be 1111111111, corresponding to RAM address 1023. During each write phase of C1, an 8-bit

word will be written into address 1023. This is of no consequence because the Address Counter resets the Display Ramp Generator in state 1022 and addresses 1022 and 1023 are not displayed. The Address Counter will continue to cycle, the memory will be read and the display will be swept at a 17.4 msec rate. The trace stored in memory will, therefore, continue to be displayed until it is cleared or updated by a new frequency sweep.

*4-143. Clearing a Trace.* When the CLEAR/WRITE button is pressed, the following things take place:

a. The Y-Axis A to D Converter is held in the reset state and its output is 00000000.

b. The RAM Address lines are switched to the Address Counter during both the read and write phases of C1.

c. As the Address Counter scans the memory, all zeros are written in each address and the entire memory is cleared in 17.4 msec.

**4-144. Store Function.** A major feature of the Digital Storage section is the "Store Function" which allows a trace to be permanently stored in memory for future reference. The permanently stored trace can be blanked from the display and then recalled at any time for comparison with the current or "refresh" trace.

4-145. To permanenty store a trace, the operator presses the front panel STORE button. This initiates a sequence of operations in which the trace currently in memory is processed and reloaded into 512 of the 1024 memory locations. The remaining half of the memory is used for the refresh trace. To display both traces, the display sweep rate is doubled to provide two 8.7 msec sweeps. During the first display sweep, the Address Counter scans the memory locations containing the refresh trace. It then recycles and scans the memory locations containing the permanently stored trace. As a result, the two traces are displayed alternately in a 17.4 msec period.

4-146. Figure 4-22 is an expanded block diagram showing the additional circuitry needed to implement the store function. A 4-state digital controller called the "Store Function Controller" is used to direct the store operation. The ASM chart for the Store Function Controller is shown in Figure 4-23. Other elements used only for the store function are the Store Multiplexer, the 8-Bit Adder and the Write Control circuit.

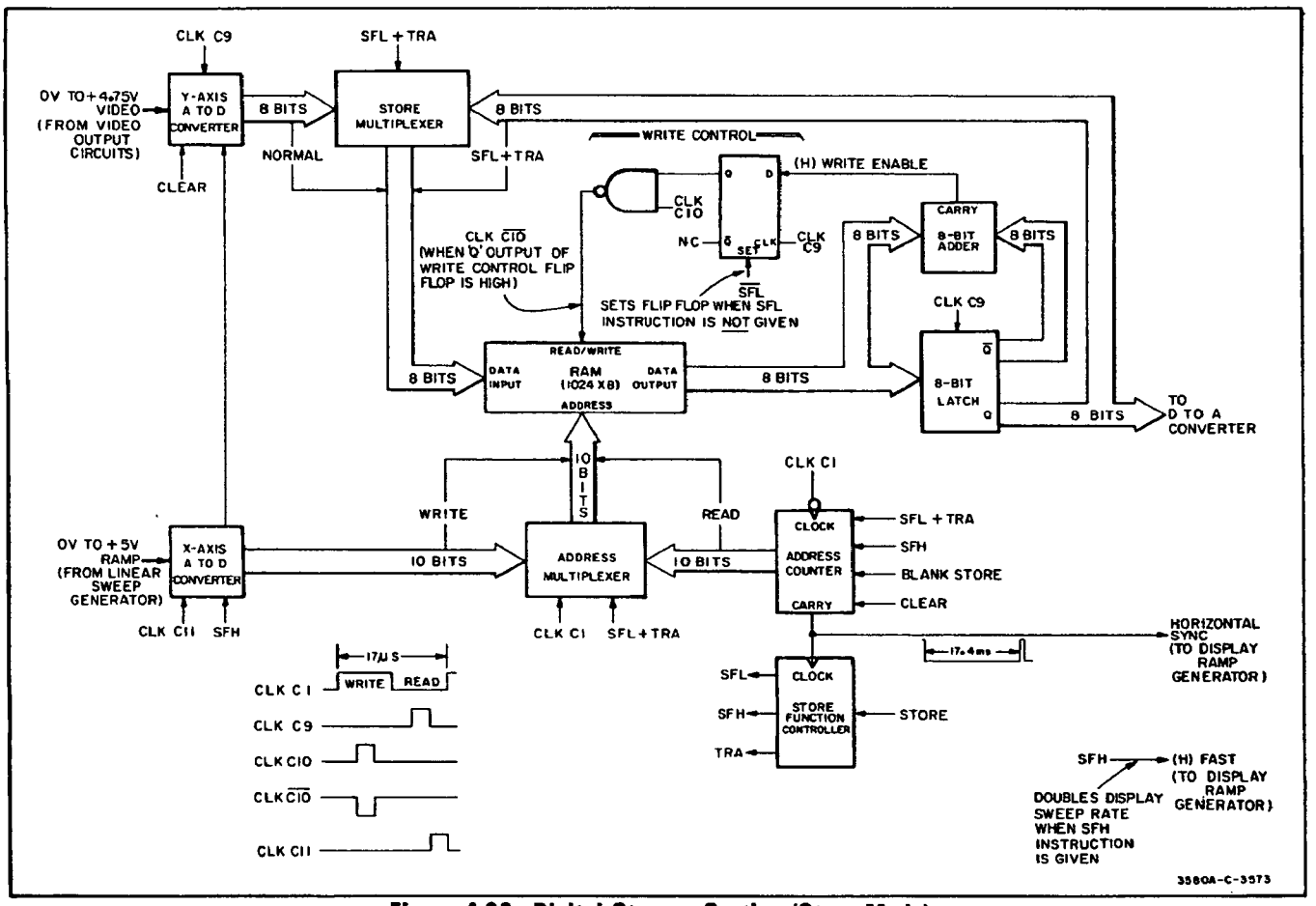


**Figure 4-22. Digital Storage Section (Store Mode).**

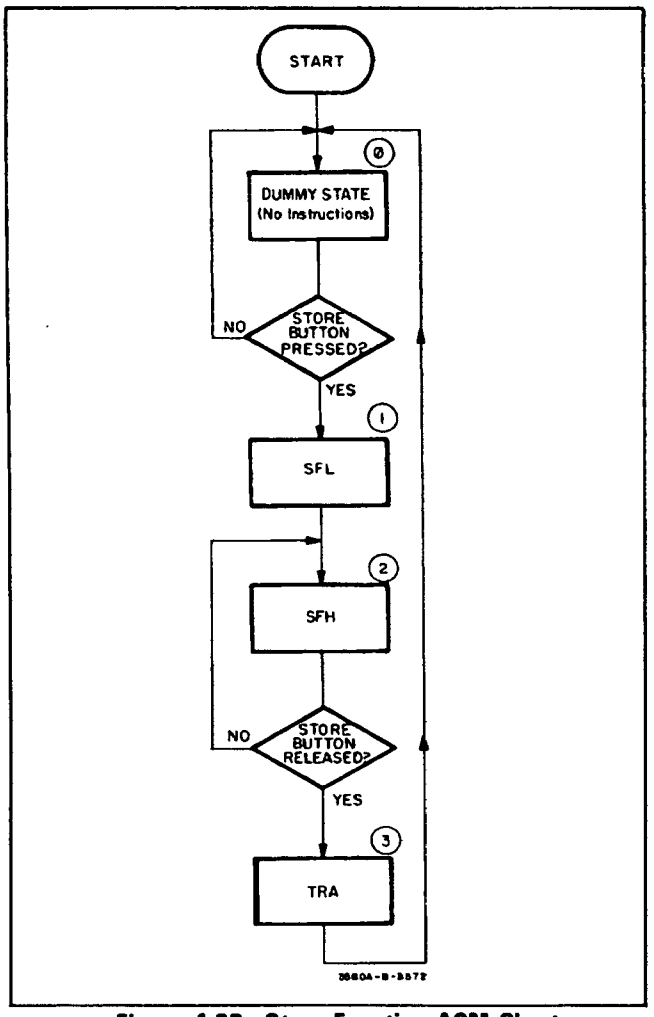


**Figure 4-23. Store Function ASM Chart.**

*4-147. Store Multiplexer.* The Store Multiplexer switches the RAM Data Input lines between the Y-Axis A to D Converter and the "Q" outputs of the 8-Bit Latch. The switching inputs to the Store Multiplexer are the SFL and TRA instructions from the Store Function Controller. During normal operation the SFL and TRA instructions are not given and the RAM Data Input lines are always connected to the Y-Axis A to D Converter. When the SFL or TRA instruction is given during the store sequence, the RAM Data Input lines are switched to the "Q" outputs of the 8-Bit Latch and the Y-Axis A to D Converter is disconnected.

*4-148. 8-Bit Adder.* In State 1 of the store sequence, the Adder is used to compare the 8-bit word on the RAM Data Output lines to the 8-bit word at the output of the Latch. The comparison is made using one's compliment addition i.e., the "Q" outputs of the Latch are the compliments of the "Q" outputs. If the numerical value of the word at the output of the RAM is greater than that of the word at the output of the Latch, the "Carry" output of the Adder goes high, supplying a "Write Enable" command to the Write Control circuit.

*4-149. Write Control Circuit.* During normal operation the "Set" input to the write control flip-flop is high, forcing the "Q" output to be high. Clock $\overline{C10}$ is then present at the output of the NAND gate and data is written into memory during each write phase of Clock C1. When the SFL instruciton is given during State 1 of the store sequence, the "Set" input of the flip-flop is low and the "Q" output goes high only if the Write Enable line from the 8-Bit Adder is high when the flip-flop is clocked by the positive going edge of C9. If a Write Enable command is given, the "Q" output will be high and data will be written into memory by $\overline{C10}$ during the next write phase. If a Write Enable command is not given, the "Q" output of the flip-flop will be low and Clock $\overline{C10}$ will be inhibited during the next write phase.

*4-150. Store Sequence (State 1).* Refer to Figure 4-23. When the STORE button is initially pressed, the Store Function Controller is in State Ø where no instructions are given. It remains in State Ø until the Address Counter completes its current cycle and resets to Ø. The Controller then increments to State 1.

4-151. The purpose of State 1 is to condense the trace currently in memory and store it in the 512 memory locations where the Least Significant Bit (LSB) of the address is a logical "0" (addresses Ø, 2, 4, 6, etc.) To accomplish this, the Address Counter is incremented from state Ø to state 1023. At each increment, the contents of the present address and the preceding address are compared and the larger value is stored in the appropriate memory location. Storing only the larger of the two values ensures that the peak value of each response will be retained in the permanently stored trace.

4-152. In State 1, the Store Function Controller gives the SFL (Sweep Flag) instruction which performs the following functions:

a. Overrides the Clock C1 input to the Address Multiplexer, causing the Multiplexer to remain switched to the Address Counter. The Address lines of the RAM are, therefore, controlled by the Address Counter during both the read and write phases of Clock C1.

b. Forces the LSB of the Address Counter to a logical "0" *during the write phase of Clock C1.* This means that information can only be written into the memory locations where the LSB of the address is a logical "0". The contents of addresses where the LSB is a logical "1" are left unaltered.

c. Switches the Store Multiplexer so that the Data Input lines of the RAM are connected to the "Q" outputs of the 8-Bit Latch. In this state, the Y-Axis A to D Converter is disconnected.

d. Enables the Write Control circuit. During normal operation, the Write Control circuit is disabled and Clock $\overline{C10}$ is present at the output of the NAND gate. With the Write Control circuit enabled, Clock $\overline{C10}$ is inhibited unless a Write Enable command has been generated by the 8-Bit Adder.

4-153. Figure 4-24 shows the equivalent circuit during State 1. Elements not shown can be disregarded.

4-154. The State 1 sequence begins with the following conditions:

a. Clock C1 has just completed the transition from the write phase to the read phase.

b. The Address Counter is in State 1 (0000000001).

c. The 8-bit word from the preceding address (Ø) is at the output of the Latch.

d. The 8-bit word stored in the present address (1) is on the Data Output lines of the RAM.

4-155. Just before Clock C9 goes high, the 8-bit word on the RAM Data Output lines (present address) is compared to the 8-bit word at the output of the Latch (preceding address) by the 8-Bit Adder. If the numerical value of the 8-bit word in the present address is greater than that of the preceding address, the Adder generates a Write Enable command which is applied to the Write Control circuit. If a Write Enable command is generated, data will be written into memory during the next write phase. When Clock C9 goes high, the 8-bit word on the RAM Data Output lines (address 1) is strobed into the Latch.

4-156. When Clock C1 goes into the write phase, the Address Counter remains in State 1 (0000000001) but because its LSB is forced to a logical "0", RAM address Ø (0000000000) is selected. If a Write Enable command was generated during the read phase, the 8-bit word from address 1 (now at the output of the Latch) is written into address Ø. If a Write Enable command was not generated, Clock $\overline{C10}$ is inhibited and the contents of address Ø are left unchanged.

4-157. When Clock C1 again goes into the read phase, the Address Counter is incremented to State 2 (0000000010). At this time, the 8-bit word from address 1 is still at the output of the Latch and the 8-bit word stored in address 2 is on the RAM Data Output lines. If the 8-bit word in address 2 is greater than that of address 1, a Write Enable command will be generated and, during the next write phase of C1, the contents of address 2 will be written back into address 2, leaving address 2 unchanged. Moreover, if the 8-bit word in address 2 is less than that of address 1, a Write Enable command will not be generated and the contents of address 2 will *still be left unchanged.* This is an important point. Even though the 8-bit word in each address is compared to that of the address that is one count higher, only alternate comparisons have any effect. For example, addresses Ø and 1 are compared and the largest value is written into address Ø addresses 1 and 2 are compared and address 2 is left unchanged, addresses 2 and 3 are compared and the largest value is written into address 2, etc.

4-158. The comparison sequence continues until the Address Counter reaches State 1023 and resets. At that time, the Store Function Controller increments to State 2 where it remains until the STORE button is released.

*4-159. State 2.* In State 2, the SFH (Sweep Flag Hold) instruction is given and the system returns to its normal mode of operation with the following exceptions:

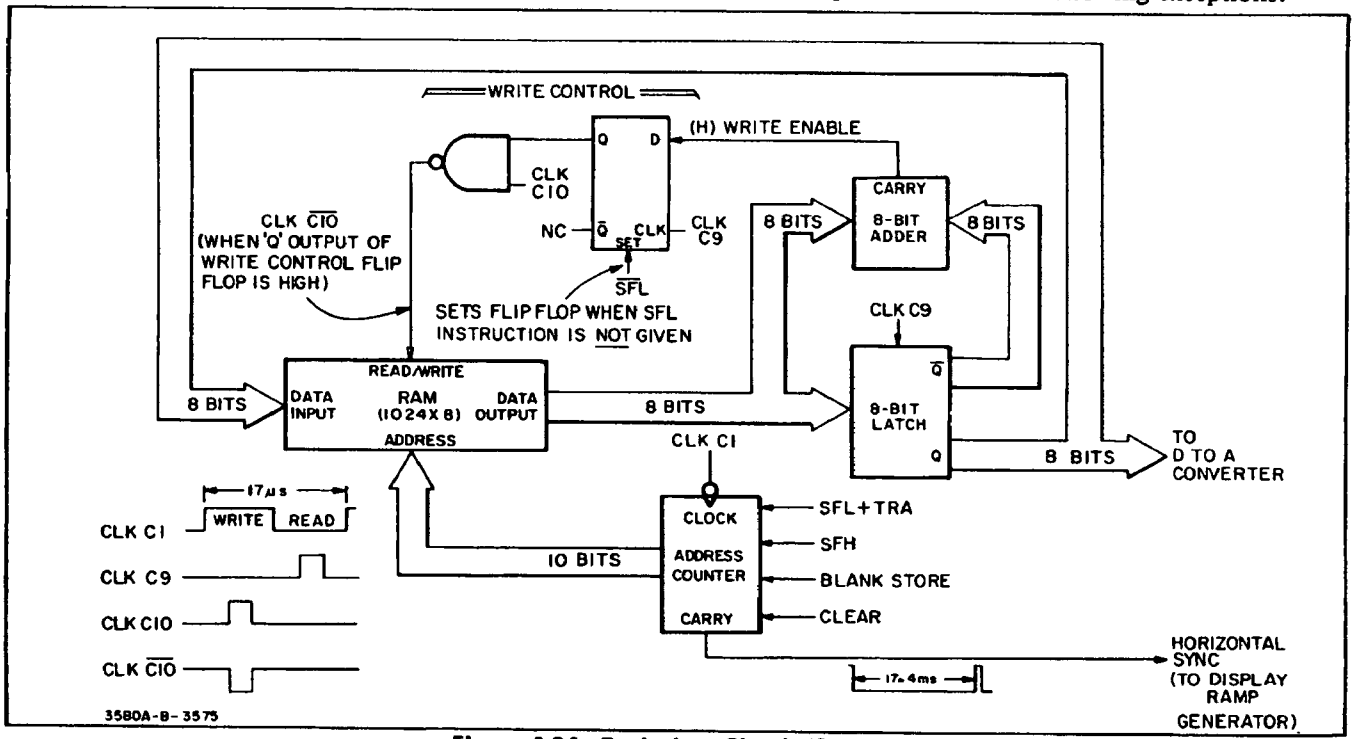


**Figure 4-24. Equivalent Circuit (State 1).**

a. The LSB of the X-Axis A to D Converter is forced to a logical "1". Since the X-Axis A to D Converter addresses the RAM during the write phase of C1, new information is written only in addresses where the LSB is a logical "1" (addresses 1, 3, 5, 7, etc.). Addresses containing the permanently stored trace are, therefore, left undisturbed.

b. The Address Counter is switched so that it first scans the addresses where the LSB is a "1" (refresh trace). It then recycles and scans the addresses where the LSB is a "0" (permanently stored trace).

c. The SFH instruction (labeled (H)FAST) is applied to the Display Ramp Generator. This doubles the display sweep rate, providing one 8.7 msec sweep for each set of addresses. As a result, both the refresh trace and the permanently stored trace appear on the CRT.

*4-160. Clear/Write Button.* When the CLEAR/-WRITE button is pressed during State 2, the following things take place:

a. The Y-Axis A to D Converter is held in the reset state and its output is 00000000.

b. The RAM address lines are switched to the Address Counter during the 8.7 msec periods when it is scanning the addresses containing the refresh trace.

c. As the Address Counter scans the addresses containing the refresh trace, all zeros are written into memory during the write phases of C1. As a result, the refresh trace is cleared from memory and the permanently stored trace is not disturbed.

*4-161. Blank Store Button.* When the BLANK STORE button is presses, the LSB of the Address Counter is forced to a logical "1". The Address Counter, therefore, continually scans the addresses containing the refresh trace and the permanently stored trace is not displayed. When the BLANK STORE button is released, the permanently stored trace returns to the display.

*4-162. State 3.* When the STORE button is released and the Address Counter resets to Ø, the Store Function Controller is incremented to State 3. The purpose of State 3 is to clear the permanently stored trace by filling the memory with the refresh trace. This is accomplished by loading the contents of addresses where the LSB is 1 into addresses where the LSB is Ø.

4-163. In State 3, the Store Function Controller gives the TRA (Transfer) instruction which performs the following functions:

a. Overrides the Clock C1 input to the Address Multiplexer causing the RAM Address lines to remain switched to the Address Counter.

b. Forces the LSB of the Address Counter to a logical "0" *during the write phase of Clock C1.* This means that information can only be written in addresses where the LSB is a logical "0".

c. Switches the Store Multiplexer so that the Data Input lines of the RAM are connected to the "Q" outputs of the 8-Bit Latch.

4-164. Figure 4-25 shows the equivalent circuit during State 3. Note that the 8-Bit Adder and the Write Control circuit are not used.

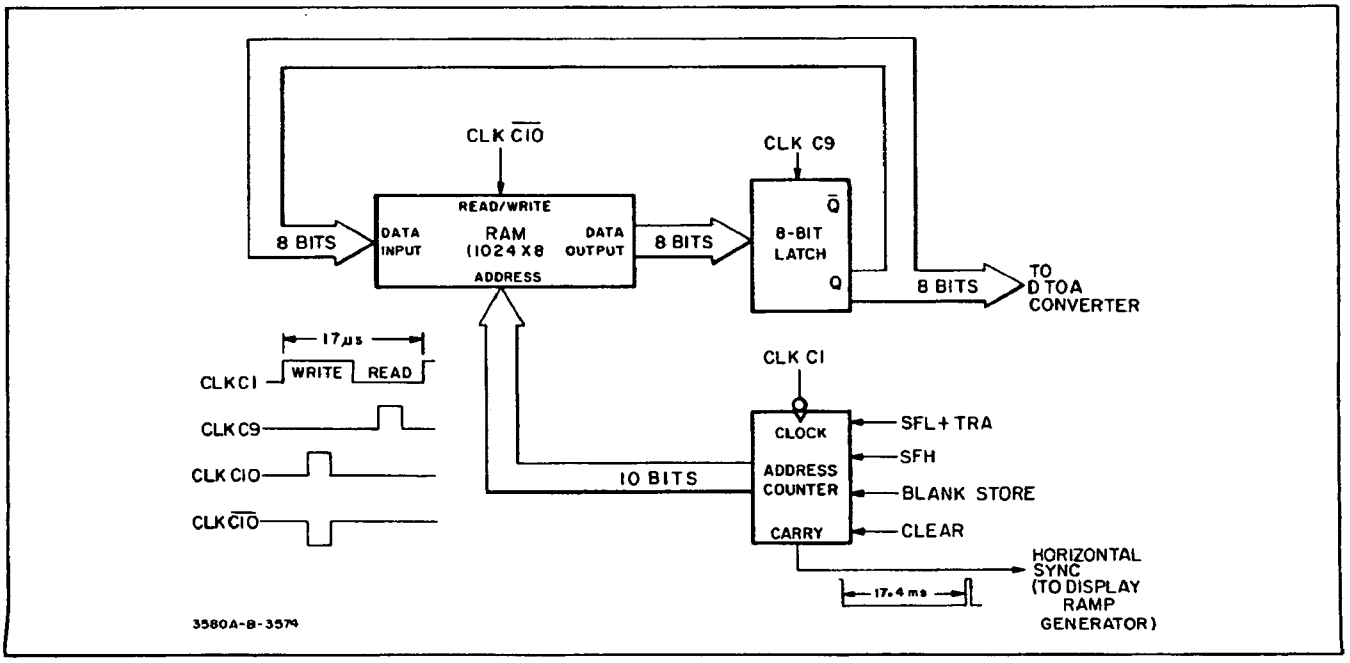


**Figure 4-25. Equivalent Circuit (State 3).**

4-165. The State 3 sequence begins with the following conditions:

a. Clock C1 has just made the transition from the write phase to the read phase.

b. The Address Counter is in State Ø and RAM address Ø is selected.

4-166. When Clock C9 goes high during the read phase, the 8-bit word from address Ø is strobed into the Latch. When Clock C1 goes into the write phase, the Address Counter remains in State Ø and, when $\overline{C10}$ goes low, the 8-bit word from address Ø is written back into address Ø, leaving address Ø unchanged. When Clock C1 again goes into the read phase, the Address Counter is incremented to State 1 and, when C9 goes high, the 8-bit word from address 1 is strobed into the Latch. During the next write phase of C1, the Addresses Counter is still in State 1 (0000000001) but because its LBS is forced to a logical "0", RAM address Ø (0000000000) is selected and the 8-bit word from address 1 (now at the output of the Latch) is written into address Ø. As the sequence continues, the contents of address 3 are written into address 2 the contents of address 5 are written into address 4, etc. When the Address Counter reaches State 1023 and resets, the Store Function Controller resets to State Ø and the system returns to its normal mode of operation. At this point, each pair of addresses (Ø and 1, 2 and 3, 4 and 5, etc.) contains the same information. Since the addresses are now read sequentially as the Address Counter increments from State Ø to State 1023, the video amplitude on the display is the same for each pair of X-Axis segments. Because of this redundancy, a series of dots appear on the display (Figure 4-26). The dots are automatically cleared when the memory contents are updated by a new frequency sweep.

### 4-167. Frequency Counter and Display.

4-168. This section covers the LIMITER, TIME BASE, and COUNTER/DISPLAY blocks of the simplified block diagram. Refer to Figures 4-27 and 4-28 for the following discussions.

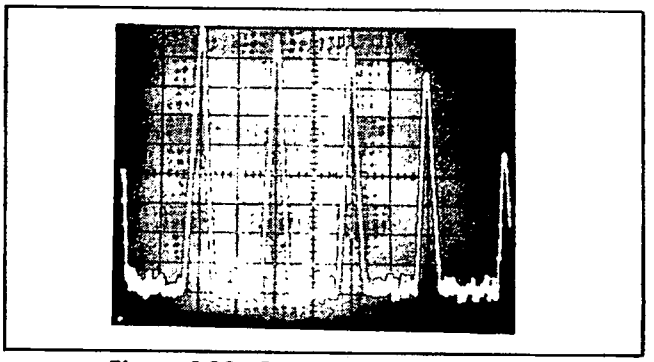

**Figure 4-26. Store Button Released.**

4-169. **Limiter.** The Limiter first processes the Buffered 100 kHz Reference signal through a 100 kHz bandpass filter. The filter is simply a parallel LCR network having a resonant frequency of 100 kHz. Next, the Limiter converts the filtered 100 kHz to a square wave which has CMOS logic levels of zero volts (D-ground, logic high)

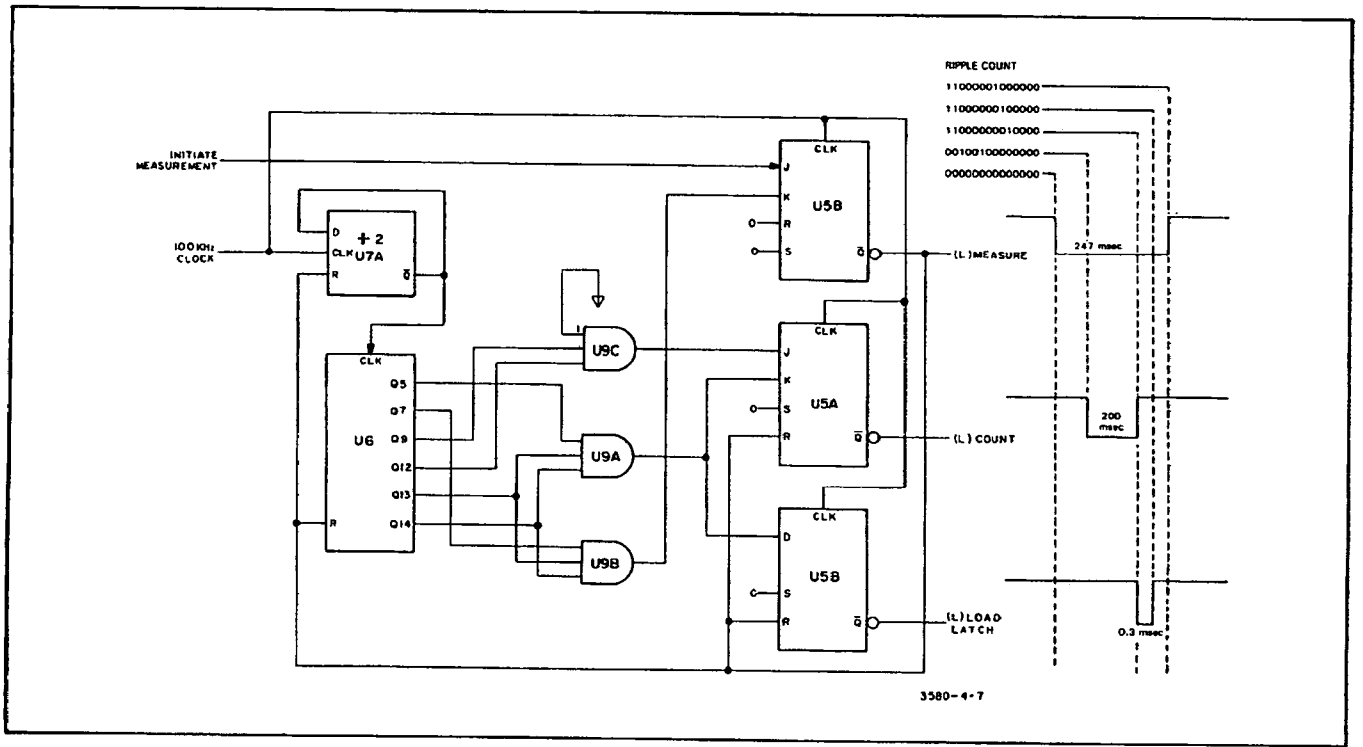


**Figure 4-27. Time Base Generator.**

and -10 volts (logic low). This convertion is done by comparator U8. The Limiter circuit converts the Buffered 100 kHz Reference to a signal capable of clocking the Time Base Generator accurately.

**4-170. Time Base Generator.** The Time Base Generator accepts the Initiate Measurement signal from the A36 board and the 100 kHz Clock signal from the Limiter. To run the counter, the Time Base Generator produces three control signals: (L)MEASURE, (L)COUNT, and (L)LOAD Latch. The heart of this signal generation is a 14-stage ripple counter.

*4-171. Operation of the Time Base Generator.* The Initiate Measurement line going high starts the sequence of events necessary for one frequency measurement. First U5B toggles when its J input goes high and its clock input receives a positive edge of the 100 kHz Clock signal; so, its Q output (H)MEASURE goes high and its $\overline{Q}$ output (L)MEASURE goes low. Both of these signals leave the board and control the circuits that prevent the VTO from sweeping. (L)MEASURE also drives the reset inputs of U7A, U7B, and U5A low; this enables them to have their J, K, and D inputs utilized. At the same time, (L)MEASURE resets the ripple counter (U6) to zero. Then, since the 100 kHz Clock is divided by two by U7A, the ripple counter begins counting at a rate of 50 kHz. When the binary count reaches 00100100000000 (i.e. the ripple counters Q9 and Q12 outputs go high), the output of AND gate U9C goes high. This forces the J input of U5A high which makes its $\overline{Q}$ output (L)COUNT go low. Since U5A is a J-K masters/slave flip-flop, its output state won't change until its K input is driven high; this is done when the ripple counter reaches a binary count of 11000000010000 (i.e. its Q5, Q13, and Q14 outputs have gone high) and the output of AND gate U9A goes high. Also at this time, the D input of U7A is forced high causing its $\overline{Q}$ output (L)LOAD LATCH to go low. When the count reaches 11000000100000 the output of AND gate U9A goes low and the output of U7B goes high. Finally, when the ripple counter reaches 11000001000000 (its Q7, Q13, and Q14 outputs are high), the output of AND gate U9B goes high; this resets U5B via its K input causing its $\overline{Q}$ output (L)MEASURE to go high. In this way, the signals that control the counter are generated.

4-172. Notice that the (L)COUNT line is driven low from 00100100000000 to 11000000010000. The difference of these two binary numbers is 10011100010000; the decimal equivilent of this is 10,000. So, the (L)COUNT line goes low for 10,000 counts. Since the binary number is counting at a rate of 50 kHz (Q1 is a 25 kHz square wave) each count is 20 $\mu$sec in duration. The (L)COUNT line goes low for 10,000 counts times 20 $\mu$sec/count, or 200 msec. The accuracy of this time is dependent on the accuracy of 100 kHz Reference signal. The remaining time durations of the control pulses can be calculated in this manner; they are illustrated in Figure 4-26 for your convenience.

**4-173. Counter/Display.** Using the 1.0 - 1.5 MHz L.O. signal and the three control signals from the Time Base Generator, the Counter/Display circuitry measures and displays the start, center, or manual vernier frequency. Part of the display circuitry also blanks the display when the BLANK DISPLAY line goes high.

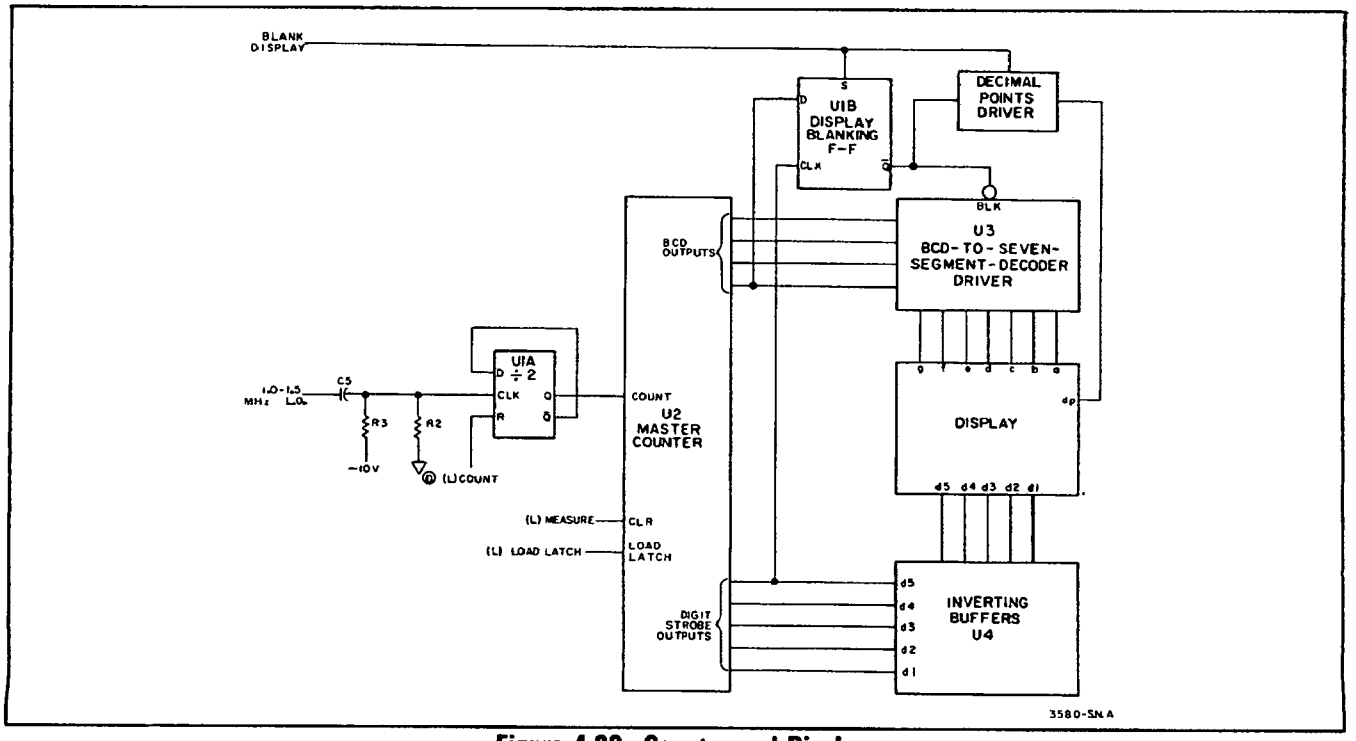


**Figure 4-28. Counter and Display.**

*4-174. Operation of the Counter.* Initially, the 1.0 - 1.5 MHz L.O. signal has any dc component eliminated by C5; then a level shifter, consisting of R2 and R3, assures that the signal has a dc offset of about -5 volts. This signal then goes to the clock input of U1A. The first event occurring in the sequence of counting is the (L)MEASURE line going low. Since this line goes to the clear input of the counter chip, it must change to a low state in order for the counter to be enabled. Next in the sequence, the (L)COUNT line goes low; because this line is connected to the Reset input of U1A, the flip-flop is enabled. Since U1A is connected in a divide-by-two configuration, the count input to the counter is 500-750 kHz (of course, the input to the counter is only one frequency because the VTO has been disabled by the (L)MEASURE and (H)MEASURE lines. (L)COUNT is held low for 200 msec as dictated by the Time Base Generator. At the end of this time, the (L)COUNT line goes high and the (L)LOAD LATCH line goes low. When the (L)COUNT line goes high, U1A is disabled and the counter no longer has an input signal. The (L)LOAD LATCH going low causes the last state of the counter to be stored in an on-chip latch; this line stays low for only 0.3 msec - an adaquate amount of time for the latch to be loaded. The final event of the counting sequence is simply the (L)MEASURE line goine high, disabling the counter and allowing the VTO to sweep again.

4-175. If, for example, the center frequency of the display is 50 kHz, then the 1.0 - 1.5 MHz signal would have a frequency of 1.5 MHz at the time of the frequency measurement. The output of the divide-by-two flip-flop would be 750 kHz. The number of counts recorded by the counter during 200 msec would be 750000 counts-per-second times 0.2 seconds, or 150000 counts. The latch inside the counter chip contains six digits; since only the last five digits are displayed, the proper center frequency of 50000 Hz is displayed.

*4-176. Operation of the Display.* The five digits representing the frequency count are displayed in the following manner. The counted frequency has been stored in the latch in U2. The output of U2 consists of four lines for BCD and five lines to strobe each digit to be displayed. U2 contains all the needed circuitry to insure that for any given digit, the correct BCD will be outputted when its corresponding digit strobe is high. U3 is a BCD-to-seven-segment-decoder-driver; it converts the BCD output of U2 to seven segment information and drives the appropriate anodes of the display high. The digit strobe outputs of U2 are buffered and inverted by U4 before driving the correct common cathodes of the display low. Each digit of the display has seven LEDS with a common cathode; the anodes of identical segments (of all the digits) are also common. As each digit is selected, the correct segments for that digit are also selected. Thus, the five digits from the latch are displayed.

4-177. Whenever the instrument is switched into the Log Zero or Log sweep mode, the Blank Display line goes high. This causes the display-blanking flip-flop (U1B) to drive the blanking input of U3 low; the outputs of U3 are disabled by this. The Blank Display line also causes the decimal points to be blanked.

4-178. If the display attempts to go one count below 00000 Hz, it tries to become 99999 Hz. This is because the number in the latch goes from 100000 to 099999. When the MSD of the attempted display frequency is eight or nine (BCD output of 1000 or 1001, and the D5 output is high), the display is blanked by U1B. U1B also causes the decimal points driver (Q1) to light the decimal points.

**WARNING**

*Maintenance described herein is performed with power supplied to the instrument, and protective covers removed. Such maintenance should be performed only by service-trained personnel who are aware of the hazards involved (for example, fire and electrical shock). Where maintenance can be performed without power applied, the power should be removed.*

# SECTION V
# MAINTENANCE

## 5-1. INTRODUCTION.

5-2. This section contains Performance Tests (Paragraph 5-5) and Adjustment Procedures (Paragraph 5-48) for the Model 3580A Specturm Analyzer. Troubleshooting information is presented in Section VII, along with the Schematic Diagrams.

## 5-3. RECOMMENDED TEST EQUIPMENT.

5-4. The test equipment that is recommended for maintaining the Model 3580A is listed in Table 5-1. The equipment is designated as to its use for Performance Tests, Adjustments or Troubleshooting.

## 5-5. PERFORMANCE TESTS.

5-6. The following Performance Tests are procedures that can be used to verify that the 3580A is operating properly and meets the specifications listed in Table 1-1. These procedures can be used for incoming quality control inspection, to check specifications after a repair or for routine maintenance. Where possible, the Performance Tests call out the proper adjustment in the Adjustment Procedures. Since adjustments interact, it is important to follow the procedures carefully.

a. FREQUENCY TESTS (Paragraph 5-9).

b. SWEEP TESTS (Paragraph 5-13).

c. AMPLITUDE TESTS (Paragraph 5-18).

d. BANDWIDTH TESTS (Paragraph 5-28).

e. DYNAMIC RANGE TESTS (NOISE TESTS) (Paragraph 5-30).

f. IF FEEDTHRU and ZERO BEAT RESPONSE TSTS (Paragraph 5-36).

g. INPUT IMPEDANCE TESTS (Paragraph 5-38).

h. OUTPUT TESTS (Paragraph 5-40).

i. BALANCED INPUT TESTS (Option 002 only) (Paragraph 5-44).

## 5-7. Test Card.

5-8. A Performance Test Card is provided at the end of this section for your convenience in recording the performance of the Model 3580A during Performance Tests. This card can be removed from the manual and used as a permanent record of the incoming inspection or of a routine performance test. The Performance Test Card may be reproduced without written permission from Hewlett-Packard.

**NOTE**

*Always allow one hour continuous warm-up before attempting any tests.*

## 5-9. Frequency Tests. Δ16

5-10. These tests verify part of the Frequency Characteristic Specifications listed in Table 1-1. If, for any reason, the instrument will not pass these tests, perform the Swwep Alignment (Paragraph 5-63) of the Adjustment Procedures.

### 5-11. Range and Frequency Display Accuracy Test.

a. Position the following front panel controls:

ADAPTIVE SWEEP.....OFF
DISPLAY.....All pushbuttons released
AMPLITUDE MODE...LOG 10 dBv/DIV
AMPLITUDE REF LEVEL....NORMAL
dBv/LIN - dBm 600 Ω.....dBv/LIN
INPUT SENSITIVITY.....CAL
VERNIER (Amplitude).....CAL
(Fully CW)
FREQUENCY.....30000 Hz
START-CTR.....CTR
RESOLUTION BANDWIDTH.....1 Hz
DISPLAY SMOOTHING.....MIN
FREQ. SPAN/DIV.....5 Hz
SWEEP TIME/DIV..... .2 SEC
SWEEP MODE.....MAN

Option 002: Set dBm 900 Ω/LIN-dBm 600 Ω switch to dBm 900 Ω; set INPUT MODE switch to UNBAL.

b. By alternately pressing and releasing DISPLAY-CLEAR WRITE while adjusting the MANUAL VERNIER, center the display indication.

c. With the display indication now on the center graticule, vary the FINE FREQUENCY control to peak the display indication.

d. The FREQUENCY display should read 30000 Hz ± 3 Hz.

e. Change the RESOLUTION BANDWIDTH to 3 Hz. Repeat Steps c and d.

## Table 5-1. Recommended Test Equipment.

| INSTRUMENT | REQUIRED CHARACTERISTICS | USAGE: Performance Checks | USAGE: Adjustments | USAGE: Troubleshooting | RECOMMENDED MODEL |
|---|---|---|---|---|---|
| Digital Multimeter | DC Function:<br>Full scale ranges: 1V, 10V, 100V<br>Resolution: 4 digits<br>Input impedance: 10-12 MΩ<br>Accuracy: ± .1% of reading<br>AC Function:<br>Response: average<br>Frequency Range: 45Hz-100kHz<br>Full Scale Range: 1V, 10V, 100V<br>Resolution: 4 digits<br>Input Impedance: ≥ 10 MΩ, ≤ 100 pF<br>Accuracy: ± 1% of reading | X | X | X | -hp- 34740/34702 |
| Oscilloscope | Sensitivity: .005 V/DIV<br>Sweep: .005 μsec/DIV to .1 sec/div<br>Frequency: 0 to 10 MHz<br>Input Impedance: 1MΩ, 25 pF<br>Dual Trace (troubleshooting only) | | X | X | -hp- 180C/D with<br>-hp- 1801A Vertical Amplifier and<br>1820C Time Base |
| Voltage Dividers for Oscilloscope (2) | Division Ratio 10:1<br>Impedance: 10 MΩ, 10 pF | | X | X | -hp- 10004B |
| Electronic Counter | Function: Frequency and Time Interval<br>Frequency Range: 10 Hz to 10 MHz<br>Resolution: 6 digits<br>Sensitivity: 0.1 V rms | | X | X | -hp- 5328A |
| Frequency Synthesizer (50 ohms) | Frequency Range: 10 Hz to 1.5 MHz<br>Amplitude Range:<br>(-67.99 dBm 50 Ω to + 26.99 dBm 50 Ω)<br>Amplitude Accuracy: ± .1 dB<br>Amplitude Resolution: .01 dB<br>Frequency Resolution: .1 Hz | X | X | X | -hp- 3320B |
| 50 Ohm Termination for Syntheseizer | 1 watt<br>50 ohms ± .1 Ω | X | X | X | -hp- 11048C |
| Distortion Analyzer | Fundamental Frequency Range:<br>10 Hz to 100 kHz<br>Distortion Measurement Accuracy:<br>± 10% for greater than .3% distortion | X | | | -hp- 333A |
| Bandpass Filter | Center of Bandpass at 5 kHz<br>Output Distortion: (with Frequency Synthesizer): > 90 dB down | X | | | White Model 2640 |
| DC High Voltage Probe Calibrated to 1000 V dc standard<br>OR<br>Precision High Voltage Probe | Range: 5 kV<br>DC Standard Accuracy: ± 1%<br><br>OR<br>Accuracy: ± .1%<br>Range: 5 kV | | X | X | -hp- 11045A and -hp- 740B<br><br>OR<br>-hp- 3440A-K05 Probe and -hp- 3440A DVM |
| 1 kΩ Resistor | 1% film resistor | X | | | -hp- 0757-0280 |
| (2) 453 Ω resistors | 1% film resistor | X | | | -hp- 0698-3510 |
| 10 kΩ Resistor | 10% carbon or film resistor | | | X | -hp- 0757-0442 |
| 550 Ω Resistor | 10% carbon or film resistor | X | | | -hp- 0698-4456 |
| 1 MΩ Resistor | 1% film resistor | X | | | -hp- 0757-0344 |
| Logic Clip | Able to detect TTL HIGH and LOW levels for DUAL IN-LINE configuration, 16 pins | | | X | -hp- 10528A |

**5-12. Display Accuracy Tests.**

a. Repostion the following front panel controls.

START-CTR ..... START
SWEEP MODE.....RESET
FREQUENCY.....00000 Hz
RESOLUTION BANDWIDTH.....300 Hz
FREQ. SPAN/DIV..... 5 kHz
SWEEP MODE.....REP

b. The 10 kHz CAL signal and its harmonics should be repetitively swept and appear on the display as shown by Figure 5-1. The separation between the Zero Response and 50 kHz harmonic should be 10 major divisions ± 1 minor division. The separation between any two adjacent responses should be 2 major divisions ± .2 minor divisions. Momentarily push and release DISPLAY - STORE, watching the dislay to verify that the STORE and NON-STORE traces appear in the same position.

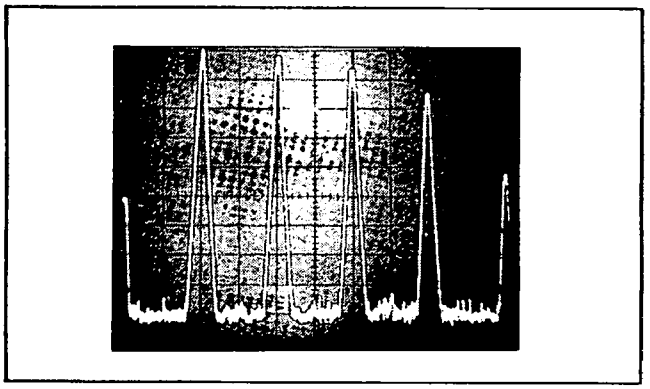

**Figure 5-1. 10 kHz CAL Signal.**

**5-13. Sweep Tests.** Δ16

5-14. These tests verify the Sweep Characteristics Specifications given in Table 1-1. If the instrument fails the Frequency Span Tests (Paragraph 5-15), perform the Sweep Alignment (Paragraph 5-63) of the Adjustment Procedures. If it fails only the Log Sweep Test (Paragraph 5-16), perform only the Log Sweep Adjustments (Paragraph 5-67) of the Sweep Alignment. All sweep time calibration is done with a factory selected resistor. If the instrument will not pass the Sweep Time Tests (Paragraph 5-17), refer to Section VII for additional information.

**5-15. Frequency Span Test.**

a. Position the following front panel controls: (Only those controls printed in **BOLD** reuqire a change from the previous test.)

ADAPTIVE SWEEP.....OFF
DISPLAY.....All pushbuttons released
AMPLITUDE MODE..LOG 10 dBV/DIV
AMPLITUDE REF LEVEL....NORMAL
dBV/LIN – dBm 600 Ω.....dBv/LIN
**INPUT SENSITIVITY..... 0 dBV**
VERNIER (Amplitude).....CAL (Fully CW)
FREQUENCY.....00000 Hz
RESOLUTION BANDWIDTH.....300 Hz
START-CTR ..... START
DISPLAY SMOOTHING.....MIN
**FREQ. SPAN/DIV.....5Hz**
SWEEP TIME/DIV.....0.2 SEC
**SWEEP MODE.....Manual**

Option 002: Set dBm 900 Ω/LIN - dBm 600 Ω switch to dBm 900Ω; set INPUT MODE switch to UNBAL.

b. Adjust MANUAL VERNIER full CCW.

c. Adjust the FINE FREQUENCY control for a 00000 Hz indication on the FREQUENCY display.

d. Adjust MANUAL VERNIER full CW. The FREQUENCY display should be 00050 Hz ± 1 Hz.

e. Readjust MANUAL VERNIER full CWW. Reposition FREQ.SPAN/DIV - 10 Hz.

f. Readjust the FINE FREQUENCY control for a 00000 Hz indication on the FREQUENCY display.

g. Adjust MANUAL VERNIER full CW. The FREQUENCY display should be 00100 Hz ± 2 Hz.

h. Continue this procedure for the remaining FREQ. SPAN/DIV settings. Refer to Table 5-2 for the proper tolerances.

**Table 5-2. Frequency Span Test.**

| FREQ. SPAN/DIV | COUNTER READING | |
|---|---|---|
| | MANUAL VERNIER FULL CCW | MANUAL VERNIER FULL CW |
| 5 Hz | 00000 Hz | 00050 Hz ± 1 Hz |
| 10 Hz | 00000 Hz | 00100 Hz ± 2 Hz |
| 20 Hz | 00000 Hz | 00200 Hz ± 4 Hz |
| 50 Hz | 00000 Hz | 00500 Hz ± 10 Hz |
| .1kHz | 00000 Hz | 01000 Hz ± 20 Hz |
| .2kHz | 00000 Hz | 02000 Hz ± 40 Hz |
| .5kHz | 00000 Hz | 05000 Hz ± 100 Hz |
| 1 kHz | 00000 Hz | 10000 Hz ± 200 Hz |
| 2 kHz | 00000 Hz | 20000 Hz ± 400 Hz |
| 5 kHz (checked in Para 5-16) | ----- | ----- |

**5-16. Log Sweep Test.**

a. Reposition the controls as follows:

INPUT SENSITIVITY.....CAL
RESOLUTION BANDWIDTH.....30 Hz
SWEEP MODE.....LOG ZERO

b. Momentarily press DISPLAY - CLEAR WRITE.

c. Adjust the FINE FREQUENCY control for a frequency indication of 20 Hz.

d. Reposition the controls as follows:

RESOLUTION BANDWIDTH.....300 Hz
SWEEP MODE.....LOG

**Allow time for three complete sweeps.**

e. Verify that the 20 kHz harmonic of the internal CAL signal falls on the proper graticule (± 1 minor division). If the instrument will not pass this test, but passes all previous tests, perform only the Log Sweep Adjustments (Paragraph 5-67) of the Adjustment Procedures.

**5-17. Sweep Time Tests.**

a. Reposition the controls as follows:

SWEEP TIME/DIV.....0.01 SEC
SWEEP MODE.....SING

Momentarily press:

DISPLAY.....CLEAR WRITE

b. The display should be erased, and then swept once. Remembering the sweep time, reposition the controls as follows:

SWEEP TIME/DIV.....0.02 SEC

c. Again, press:

DISPLAY.....CLEAR WRITE

The sweep time should appear slower.

d. Repeat this procedure for all sweep times, always looking for progressively slower sweep rates. On the slowest sweep rates, it will not be necessary to complete a full sweep before switching to the next SWEEP TIME/DIV. Let the instrument sweep only as long as is necessary to monitor the rate. A more accurate method for measuring sweep time is given in Paragraph 7-39.

**5-18. Amplitude Tests. Δ16**

5-19. These tests verify the Amplitude Specifications given in Table 1-1. Amplitude accuracy must be determined before the Bandwidth Specifications can be tested. Since the IF Filter Alignment (Paragraph 5-70) interacts with the Amplitude Accuracy, it is important that the IF Filter Alignment be performed first if the instrument will not pass any of the Amplitude Accuracy Tests. The Amplitude Tests should then be repeated, and if the instrument still fails these tests, then perform the Amplitude Adjustments (Paragraph 5-74) of the Adjustment Procedures.

**NOTE**

*There are no adjustments for Amplitude Reference Level Tests (Linear and Log Mode). If the instrument passes all Amplitude Tests except one or both of these, refer to Section VII for troubleshooting information.*

Equipment Required:

Frequency Synthesizer (-hp- Model 3320B, 50 ohms)
50 Ohm Termination (-hp- 11048C)
Digital Multimeter (-hp- Model 34740/34702)

**5-20. Bandwidth Switching Accuracy Tests.**

a. Position the following front panel controls: (Only those controls printed in **BOLD** require a change from the previous tests.)

ADAPTIVE SWEEP.....OFF
**DISPLAY.....All pushbuttons released**
**AMPLITUDE MODE...LOG 1 dBV/DIV**
AMPLITUDE REF LEVEL....NORMAL
dBV/LIN-dBm 600Ω.....dBV/LIN
**INPUT SENSITIVITY.....0 dBV**
VERNIER (Amplitude).....CAL (Fully CW)
**START-CTR.....CTR**
RESOLUTION BANDWIDTH.....300 Hz
DISPLAY SMOOTHING.....MIN
**FREQUENCY SPAN/DIV.....5 Hz**
**SWEEP TIME/DIV.....0.1 SEC**
**SWEEP MODE.....RESET**
**FREQUENCY.....10000 Hz**
**SWEEP MODE.....MANUAL**

Option 002: Set dBm 900Ω/LIN-dBm 600 Ω switch to dBm 900Ω; set INPUT MODE switch to UNBAL.

b. Connect a properly terminated frequency synthesizer to the 3580A INPUT and adjust the source for a 10 kHz, 0 dBV output level (0 dBm 900 Ω for instruments with Option 002).

**NOTE**

*See Table 5-3 for the proper level to use with your source. See Figure 5-2 for the proper hookup with an -hp- 3320B Frequency Synthesizer.*

c. By alternately pressing and relesting DISPLAY-CLEAR WRITE while adjusting MANUAL VERNIER, center the display indication (a narrow spike).

d. Adjust the FINE FREQUENCY control for a peak of this spike.

Model 3580A

**Table 5-3. Conversion Table.**

| 3580A INPUT SIGNAL LEVEL | 3320B or OTHER 50 OHM SOURCE | ABSOLUTE VOLTAGE |
|---|---|---|
| + 10 dBV | + 23.01 dBm | 3.162 volts |
| +10 dBm 900Ω | +22.55 dBm | 3 volts |
| 0 dBV | +13.01 dBm | 1 volts |
| 0 dBm 900Ω | +12.55 dBm | .949 volts |
| −10 dBV | +3.01 dBm | .3162 volts |
| −10 dBm 900Ω | +2.55 dBm | .3000 volts |
| −20 dBV | −6.99 dBm | .1 volts |
| −20 dBm 900Ω | −7.45 dBm | .0949 volts |
| −30 dBV | −16.99 dBm | .03162 volts |
| −30 dBm 900Ω | −17.45 dBm | .03 volts |
| −40 dBV | −26.99 dBm | .01 volts |
| −40 dBm 900Ω | −27.45 dBm | .095 volts |
| −50 dBV | −36.99 dBm | 3162 mV |
| −50 dBm 900Ω | −37.45 dBm | 3 mV |
| −60 dBV | −46.99 dBm | 1 mV |
| −60 dBm 900Ω | −47.45 dBm | .95 mV |
| −70 dBV | −56.99 dBm | .3162 mV |
| −70 dBm 900Ω | −57.45 dBm | .3 mV |
| −80 dBV | −66.99 dBm | .1 mV |
| −80 dBm 900Ω | −67.99 dBm | .095 mV |

e. Adjust the front panel VERNIER (Amplitude) for a −1 dB display indication. Note: The display indication is calibrated 1.0 dB per major division.

f. Reposition the following front panel control:

RESOLUTION BANDWIDTH.....100 Hz

g. Adjust the front panel FINE FREQUENCY control for a peak display indication. The display indication should be −1 dB ± .5 dB.

h. Repostion the following front panel control:

RESOLUTION BANDWIDTH.....30 Hz

i. Slowly adjust MANUAL VERNIER for a peak display indiction. The peak indication should be −1 dB ± .5 dB. Momentarily press DISPLAY-CLEAR WRITE.

j. Reposition the following front panel control:

RESOLUTION BANDWIDTH.....10 Hz

k. Readjust MANUAL VERNIER for a peak display indication. The peak indication should be −1 dB ± .5 dB. Momentarily press DISPLAY-CLEAR WRITE.

l. Reposition the following front panel control:

RESOLUTION BANDWIDTH.....3 Hz

m. Slowly readjust MANUAL VERNIER for a peak display indication. The peak indication should be −1 dB ± .5 dB. Momentarily press DISPLAY-CLEAR WRITE.

n. Reposition the following front panel control:

RESOLUTION BANDWIDTH.....1 Hz

o. Very slowly readjust MANUAL VERNIER for a peak display indication. The peak indication should be −1 dB ±1 dB.

**5-21. Log Amplitude Display Accuracy Tests.**

a. Reposition the following front panel controls:

VERNIER (Amplitude).....CAL
AMPLITUDE MODE....LOG 10 dB/DIV
RESOLUTION BANDWIDTH.....10 Hz

b. By alternately pressing and releasing DISPLAY-CLEAR WRITE while adjusting MANUAL VERNIER, center the display indication (a narrow spike).

c. Adjust the CAL 10 kHz for a full scale 0 dB display indiction of the spike.

d. Adjust the signal source to the levels indicated by Table 5-4. Check the display for proper level. (See Table 5-3 for the proper Input Level setting to use on your signal source.)

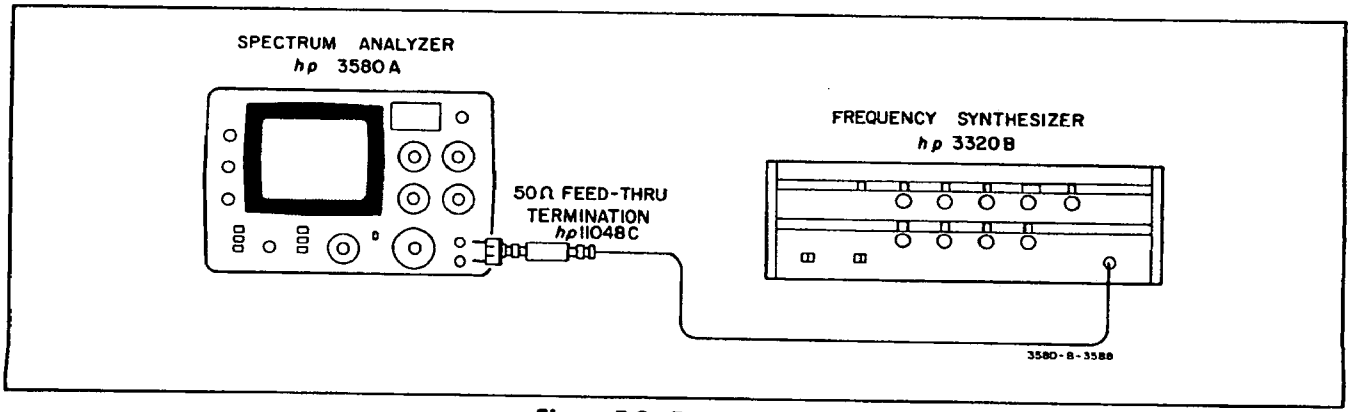


**Figure 5-2. Proper Hookup.**

NOTE

*For the −60 dB, −70 dB and −80 dB readings, readjust MANUAL VERNIER for a peak display indication.*

**Table 5-4. Log Amplitude Tests.**

| INPUT LEVEL (10 kHz) | | |
|---|---|---|
| STANDARD INSTRUMENT | OPTION 002 900 Ω INSTRUMENT | DISPLAY INDICATION (0 dB = full scale) |
| −10 dBV | −10 dBm | −10 dB ± 2 dB |
| −20 dBV | −20 dBm | −20 dB ± 2 dB |
| −30 dBV | −30 dBm | −30 dB ± 2 dB |
| −40 dBV | −40 dBm | −40 dB ± 2 dB |
| −50 dBV | −50 dBm | −50 dB ± 2 dB |
| −60 dBV | −60 dBm | −60 dB ± 2 dB |
| −70 dBV | −70 dBm | −70 dB ± 2 dB |
| −80 dBV | −80 dBm | −80 dB ± 2 dB |

**5-22. Linear Amplitude Display Accuracy Tests.**

a. Reposition the following front panel controls:

AMPLITUDE MODE.....LINEAR

b. Adjust the signal source for a 1 volt (0 dBV) output (See Table 5-3 for the proper setting to use on your source). Adjust MANUAL VERNIER for a peak display indication.

c. Adjust the CAL 10 kHz for a full scale 1 volt display indication. Momentarily press DISPLAY-CLEAR WRITE.

d. Adjust the signal source to the levels indicated by Table 5-5. Check that the display is accurate for each setting.

**Table 5-5. Linear Amplitude Tests.**

| INPUT LEVEL (10 kHz) | 3320B or OTHER 50 OHM SOURCE | DISPLAY INDICATION (1 volt = full scale) |
|---|---|---|
| .9 V | 12.10 dBm | .9 V ± .02 V |
| .8 V | 11.07 dBm | .8 V ± .02 V |
| .7 V | 9.91 dBm | .7 V ± .02 V |
| .6 V | 8.51 dBm | .6 V ± .02 V |
| .5 V | 6.99 dBm | .5 V ± .02 V |
| .4 V | 5.05 dBm | .4 V ± .02 V |
| .3 V | 2.55 dBm | .3 V ± .02 V |
| .2 V | − .97 dBm | .2 V ± .02 V |
| .1 V | −6.99 dBm | .1 V ± .02 V |

**5-23. Amplitude Reference Level Test (Linear Mode).**

a. Reposition the following front panel control:

DISPLAY SMOOTHING.....MAX
RESOLUTION BANDWIDTH.....30 Hz

b. Adjust the synthesizer for a 10 kHz, 1 volt output (+ 13.01 dBm, 50 ohm).

c. Readjust MANUAL VERNIER for a peak display indication. Adjust VERNIER (Amplitude) for a display indication at 90% of full scale.

d. Adjust the frequency synthesizer and AMPLITUDE REF LEVEL to the values given in Table 5-6. Check for proper display level.

NOTE

*If the instrument fails this test, see Section VII for troubleshooting information. There are no adjustments for this specification.*

**Table 5-6. Amplitude Ref Level Tests (Linear Mode).**

| INPUT LEVEL (10 kHz) | 3320B or OTHER 50 OHM SOURCE | AMP REF LEVEL | DISPLAY INDICATION (% of Full Scale) |
|---|---|---|---|
| 1 V | +13.01 dBm | Normal | 90% (CAL) |
| 200 mV | − .99 dBm | −10 | 90% ± 1.5 minor div. |
| 100 mV | − 6.99 dBm | −20 | 90% ± 1.5 minor div. |
| 20 mV | −20.99 dBm | −30 | 90% ± 1.5 minor div. |
| 10 mV | −26.99 dBm | −40 | 90% ± 1.5 minor div. |
| 2 mV | −40.99 dBm | −50 | 90% ± 1.5 minor div. |
| 1 mV | −46.99 dBm | −60 | 90% ± 1.5 minor div. |
| .2 mV | −60.99 dBm | −70 | 90% ± 1 major div. |

**5-24. Amplitude Reference Level Tests (Log Mode).**

NOTE

*If the instrument fails this test, see Section VII for troubleshooting information. There are no adjustments for this specification.*

a. Reposition the following front panel controls:

AMPLITUDE MODE....LOG 10 dB/DIV
AMPLITUDE REF LEVEL....NORMAL
Input Sensitivity.....−10 dBV

b. Conect the digital multimeter (DC mode, 100 volt range) to the Y AXIS output of the 3580A.

c. Adjust the signal source for a −70 dBV output (−70 dBm 900 % for Option 002). (See Table 5-3 for proper levels.) Adjust the MANUAL VERNIER and the FINE FREQUENCY control for a peak display. Adjust VERNIER (Amplitude) for a 1.50 volt ± .01 volt reading on the multimeter.

d. Adjust the AMPLITUDE REF LEVEL switch to the settings given in Table 5-7. Check for the proper multimeter reading.

NOTE

*MANUAL VERNIER may have to be readjusted to insure a peak display indication.*

**Table 5-7. Amplitude Ref. Level Tests (Log Mode).**

| INPUT LEVEL (10 kHz) | | | |
|---|---|---|---|
| STANDARD INSTRUMENT | OPTION 002 900 Ω | AMPLITUDE REF. LEVEL | MULTIMETER READING |
| -70 dBV | -70 dBm | -10 dB | 2.00 V ± 0.02 V |
| -70 dBV | -70 dBm | -20 dB | 2.50 V ± 0.03 V |
| -70 dBV | -70 dBm | -30 dB | 3.00 V ± 0.04 V |
| -70 dBV | -70 dBm | -40 dB | 3.50 V ± 0.06 V |
| -70 dBV | -70 dBm | -50 dB | 4.00 V ± 0.08 V |
| -70 dBV | -70 dBm | -60 dB | 4.50 V ± 0.10 V |
| -70 dBV | -70 dBm | -70 dB | 5.00 V ± 0.12 V |

e. Disconnect the multimeter from the 3580A.

**5-25. Input Attenuator Tests.**

a. Reposition the following front panel controls:

VERNIER (Amplitude).....CAL
AMPLITUDE MODE.....LINEAR
AMPLITUDE REF LEVEL.....-30 dB
INPUT SENSITIVITY
(according to white marker).....1 V
DISPLAY SMOOTHING.....MIN

b. Adjust the signal source for a 1 volt 10 kHz output (See Table 5-8). Adjust MANUAL VERNIER for a peak display indication. Adjust CAL 10 kHz for a full scale display. Momentarily press DISPLAY-CLEAR WRITE.

c. Adjust the signal source and INPUT SENSITIVITY switch to the levels given in Table 5-8. Check for the proper display indication.

d. Reposition the following front panel control:

AMPLITUDE REF LEVEL....NORMAL

**Table 5-8. First Input Attenuator Test.**

| INPUT LEVEL (10 kHz) | 3320B or OTHER 50 OHM SOURCE | INPUT SENSITIVITY (according to white marker) | DISPLAY INDICATION |
|---|---|---|---|
| 1 V | +13.01 dBm | 1 V | Full Scale (CAL) |
| .2 V | - .99 dBm | .2 V | Full Scale (± 3%) |
| .1 V | - 6.99 dBm | .1 V | Full Scale (± 3%) |
| 20mV | -20.99 dBm | 20mV | Full Scale (± 3%) |

e. Adjust the signal source for a 1 volt 10 kHz output (See Table 5-9). Adjust the CAL 10 kHz for a full scale display.

f. Adjust the signal source and INPUT SENSITIVITY switch to the values given in Table 5-9. Check for the proper display indication.

**Table 5-9. Second Input Attenuator Test.**

| INPUT LEVEL (10 kHz) | 3320B or OTHER 50 OHM SOURCE | INPUT SENSITIVITY | DISPLAY INDICATION |
|---|---|---|---|
| 1 V | +13.01 dBm | 1 V | Full Scale (CAL) |
| .2 V | - .99 dBm | .2 V | Full Scale (± 3%) |
| .1 V | - 6.99 dBm | .1 V | Full Scale (± 3%) |
| 20mV | -20.99 dBm | 20mV | Full Scale (± 3%) |
| 10mV | -26.99 dBm | 10mV | Full Scale (± 3%) |
| 2mV | -40.99 dBm | 2mV | Full Scale (± 3%) |
| 1mV | -46.99 dBm | 1mV | Full Scale (± 3%) |
| .2mV | -60.99 dBm | .2mV | Full Scale (± 3%) |

**5-26. Frequency Response Tests.**

a. Reposition the following front panel controls:

AMPLITUDE MODE....LOG 10 dB/DIV
AMPLITUDE REF LEVEL.....-30 dB
INPUT SENSITIVITY
(according to white marker).....0 dB
RESOLUTION BANDWIDTH.....3 Hz

b. Adjust the signal source for a 10 kHz 0 dBV output (0 dBm 900 Ω for Option 002). (See Table 5-3).

c. By alternately pressing and releasing DISPLAY-CLEAR WRITE while adjusting MANUAL VERNIER, center the display indiction (a narrow spike). Adjust the FINE FREQUENCY control for a peak of this spike.

d. Reposition the following front panel control:

AMPLITUDE MODE.....LOG 1 dB/DIV

e. Readjust MANUAL VERNIER for a peak display.

f. Adjust VERNIER (Amplitude) for a -1 dB display (1 dB/div).

g. Adjust the signal source to the frequencies given in Table 5-10 (refer to Table 5-3) for an INPUT SENSITIVITY of 0 dB. At each frequency, adjust the FREQUENCY controls to that of the source. Then, slowly adjust the FINE FREQUENCY control for a peak display. Momentarily press DISPLAY-CLEAR WRITE. Check for proper level as given in Table 5-10. Note: The display is calibrated 1 dB per major division.

h. Repeat Steps e through g for an INPUT SENSITIVITY and source levels of -10 dB, -20 dB and -40 dB (according to white marker and with a -30 dB AMPLITUDE REF LEVEL). Consult Table 5-3 and Table 5-10 for the proper input level and frequencies to use. At the start of each new INPUT SENSITIVITY, always recalibrate the instrument at 10 kHz with CAL 10 kHz.

**5-27. Internal Calibrator Test.**

a. Reposition the following front panel controls:

Amplitude Mode.....LOG 1 dB/DIV
VERNIER (Amplitude).....CAL
AMPLITUDE REF LEVEL....NORMAL
INPUT SENSITIVITY.....−20 dB
START-CTR.....START
RESOLUTION BANDWIDTH.....300 Hz
FREQ. SPAN/DIV.....5 kHz
SWEEP TIME/DIV.....0.2 SEC
SWEEP MODE.....REP
FREQUENCY.....00000 Hz

b. Adjust the signal source for a 10 kHz −20 dBV (−20 dBm 900 Ω if Option 002) output. (See Table 5-3 for proper level.)

c. Adjust the FINE FREQUENCY control for a display response on the 10 kHz graticule (2 major divisions from left graticule). (After each trial adjustment, allow 2 seconds for the next sweep before verifying the accuracy of the adjustment.)

d. Adjust the CAL 10 kHz for a full scale 0 dB display. (After each trial adjustment, allow 2 seconds for the next sweep before verifying the accuracy of the adjustment.)

e. Reposition the following front panel control:

INPUT SENSITIVITY.....CAL

f. Verify that the 10 kHz harmonic of the CAL signal appears 2 major divisions from left graticule with a full scale 0 dB level (± .15 dB). (1 dB = 1 major division.)

**5-28. Bandwidth Tests. Δ16**

5-29. This test verifies the bandwidth specifications of Table 1-1. If the instrument will not pass this test, perform the IF Filter Alignment (Paragraph 5-70) of the Adjustment Procedures.

Equipment Required:

Frequency Synthesizer (-hp- Model 3320B, 50 ohms)
50 Ohm Termination (-hp- 11048C)

a. Position the following front panel controls. (Only those controls printed in **BOLD** require a change from the previous test.)

ADAPTIVE SWEEP.....OFF
DISPLAY.....All pushbuttons released
**AMPLITUDE MODE...LOG 10 dBv/DIV**
AMPLITUDE REF LEVEL....NORMAL
dBV/LIN−dBm 600Ω.....dBV/LIN
**INPUT SENSITIVITY.....−20 dB**
VERNIER (Amplitude).....CAL
**START−CTR.....CTR**
RESOLUTION BANDWIDTH.....300 Hz
DISPLAY SMOOTHING.....MIN
**FREQUENCY SPAN/DIV.....50 Hz**
SWEEP TIME/DIV.....0.2 SEC
**SWEEP MODE.....RESET**
**FREQUENCY.....10000 Hz**
**SWEEP MODE.....MANUAL**

Option 002: Set dBm 900 Ω/LIN−dBm 600Ω switch to dBm 900Ω; set INPUT MODE switch to UNBAL.

b. By alternately pressing and releasing DISPLAY-CLEAR WRITE while adjusting MANUAL VERNIER, center the display indication (a narrow spike).

c. Connect a properly terminated frequency synthesizer to the input of the 3580A. Adjust the synthesizer for a 10 kHz −20 dBV signal (−20 dBm 900Ω for Option 002) output. (See Table 5-3.) Momentarily press DISPLAY-CLEAR WRITE.

d. Adjust the FINE FREQUENCY control for a peak display indication.

**Table 5-10. Frequency Response Tests.**

| INPUT SENSITIVITY (according to white marker) | INPUT LEVEL | | 10 kHz | DISPLAY INDICATION (0 dB = full scale; 1 dB/DIV) | | | | |
|---|---|---|---|---|---|---|---|---|
| | STD. | OPT. 002 900 Ω | | 10 Hz | 20 Hz | 1 kHz | 20 kHz | 50 kHz |
| 0 dB | 0 dBV | 0 dBm | CAL | −1 dB ± .3 dB | −1 dB ± .3 dB | −1 dB ± .3 dB | −1dB ± .3 dB | −1 dB ± .3 dB |
| −10 dB | −10 dBV | −10 dBm | CAL | −1 dB ± .5 dB | −1 dB ± .3 dB | −1 dB ± .3 dB | −1 dB ± .3 dB | −1 dB ± .5 dB |
| −20 dB | −20 dBV | −20 dBm | CAL | −1 dB ± .5 dB | −1 dB ± .3 dB | −1 dB ± .3 dB | −1 dB ± .3 dB | −1 dB ± .5 dB |
| −30 dB | −30 dBV | −30 dBm | CAL | −1 dB ± .5 dB | −1 dB ± .3 dB | −1 dB ± .3 dB | −1 dB ± .3 dB | −1 dB ± .5 dB |
| −40 dB | −40 dBV | −40 dBm | CAL | −1 dB ± .5 dB | −1 dB ± .3 dB | −1 dB ± .3 dB | −1 dB ± .5 dB | −1 dB ± .5 dB |

e. Reposition the following front panel controls:

AMPLITUDE MODE.....LOG 1 dB/DIV

f. Readjust the FINE FREQUENCY control for a peak display indication of the 10 kHz input. Adjust CAL 10 kHz for a full scale 0 dB display, if not already so adjusted.

g. Slowly rotate MANUAL VERNIER CW until the display dot has dropped 3 dB in amplitude. (Remember, the display is calibrated 1 dB/DIV). This is the upper 3 dB point of the filter.

h. Read and record the frequency in the FREQUENCY DISPLAY. Rotate the MANUAL VERNIER CCW until the display dot has reached the lower 3 dB point of the filter.

i. Subtract the frequency now in the FREQUENCY DISPLAY from the previously recorded frequency. The result should be 300 Hz ± 45 Hz.

j. Repeat Steps f through i for the 100 Hz, 30 Hz and 10 Hz filters. See Table 5-11 for the start frequency of the source, FREQUENCY setting, RESOLUTION BANDWIDTH, FREQ. SPAN/DIV, and the test limits. At the start of each new bandwidth setting, always center the display with MANUAL VERNIER, and adjust the FREQUENCY controls, and CAL 10 kHz for a full scale, peak display at the appropriate start frequency. Then make the appropriate adjustments for the upper and lower 3 dB points.

**Table 5-11. 300 Hz thru 10 Hz Bandwidth Tests.**

| SOURCE START FREQ. and 3580A FREQUENCY | RESOLUTION BANDWIDTH | FREQ. SPAN/DIV | 3 dB BANDPASS TEST LIMITS |
|---|---|---|---|
| 10 kHz | 300 Hz | 50 Hz | 300 Hz ± 45 Hz |
| 1 kHz | 100 Hz | 50 Hz | 100 Hz ± 15 Hz |
| 1 kHz | 30 Hz | 10 Hz | 30 Hz ± 4.5 Hz |
| 1 kHz | 10 Hz | 5 Hz | 10 Hz ± 1.5 Hz |

k. Using Table 5-12 and the same technique used for the 300 Hz, 100 Hz, 30 Hz, and 10 Hz Bandwidths, test the 60 dB Bandpass of the 3 Hz and 1 Hz filters. However, use AMPLITUDE MODE.....LOG 10 dB/DIV and measure the frequency difference between the 60 dB points. As before, always adjust the FINE FREQUENCY control and CAL 10 kHz for a peaked full scale display before attempting to measure the 60 dB bandwidths. If the display is noisy at the 60 dB points, use DISPLAY SMOOTHING.....MAX. Note: The display is now calibrated 10 dB/DIV.

**Table 5-12. 3 Hz and 1 Hz Bandwidth Tests.**

| SOURCE START FREQ. and 3580A FREQUENCY | RESOLUTION BANDWIDTH | FREQ. SPAN/DIV | 60 dB BANDPASS TEST LIMITS |
|---|---|---|---|
| 1 kHz | 3 Hz | 5 Hz | 30 Hz ± 4.5 Hz |
| 1 kHz | 1 Hz | 5 Hz | 10 Hz ± 1.5 Hz |

## 5-30. Dynamic Range Tests (Noise Tests). Δ16

5-31. Dynamic range is the ability of the instrument to detect large and small signals and display them simultaneously. The range and accuracy of the amplifiers is a determing factor. This specification was tested in the Amplitude Tests (Paragraph 5-18). The instrument noise and spurious responses are the other determining factors of dynamic range. These tests verify these parameters. If the instrument will not pass any of these tests, see Section VII for troubleshooting information. There are no adjustments for these specifications.

Equipment Required:

Frequency Synthesizer (-hp- Model 3320B, 50 ohms)
50 Ohm Termination (-hp- 11048C)
Bandpass Filter (White Model 2640)
Proper input resistor for filter (550 Ω ± 10%, Part No. 0698-4456)
1% 1 kΩ film resistor (-hp- Part No. 0757-0280)

### 5-32. Noise Level Tests.

a. Connect the 1 kΩ resistor across the INPUT terminals of the 3580A. Disconnect all signal sources.

b. Position the following front panel controls: (Only those controls printed in **BOLD** require a change from the previous tests).

ADAPTIVE SWEEP.....OFF
DISPLAY.....All pushbuttons released
AMPLITUDE MODE..LOG 10 dBV/DIV
AMPLITUDE REF LEVEL....NORMAL
dBV/LIN – dBm 600Ω.....dBV/LIN
**INPUT SENSITIVITY.....–70 dB**
VERNIER (Amplitude).....CAL (Fully CW)
**START – CTR.....START**
**RESOLUTION BANDWIDTH.....300 Hz**
**DISPLAY SMOOTHING.....MAX**
**FREQ. SPAN/DIV.....5 kHz**
**SWEEP TIME/DIV.....5 SEC**
**SWEEP MODE.....RESET**
**FREQUENCY.....00000 Hz**
SWEEP MODE.....MANUAL

Option 002: Set dBm 900 Ω/LIN – dBm 600 Ω switch to dBm 900 Ω; set INPUT MODE switch to UNBAL.

c. Adjust the MANUAL VERNIER full CCW. Adjust the FINE FREQUENCY control for a peak display.

d. Adjust the MANUAL VERNIER for a display indiction at 10 kHz (2 major divisions from left graticule). Momentarily press the following control:

DISPLAY.....CLEAR WRITE

e. The display indication should always be less than –130 dB (6 major divisions down from top graticule, since Full Scale = –70 dB).

f. Reposition the following front panel control:

RESOLUTION BANDWIDTH.....30 Hz

g. Momentarily press the following control:

DISPLAY.....CLEAR WRITE

The display indication should be less than −140 dB (7 major divisions down from top graticule).

h. Reposition the following control:

FREQ. SPAN/DIV.....0.1 kHz

i. Adjust MANUAL VERNIER full CCW. Adjust the FINE FREQUENCY control for a peak display indication.

j. Adjust MANUAL VERNIER for a display indication at 100 Hz (1 major division from leftmost graticule). Momentarily press the following control:

DISPLAY.....CLEAR WRITE

k. The display indication should be less than −132 dB (6.2 major divisions down from top graticule).

l. Adjust MANUAL VERNIER for a display indication of 1 kHz (far right graticule). Momentarily press the following control:

DISPLAY.....CLEAR WRITE

m. The display indication should be less than −140 dB (7 major divisions down from top graticule).

n. Reposition the following control:

RESOLUTION BANDWIDTH.....1 Hz

Momentarily press the following control:

DISPLAY.....CLEAR WRITE

o. The display indication should be less than −150 dB (8 major divisions down from top graticule).

p. Readjust MANUAL VERNIER for a display indication at 100 Hz (1 major division from leftmost graticule). Momentarily press the following control:

DISPLAY.....CLEAR WRITE

q. The indication should be less than −143 dB (7.3 major divisions down from top graticule).

r. Reposition the following controls:

DISPLAY SMOOTHING.....MIN
FREQ. SPAN/DIV.....5 Hz

s. Adjust MANUAL VERNIER FULL CCW. Momentarily press the following front panel control:

DISPLAY.....CLEAR WRITE

t. Adjust FINE FREQUENCY control for a peak response at the leftmost graticule. Reposition the following front panel control:

DISPLAY SMOOTHING.....MAX

u. Adjust the MANUAL VERNIER for a display indication at 10 Hz (2 major divisions from leftmost graticule). Momentarily press the following control:

DISPLAY.....CLEAR WRITE

v. The display indication should be less than −135 dB (6.5 major divisions down from top graticule). Remove the 1 kΩ resistor from the input terminals.

**5-33. Noise Sideband Test.**

a. Reposition the following controls:

SWEEP MODE.....RESET
INPUT SENSITIVITY.....CAL
FREQUENCY.....10000 Hz
START-CTR.....CTR
DISPLAY SMOOTHING.....MIN
FREQ. SPAN/DIV.....5 Hz
SWEEP TIME/DIV.....10 SEC
SWEEP MODE.....MAN

b. By alternately pressing and releasing DISPLAY-CLEAR WRITE while adjusting MANUAL VERNIER, center the display indication (a narrow spike).

c. Adjust the FINE FREQUENCY control for a peak display of this spike.

d. Reposition the following controls:

SWEEP MODE.....SING

e. After waiting for the sweep to be completed (100 sec.), verify that the noise on the display ± 10 Hz (± 2 major divisions) away from the 10 kHz CAL signal (in center of display) is at least 70 dB below the CAL signal.

**5-34. Spurious Response Test.**

a. Reposition the following controls:

INPUT SENSITIVITY.....−20 dB
START-CTR.....START
RESOLUTION BANDWIDTH.....30 Hz
FREQ. SPAN/DIV.....2 kHz
SWEEP TIME/DIV.....5 SEC
SWEEP MODE.....RESET
FREQUENCY.....00000 Hz

b. Momentarily press:

DISPLAY.....CLEAR WRITE

c. Reposition the following controls:

SWEEP MODE.....MANUAL

and momentarily press:

DISPLAY.....CLEAR WRITE

d. Connect the frequency synthesizer (use proper output impedance needed for the bandpass filter) to the input of the bandpass filter. Adjust the filter for a 5 kHz center frequency and adjust the synthesizer for a 5 kHz output. (For a 50 ohm source and the White 2640 filter, connect a 550 Ω resistor (± 10%) in series between the filter and synthesizer. This gives the 600 Ω source impedance required by the White filter (See Figure 5-3).

e. Connect the output of the filter to the input of the 3580A. Always terminate properly if required. (The White Model 2640 filter requires no output termination. See Figure 5-3).

f. Adjust MANUAL VERNIER for a display indication at 5 kHz (2½ major divisions from left graticule). Adjust the source level for a −20 dBV (full scale) input to the 3580A (For the White 2640 filter and a 50Ω source, this corresponds to −16.99 dBm 50 Ω level on the source). Readjust MANUAL VERNIER for a peak display. Adjust CAL 10 kHz for a full scale display.

g. Reposition the following controls:

SWEEP MODE.....SING

h. After waiting for one complete sweep (50 sec.) verify that all responses other than the zero response are at least 80 dB below the 5 kHz response.

**5-35. Line Related Spurious Test.**

Specification:

> 80 dB below input reference level or −140 dBV (0.1 μV).

a. Disconnect the Synthesizer and Bandpass Filter from the 3580A Input. Turn off all unnecessary equipment located near the 3580A. This especially includes large current users such as soldering irons, blowers, moters, etc.

b. Using a short piece of wire, connect a short across the 3580A INPUT terminals.

c. Reposition the following controls:

INPUT SENSITIVITY.....−70 dB
RESOLUTION BANDWIDTH.....3 Hz
FREQ. SPAN/DIV.....5 Hz
SWEEP MODE.....MAN
MANUAL VERNIER.....centered
DISPLAY SMOOTHING.....MAX
START-CTR.....CTR

**NOTE**

*If the power-line frequency is 50 Hz, substitute the following 3580A frequencies for Steps d and f.*

*Step d: 50 Hz*
*Step f: 100 Hz*
*Step f: 150 Hz*

d. With the FINE FREQUENCY control, tune the 3580A frequency to 60 Hz.

e. Press CLEAR WRITE, then slowly turn the MANUAL VERNIER to obtain a peak reading. The peak should be more than 70 dB below full scale (−140 dB).

f. Repeat Steps d and e substituting 120 Hz, and 180 Hz for the 3580A frequencies.

**NOTE**

*If the instrument fails this test double check that the input short is as small as possible, that all power line current is kept at a minimum, and that all covers are tightly secured on the 3580A*

**5-36. IF Feedthru and Zero Beat Response Tests. Δ16**

5-37. These tests verify the ability of the instrument to reject a 100 kHz signal at the input and also how well the Zero Beat Response is suppressed. Proceed to the

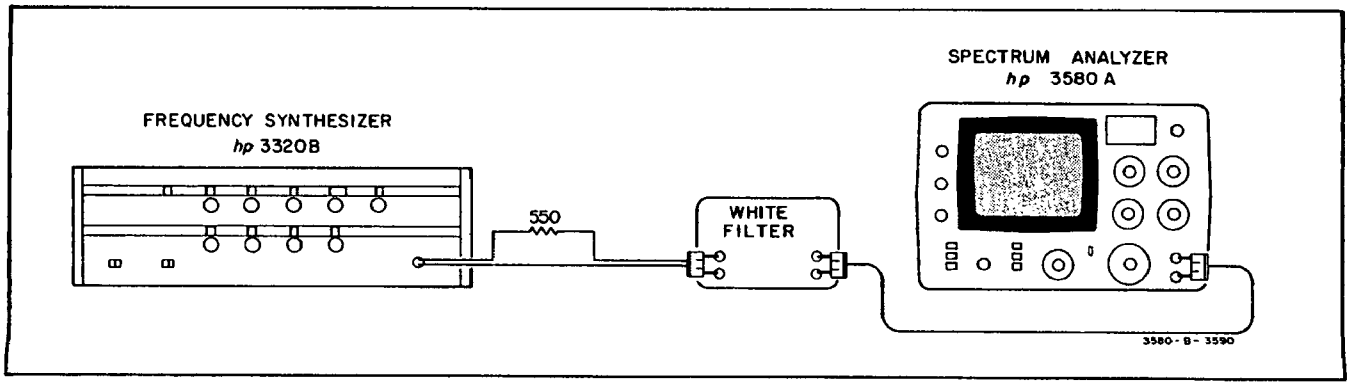


**Figure 5-3. Spurious Response Test.**

Mixer Balance Adjustments (Paragraph 5-81) of the Adjustment Procedures if the Zero Beat Response is too large. Proceed to Section VII for troubleshooting information if there is too much IF Feedthru.

Equipment Required:

Frequency Synthesizer (-hp- Model 3320B, 50 ohm)

a. Reconnect the synthesizer to the 3580A. Do not terminate. Adjust the source for a 10 volt 100 kHz output (+ 26.99 dBm 50 ohms setting on 3320B and unterminated).

b. Position the following front panel controls: (Only those controls printed in **BOLD** require a change from the previous test).

SWEEP MODE.....RESET
ADAPTIVE SWEEP.....OFF
DISPLAY.....All pushbuttons released
AMPLITUDE MODE..LOG 10 dBV/DIV
AMPLITUDE REF LEVEL....NORMAL
dBV/LIN-dBm 600 Ω.....dBV/LIN
**INPUT SENSITIVITY.....+20 dB**
VERNIER (Amplitude).....CAL
(Fully CW)
START-CTR ..... START
RESOLUTION BANDWIDTH.....3 Hz
**DISPLAY SMOOTHING.....MIN**
**FREQ. SPAN/DIV.....20 Hz**
SWEEP TIME/DIV.....5 SEC
FREQUENCY.....00000 Hz
SWEEP MODE.....MANUAL

Option 002: Set dBm 900 Ω/Lin-dBm 600 Ω switch to dBm 900 Ω; set INPUT MODE switch to UNBAL.

c. Adjust MANUAL VERNIER for a response in the center of the screen. The display indication should be at least 70 dB below full scale to verify the IF Feedthru specification of Table 1-1. If the instrument fails this test, see Section VII for troubleshooting information.

d. Disconnect the synthesizer. Reposition the following front panel controls:

RESOLUTION BANDWIDTH.....300 Hz
FREQ. SPAN/DIV.....5 kHz
SWEEP MODE.....RESET

e. Momentarily press the following front panel control:

DISPLAY.....CLEAR WRITE

f. Adjust FINE FREQUENCY control for a maximum display indication on the left graticule. This display should be at least 30 dB (3 major divisions) below full scale to verify the Zero Beat Response specification of Table 1-1. If the instrument fails this test, go to the Mixer Balance Adjustments (Paragraph 5-81) of the Adjustment Procedures.

## 5-38. Input Impedance Tests. Δ16

5-39. These tests verify the Input Impedance characteristics of Table 1-2. Since there is no adjustment for this parameter, see Section VII for troubleshooting information if the instrument fails this test.

Equipment required:

1 MΩ ± 1% film resistor (-hp- Part No. 0757-0344)

a. Position the following front panel controls. (Only those controls printed in **BOLD** require a change from the previous tests.)

ADAPTIVE SWEEP.....OFF
DISPLAY.....All pushbuttons released
AMPLITUDE MODE...LOG 1 dBV/DIV
AMPLITUDE REF LEVEL....NORMAL
dBV/LIN-dBm 600 Ω.....dBV/LIN
**INPUT SENSITIVITY.....0 dB**
VERNIER (Amplitude).....CAL
(Fully CW)
START-CTR ..... START
DISPLAY SMOOTHING.....MIN
**RESOLUTION BANDWIDTH.....10 Hz**
**FREQ. SPAN/DIV.....1 kHz**
SWEEP TIME/DIV.....5 SEC
SWEEP MODE.....RESET
FREQUENCY.....00000 Hz
SWEEP MODE.....MANUAL

Option 002: Set dBm 900Ω/LIN-dBm 600Ω switch to dBm 900 Ω; set INPUT MODE switch to UNBAL.

b. Connect the rear panel TRACKING OSC OUT to the front INPUT terminals of the 3580A. Adjust the rear panel TRACKING OSC LEVEL control fully CW. Adjust MANUAL VERNIER for a 1 kHz display indication (1 major division from left graticule). Readjust the TRACKING OSC LEVEL control for a full scale 0 dB display. Momentarily press the following control:

DISPLAY.....CLEAR WRITE

c. Connect the 1 MΩ resistor in series between the TRACKING OSC OUT and front panel INPUT terminals. The display indication should drop 6 dB ± .3 dB (6 major divisions ± .3 major divisions) to verify an input impedance of 1 MΩ.

d. Reposition the following front panel control:

INPUT SENSITIVITY.....−10 dB

e. Readjust the rear panel TRACKING OSC LEVEL control for a full scale display. Adjust MANUAL VERNIER for a display indication at 10 kHz (far right display graticule). DO NOT REMOVE 1 MΩ RESISTOR. Momentarily press the following front panel control:

DISPLAY.....CLEAR WRITE

f. 1) Std. 3580A: The amplitude should drop 3 dB ± 1 dB, verifying that the input shunt capacitance is 30 pF, nominal.

2) Option 002: The amplitude should drop 4 dB ± 1 dB, verifying that the input shunt capacitance is 40 pF, nominal.

g. Disconnect the cable connected between the TRACKING OSC OUT and the front panel INPUT terminals.

### 5-40. Output Tests.

5-41. These tests verify the Output specifications of the 3580A listed in Table 1-1.

Equipment Required:

Digital Multimeter (-hp- Model 34740/34702)
Distortion Analyzer (-hp- Model 333A)

### 5-42. TRACKING OSC OUTPUT Tests.

a. Position the following front panel controls. (Only those controls printed in **BOLD** require a change from the previous tests).

ADAPTIVE SWEEP.....OFF
DISPLAY.....All pushbuttons released
**AMPLITUDE MODE..LOG 10 dBV/DIV**
AMPLITUDE REF LEVEL....NORMAL
dBV/LIN-dBm 600 Ω.....dBV/LIN
**INPUT SENSITIVITY.....+20 dB**
VERNIER (Amplitude).....CAL (Fully CW)
START-CTR ..... START
RESOLUTION BANDWIDTH.....10 Hz
DISPLAY SMOOTHING.....MIN
**FREQ. SPAN/DIV.....5 kHz**
SWEEP TIME/DIV.....5 SEC
**SWEEP MODE.....RESET**
FREQUENCY.....00000 Hz

Option 002: Set dBm 900 Ω/LIN-dBm 600 Ω switch to dBm 900 Ω; set INPUT MODE switch to UNBAL.

b. Connect the multimeter (AC mode 100 volt range) to the rear panel TRACKING OSC OUT. Adjust the FREQUENCY controls for 50 Hz (300 Hz for Option 002). Adjust the rear panel TRACKING OSC LEVEL control for a 2.00 volt reading on the multimeter.*

c. Adjust the FREQUENCY control to 50.0 kHz (20.0 kHz for Option 002 instruments). Verify that the multimeter reads 2.00 volts ± .06 volts (± .1 volts for Option 002 instruments).

d. Reposition the following front panel controls:

AMPLITUDE MODE.....LIN
INPUT SENSITIVITY.....2 V
FREQUENCY.....00000 Hz
RESOLUTION BANDWIDTH.....30 Hz
SWEEP MODE.....MANUAL

e. Connect the rear panel TRACKING OSC OUT to the front panel INPUT terminals. Momentarily press the following control:

DISPLAY.....CLEAR WRITE

f. By alternately pressing and releasing DISPLAY-CLEAR WRITE while adjusting MANUAL VERNIER, center the display indication (a narrow spike).

g. Adjust the rear panel TRACKING OSC LEVEL control for a full scale 2 V display. Reposition the following front panel control:

RESOLUTION BANDWIDTH.....3 Hz

h. The display indication should drop no lower than 1 V (5 major divisions) to verify the frequency accuracy of the tracking oscillator. If the tracking oscillator frequency is out of tolerance, remove the top cover and adjust A2C4 for a peak display indication.

i. Reposition the following front panel control:

FREQ. SPAN/DIV.....0.1 kHz

j. Adjust MANUAL VERNIER for a 1 kHz display indication (indication on far right display graticule). Momentarily press the following front panel control:

DISPLAY.....CLEAR WRITE

k. Connect the TRACKING OSC OUT to the INPUT of the distortion analyzer. Adjust the TRACKING OSC LEVEL control fully CW.

l. Reference the TRACKING OSC OUT to 0 dB on the distortion analyzer. (For the -hp- 333A Distortion Analyzer, position the following controls:

FUNCTION.....SET LEVEL
METER RANGE.....0 dB
FREQUENCY RANGE.....X100
FREQUENCY.....10 (1 kHz)
HIGH PASS FILTER.....OUT

Adjust the SENSITIVITY and VERNIER controls of the distortion analyzer for a 0 dB meter indication. Set the distortion analyzer FUNCTION switch to DISTORTION.)

m. Measure the distortion in dB by nulling the distortion analyzer.

n. Adjust the FREQUENCY and BALANCE controls for a meter null. Use automatic nulling if available.

*For measurements below 50 Hz, use a low frequency Digital Voltmeter such as the -hp- Model 3480/3484 with true rms.

o. The total distortion indication should be at least 40 dB below the reference level. If it is not, perform the Mixer Balance Adjustments (Paragraph 5-81). Disconnect the distortion analyzer from the 3580A.

**5-43. RECORDER Output Tests.**

a. Connect the multimeter (DC mode, 100 volt range) to the rear panel X-AXIS RECORDER output. Adjust MANUAL VERNIER fully CCW.

b. The multimeter should read 0 Vdc ± .15 V.

c. Adjust the MANUAL VERNIER fully CW. The multimeter reading should be 5 Vdc ± .15 V.

d. Reposition the following front panel control:

RESOLUTION BANDWIDTH.....30 Hz

e. Reconnect the TRACKING OSC OUTPUT to the INPUT terminals of the 3580A and readjust the rear panel LEVEL control for a full scale display (on the far right graticule). Use DISPLAY-CLEAR WRITE, if necessary, to clear all unwanted data from the display.

f. Connect the multimeter (DC mode, 100 volt range) to the rear panel Y-AXIS RECORDER output. The multimeter reading should be 5.00 Vdc ± .15 V.*

g. Disconnect the TRACKING OSC OUT from the INPUT terminals. The voltmeter should now read 0 volts dc ± .15 V. Disconnect the multimeter from the 3580A.*

**5-44. Balanced Input Tests (Option 002 only). Δ16**

5-45. These tests verify the Balanced Input specifications for the Option 002 instrument. If the instrument fails these tests, see Section VII for troubleshooting information since there are no adjustments for the parameters tested.

Equipment Required:

Frequency Synthesizer (-hp- Model 3320B, 50 ohm)
50 Ohm Termination (-hp- 11048C)
Two 453 ohm 1% resistors (-hp- Part No. 0698-3510)

**5-46. Common Mode Rejection Test.**

a. Position the following front panel controls:

ADAPTIVE SWEEP.....OFF
DISPLAY.....All pushbuttons released
**AMPLITUDE MODE..LOG 10 dBV/DIV**
AMPLITUDE REF LEVEL....NORMAL
dBm 900Ω/
LIN-dBm 600 Ω.....dBm 900 Ω/LIN
**INPUT SENSITIVITY.....0 dB**
VERNIER (Amplitude).....CAL
(Fully CW)
**INPUT MODE.....BRDG**
START-CTR.....START
**RESOLUTION BANDWIDTH.....3 Hz**
DISPLAY SMOOTHING.....MIN
**FREQ. SPAN/DIV.....10 Hz**
SWEEP TIME/DIV.....5 SEC
**SWEEP MODE.....RESET**
FREQUENCY.....00000 Hz
SWEEP MODE.....MAN

b. Adjust the frequency synthesizer for a 60 Hz, +5 dBm 900 Ω output (+ 17.55 dBm/50 ohms). Connect the synthesizer (properly terminated) to the INPUT of the 3580A.

c. Slowly adjust MANUAL VERNIER to the 60 Hz signal which will appear as a peak on the sixth major division from the left. Momentarily press the following front panel control:

DISPLAY.....CLEAR WRITE

d. Adjust the VERNIER (Amplitude) for a full scale 0 dB display.

e. Disconnect the synthesizer from the 3580A and connect two 453 ohm resistors in series between the INPUT terminals. (See Figure 5-4.)

f. Connect the synthesizer to the junction of the two resistors and to the chassis on the rear panel as shown in Figure 5-4. (Do not change the synthesizer amplitude setting.)

g. The display indication on the 3580A should be at least 70 dB below full scale (10 dB/DIV).

**5-47. Frequency Response Test.**

a. Disconnect the resistors from the 3580A INPUT terminals and reconnect the synthesizer (properly terminated in 50 ohms). Adjust the source for a 0 dBm 900 Ω (+12.55 dBm 50 Ω) 10 kHz signal.

b. Reposition the following front panel controls:

SWEEP MODE.....RESET
FREQUENCY.....10000 Hz
START-CTR.....CTR
VERNIER (Amplitude).....Fully CW
SWEEP MODE.....MAN

c. By alternately pressing and releasing DISPLAY-CLEAR WRITE while adjusting MANUAL VERNIER, center the display indication (a narrow spike). Adjust the FINE FREQUENCY control for a peak display of the 10 kHz input signal.

*If the Y-Axis output is out of tolerance, perform the Linear and Log Gain Adjustments (Paragraph 5-77).

d. Reposition the following front panel control:

AMPLITUDE MODE.....LOG 1 dB/DIV

e. Readjust the FINE FREQUENCY control for a peak display indication. Adjust VERNIER (Amplitude) for a full scale −1 dB display indication (1 major division down from full scale).

f. Adjust the frequency synthesizer and 3580A FREQUENCY to the frequencies given by Table 5-13. Always peak the display indication with the FINE FREQUENCY control and check for proper amplitude accuracy.

**Table 5-13. Balanced Input Frequency Response Tests.**

| FREQUENCY | INPUT 900 Ω | DISPLAY ACCURACY |
|---|---|---|
| 10 kHz | 0 dBm | CAL to −1 dB |
| 40 Hz $\Delta_1$ | 0 dBm | −1 dB ± .5 dB (± .5 major divisions) |
| 300 Hz | 0 dBm | −1 dB ± .5 dB |
| 1 kHz | 0 dBm | −1 dB ± .5 dB |
| 20 kHz | 0 dBm | −1 dB ± .5 dB |

$\Delta_1$ See Backdating.

## 5-48. ADJUSTMENT PROCEDURE.

5-49. This portion of Section V contains complete Adjustment Procedures for the Model 3580A Specturm Analyzer:

POWER SUPPLY CHECKS AND ADJUSTMENTS (Paragraph 5-53).

DISPLAY ADJUSTMENTS (Paragraph 5-68).

SWEEP ALIGNMENT (Paragraph 5-63). $\Delta_{16}$

LINE GENERATOR ADJUSTMENTS (Paragraph 5-68).

I.F. FILTER ALIGNMENT (Paragraph 5-70).

AMPLITUDE CALIBRATION (Paragraph 5-74).

MIXER BALANCE ADJUSTMENTS (Paragraph 5-81).

ADAPTIVE SWEEP MARKER ADJUSTMENT (Paragraph 5-84).

## 5-50. TEST POINT AND ADJUSTMENT LOCATIONS.

5-51. Test point and adjustment locations are shown in Figure 5-9 at the end of Section V. Most of the test points and adjustments are easily accessible with the outer covers removed. In some cases it will be necessary to remove the inner cover and place the appropriate pc boards on extenders. Set the 3580A POWER switch to OFF when removing or replacing a pc assembly.

5-52. The Adjustment Procedure is written in a logical sequence. If the instrument is known to be completely out of calibration, the sequence should be strictly followed. Many times, however, only certain adjustments need to be made. The Performance Tests have been written in such a manner that they will lead you to the proper adjustment. In addition, a brief description of each adjustment is given. Read through the procedures carefully, doing only those that are necessary . Take careful note of any previous adjustments which may affect a future adjustment.

**NOTE**

*Always test the low voltage power supply before performing any calibration. All test measurements should be made with respect to circuit ground, which is available at any point on the instrument chassis. Adjustments should not be made until the instrument has had one hour of continuous warm-up.*

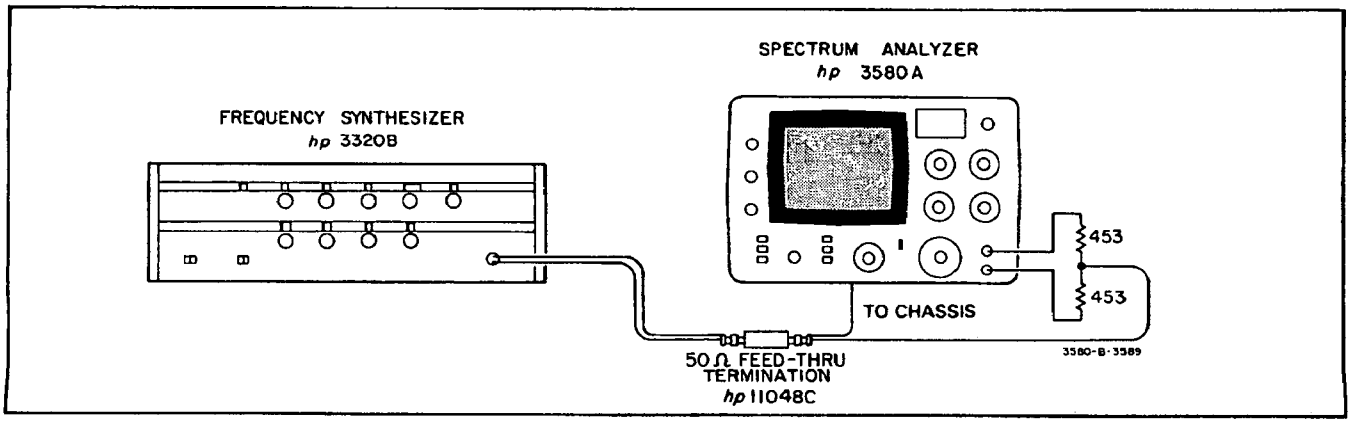


**Figure 5-4. Common Mode Rejection Test.**

## 5-53. POWER SUPPLY TESTS AND ADJUSTMENTS.

5-54. These tests and adjustments check the operation of the low voltage +10 Vdc and −10 Vdc regulated power supplies and set the level of the high voltage −2915 Vdc regulated power supply. The low voltage power supply tests should be performed prior to all other adjustments. In addition, the High Voltage −2915 Vdc power supply voltage should be tested if any of its components were changed or if the instrument will not pass the Frequency Tests (Paragraph 5-9) or Amplitude Tests (Paragraph 5-18) of the Performance Tests.

### 5-55. Recommended Test Equipment:

AC/DC Digital Multimeter (-hp- Model 34740A and 34702A plug-on)
High Voltage DC Probe for above multimeter, calibrated to 1000 V DC Standard (-hp- Model 11045A Probe and -hp- Model 740B DC Standard)

or

Precision .1% High Voltage Probe and appropriate DVM (-hp- 3440A-K05 High Voltage Probe and -hp- Model 3440A DVM)

### 5-56. ± 10 Volt Power Supply Tests.

a. Connect the digital multimeter (DC mode 10 volt range) to the red lead (pin 12) at the A13 board connector. The multimeter reading should be + 10.000 V ± .050 V. If it is not, refer to the Factory-Selected Components information in Section VII.

b. Connect the digital multimeter (DC mode 10 volt range) to the violet lead (pin 10) at the A13 board connector. The dc voltage present should be − 10.000 V ± .050 V.

c. Test the ac ripple voltage present on the above two leads with the digital multimeter. There should be less than .1 mV ac difference between the reading obtained on each lead and that obtained with a short circuit to the multimeter.

### 5-57. High Voltage Power Supply Tests.

**WARNING**

*The voltages involved in the following measurements may cause serious injury or even death. USE EXTREME CAUTION.*

a. If a precision .1% high voltage dc probe is available, omit this step and proceed to Step b. Otherwise, calibrate your high voltage probe to the digital multimeter (DC mode) and note the reading obtained when measuring 1000 volts on the DC Standard. Multiply this reading by 2.915 to obtain the proper reading for 2915 volts. Record your calculation.

**NOTE**

*Always select a range on the multimeter so that a range change is not necessary for reading 2915 volts. For instance, when using the -hp- 34740A/34702A Multimeter and 11045A probe, put the 34702A on the 10 volt range, not the 1 volt range.*

b. Turn the 3580A POWER switch to OFF and remove the gray metal shield on the rear panel of the 3580A. Remove the plastic shield on the CRT connector to expose the wiring terminals. Turn the 3580A POWER switch to ON (AC). HIGH VOLTAGE LEADS ARE NOT EXPOSED.

c. With the high voltage probe and digital multimeter, measure the dc voltage present at pin 2 (yellow lead) of the CRT connector. Adjust A8R1 (HV ADJ.) for a voltage reading of about −2900 volts. If you calibrated your own probe as described in Step A, adjust the voltage to the appropriate value, ± 1%.

**NOTE**

*This adjustment affects the Sweep Alignment (Paragraph 5-63), as well as the Amplitude Calibration (Paragraph 5-74). Repeat the Frequency Tests (Paragraph 5-9) and Amplitude Tests (Paragraph 5-18) of the Performance Tests to determine if these additional adjustments need to be made.*

d. Turn the 3580A POWER switch to OFF and replace the two CRT shields removed in Step b). Turn the 3580A POWER switch back to ON (AC).

### 5-58. Display Adjustments.

5-59. These adjustments set the proper intensity limits, astigmatism, and trace alignment on the CRT. In many cases, these display parameters will require no adjustments.

### 5-60. Intensity Limit Adjustment.

a. Turn the 3580A power switch to OFF. Unplug the A13J3 connector. Remove the nylon access screw from the top of the high voltage power supply box. Turn the front panel INTENSITY control to the "9 o'clock" position. Turn the 3580A POWER switch back to ON (ac).

**WARNING**

*The voltages present inside the high voltage power supply box can cause serious injury. Never place an uninsulated conductive tool or object inside this box while the instrument is turned on.*

b. Using an insulated non-metallic tuning wand, such as -hp- Part No. 8710-0033, adjust A11R1 (INTENSITY LIMIT, inside high voltage power supply box) so that the dot on the CRT just disappears.

c. Replace the nylon screw in the high voltage power supply box.

**5-61. Astigmatism Adjustment.**

a. Adjust the front panel focus fully CCW. Turn the front panel INTENSITY adjust to about 10 or 11 o'clock so that the dot on the CRT is bright enough to see, but does not form a "halo".

b. Adjust A8R2 (ASTIG. ADJ.) for the largest circular dot.

c. Turn the 3580A POWER switch to OFF. Reconnect the connector to A13J3. Turn the 3580A POWER switch back to ON (ac).

**5-62. Trace Alignment Adjustment.**

a. Position the 3580A front panel controls as follows:

ADAPTIVE SWEEP.....Centered
DISPLAY.....All pushbuttons released
AMPLITUDE MODE....LOG 10 dB/DIV
APLITUDE REF LEVEL.....NORMAL
dBV/LIN-dBm 600 Ω.....dBV/LIN
INPUT SENSITIVITY.....−30 dB
VERNIER (Amplitude).....CAL (Fully CW)
FREQUENCY.....00000 Hz
START-CTR ..... START
RESOLUTION BANDWIDTH.....300 Hz
DISPLAY SMOOTHING.....MIN
FREQ. SPAN/DIV.....0.2 kHz
SWEEP TIME/DIV.....0.1 SEC
SWEEP MODE.....REP

Option 002: Set dBm 900 Ω/LIN-dBm 600 Ω switch to dBm 900 Ω; set INPUT MODE switch to UNBAL.

b. Adjust the front panel ADAPTIVE SWEEP for a line in the middle of the display. Adjust the front panel FOCUS control for the narrowest and sharpest line.

c. Adjust A13R5 (TRACE ALIGN) for a level trace. If unable to achieve this, switch A13S1 and readjust A13R5.

**5-63. Sweep Alignment.**

5-64. These adjustments calibrate the frequency sweep limts. They should be done if the Frequency Tests (Paragraph 5-9) or Sweep Tests (Paragraph 5-13) of the Performance Tests cannot be passed by the instrument. In addition, the adjustment should be made if the high voltage supply was previously adjusted.

**5-65. Recommended Test Equipment.**

Digital Multimeter (-hp- Model 34740A and 34702A plug-on)

Oscilloscope (-hp- Model 180A with 1801A and 1820A plug-ins)

**5-66. Linear Sweep Adjustments.**

a. Position the following front panel controls: (Only those controls printed in **BOLD** require a change from the previous adjustments).

**ADAPTIVE SWEEP.....OFF**
DISPLAY.....All pushbuttons released
AMPLITUDE MODE....LOG 10 dB/DIV
dBV/Lin-dBm 600 Ω.....dBV/LIN
**INPUT SENSITIVITY.....CAL**
VERNIER (Amplitude).....CAL (Fully CW)
START-CTR ..... START
RESOLUTION BANDWIDTH.....300 Hz
DISPLAY SMOOTHING.....MIN
**FREQ. SPAN/DIV.....0 kHz**
SWEEP TIME/DIV.....0.1 SEC
**SWEEP MODE.....RESET**
FREQUENCY.....00000 Hz

Option 002: Set dBm 900 Ω/LIN-dBm 600 Ω switch to dBm 900 Ω; set INPUT MODE switch to UNBAL.

b. Remove the inner circuit board shield (covering A2-A5). Connect the multimeter (DC mode 100 volt range) to A2TP4.

c. Adjust A2L1 (100 kHz VCO ADJ.) for a voltage reading on the multimeter between −1.5 V and −1.7 V. Record the reading.

d. Change the Sweep mode to LOG ZERO. Turn the fine FREQUENCY control fully CCW; turn the fine FREQUENCY control five revolutions CW. (This assures the control of being close to its center positions.)

e. Adjust A2L3 (100 kHz FREQ. ADJ.) for a FREQUENCY display of 00020 Hz ± 10 Hz; this is not a critical adjustment.

f. Change the sweep mode to RESET. Repeat Steps c through e until the voltage and frequency specifications are met.

g. Set the SWEEP MODE control to MANUAL and turn the MANUAL VERNIER control fully counterclockwise (CCW).

h. Reposition the following front panel control:

FREQ. SPAN/DIV.....5 kHz

i. Adjust A3R54 (INTEGRATOR BALANCE) for a frequency display of 00000 Hz ± 1 Hz.

j. Position the front panel MANUAL VERNIER control fully clockwise (CW).

k. Adjust A2R75 (BUFFER AMP GAIN ADJ.) for a display of 50000 Hz ± 1 Hz.

l. Adjust A2R100 (VCO RANGE SET) for a reading on the multimeter equal to that obtained in Step c (± 10 mV).

m. Repeat Steps k and l as necessary to meet the frequency and voltage specifications.

n. Position the front panel MANUAL VERNIER fully CCW.

o. Reposition the following front panel controls:

RESOLUTION BANDWIDTH.....300 Hz
SWEEP TIME/DIV.....2 SEC
SWEEP MODE.....REP
FREQUENCY.....00000 Hz

p. Adjust A13R1 (HORIZONTAL GAIN ADJ.) and A13R2 (HORIZONTAL POSITION ADJ.) for a full 10 cm display. The 10 kHz signal and its harmonics should fall on the proper graticule marking ± 1/2 minor divisions (2nd, 4th, 6th, 8th and 10th graticule from the left).

q. Connect the input of the oscilloscope to A3TP11. Set the oscilloscope input to dc coupling. Connect a jumper between A3TP3 and A3TP4.

r. Adjust the A3R14 (RAMP COMPARATOR BALANCE) so that the output of the ramp comparator (on scope) just changes states.

s. Remove the jumpers from the A3 board.

t. Reposition the following front panel control:

SWEEP TIME/DIV.....0.1 sec

u. Alternately press and release the STORE pushbutton, adjusting A8R4 (RAMP SIZE ADJ.) so that the 40 kHz harmonic of the CAL signal falls on the same point for both the STORE and non-STORE display modes.

v. Reposition the following front panel controls:

SWEEP MODE.....RESET
FREQUENCY.....50000 Hz
START-CTR ..... START

w. Record the reading in the FREQUENCY display.

x. Reposition the following front panel control:

START-CTR .....CTR

y. Adjust A16R52 so that the FREQUENCY reading is the same as that in Step w.

z. Repeat Steps v through y until there is no change in the FREQUENCY display when switching from START to CTR.

**5-67. Log Sweep Adjustments.**

a. Position the following front panel controls: (Only those controls printed in **BOLD** require a change from the previous adjustements).

ADAPTIVE SWEEP.....OFF
**DISPLAY.....All pushbuttons released**
AMPLITUDE MODE....LOG 10 dB/DIV
AMPLITUDE REF LEVEL....NORMAL
dBV/LIN-dBm 600 Ω.....dBV/LIN
INPUT SENSITIVIY.....CAL
VERNIER (Amplitude).....CAL
(Fully CW)
START-CTR ..... START
RESOLUTION BANDWIDTH.....300 Hz
DISPLAY SMOOTHING.....MIN
FREQ. SPAN/DIV.....5 kHz
**SWEEP TIME/DIV.....0.5 SEC**
**SWEEP MODE.....LOG ZERO**
FREQUENCY.....00020 Hz

Option 002: Set dBm 900 Ω/LIN-dBm 600 Ω switch to dBm 900 Ω; set INPUT MODE switch to UNBAL.

b. Momentarily push:

DISPLAY.....CLEAR WRITE

c. Reposition the following front panel control:

SWEEP MODE.....LOG

d. Allow the 3580A to make three complete sweeps. Then adjust A3R76 (20 kHz LOG SWEEP ADJ.) so that the 20 kHz harmonic of the CAL signal falls on the 20 kHz LOG SWEEP graticule.

**NOTE**

*After each adjustment of A3R76, wait for the 3580A to sweep through 20 kHz before attempting to readjust the setting.*

**5-68. Line Generator Adjustments. Δ16**

5-69. This adjustment properly aligns the line generator circuitry. The adjustment is usually not necessary, but should be done if components in the high voltage power supply are changed, or if the display exhibits overshoot to abrupt level changes.

a. Position the following front panel controls: (Only those controls printed in **BOLD** require a change from the previous adjustments).

**SWEEP MODE**.....**RESET**
ADAPTIVE SWEEP.....OFF
DISPLAY.....All pushbuttons released
AMPLITUDE MODE....LOG 10 dB/DIV
AMPLITUDE REF LEVEL....NORMAL
dBV/LIN-dBm 600 Ω.....dBV/LIN
INPUT SENSITIVITY.....CAL
VERNIER (Amplitude).....CAL (Fully CW)
**START-CTR**.....**CTR**
RESOLUTION BANDWIDTH.....300 Hz
DISPLAY SMOOTHING.....MIN
**FREQ. SPAN/DIV**.....**0.2 kHz**
**SWEEP TIME/DIV**.....**0.1 SEC**
**FREQUENCY**.....**10000 Hz**
**SWEEP MODE**.....**MANUAL**

Option 002: Set dBm 900 Ω/LIN-dBm 600 Ω switch to dBm 900 Ω; set INPUT MODE switch to UNBAL.

b. Adjust MANUAL VERNIER for a peak display signal. Note: The Amplitude VERNIER may have to be adjusted to keep the signal within the display limits.

c. Momentarily press:

DISPLAY.....CLEAR WRITE

d. Adjust A8C1 (LINE GENERATOR ADJ.) for a single round dot in the top center of the screen.

### 5-70. I.F. Filter Alignment. Δ16

5-71. This adjustment aligns the I.F. crystal filters for proper center frequency and symmetry. The TRACKING OSC is also precisely adjusted to 100 kHz. This adjustment should be done if the Bandwidth Tests (Paragraph 5-28) of the Performance Tests cannot be passed by the instrument. This adjustment will interact with the Amplitude Calibration (Paragraph 5-74). If it is performed, the Amplitude Tests (Paragraph 5-18) of the Performance Tests should be redone to verify whether any amplitude calibration is necessary.

Recommended Test Equipment:

Timer/Counter (-hp- Model 5328A)

### 5-72. Tracking Oscillator and Center Frequency Adjustments.

a. Position the following front panel controls: (Only those controls printed in **BOLD** require a change from the previous adjustments).

**SWEEP MODE**.....**RESET**
ADAPTIVE SWEEP.....OFF
DISPLAY.....All pushbuttons released
**AMPLITUDE MODE**.....**LINEAR**
AMPLITUDE REF LEVEL....NORMAL
dBV/LIN-dBm 600 Ω.....dBV/LIN
**INPUT SENSITIVITY**.....**+20 dB**
VERNIER (Amplitude).....CAL (Fully CW)
FREQUENCY.....10000 Hz
**START-CTR**.....**START**
DISPLAY SMOOTHING.....MIN
**RESOLUTION BANDWIDTH**.....**1 Hz**
**FREQ. SPAN/DIV**.....**0.5 kHz**
**SWEEP TIME/DIV**.....**0.5 SEC**
**SWEEP MODE**.....**MANUAL**

Option 002: Set dBm 900 Ω/LIN-dBm 600 Ω switch to dBm 900 Ω; set INPUT MODE switch to UNBAL.

b. Set the counter to the Frequency Mode and adjust the time base/multiplier for a measurement of 100 kHz with six digits of resolution (100.000 kHz). Adjust for maximum input sensitivity and either a zero trigger level or Preset. Select ac coupling on input. If using the -hp- Model 5328A Counter, the controls should be set to:

| | |
|---|---|
| Sample Rate: | CCW |
| Function: | FREQ A |
| Multiplier: | $10^6$ |
| Channel A: | Slope + |
| | AC |
| | Atten: 1 |
| | Level: Preset |
| BNC Input: | Sep. |
| | 1 MΩ |

c. Connect the counter Channel A input to A2TP3. Adjust the 3580A rear panel TRACKING OSC LEVEL fully CW. Connect the rear panel TRACKING OSC OUT to the front panel INPUT.

d. Adjust A2C4 (TRACKING OSCILLATOR 100 kHz FREQUENCY ADJ.) for a counter reading of 99.999 kHz to 100.001 kHz.

e. Center the CRT Trace with MANUAL VERNIER.

f. Remove the blue lead between A5TP1 and A5TP2 and connect a clip lead between A5TP1 and A5TP6. Momentarily press:

DISPLAY.....CLEAR WRITE

g. Adjust A5C13 (STAGE 5 100 kHz ADJ.) for a maximum display indication. Remove the clip lead on A5TP6 and connect to A5TP5. Adjust A5C10 (STAGE 4 100 kHz ADJ.) for a maximum display indication. Repeat this procedure for A5TP4 (adjust A5C7), A5TP3 (adjust A5C4), and A5TP2 (adjust A5C1).

h. Remove the cable between the TRACKING OSC OUT and the 3580A INPUT.

**5-73. Symmetry Adjustments.**

a. Position the following front panel controls: (Only those controls printed in **BOLD** require a change from the previous adjustments).

**SWEEP MODE.....RESET**
ADAPTIVE SWEEP.....OFF
DISPLAY.....All pushbuttons released
**AMPLITUDE MODE....LOG 10 dB/DIV**
AMPLITUDE REF LEVEL....NORMAL
dBV/LIN-dBm 600 Ω.....dBV/LIN
**INPUT SENSITIVITY.....CAL**
VERNIER (Amplitude).....CAL
(Fully CW)
FREQUENCY.....10000 Hz
**START-CTR.....CTR**
**RESOLUTION BANDWIDTH.....30 Hz**
DISPLAY SMOOTHING.....MIN
FREQ. SPAN/DIV.....0.5 kHz
**SWEEP TIME/DIV.....0.1 SEC**
**SWEEP MODE.....MANUAL**

Option 002: Set dBm 900 Ω/LIN-dBm 600 Ω switch to dBm 900 Ω; set INPUT MODE switch to UNBAL.

b. Reposition the internal circuit board shield over circuit boards A2-A4 (leave A5 partially uncovered). Reconnect A5TP1 to A5TP6 and adjust MANUAL VERNIER while pressing and releasing DISPLAY-CLEAR WRITE to obtain a spike display indication in the center of the CRT screen.

c. Fine tune the fine FREQUENCY control for a maximum display indication.

d. Reposition the following front panel controls:

RESOLUTION BANDWIDTH.....300 Hz
SWEEP MODE.....REP

e. Adjust A5C14 (STAGE 5 CRYSTAL BALANCE ADJ.) for equal and symmetrical skirts on the right and left halves of the CRT display.

f. Adjust A5C15 (STAGE 5 PEAK RESPONSE ADJ.) to move the peak to the center of the CRT screen. Recheck Step e and adjust A5C14 and A5C15 if necessary. See Figure 5-5 for a properly adjusted display.

g. Repeat Steps e and f for stages 4, 3, 2 and 1. Connect the appropriate test points and adjust the appropriate capacitors:

| Stage | Test Point Connection | Balance Cap | Peak Cap |
|---|---|---|---|
| Stage 4 | Connect A5TP1 to A5TP5 | C11 | C12 |
| Stage 3 | Connect A5TP1 to A5TP4 | C8 | C9 |
| Stage 2 | Connect A5TP1 to A5TP3 | C5 | C6 |
| Stage 1 | Connect A5TP1 to A5TP2 | C2 | C3 |

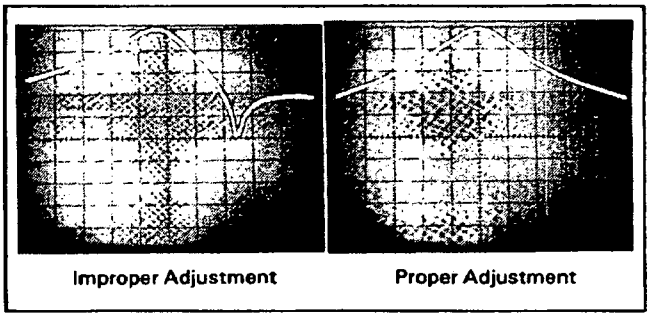


**Figure 5-5. Symmetry Adjustment.**

NOTE

*For the narrower bandwidth displays, positioning the internal circuit board shield completely over A2-A5 eliminates noise and improves symmetry.*

h. Reposition the following front panel controls:

AMPLITUDE MODE.....LINEAR
RESOLUTION BANDWIDTH.....30 Hz
FREQ. SPAN/DIV.....50 Hz
SWEEP MODE.....MANUAL

i. Adjust MANUAL VERNIER while pressing and releasing DISPLAY-CLEAR WRITE for a spike display indication in the center of the screen. Adjust the front panel FINE FREQUENCY control for a maximum display indication.

j. Reposition the following front panel controls:

RESOLUTION BANDWIDTH.....300 Hz
SWEEP MODE.....REP

k. Disconnect the clip lead between A5TP1 and A5TP2 and reconnect it between A5TP1 and A5TP6.

l. Readjust A5C15 for apeak at the center of the display.

m. Repeat Steps k and l, adjusting A5C12, A5C9, A5C6, and A5C3 with the clip lead connected to the same test points used in Step g for these same capacitors.

n. Remove the clip lead and reconnect the standard blue lead between A5TP1 and A5TP2.

**5-74. Amplitude Calibration. Δ16**

5-75. These adjustments properly calibrate the amplitude section of the 3580A. These adjustments should be made if the instrument fails the Amplitude Tests (Paragraph 5-18) of the Performance Tests. In addition, if the I.F. Filter Alignment (Paragraph 5-70), or the High Voltage Power Supply Adjustments (Paragraph 5-57) have been made, the Amplitude Tests should be performed again to determine if any amplitude calibration is necessary.

**5-76. Recommended Test Equipment.**

Frequency Synthesizer (-hp- Model 3320B, 50 ohms)
Digital Multimeter (-hp- 34740/34702)
50 Ohm Termination (-hp- 11048C)

**5-77. Linear and Log Gain Adjustments.**

a. Position the following front panel controls: (Only those controls printed in **BOLD** require a change from the previous adjustments).

ADAPTIVE SWEEP.....OFF
DISPLAY.....All pushbuttons released
**AMPLITUDE MODE....LOG 10 dB/DIV**
AMPLITUDE REF LEVEL....NORMAL
dBV/LIN-dBm 600 Ω.....dBV/LIN
**INPUT SENSITIVITY.....-20 dB**
VERNIER (Amplitude).....CAL (Fully CW)
FREQUENCY.....10000 Hz
START-CTR.....CTR
RESOLUTION BANDWIDTH.....300 Hz
DISPLAY SMOOTHING.....MIN
**FREQ. SPAN/DIV.....0.5 kHz**
SWEEP TIME/DIV.....0.1 SEC
**SWEEP MODE.....MANUAL**

Option 002: Set dBm 900 Ω/LIN-dBm 600 Ω switch to dBm 900 Ω; set INPUT MODE switch to UNBAL.

b. Adjust the front panel CAL 10 kHz pot fully CCW.

c. Adjust the frequency synthesizer to -20 dBV 10.0 kHz output (Option 002, adjust to -20 dBm 900 Ω) and connect the synthesizer to the INPUT terminals of the 3580A.

**NOTE**

*Always terminate your source properly and consult Table 5-14 for the setting needed for a signal source calibrated in dBm 50 Ω. Figure 5-6 shows the proper hookup for use with a 50 ohm frequency synthesizer such as the 3320B.*

**Table 5-14. Conversion Table.**

| 3580A INPUT SIGNAL LEVEL | 3320B or OTHER 50 OHM SOURCE | ABSOLUTE VOLTAGE |
|---|---|---|
| +10 dBV | +23.01 dBm | 3.162 volts |
| +10 dBm 900 Ω | +22.55 dBm | 3 volts |
| 0 dBV | +13.01 dBm | 1 volts |
| 0 dBm 900 Ω | +12.55 dBm | .949 volts |
| -10 dBV | +3.01 dBm | .3162 volts |
| -10 dBm 900 Ω | +2.55 dBm | .3000 volts |
| -20 dBV | -6.99 dBm | .1 volts |
| -20 dBm 900 Ω | -7.45 dBm | .0949 volts |
| -30 dBV | -16.9 dBm | .03162 volts |
| -30 dBm 900 Ω | -17.45 dBm | .03 volts |
| -40 dBV | -26.99 dBm | .01 volts |
| -40 dBm 900 Ω | -27.45 dBm | .095 volts |
| -50 dBV | -36.99 dBm | 3162 mV |
| -50 dBm 900 Ω | -37.45 dBm | 3 mV |
| -60 dBV | -46.99 dBm | 1 mV |
| -60 dBm 900 Ω | -47.45 dBm | .95 mV |
| -70 dBV | -56.99 dBm | .3162 mV |
| -70 dBm 900 Ω | -57.45 dBm | .3 mV |
| -80 dBV | -66.99 dBm | .1 mV |
| -80 dBm 900Ω | -67.45 dBm | .095 mV |

d. Adjust MANUAL VERNIER for a maximum display indication.

e. Connect the multimeter (AC mode, 10 volt range) to A4TP1. Note the reading with the front panel 10 kHz CAL pot fully CCW.

f. Adjust front panel CAL 10 kHz pot for 1.26 times the reading obtained in Step e.

Examples:

| | |
|---|---|
| 100mV x 1.26 = 126mV | 117mV x 1.26 = 147mV |
| 101mV x 1.26 = 127mV | 118mV x 1.26 = 149mV |
| 102mV x 1.26 = 129mV | 119mV x 1.26 = 150mV |
| 103mV x 1.26 = 130mV | 120mV x 1.26 = 151mV |
| 104mV x 1.26 = 131mV | 121mV x 1.26 = 152mV |
| 105mV x 1.26 = 132mV | 122mV x 1.26 = 154mV |
| 106mV x 1.26 = 134mV | 123mV x 1.26 = 155mV |
| 107mV x 1.26 = 135mV | 124mV x 1.26 = 156mV |
| 108mV x 1.26 = 136mV | 125mV x 1.26 = 158mV |
| 109mV x 1.26 = 137mV | 126mV x 1.26 = 159mV |

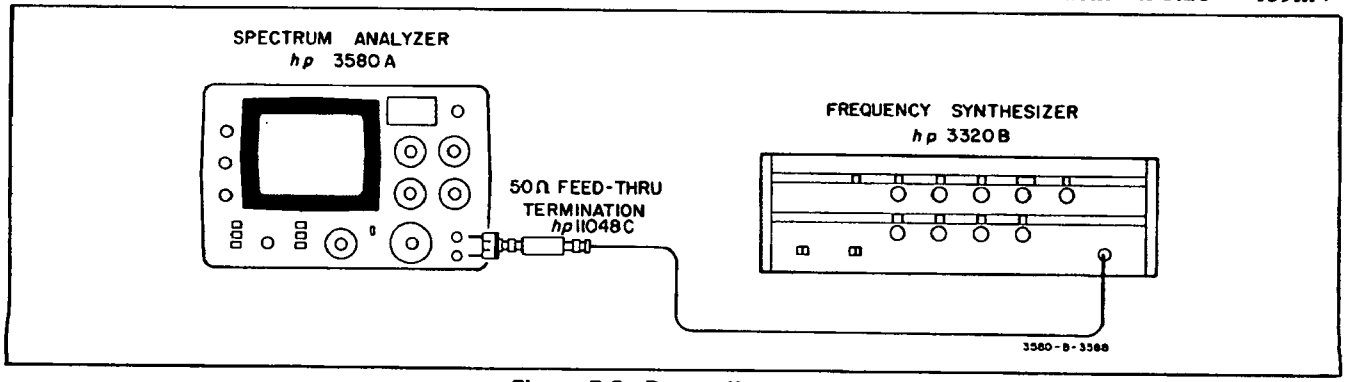


**Figure 5-6. Proper Hookup.**

Example Cont'd

| | |
|---|---|
| 110mV x 1.26 = 139mV | 127mV x 1.26 = 160mV |
| 111mV x 1.26 = 140mV | 128mV x 1.26 = 161mV |
| 112mV x 1.26 = 141mV | 129mV x 1.26 = 163mV |
| 113mV x 1.26 = 142mV | 130mV x 1.26 = 164mV |
| 114mV x 1.26 = 144mV | 131mV x 1.26 = 165mV |
| 115mV x 1.26 = 145mV | 132mV x 1.26 = 166mV |
| 116mV x 1.26 = 146mV | 133mV x 1.26 = 168mV |

g. Turn 3580A POWER SWITCH to OFF. Place A4 on extender boards. Turn the power switch back to ON and reposition the following front panel control:

AMPLITUDE MODE.....LINEAR

h. Push DISPLAY - CLEAR WRITE momentarily. Adjust A4L1 (I.F. AMP GAIN ADJ.) for a maximum screen display. Remove the source from the 3580A INPUT.

i. Set the controls of the multimeter for DC mode, 1 volt range. Connect the multimeter to the rear panel Y-AXIS output and adjust A4R11 (DC OFFSET ADJ.) for 0 volt Y-AXIS output level (± 10 mV).

j. Turn POWER switch to OFF, replace A4 into card nest of 3580A, and turn power switch back to ON (AC). Reconnect the frequency synthesizer (with proper termination) to the 3580A INPUT. Push CLEAR WRITE momentarily. Adjust the source to the same level as in Step c (−20 dBV for standard instrument or −20 dBm 900 Ω if Option 002).

k. Center the following pots:

A4R7, A4R8, A4R9, A4R10, A13R3 and A13R4

l. Reposition the following front panel controls:

INPUT SENSITIVITY.....CAL
SWEEP MODE.....REP

**NOTE**

*If the peak of the waveform is beyond display limits, slightly readjust A13R3 or A13R4 to bring to into view.*

m. Alternately switch between the LOG 1 dB/DIV and LOG 10 dB/DIV AMPLITUDE MODEs and adjust A4R8 (DETECTOR GAIN ADJ.) until the peak amplitude of both waveforms is equal.

n. Alternately switch between the LOG 10 dB/DIV and LINEAR AMPLITUDE MODEs and adjust A4R6 (LINEAR GAIN ADJ.) until the peak amplitude of both waveforms is equal.

o. Repeat Steps m and n until the peak amplitude of all three waveforms is equal.

p. Reposition the following front panel control:

AMPLITUDE MODE....LOG 10 dB/DIV

Press and hold the DISPLAY-CLEAR WRITE button to obtain a base line trace. Press the DISPLAY-STORE button to store the base line trace. Release the CLEAR WRITE button.

q. Adjust A13R3 (VERTICAL GAIN ADJ.) and A13R4 (VERTICAL ZERO ADJ.) for a full scale and base line screen display (waveform peak at 0 dB and base line at −100 dB). Press and release the DISPLAY-STORE button.

**NOTE**

*There may be some non-symmetry in the bottom corners of the CRT display. Use the center portion of the base line trace for the above calibration.*

r. Reposition the following front panel controls:

INPUT SENSITIVITY.....−20 dB

s. Adjust the frequency synthesizer output level to −80 dBV for standard instruments or −80 dBm 900 Ω for instruments equipped with Option 002. See Table 5-14 for proper level setting of source.

t. Adjust A4R7 (LOG GAIN ADJ.) so display peak is at the proper level. (−60 dB graticule ± 1 dB on CRT display, since full scale equals −20 dB).

**NOTE**

*This is a very low level signal. Always slide the cover shield over the A5 assembly after making an adjustment; then verify the results.*

u. Increase the signal level back to full scale (−20 dBV for standard instruments or −20 dBm 900 Ω for Option 002) and adjust A4R8 (DETECTOR GAIN ADJ.) for a full scale (0 dB) indication on the display.

v. Repeat Steps r, s, t, and u until the 0 dB and −60 dB points on the display are calibrated properly.

w. Alternate the input signal level between −80 dBV and −60 dBV (−80 dBm to −60 dBm 900 Ω for Option 002). See Table 5-14 for proper level. The indication should fall on the −60 dB and −40 dB (± 1 dB) graticule lines of the display. If not, adjust A4R10 (BOTTOM END LINEARITY ADJ.) to bring these two points as close into tolerance as possible.

x. Alternate the input signal level between −20 dBV and −40 dBV (−20 dBm to −40 dBm, 900 Ω for Option 002). See Table 5-14 for proper level setting. These levels should give 0 dB and −20 dB (± 1 dB) indications on the display. If not, adjust A4R9 (TOP END

LINEARITY ADJ.) to bring these two points as close into calibration as possible.

y. Adjust the input signal level to −20 dBV (−20 dBm, 900 Ω for Option 002). Switch the AMPLITUDE MODE pushbuttons between LOG 10 dB/DIV and LOG 1 dB/DIV. Adjust A4R8 (DETECTOR GAIN ADJ.) or A4R7 (LOG GAIN ADJU.) to make the levels for the two AMPLITUDE MODE settings equal.

z. Reposition the following front panel controls:

AMPLITUDE MODE....LOG 10 dB/DIV

aa. Step the input signal level in 10 dB steps from a full scale 0 dB indication (−20 dBV or −20 dBm 900 Ω input signal) to a −60 dB indication (−80 dBV or −80 dBm 900 Ω input signal). The display should fall within ± 2 dB of the proper graticule marking to meet specifications.

**NOTE**

*Remember to position the inner circuit board shield over A2-A5 when making low level measurements.*

bb. Repeat Steps r thru aa to bring the log amplifier into the desired test limits.

cc. Adjust the input signal level to −20 dBV (Instruments with Option 002 should also have this same input level.)

dd. Reposition the following front panel control:

AMPLITUDE MODE.....LINEAR

ee. Adjust A4R6 (LINEAR GAIN ADJ.) for a full scale screen display.

### 5-78. Bandwidth Gain Switching Adjustments.

a. Position the following front panel controls: (Only those controls printed in **BOLD** require a change from the previous adjustments.

ADAPTIVE SWEEP.....OFF
DISPLAY.....All pushbuttons released
AMPLITUDE MODE.....LINEAR
AMPLITUDE REF LEVEL....NORMAL
dBV/LIN-dBm 600 Ω.....dBV/LIN
INPUT SENSITIVITY.....−20 dB
VERNIER (Amplitude).....CAL (Fully CW)
START-CTR.....CTR
DISPLAY SMOOTHING.....MIN
RESOLUTION BANDWIDTH.....300 Hz
**FREQ. SPAN/DIV.....50 Hz**
SWEEP TIME/DIV.....0.1 SEC
FREQUENCY.....10000 Hz
**SWEEP MODE.....MANUAL**

Option 002: Set dBm 900 Ω/Lin - dBm 600 Ω switch to dBm 900 Ω; set INPUT MODE switch to UNBAL.

b. Replace the inner cover shield over A2-A5 and screw down tightly.

c. Adjust the frequency synthesizer to a 10 kHz, −20 dBV output (same level for Option 002). See Table 5-14 for proper level setting on the frequency synthesizer.

d. Adjust MANUAL VERNIER and the fine FREQUENCY control for a peak reading in the center of the display. Make the following full scale adjustments on the appropriate bandwidth setting.

**NOTE**

*The fine FREQUENCY control may have to be readjusted after each Bandwidth/Freq. Span setting for a peak reading in the center of the screen.*

| RESOLUTION BANDWIDTH | FREQ. SPAN/DIV | GAIN POT ADJ. | SETTING |
|---|---|---|---|
| 100 Hz | 50 Hz | A4R5 | Full scale 0 dB display indication. |
| 30 Hz | 10 Hz | A4R4 | |
| 10 Hz | 5 Hz | A4R3 | |
| 3 Hz | 5 Hz | A4R2 | |
| 1 Hz | 5 Hz | A4R1 | |

### 5-79. Frequency Response Adjustments.

a. Position the following front panel controls: (Only those controls printed in **BOLD** require a change from the previous adjustments.

SWEEPMODE.....RESET
ADAPTIVE SWEEP.....OFF
DISPLAY.....All pushbuttons released
**AMPLITUDE MODE.....1 dB/DIV**
AMPLITUDE REF LEVEL....NORMAL
dBV/LIN-dBm 600 Ω.....dBV/LIN
INPUT SENSITIVITY.....−20 dB
VERNIER (Amplitude).....CAL (Fully CW)
START-CTR.....CTR
**RESOLUTION BANDWIDTH.....300 Hz**
DISPLAY SMOOTHING.....MIN
**FREQ. SPAN/DIV.....0.2 kHz**
SWEEP TIME/DIV.....0.1 SEC
**FREQUENCY.....01000 Hz**
**SWEEP MODE.....REP**

Option 002: Set dBm 900 Ω/LIN-dBm 600 Ω switch to dBm 900 Ω; set INPUT MODE switch to UNBAL.

b. Adjust the frequency synthesizer for 1 kHz output at −20 dBV (−20 dBm 900 Ω for Option 002), and connect it to the 3580A INPUT (properly terminated). Ad-

just the front panel CAL 10 kHz for a full scale (0 dB) display.

c. Reposition the following front panel controls:

FREQUENCY.....40000 Hz
INPUT SENSITIVITY.....−10 dB

d. Adjust the signal source for a 40 kHz - 10 dBV signal (−10 dBm 900 Ω for Option 002).

e. Adjust A9C2 (40 kHz - 10 dB AMP ADJ.) for a full scale (0 dB) display (± 1 minor division). In a similar manner, perform the following adjustments:

| SIGNAL SOURCE OUTPUT LEVEL | INPUT SENSITIVITY | ADJUST | DISPLAY READING |
|---|---|---|---|
| 0 dBV (or −0 dBm 900 Ω) | 0 | A9C3 | 0dB ± .2dB |
| +10 dBV (or 0 dBm 900 Ω) | +10 | A9C4 | 0dB ± .2dB |

f. Adjust the ac signal source to 1 kHz at +10 dBV (+ 10 dBm 900 Ω for Option 002). Reposition the following front panel controls:

| | |
|---|---|
| AMPLITUDE REF LEVEL | −10 dB |
| INPUT SENSITIVITY | +20 dB (According to MAX INPUT indicator, not white underlay on INPUT SENSITIVITY dial). |
| FREQUENCY | 01000 Hz |

g. Store the screen display level by pushing:

DISPLAY.....STORE

h. Adjust the signal source for a 40 kHz output (same level as in Step f). Reposition the following front panel controls:

FREQUENCY.....40000 Hz

i. Adjust A9C5 (40 kHz + 20 dB AMP ADJ.) for the same level stored in Step g.

j. Reposition the following front panel controls:

AMPLITUDE REF LEVEL.....−20 dB
INPUT SENSITIVITY.....+30 dB (According to MAX INPUT indicator)
FREQUENCY.....01000 Hz

k. Adjust the signal source to a 1 kHz + 10 dBV (+10 dBm for Option 002) output. (Note the screen display level by releasing and then depressing:

DISPLAY.....STORE).

l. Adjust the signal source for a 40 kHz output (same level as in Step k). Reposition the following front panel control:

FREQUENCY.....40000 Hz

m. Adjust A9C6 (40 kHz + 30 dB AMP ADJ.) for the same level stored in Step k).

**5-80. Internal Calibrator Adjustment.**

a. Position the following front panel controls: (Only those controls printed in **BOLD** require a change from the previous adjustments).

ADAPTIVE SWEEP.....OFF
**DISPLAY.....All pushbuttons released**
AMPLITUDE MODE.....1 dB/DIV
**AMPLITUDE REF LEVEL....NORMAL**
dBV/LIN-dBm 600 Ω.....dBV/LIN
**INPUT SENSITIVITY.....−20 dB**
VERNIER (Amplitude).....CAL (Fully CW)
**FREQUENCY.....10000 Hz**
START-CTR.....CTR
RESOLUTION BANDWIDTH.....300 Hz
DISPLAY SMOOTHING.....MIN
FREQ. SPAN/DIV.....0.2 kHz
SWEEP TIME/DIV.....0.1 SEC
SWEEP MODE.....REP

Option 002: Set dBm 900 Ω/LIN-dBm 600 Ω switch to dBm 900 Ω; set INPUT MODE switch to UNBAL.

b. Connect a properly terminated frequency synthesizer to the 3580A INPUT and adjust the synthesizer for a 10 kHz −20 dBV output level (−20 dBm 900 Ω for instruments with Option 002). See Table 5-14 for proper settings.

c. Adjust front panel CAL 10 kHz for a full scale (0 dB) peak on the display.

d. Reposition the following front panel control:

INPUT SENSITIVITY.....CAL

e. Remove the input signal source. Adjust A2R5 (CAL LEVEL ADJ.) for a full scale (0 dB) screen display.

**5-81. Mixer Balance Adjustments.**

5-82. These adjustments balance the input mixer and tracking oscillator mixer. These adjustments should be done if the zero beat response of the instrument under calibration is too large (> −30 dB) or if the TRACKING OSC OUTput is distorted (> −40 dB distortion).

**5-83. Recommended Test Equipment:**

Oscilloscope (-hp- Model 180A with 1801A and 1820A plug-ins)

a. Disconnect all signal sources from the 3580A.

b. Position the following front panel controls: (Only those controls printed in **BOLD** require a change from the previous adjustments).

ADAPTIVE SWEEP.....OFF
DISPLAY.....All pushbuttons released
**AMPLITUDE MODE....LOG 10 dB/DIV**
AMPLITUDE REF LEVEL....NORMAL
dBV/LIN-dBm 600 Ω.....dBV/LIN
**INPUT SENSITIVITY.....-20 dB**
VERNIER (Amplitude).....CAL
(Fully CW)
**FREQUENCY.....00000 Hz**
**START-CTR ..... START**
RESOLUTION BANDWIDTH.....300 Hz
DISPLAY SMOOTHING.....MIN
FREQ. SPAN/DIV.....0.2 kHz
SWEEP TIME/DIV.....0.1 SEC
SWEEP MODE.....REP

Option 002: Set dBm 900 Ω/LIN-dBm 600 Ω switch to dBm 900 Ω; set INPUT MODE switch to UNBAL.

c. Adjust A9R1 (MIXER BALANCE) for a minimum screen display (less than -30 dB to meet specifications).

d. Reposition the following front panel controls:

FREQUENCY.....0.5000 Hz
SWEEP MODE.....MANUAL

e. Adjust the rear panel TRACKING OSC LEVEL fully CW, and set the EXT REF-NORMAL switch to NORMAL.

f. Connect the oscilloscope to the rear panel TRACKING OSC OUT connector and monitor the output.

g. Adjust A2R113 (T.O. MIXER BALANCE) for the cleanest signal. See Figure 5-7.

**5-84. Adaptive Sweep Marker Adjustment. Δ16**

5-85. This adjustment properly positions the ADAPTIVE SWEEP marker. If the marker (blank spot on screen) does not appear at the same point on the display as new information being written onto the display, do this adjustment:

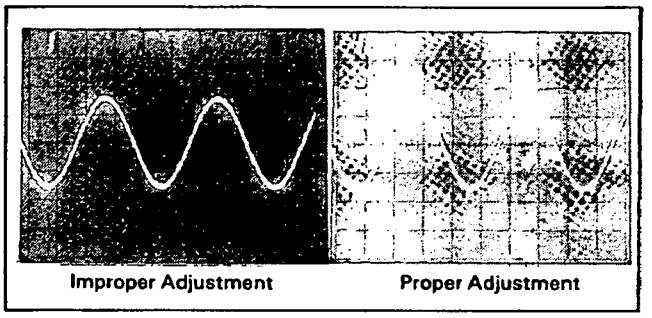


**Figure 5-7. Oscillator Output Adjustment.**

a. Position the following front panel controls: (Only those controls printed in **BOLD** require a change from the previous adjustments).

**SWEEP MODE.....RESET**
ADAPTIVE SWEEP.....OFF
(Fully CCW)
DISPLAY.....All pushbuttons released
AMPLITUDE MODE..LOG 10 dBV/DIV
AMPLITUDE REF LEVEL....NORMAL
dBV/LIN-dBm 600 Ω.....dBV/LIN
**INPUT SENSITIVITY.....CAL**
VERNIER (Amplitude).....CAL
(Fully CW)
START-CTR ..... START
RESOLUTION BANDWIDTH.....300 Hz
DISPLAY SMOOTHING.....MIN
**FREQ. SPAN/DIV.....2 kHz**
SWEEP TIME/DIV.....1 SEC
**FREQUENCY.....00000 Hz**
**SWEEP MODE.....MAN**

Option 002: Set dBm 900 ΩLIN-dBm 600 Ω switch to dBm 900 Ω; set INPUT MODE switch to UNBAL.

c. Momentarily press the DISPLAY-CLEAR WRITE button. A dot should remain at the top of the scope.

b. Adjust the MANUAL VERNIER control until the trace is at the peak of the 10 kHz signal. The FREQUENCY display should be about 10 kHz.

d. Turn the ADAPTIVE SWEEP on and adjust A8R3 (SWEEP MARKER ADJ.) until the sweep marker (blank spot in trace) blanks out the dot at the top of the scope.

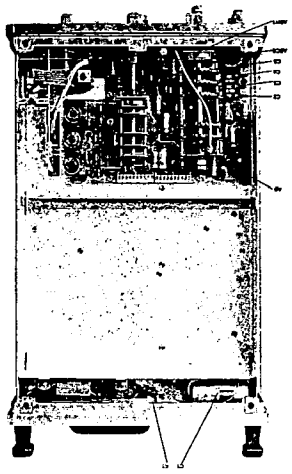

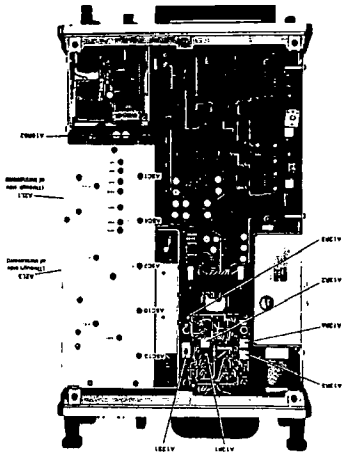

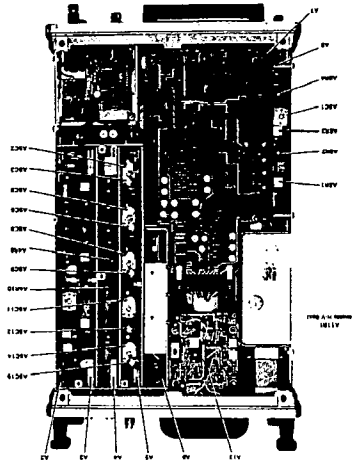

# PERFORMANCE TEST CARD

Hewlett-Packard Model 3580A
Spectrum Analyzer
Serial No. _____

Tests Performed By _____
Date _____

## RANGE AND FREQUENCY ACCURACY TESTS

| Ideal Frequency Display Reading | Actual | Test Limits |
|---|---|---|
| 30000 Hz | _____ Hz | ± 3 Hz |
| 30000 Hz | _____ Hz | ± 3 Hz |

## DISPLAY ACCURACY TESTS

The separation between the Zero Response and 50 kHz harmonic should be 10 div. ± .2 div. The separation between any two adjacent responses should be 2 div. ± .04 div.

Pass _____ Fail _____

## FREQUENCY SPAN TESTS

| Frequency Span/Div. | Frequency Display Reading (Manual Vernier Fully CW) | Test Limits |
|---|---|---|
| 5 Hz | _____ Hz | 00050 Hz ± 1 Hz |
| 10 Hz | _____ Hz | 00100 Hz ± 2 Hz |
| 20 Hz | _____ Hz | 00200 Hz ± 4 Hz |
| 50 Hz | _____ Hz | 00500 Hz ± 10 Hz |
| .1 kHz | _____ Hz | 01000 Hz ± 20 Hz |
| .2 kHz | _____ Hz | 02000 Hz ± 40 Hz |
| .5 kHz | _____ Hz | 05000 Hz ± 100 Hz |
| 1 kHz | _____ Hz | 10000 Hz ± 200 Hz |
| 2 kHz | _____ Hz | 20000 Hz ± 400 Hz |

## LOG SWEEP TEST

The 20 kHz harmonic of the internal CAL signal must fall on the 20 kHz LOG SWEEP graticule (± 1 minor division).

Pass _____ Fail _____

## SWEEP TIME TEST

All sweep rates must work properly.

Pass _____ Fail _____

## BANDWIDTH SWITCHING ACCURACY TEST

| Bandwidth | Display Indication (0 dB full scale) (1 dB/div) | Test Limits |
|---|---|---|
| 100 Hz | _____ dB | -1.0 dB ± .5 dB |
| 30 Hz | _____ dB | -1.0 dB ± .5 dB |
| 10 Hz | _____ dB | -1.0 dB ± .5 dB |
| 3 Hz | _____ dB | -1.0 dB ± .5 dB |
| 1 Hz | _____ dB | -1.0 dB ± 1 dB |

## PERFORMANCE TEST CARD (cont'd)

### LOG AMPLITUDE DISPLAY ACCURACY TESTS

| Input Level Standard | Input Level Option 002 900 Ω | Display Indication (0 dB full scale) (10 dB/div) | Test Limits |
|---|---|---|---|
| - 10 dBV | - 10 dBm 900 Ω | _____ dB | - 10 dB ± 2 dB |
| - 20 dBV | - 20 dBm | _____ dB | - 20 dB ± 2 dB |
| - 30 dBV | - 30 dBm | _____ dB | - 30 dB ± 2 dB |
| - 40 dBV | - 40 dBm | _____ dB | - 40 dB ± 2 dB |
| - 50 dBV | - 50 dBm | _____ dB | - 50 dB ± 2 dB |
| - 60 dBV | - 60 dBm | _____ dB | - 60 dB ± 2 dB |
| - 70 dBV | - 70 dBm | _____ dB | - 70 dB ± 2 dB |
| - 80 dBV | - 80 dBm | _____ dB | - 80 dB ± 2 dB |

### LINEAR AMPLITUDE DISPLAY ACCURACY TESTS

| Input Level | Display Indication (1 V full scale) (10 dB/div) | Test Limits |
|---|---|---|
| .9 V | _____ V | .90 V ± .02 V |
| .8 V | _____ V | .80 V ± .02 V |
| .7 V | _____ V | .70 V ± .02 V |
| .6 V | _____ V | .60 V ± .02 V |
| .5 V | _____ V | .50 V ± .02 V |
| .4 V | _____ V | .40 V ± .02 V |
| .3 V | _____ V | .30 V ± .02 V |
| .2 V | _____ V | .20 V ± .02 V |
| .1 V | _____ V | .10 V ± .02 V |

### AMPLITUDE REFERENCE TESTS (Linear Mode)

| 3580A Input (10 kHz) | Amp Rev Level | Display Indication (% of full scale) | Test Limits |
|---|---|---|---|
| 200 mV | - 10 | _____ % | 90% ± 3% (± .3 major divisions) |
| 100 mV | - 20 | _____ % | 90% ± 3% (± .3 major divisions) |
| 20 mV | - 30 | _____ % | 90% ± 3% (± .3 major divisions) |
| 10 mV | - 40 | _____ % | 90% ± 3% (± .3 major divisions) |
| 2 mV | - 50 | _____ % | 90% ± 3% (± .3 major divisions) |
| 1 mV | - 60 | _____ % | 90% ± 3% (± .3 major divisions) |
| .2 mV | - 70 | _____ % | 90% ± 10% (± 1 major division) |

### AMPLITUDE REFERENCE LEVEL TEST (Log Mode)

| Amp Rev Level | Multimeter Reading | Test Limits |
|---|---|---|
| - 10 dB | _____ V | 2.00 V ± .02 V |
| - 20 dB | _____ V | 2.50 V ± .02 V |
| - 30 dB | _____ V | 3.00 V ± .03 V |
| - 40 dB | _____ V | 3.50 V ± .03 V |
| - 50 dB | _____ V | 4.00 V ± .04 V |
| - 60 dB | _____ V | 4.50 V ± .04 V |
| - 70 dB | _____ V | 5.00 V ± .05 V |

## INPUT ATTENUATOR TESTS

| Input | Amp Ref Level | Input Sensitivity (according to white marker) | Display Indication (% of full scale) | Test Limits (full scale ± .3 major div) |
|---|---|---|---|---|
| .2 V | - 30 dB | .2 V | _____ % | 100% ± 3% |
| .1 V | - 30 dB | .1 V | _____ % | 100% ± 3% |
| 20 mV | - 30 dB | 20 mV | _____ % | 100% ± 3% |
| .2 V | normal | .2 V | _____ % | 100% ± 3% |
| .1 V | normal | .1 V | _____ % | 100% ± 3% |
| 20 mV | normal | 20 mV | _____ % | 100% ± 3% |
| 10 mV | normal | 10 mV | _____ % | 100% ± 3% |
| 2 mV | normal | 2 mV | _____ % | 100% ± 3% |
| 1 mV | normal | 1 mV | _____ % | 100% ± 3% |
| .2 mV | normal | .2 mV | _____ % | 100% ± 3% |

## FREQUENCY RESPONSE TESTS

| Input Level Standard | Input Level Option 002 (900 Ω) | Input Sensitivity (according to white marker) | Frequency | Display Indication (0 dB = full scale 1 dB/div) | Test Limits |
|---|---|---|---|---|---|
| 0 dBV | 0 dBM | 0 dB | 10 Hz | _____ dB | 0 dB ± .5 dB |
| 0 dBV | 0 dBM | 0 dB | 20 Hz | _____ dB | 0 dB ± .3 dB |
| 0 dBV | 0 dBM | 0 dB | 1 kHz | _____ dB | 0 dB ± .3 dB |
| 0 dBV | 0 dBM | 0 dB | 20 kHz | _____ dB | 0 dB ± .3 dB |
| 0 dBV | 0 dBM | 0 dB | 50 kHz | _____ dB | 0 dB ± .5 dB |
| - 10 dBV | - 10 dBM | - 10 dB | 10 Hz | _____ dB | 0 dB ± .5 dB |
| - 10 dBV | - 10 dBM | - 10 dB | 20 Hz | _____ dB | 0 dB ± .3 dB |
| - 10 dBV | - 10 dBM | - 10 dB | 1 kHz | _____ dB | 0 dB ± .3 dB |
| - 10 dBV | - 10 dBM | - 10 dB | 20 kHz | _____ dB | 0 dB ± .3 dB |
| - 10 dBV | - 10 dBM | - 10 dB | 50 kHz | _____ dB | 0 dB ± .5 dB |
| - 20 dBV | - 20 dBM | - 20 dB | 10 Hz | _____ dB | 0 dB ± .5 dB |
| - 20 dBV | - 20 dBM | - 20 dB | 20 Hz | _____ dB | 0 dB ± .3 dB |
| - 20 dBV | - 20 dBM | - 20 dB | 1 kHz | _____ dB | 0 dB ± .3 dB |
| - 20 dBV | - 20 dBM | - 20 dB | 20 kHz | _____ dB | 0 dB ± .3 dB |
| - 20 dBV | - 20 dBM | - 20 dB | 50 kHz | _____ dB | 0 dB ± .5 dB |
| - 30 dBV | - 30 dBM | - 30 dB | 10 Hz | _____ dB | 0 dB ± .5 dB |
| - 30 dBV | - 30 dBM | - 30 dB | 20 Hz | _____ dB | 0 dB ± .3 dB |
| - 30 dBV | - 30 dBM | - 30 dB | 1 kHz | _____ dB | 0 dB ± .3 dB |
| - 30 dBV | - 30 dBM | - 30 dB | 20 kHz | _____ dB | 0 dB ± .3 dB |
| - 30 dBV | - 30 dBM | - 30 dB | 50 kHz | _____ dB | 0 dB ± .5 dB |
| - 40 dBV | - 40 dBM | - 40 dB | 10 Hz | _____ dB | 0 dB ± .5 dB |
| - 40 dBV | - 40 dBM | - 40 dB | 20 Hz | _____ dB | 0 dB ± .3 dB |
| - 40 dBV | - 40 dBM | - 40 dB | 1 kHz | _____ dB | 0 dB ± .3 dB |
| - 40 dBV | - 40 dBM | - 40 dB | 20 kHz | _____ dB | 0 dB ± .3 dB |
| - 40 dBV | - 40 dBM | - 40 dB | 50 kHz | _____ dB | 0 dB ± .5 dB |

## INTERNAL CALIBRATOR TEST

| | Display Indication (0 dB = full scale) | Test Limit |
|---|---|---|
| 10 kHz Cal. Signal Level | _____ dB | 0 dB ± .15 dB |

## PERFORMANCE TEST CARD (cont'd)

### BANDWIDTH TESTS

| Resolution Bandwidth | Lower 3 dB Frequency | Upper 3 dB Frequency | Test Limits |
|---|---|---|---|
| 300 Hz | 10 kHz | _____ kHz | 10.3 kHz ± 45 Hz |
| 100 Hz | 1 kHz | _____ kHz | 1.1 kHz ± 15 Hz |
| 30 Hz | 1 kHz | _____ kHz | 1.030 kHz ± 4.5 Hz |
| 10 Hz | 1 kHz | _____ kHz | 1.010 kHz ± 1.5 Hz |

| Resolution Bandwidth | Lower 60 dB Frequency | Upper 60 dB Frequency | Test Limits |
|---|---|---|---|
| 3 Hz | 1 kHz | _____ kHz | 1.030 kHz ± 4.5 Hz |
| 1 Hz | 1 kHz | _____ kHz | 1.010 kHz ± 1.5 Hz |

### NOISE LEVEL TESTS

| Bandwidth | Frequency | Noise (- 70 dB = full scale) | Test Limits |
|---|---|---|---|
| 300 Hz | 10 kHz | _____ dB | <- 130 dB |
| 30 Hz | 10 kHz | _____ dB | <- 140 dB |
| 30 Hz | 100 Hz | _____ dB | <- 132 dB |
| 30 Hz | 1 kHz | _____ dB | <- 140 dB |
| 1 Hz | 1 kHz | _____ dB | <- 150 dB |
| 1 Hz | 100 Hz | _____ dB | <- 143 dB |
| 1 Hz | 10 Hz | _____ dB | <- 135 dB |

### NOISE SIDEBAND TEST

Noise Sidebands must be at least 70 dB below continuous wave signal, ± 10 Hz away.

Pass _____ Fail _____

### SPURIOUS RESPONSE TEST

All non-line-related spurious responses must be at least 80 dB below a full scale reference.

Pass _____ Fail _____

### LINE-RELATED SPURIOUS RESPONSE TEST

All line-related spurious responses must be less than - 140 dBV (.1 $\mu$V).

Pass _____ Fail _____

### IF FEEDTHRU TEST

IF Feedthru must be at least - 70 dB below the full scale reference.

Pass _____ Fail _____

### ZERO BEAT RESPONSE TEST

The zero beat response must be at least 30 dB below the full scale reference.

Pass _____ Fail _____

### INPUT IMPEDANCE TESTS

| Frequency | Display Indication (0 dB = full scale) Without 1 MΩ | With 1 MΩ | Test Limit |
|---|---|---|---|
| 1 kHz | 0 dB | _____ dB | - 3 dB ± 1 dB |

## PERFORMANCE TEST CARD (cont'd)

INPUT IMPEDANCE TESTS (cont'd)

| Frequency | Display Indication (with 1 MΩ Resistor) | Test Limit |
|---|---|---|
| 1 kHz | 0 dB | |
| 10 kHz | _____ dB | - 3 dB ± 1 dB |

**TRACKING OSCILLATOR OUTPUT TESTS**

FREQUENCY RESPONSE:

| Instrument | Frequency | Multimeter Reading | Test Limits |
|---|---|---|---|
| Standard | 50 Hz | 2.00 volts rms | |
| | 50 kHz | _____ volts rms | 2.00 volts ± .06 volts |
| Option 002 | 300 Hz | 2.00 volts rms | |
| | 20 kHz | _____ volts rms | 2.00 volts ± .1 volt |

FREQUENCY ACCURACY:

| Resolution Bandwidth | Display Indication | Test Limit |
|---|---|---|
| 30 Hz | 2 V (full scale) | |
| 3 Hz | _____ V | 1 V – 2 V (half to full scale) |

DISTORTION:

Distortion: _____ dB  Test Limit: less than - 40 dB

**RECORDER OUTPUT TESTS**

| Recorder Output | Display Indication | Multimeter Reading | Test Limits |
|---|---|---|---|
| X-Axis | Manual Vernier fully CCW | _____ V | 0 V dc ± .15 V |
| | Manual Vernier fully CW | _____ V | 5 V dc ± .15 V |
| Y-Axis | Full Scale | _____ V | 5 V dc ± .15 V |
| | Bottom Graticule | _____ V | 0 V dc ± .15 V |

**COMMON MODE REJECTION TEST (Option 002 only)**

| Common Mode Input | Display Indication (full scale = 0 dBM 900 Ω) | Test Limit |
|---|---|---|
| 60 Hz - 0 dBM 900 Ω | _____ dBM 900 Ω | Less than - 60 dBm 900 Ω |

**FREQUENCY RESPONSE TEST (Option 002 only)**

| Frequency | Display Indication (- 1 dB = 0 dBM 900 Ω, 1 dB/div) | Test Limit (± .5 major div) |
|---|---|---|
| 300 Hz | _____ dBM 900 Ω | - 1 dB ± .5 dB |
| 1 kHz | _____ dBM 900 Ω | - 1 dB ± .5 dB |
| 20 kHz | _____ dBM 900 Ω | - 1 dB ± .5 dB |

# SECTION VI
# REPLACEABLE PARTS

## 6-1. INTRODUCTION.

6-2. This section contains information for ordering replacement parts. Table 6-3 lists parts in alphameric order of their reference designators and indicates the description, -hp- part number of each part, together with any applicable notes, and provides the following:

a. Total quantity used in the instrument (Qty column). The total quantity of a part is given the first time the part number appears.

b. Description of the part (see list of abbreviations in Table 6-1).

c. Typical manufacturer of the part in a five-digit code (see Table 6-2 for list of manufacturers).

d. Manufacturers part number.

6-3. Miscellaneous parts are listed at the end of Table 6-3.

## 6-4. ORDERING INFORMATION.

6-5. To obtain replacement parts, address order or inquiry to your local Hewlett-Packard Field Office. (See Appendix B for list of office locations.) Identify parts by their Hewlett-Packard part numbers. Include instrument model and serial numbers.

## 6-6. NON-LISTED PARTS.

6-7. To obtain a part that is not listed, include:

a. Instrument model number.

b. Instrument serial number.

c. Description of the part.

d. Function and location of the part.

## 6-8. PROPRIETARY PARTS.

6-9. Items marked by a dagger (†) in the reference designator column are available only for repair and service of Hewlett-Packard instruments.

**Table 6-1. List of Abbreviations.**

**ABBREVIATIONS**

| | | | |
|---|---|---|---|
| Ag . . . silver | Hz . . . hertz (cycle(s) per second) | NPO . . . negative positive zero (zero temperature coefficient) | sl . . . slide |
| Al . . . aluminum | ID . . . inside diameter | ns . . . nanosecond(s) = $10^{-9}$ seconds | SPDT . . . single-pole double-throw |
| A . . . ampere(s) | impg . . . impregnated | nsr . . . not separately replaceable | SPST . . . single-pole single-throw |
| Au . . . gold | incd . . . incandescent | | Ta . . . tantalum |
| C . . . capacitor | ins . . . insulation(ed) | Ω . . . ohm(s) | TC . . . temperature coefficient |
| cer . . . ceramic | kΩ . . . kilohm(s) = $10^{+3}$ ohms | obd . . . order by description | $TiO_2$ . . . titanium dioxide |
| coef . . . coefficient | kHz . . . kilohertz = $10^{+3}$ hertz | OD . . . outside diameter | tog . . . toggle |
| com . . . common | | | tol . . . tolerance |
| comp . . . composition | L . . . inductor | p . . . peak | trim . . . trimmer |
| conn . . . connection | lin . . . linear taper | pA . . . picoampere(s) | TSTR . . . transistor |
| dep . . . deposited | log . . . logarithmic taper | pc . . . printed circuit | V . . . volt(s) |
| DPDT . . . double-pole double-throw | mA . . . milliampere(s) = $10^{-3}$ amperes | pF . . . picofarad(s) $10^{-12}$ farads | vacw . . . alternating current working voltage |
| DPST . . . double-pole single-throw | MHZ . . . megahertz = $10^{+6}$ hertz | piv . . . peak inverse voltage | var . . . variable |
| elect . . . electrolytic | MΩ . . . megohm(s) = $10^{+6}$ ohms | p/o . . . part of | vdcw . . . direct current working voltage |
| encap . . . encapsulated | met flm . . . metal film | pos . . . position(s) | W . . . watt(s) |
| F . . . farad(s) | mfr . . . manufacturer | poly . . . polystyrene | w/ . . . with |
| FET . . . field effect transistor | ms . . . millisecond | pot . . . potentiometer | wiv . . . working inverse voltage |
| fxd . . . fixed | mtg . . . mounting | p-p . . . peak-to-peak | w/o . . . without |
| GaAs . . . gallium arsenide | mV . . . millivolt(s) = $10^{-3}$ volts | ppm . . . parts per million | ww . . . wirewound |
| GHz . . . gigahertz = $10^{+9}$ hertz | μF . . . microfarad(s) | prec . . . precision (temperature coefficient, long term stability and/or tolerance) | |
| gd . . . guard(ed) | μs . . . microsecond(s) | R . . . resistor | |
| Ge . . . germanium | μV . . . microvolt(s) = $10^{-6}$ volts | Rh . . . rhodium | * . . . optimum value selected at factory, average value shown (part may be omitted) |
| gnd . . . ground(ed) | my . . . Mylar ® | rms . . . root-mean-square | ** . . . no standard type number assigned selected or special type |
| H . . . henry(ies) | nA . . . nanoampere(s) = $10^{-9}$ amperes | rot . . . rotary | |
| Hg . . . mercury | NC . . . normally closed | Se . . . selenium | ® Dupont de Nemours |
| | Ne . . . neon | sect . . . section(s) | |
| | NO . . . normally open | Si . . . silicon | |

**DESIGNATORS**

| | | | |
|---|---|---|---|
| A . . . assembly | FL . . . filter | Q . . . transistor | TS . . . terminal strip |
| B . . . motor | HR . . . heater | QCR . . . transistor-diode | U . . . microcircuit |
| BT . . . battery | IC . . . integrated circuit | R(p) . . . resistor(pack) | V . . . vacuum tube, neon bulb, photocell, etc. |
| C . . . capacitor | J . . . jack | RT . . . thermistor | W . . . cable |
| CR . . . diode or thyristor | K . . . relay | S . . . switch | X . . . socket |
| DL . . . delay line | L . . . inductor | T . . . transformer | XDS . . . lampholder |
| DS . . . lamp | M . . . meter | TB . . . terminal board | XF . . . fuseholder |
| E . . . misc electronic part | MP . . . mechanical part | TC . . . thermocouple | Y . . . crystal |
| F . . . fuse | P . . . plug | TP . . . test point | Z . . . network |

**Table 6-2. Code List of Manufacturers.**

| Mfr. No. | Manufacturer Name | Address |
|---|---|---|
| 01121 | Allen-Bradley Co. | Milwaukee, WI 53204 |
| 01295 | Texas Instr. Inc. Semicond Cmpnt Div. | Dallas, TX 75222 |
| 0192B | RCA Corp. Solid State Div. | Somerville, NJ 08876 |
| 02111 | Spectrol Electronics Corp. | City of Ind, CA 91745 |
| 03888 | KDI Pyrofilm Corp. | Whippany, NJ 07981 |
| 04713 | Motorola Semiconductor Products | Phoenix, AZ 85062 |
| 07263 | Fairchild Semiconductor Div. | Mountain View, CA 94042 |
| 13606 | Sprague Elect. Co. Semiconductor Div. | Concord, NH 03301 |
| 19701 | Mepco/Electra Corp. | Mineral Wells, TX 76067 |
| 20940 | Micro-Ohm Corp. | El Monte, CA 91731 |
| 24046 | Transitron Electronic Corp. | Wakefield, MA 01880 |
| 24546 | Corning Glass Works (Bradford) | Bradford, PA 16701 |
| 27014 | National Semiconductor Corp. | Santa Clara, CA 95051 |
| 28480 | Hewlett-Packard Co. Corporate HQ | Palo Alto, CA 94304 |
| 32997 | Bourns Inc. Trimpot Prod. Div. | Riverside, CA 92507 |
| 34371 | Harris Semicon Div. Harris-Intertype | Melbourne, FL 32901 |
| 50088 | Mostek Corp. | Carrollton, TX 75006 |
| 52763 | Stettner-Trush Inc. | Cazenovia, NY 13035 |
| 56289 | Sprague Electric Co. | North Adams, MA 01247 |
| 72136 | Electro Motive Corp. Sub. IEC | Willimantic, CT 06226 |
| 72982 | Erie Technological Products Inc. | Erie, PA 16512 |
| 75042 | TRW Inc. Philadelphia Div. | Philadelphia, PA 19108 |
| 75915 | Littelfuse Inc. | Des Plaines, IL 60016 |
| 91637 | Dale Electronics Inc. | Columbus, NE 68601 |
| 99515 | Marshall Ind. Capacitor Div. | Monrovia, CA 91016 |

Replaceable Parts

## Table 6-3. Replaceable Parts.

| Reference Designation | HP Part Number | C D | Qty | Description | Mfr Code | Mfr Part Number |
|---|---|---|---|---|---|---|
| A1 | 03580-66501 | 7 | 1 | BOARD ASSEMBLY-MOTHER | 28480 | 03580-66501 |
| A1CR1 | 1901-0040 | 1 | 95 | DIODE-SWITCHING 30V 50MA 2NS DO-35 | 28480 | 1901-0040 |
| A1R1 | 0757-0280 | 3 | 22 | RESISTOR 1K 1% .125W F TC=0+-100 | 24546 | C4-1/8-T0-1001-F |
| A1R2 | 0757-0280 | 3 | | RESISTOR 1K 1% .125W F TC=0+-100 | 24546 | C4-1/8-T0-1001-F |
| A1R3 | 0698-3228 | 9 | 10 | RESISTOR 49.9K 1% .125W F TC=0+-100 | 28480 | 0698-3228 |
| A1R24 | 0698-4489 | 6 | 2 | RESISTOR 28K 1% .125W F TC=0+-100 | 24546 | C4-1/8-T0-2802-F |
| A2 | 03580-66502 | 8 | 1 | BOARD ASSEMBLY-OSCILLATOR<br>NOTE<br>REPLACEMENT CIRCUIT BOARDS DO NOT CONTAIN A2Y1 AND A2R65. SEE PARAGRAPH 7-25. | 28480 | 03580-66502 |
| A2C1 | 0140-0199 | 6 | 4 | CAPACITOR-FXD 240PF +-5% 300VDC MICA | 72136 | DM15F241J0300WV1CR |
| A2C2 | 0160-0162 | 5 | 2 | CAPACITOR-FXD .022UF +-10% 200VDC POLYE | 28480 | 0160-0162 |
| A2C3 | 0180-1714 | 7 | 1 | CAPACITOR-FXD 330UF+-10% 6VDC TA | 56289 | 150D337X9006B2 |
| A2C4 | 0121-0426 | 2 | 7 | CAPACITOR-V TRMR-MICA 50-380PF 175V | 72136 | T52517-7 |
| A2C5 | 0150-0084 | 9 | 15 | CAPACITOR-FXD .1UF +80-20% 100VDC CER | 28480 | 0150-0084 |
| A2C6 | 0150-0084 | 9 | | CAPACITOR-FXD .1UF +80-20% 100VDC CER | 28480 | 0150-0084 |
| A2C7 | 0140-0149 | 6 | 1 | CAPACITOR-FXD 470PF +-5% 300VDC MICA | 72136 | DM15F471J0300WV1CR |
| A2C8 | 0160-0154 | 5 | 3 | CAPACITOR-FXD 2200PF +-10% 200VDC POLYE | 28480 | 0160-0154 |
| A2C9* | 0150-0029 | 2 | 1 | CAPACITOR-FXD 1PF +-10% 500VDC TI DIOX | 28480 | 0150-0029 |
| A2C11 | 0160-2150 | 5 | 3 | CAPACITOR-FXD 33PF +-5% 300VDC MICA | 28480 | 0160-2150 |
| A2C12 | 0150-0050 | 9 | 8 | CAPACITOR-FXD 1000PF +80-20% 1KVDC CER | 28480 | 0150-0050 |
| A2C13 | 0150-0093 | 0 | 38 | CAPACITOR-FXD .01UF +80-20% 100VDC CER | 28480 | 0150-0093 |
| A2C14 | 0140-0196 | 3 | 2 | CAPACITOR-FXD 150PF +-5% 300VDC MICA | 72136 | DM15F151J0300WV1CR |
| A2C15 | 0140-0199 | 6 | | CAPACITOR-FXD 240PF +-5% 300VDC MICA | 72136 | DM15F241J0300WV1CR |
| A2C17 | 0160-2605 | 5 | 19 | CAPACITOR-FXD .02UF +80-20% 25VDC CER | 28480 | 0160-2605 |
| A2C18 | 0140-0176 | 9 | 3 | CAPACITOR-FXD 100PF +-2% 300VDC MICA | 72136 | DM15F101G0300WV1CR |
| A2C19 | 0180-0106 | 9 | 6 | CAPACITOR-FXD 60UF+-20% 6VDC TA | 56289 | 150D606X9006B2 |
| A2C20 | 0160-0162 | 5 | | CAPACITOR-FXD .022UF +-10% 200VDC POLYE | 28480 | 0160-0162 |
| A2C21 | 0160-0160 | 3 | 1 | CAPACITOR-FXD 8200PF +-10% 200VDC POLYE | 28480 | 0160-0160 |
| A2C22 | 0180-0228 | 6 | 11 | CAPACITOR-FXD 22UF+-10% 15VDC TA | 56289 | 150D226X9015B2 |
| A2C23 | 0140-0196 | 3 | | CAPACITOR-FXD 150PF +-5% 300VDC MICA | 72136 | DM15F151J0300WV1CR |
| A2C24 | 0160-2605 | 5 | | CAPACITOR-FXD .02UF +80-20% 25VDC CER | 28480 | 0160-2605 |
| A2C25 | 0150-0084 | 9 | | CAPACITOR-FXD .1UF +80-20% 100VDC CER | 28480 | 0150-0084 |
| A2C26 | 0150-0084 | 9 | | CAPACITOR-FXD .1UF +80-20% 100VDC CER | 28480 | 0150-0084 |
| A2C27 | 0160-2939 | 8 | 1 | CAPACITOR-FXD 420PF +-2% 500VDC MICA | 28480 | 0160-2939 |
| A2C28 | 0150-0116 | 8 | 1 | CAPACITOR-FXD 47PF +-10% 500VDC CER | 28480 | 0150-0116 |
| A2C29 | 0180-1701 | 2 | 2 | CAPACITOR-FXD 6.8UF+-20% 6VDC TA | 56289 | 150D685X0006A2 |
| A2C31 | 0160-2605 | 5 | | CAPACITOR-FXD .02UF +80-20% 25VDC CER | 28480 | 0160-2605 |
| A2C32 | 0150-0084 | 9 | | CAPACITOR-FXD .1UF +80-20% 100VDC CER | 28480 | 0150-0084 |
| A2C33 | 0140-0200 | 0 | 6 | CAPACITOR-FXD 390PF +-5% 300VDC MICA | 72136 | DM15F391J0300WV1CR |
| A2C34 | 0150-0093 | 0 | | CAPACITOR-FXD .01UF +80-20% 100VDC CER | 28480 | 0150-0093 |
| A2C35 | 0160-0940 | 7 | 1 | CAPACITOR-FXD 2400PF +-5% 500VDC MICA | 28480 | 0160-0940 |
| A2C36 | 0150-0093 | 0 | | CAPACITOR-FXD .01UF +80-20% 100VDC CER | 28480 | 0150-0093 |
| A2C37 | 0180-0210 | 6 | 9 | CAPACITOR-FXD 3.3UF+-20% 15VDC TA | 56289 | 150D335X0015A2 |
| A2C38 | 0150-0093 | 0 | | CAPACITOR-FXD .01UF +80-20% 100VDC CER | 28480 | 0150-0093 |
| A2C39 | 0180-0061 | 5 | 9 | CAPACITOR-FXD 100UF+75-10% 10VDC AL | 56289 | 30D107G010DC2 |
| A2C41 | 0160-2585 | 0 | 1 | CAPACITOR-FXD 2000PF +-1% 100VDC MICA | 28480 | 0160-2585 |
| A2C42 | 0160-2206 | 2 | 1 | CAPACITOR-FXD 160PF +-5% 300VDC MICA | 28480 | 0160-2206 |
| A2C43 | 0140-0233 | 9 | 2 | CAPACITOR-FXD 480PF +-1% 300VDC MICA | 72136 | DM15F481F0300WV1C |
| A2C44 | 0160-2587 | 2 | 1 | CAPACITOR-FXD 4000PF +-1% 100VDC MICA | 28480 | 0160-2587 |
| A2C45 | 0160-0841 | 7 | 1 | CAPACITOR-FXD 1740PF +-1% 300VDC MICA | 28480 | 0160-0841 |
| A2C46 | 0180-0106 | 9 | | CAPACITOR-FXD 60UF+-20% 6VDC TA | 56289 | 150D606X9006B2 |
| A2C47 | 0180-0210 | 6 | | CAPACITOR-FXD 3.3UF+-20% 15VDC TA | 56289 | 150D335X0015A2 |
| A2C48 | 0140-0176 | 9 | | CAPACITOR-FXD 100PF +-2% 300VDC MICA | 72136 | DM15F101G0300WV1CR |
| A2C49 | 0160-2960 | 5 | 18 | CAPACITOR-FXD .05UF +-20% 100VDC CER | 28480 | 0160-2960 |
| A2C51 | 0180-0210 | 6 | | CAPACITOR-FXD 3.3UF+-20% 15VDC TA | 56289 | 150D335X0015A2 |
| A2C52 | 0140-0199 | 6 | | CAPACITOR-FXD 240PF +-5% 300VDC MICA | 72136 | DM15F241J0300WV1CR |
| A2C53 | 0180-0228 | 6 | | CAPACITOR-FXD 22UF+-10% 15VDC TA | 56289 | 150D226X9015B2 |
| A2C54 | 0150-0022 | 5 | 10 | CAPACITOR-FXD 3.3PF +-10% 500VDC TI DIOX | 28480 | 0150-0022 |
| A2C55 | 0140-0176 | 9 | | CAPACITOR-FXD 100PF +-2% 300VDC MICA | 72136 | DM15F101G0300WV1CR |
| A2C56 | 0180-0063 | 7 | 1 | CAPACITOR-FXD 500UF+75-10% 3VDC AL | 56289 | 30D507G003DF2 |
| A2C57 | 0180-0228 | 6 | | CAPACITOR-FXD 22UF+-10% 15VDC TA | 56289 | 150D226X9015B2 |
| A2C58 | 0160-0174 | 9 | 2 | CAPACITOR-FXD .47UF +80-20% 25VDC CER | 28480 | 0160-0174 |
| A2C59 | 0180-0228 | 6 | | CAPACITOR-FXD 22UF+-10% 15VDC TA | 56289 | 150D226X9015B2 |
| A2C61 | 0180-0228 | 6 | | CAPACITOR-FXD 22UF+-10% 15VDC TA | 56289 | 150D226X9015B2 |
| A2C62 | 0180-0106 | 9 | | CAPACITOR-FXD 60UF+-20% 6VDC TA | 56289 | 150D606X9006B2 |
| A2C63 | 0180-0106 | 9 | | CAPACITOR-FXD 60UF+-20% 6VDC TA | 56289 | 150D606X9006B2 |
| A2C64 | 0160-0174 | 9 | | CAPACITOR-FXD .47UF +80-20% 25VDC CER | 28480 | 0160-0174 |
| A2C65 | 0180-0106 | 9 | | CAPACITOR-FXD 60UF+-20% 6VDC TA | 56289 | 150D606X9006B2 |
| A2C66 | 0150-0084 | 9 | | CAPACITOR-FXD .1UF +80-20% 100VDC CER | 28480 | 0150-0084 |
| A2C67 | 0180-0228 | 6 | | CAPACITOR-FXD 22UF+-10% 15VDC TA | 56289 | 150D226X9015B2 |
| A2C68 | 0180-0210 | 6 | | CAPACITOR-FXD 3.3UF+-20% 15VDC TA | 56289 | 150D335X0015A2 |
| A2C69 | 0180-0228 | 6 | | CAPACITOR-FXD 22UF+-10% 15VDC TA | 56289 | 150D226X9015B2 |

See introduction to this section for ordering information
*Indicates factory selected value

Replaceable Parts

## Table 6-3. Replaceable Parts (Cont'd).

| Reference Designation | HP Part Number | C D | Qty | Description | Mfr Code | Mfr Part Number |
|---|---|---|---|---|---|---|
| A2CR1 | 1901-0040 | 1 | | DIODE-SWITCHING 30V 50MA 2NS DO-35 | 28480 | 1901-0040 |
| A2CR2 | 0122-0100 | 1 | 2 | DIODE-VVC C3/C10-MIN=2.0 BVR=30V | 28480 | 0122-0100 |
| A2CR3 | 0122-0100 | 1 | | DIODE-VVC C3/C10-MIN=2.0 BVR=30V | 28480 | 0122-0100 |
| A2CR4 | 1901-0040 | 1 | | DIODE-SWITCHING 30V 50MA 2NS DO-35 | 28480 | 1901-0040 |
| A2CR5 | 1901-0040 | 1 | | DIODE-SWITCHING 30V 50MA 2NS DO-35 | 28480 | 1901-0040 |
| A2CR6 | 1901-0040 | 1 | | DIODE-SWITCHING 30V 50MA 2NS DO-35 | 28480 | 1901-0040 |
| A2CR7 | 1901-0040 | 1 | | DIODE-SWITCHING 30V 50MA 2NS DO-35 | 28480 | 1901-0040 |
| A2CR8 | 1901-0040 | 1 | | DIODE-SWITCHING 30V 50MA 2NS DO-35 | 28480 | 1901-0040 |
| A2CR9 | 1902-0041 | 4 | 4 | DIODE-ZNR 5.11V 5% DO-35 PD=.4W | 28480 | 1902-0041 |
| A2CR11 | 1901-0040 | 1 | | DIODE-SWITCHING 30V 50MA 2NS DO-35 | 28480 | 1901-0040 |
| A2CR12 | 1901-0040 | 1 | | DIODE-SWITCHING 30V 50MA 2NS DO-35 | 28480 | 1901-0040 |
| A2CR13 | 1902-0041 | 4 | | DIODE-ZNR 5.11V 5% DO-35 PD=.4W | 28480 | 1902-0041 |
| A2CR14 | 1902-0041 | 4 | | DIODE-ZNR 5.11V 5% DO-35 PD=.4W | 28480 | 1902-0041 |
| A2CR15 | 1901-0040 | 1 | | DIODE-SWITCHING 30V 50MA 2NS DO-35 | 28480 | 1901-0040 |
| A2CR16 | 1901-0040 | 1 | | DIODE-SWITCHING 30V 50MA 2NS DO-35 | 28480 | 1901-0040 |
| A2L1 | 9100-3288 | 5 | 1 | INDUCTORRF-CH-MLD 283UH 4% Q=135 | 28480 | 9100-3288 |
| A2L2 | 9140-0210 | 1 | 8 | INDUCTORRF-CH-MLD 100UH 5% .166DX.385LG | 28480 | 9140-0210 |
| A2L3 | 9100-0543 | 9 | 1 | COIL-VAR 900UH-1.1MH Q=112 PC-MTG | 28480 | 9100-0543 |
| A2L4 | 9140-0137 | 1 | 3 | INDUCTORRF-CH-MLD 1MH 5% .2DX.45LG Q=60 | 28480 | 9140-0137 |
| A2L5 | 9100-3278 | 3 | 1 | INDUCTORRF-CH-MLD 3.53MH 2% .62D Q=150 | 28480 | 9100-3278 |
| A2L6 | 9100-3277 | 2 | 2 | INDUCTORRF-CH-MLD 3.1MH 2% .62D Q=150 | 28480 | 9100-3277 |
| A2L7 | 9140-0210 | 1 | | INDUCTORRF-CH-MLD 100UH 5% .166DX.385LG | 28480 | 9140-0210 |
| A2L8 | 9140-0210 | 1 | | INDUCTORRF-CH-MLD 100UH 5% .166DX.385LG | 28480 | 9140-0210 |
| A2L9 | 9140-0210 | 1 | | INDUCTORRF-CH-MLD 100UH 5% .166DX.385LG | 28480 | 9140-0210 |
| A2L11 | 9140-0210 | 1 | | INDUCTORRF-CH-MLD 100UH 5% .166DX.385LG | 28480 | 9140-0210 |
| A2L12 | 9140-0210 | 1 | | INDUCTORRF-CH-MLD 100UH 5% .166DX.385LG | 28480 | 9140-0210 |
| A2L13 | 9140-0210 | 1 | | INDUCTORRF-CH-MLD 100UH 5% .166DX.385LG | 28480 | 9140-0210 |
| A2L14 | 9140-0210 | 1 | | INDUCTORRF-CH-MLD 100UH 5% .166DX.385LG | 28480 | 9140-0210 |
| A2Q1 | 1855-0081 | 1 | 9 | TRANSISTOR J-FET N-CHAN D-MODE SI | 01295 | 2N5245 |
| A2Q2 | 1853-0010 | 2 | 44 | TRANSISTOR PNP SI TO-18 PD=360MW | 28480 | 1853-0010 |
| A2Q3 | 1853-0010 | 2 | | TRANSISTOR PNP SI TO-18 PD=360MW | 28480 | 1853-0010 |
| A2Q4 | 1854-0071 | 7 | 67 | TRANSISTOR NPN SI PD=300MW FT=200MHZ | 28480 | 1854-0071 |
| A2Q5 | 1854-0071 | 7 | | TRANSISTOR NPN SI PD=300MW FT=200MHZ | 28480 | 1854-0071 |
| A2Q6 | 1855-0234 | 6 | 1 | TRANSISTOR-JFET DUAL N-CHAN D-MODE TO-71 | 28480 | 1855-0234 |
| A2Q7 | 1855-0081 | 1 | | TRANSISTOR J-FET N-CHAN D-MODE SI | 01295 | 2N5245 |
| A2Q8 | 1854-0354 | 9 | 2 | TRANSISTOR NPN SI TO-52 PD=360MW | 28480 | 1854-0354 |
| A2Q9 | 1853-0010 | 2 | | TRANSISTOR PNP SI TO-18 PD=360MW | 28480 | 1853-0010 |
| A2Q11 | 1853-0010 | 2 | | TRANSISTOR PNP SI TO-18 PD=360MW | 28480 | 1853-0010 |
| A2Q12 | 1854-0071 | 7 | | TRANSISTOR NPN SI PD=300MW FT=200MHZ | 28480 | 1854-0071 |
| A2Q13 | 1854-0345 | 8 | 1 | TRANSISTOR NPN 2N5179 SI TO-72 PD=200MW | 04713 | 2N5179 |
| A2Q14 | 1854-0351 | 6 | 1 | TRANSISTOR NPN SI TO-18 PD=360MW | 28480 | 1854-0351 |
| A2Q15 | 1853-0010 | 2 | | TRANSISTOR PNP SI TO-18 PD=360MW | 28480 | 1853-0010 |
| A2Q16 | 1853-0010 | 2 | | TRANSISTOR PNP SI TO-18 PD=360MW | 28480 | 1853-0010 |
| A2Q17 | 1854-0071 | 7 | | TRANSISTOR NPN SI PD=300MW FT=200MHZ | 28480 | 1854-0071 |
| A2Q18 | 1854-0071 | 7 | | TRANSISTOR NPN SI PD=300MW FT=200MHZ | 28480 | 1854-0071 |
| A2Q19 | 1854-0071 | 7 | | TRANSISTOR NPN SI PD=300MW FT=200MHZ | 28480 | 1854-0071 |
| A2Q21 | 1854-0071 | 7 | | TRANSISTOR NPN SI PD=300MW FT=200MHZ | 28480 | 1854-0071 |
| A2Q22 | 1853-0010 | 2 | | TRANSISTOR PNP SI TO-18 PD=360MW | 28480 | 1853-0010 |
| A2Q23 | 1854-0071 | 7 | | TRANSISTOR NPN SI PD=300MW FT=200MHZ | 28480 | 1854-0071 |
| A2Q24 | 1853-0010 | 2 | | TRANSISTOR PNP SI TO-18 PD=360MW | 28480 | 1853-0010 |
| A2Q25 | 1854-0071 | 7 | | TRANSISTOR NPN SI PD=300MW FT=200MHZ | 28480 | 1854-0071 |
| A2R1 | 0757-0457 | 6 | 2 | RESISTOR 47.5K 1% .125W F TC=0+-100 | 24546 | C4-1/8-T0-4752-F |
| A2R2 | 0757-0477 | 0 | 2 | RESISTOR 332K 1% .125W F TC=0+-100 | 19701 | MF4C1/8-T0-3323-F |
| A2R3 | 0698-5542 | 4 | 2 | RESISTOR 20K 1% .125W F TC=0+-25 | 28480 | 0698-5542 |
| A2R4 | 0757-0488 | 3 | 1 | RESISTOR 909K 1% .125W F TC=0+-100 | 28480 | 0757-0488 |
| A2R5 | 2100-3352 | 7 | 3 | RESISTOR-TRMR 1K 10% C SIDE-ADJ 1-TRN | 28480 | 2100-3352 |
| A2R6 | 0698-4536 | 4 | 1 | RESISTOR 340K 1% .125W F TC=0+-100 | 28480 | 0698-4536 |
| A2R7 | 0757-0430 | 5 | 6 | RESISTOR 2.21K 1% .125W F TC=0+-100 | 24546 | C4-1/8-T0-2211-F |
| A2R8 | 0757-0440 | 7 | 1 | RESISTOR 7.5K 1% .125W F TC=0+-100 | 24546 | C4-1/8-T0-7501-F |
| A2R9 | 0698-3274 | 5 | 4 | RESISTOR 10K 1% .125W F TC=0+-25 | 28480 | 0698-3274 |
| A2R10 | 0757-0430 | 5 | | RESISTOR 2.21K 1% .125W F TC=0+-100 | 24546 | C4-1/8-T0-2211-F |
| A2R11 | 0757-0438 | 3 | 24 | RESISTOR 5.11K 1% .125W F TC=0+-100 | 24546 | C4-1/8-T0-5111-F |
| A2R12 | 0757-0438 | 3 | | RESISTOR 5.11K 1% .125W F TC=0+-100 | 24546 | C4-1/8-T0-5111-F |
| A2R13 | 0757-0438 | 3 | | RESISTOR 5.11K 1% .125W F TC=0+-100 | 24546 | C4-1/8-T0-5111-F |
| A2R14 | 0757-0416 | 7 | 5 | RESISTOR 511 1% .125W F TC=0+-100 | 24546 | C4-1/8-T0-511R-F |
| A2R15 | 0698-4481 | 8 | 5 | RESISTOR 16.5K 1% .125W F TC=0+-100 | 24546 | C4-1/8-T0-1652-F |
| A2R16 | 0688-1051 | 3 | 1 | RESISTOR 1M 10% .25W FC TC=-800/+900 | 01121 | CB1051 |
| A2R17 | 0757-0427 | 0 | 6 | RESISTOR 1.5K 1% .125W F TC=0+-100 | 24546 | C4-1/8-T0-1501-F |
| A2R18 | 0698-3497 | 4 | 4 | RESISTOR 6.04K 1% .125W F TC=0+-100 | 24546 | C4-1/8-T0-6040-F |
| A2R19 | 0698-4483 | 2 | 1 | RESISTOR 4.53K 1% .125W F TC=0+-100 | 24546 | C4-1/8-T0-4531-F |
| A2R21 | 0757-0430 | 5 | | RESISTOR 2.21K 1% .125W F TC=0+-100 | 24546 | C4-1/8-T0-2211-F |
| A2R22 | 0757-0280 | 3 | | RESISTOR 1K 1% .125W F TC=0+-100 | 24546 | C4-1/8-T0-1001-F |
| A2R23 | 0757-0442 | 9 | 28 | RESISTOR 10K 1% .125W F TC=0+-100 | 24546 | C4-1/8-T0-1002-F |
| A2R24 | 0757-0427 | 0 | | RESISTOR 1.5K 1% .125W F TC=0+-100 | 24546 | C4-1/8-T0-1501-F |
| A2R25 | 0757-0415 | 6 | 1 | RESISTOR 475 1% .125W F TC=0+-100 | 24546 | C4-1/8-T0-475R-F |
| A2R26 | 0757-0407 | 6 | 7 | RESISTOR 200 1% .125W F TC=0+-100 | 24546 | C4-1/8-T0-201-F |

See introduction to this section for ordering information
*Indicates factory selected value

Replaceable Parts

## Table 6-3. Replaceable Parts (Cont'd).

| Reference Designation | HP Part Number | C D | Qty | Description | Mfr Code | Mfr Part Number |
|---|---|---|---|---|---|---|
| A2R27 | 0684-1041 | 1 | 56 | RESISTOR 100K 10% .25W FC TC=-400/+800 | 01121 | CB1041 |
| A2R28 | 0684-1031 | 9 | 26 | RESISTOR 10K 10% .25W FC TC=-400/+700 | 01121 | CB1031 |
| A2R29 | 0684-4731 | 2 | 15 | RESISTOR 47K 10% .25W FC TC=-400/+800 | 01121 | CB4731 |
| A2R31 | 0757-0449 | 6 | 37 | RESISTOR 20K 1% .125W F TC=0+-100 | 24546 | C4-1/8-T0-2002-F |
| A2R32 | 0757-0449 | 6 | | RESISTOR 20K 1% .125W F TC=0+-100 | 24546 | C4-1/8-T0-2002-F |
| A2R33 | 0698-3274 | 5 | | RESISTOR 10K 1% .125W F TC=0+-25 | 28480 | 0698-3274 |
| A2R34 | 0698-3450 | 9 | 1 | RESISTOR 42.2K 1% .125W F TC=0+-100 | 24546 | C4-1/8-T0-4222-F |
| A2R35 | 0698-3274 | 5 | | RESISTOR 10K 1% .125W F TC=0+-25 | 28480 | 0698-3274 |
| A2R36 | 0698-3274 | 5 | | RESISTOR 10K 1% .125W F TC=0+-25 | 28480 | 0698-3274 |
| A2R37 | 0698-5542 | 4 | | RESISTOR 20K 1% .125W F TC=0+-25 | 28480 | 0698-5542 |
| A2R38 | 0698-6338 | 8 | 1 | RESISTOR 5K 1% .125W F TC=0+-25 | 28480 | 0698-6338 |
| A2R39 | 0684-4721 | 0 | 5 | RESISTOR 4.7K 10% .25W FC TC=-400/+700 | 01121 | CB4721 |
| A2R41 | 0684-4721 | 0 | | RESISTOR 4.7K 10% .25W FC TC=-400/+700 | 01121 | CB4721 |
| A2R42 | 0684-4721 | 0 | | RESISTOR 4.7K 10% .25W FC TC=-400/+700 | 01121 | CB4721 |
| A2R43 | 0757-0438 | 3 | | RESISTOR 5.11K 1% .125W F TC=0+-100 | 24546 | C4-1/8-T0-5111-F |
| A2R44 | 0757-0438 | 3 | | RESISTOR 5.11K 1% .125W F TC=0+-100 | 24546 | C4-1/8-T0-5111-F |
| A2R45 | 0698-0660 | 5 | 1 | RESISTOR 9.31K 1% .125W F TC=0+-100 | 91637 | CMF-1/8-T1-9311-F |
| A2R46 | 0684-1031 | 9 | | RESISTOR 10K 10% .25W FC TC=-400/+700 | 01121 | CB1031 |
| A2R47 | 0684-1031 | 9 | | RESISTOR 10K 10% .25W FC TC=-400/+700 | 01121 | CB1031 |
| A2R48 | 0757-0446 | 3 | 6 | RESISTOR 15K 1% .125W F TC=0+-100 | 24546 | C4-1/8-T0-1502-F |
| A2R49 | 0757-0446 | 3 | | RESISTOR 15K 1% .125W F TC=0+-100 | 24546 | C4-1/8-T0-1502-F |
| A2R51 | 0698-4447 | 6 | 2 | RESISTOR 280 1% .125W F TC=0+-100 | 24546 | C4-1/8-T0-280R-F |
| A2R52 | 0757-0427 | 0 | | RESISTOR 1.5K 1% .125W F TC=0+-100 | 24546 | C4-1/8-T0-1501-F |
| A2R53 | 0698-4447 | 6 | | RESISTOR 280 1% .125W F TC=0+-100 | 24546 | C4-1/8-T0-280R-F |
| A2R54 | 0757-0442 | 9 | | RESISTOR 10K 1% .125W F TC=0+-100 | 24546 | C4-1/8-T0-1002-F |
| A2R55 | 0698-4435 | 2 | 3 | RESISTOR 2.49K 1% .125W F TC=0+-100 | 24546 | C4-1/8-T0-2491-F |
| A2R56 | 0757-0438 | 3 | | RESISTOR 5.11K 1% .125W F TC=0+-100 | 24546 | C4-1/8-T0-5111-F |
| A2R57 | 0757-0381 | 5 | 1 | RESISTOR 15 1% .125W F TC=0+-100 | 19701 | MFAC1/8-T0-15R0-F |
| A2R58 | 0683-0825 | 5 | 1 | RESISTOR 8.2 5% .25W FC TC=-400/+500 | 01121 | CB8265 |
| A2R59 | 0757-0438 | 3 | | RESISTOR 5.11K 1% .125W F TC=0+-100 | 24546 | C4-1/8-T0-5111-F |
| A2R61 | 0757-0438 | 3 | | RESISTOR 5.11K 1% .125W F TC=0+-100 | 24546 | C4-1/8-T0-5111-F |
| A2R62 | 0757-0416 | 7 | | RESISTOR 511 1% .125W F TC=0+-100 | 24546 | C4-1/8-T0-511R-F |
| A2R63 | 0757-0280 | 3 | | RESISTOR 1K 1% .125W F TC=0+-100 | 24546 | C4-1/8-T0-1001-F |
| A2R64 | 0698-3449 | 6 | 2 | RESISTOR 28.7K 1% .125W F TC=0+-100 | 24546 | C4-1/8-T0-2872-F |
| A2R65* | 0698-9999 | 9 | 3 | RESISTOR-FXD PAD VALUE | 28480 | 0698-9999 |
| A2R66 | 0698-4505 | 7 | 2 | RESISTOR 71.5K 1% .125W F TC=0+-100 | 24546 | C4-1/8-T0-7152-F |
| A2R67 | 0757-0442 | 9 | | RESISTOR 10K 1% .125W F TC=0+-100 | 24546 | C4-1/8-T0-1002-F |
| A2R68 | 0757-0446 | 3 | | RESISTOR 15K 1% .125W F TC=0+-100 | 24546 | C4-1/8-T0-1502-F |
| A2R69 | 0684-2231 | 3 | 10 | RESISTOR 22K 10% .25W FC TC=-400/+800 | 01121 | CB2231 |
| A2R71 | 0757-0416 | 7 | | RESISTOR 511 1% .125W F TC=0+-100 | 24546 | C4-1/8-T0-511R-F |
| A2R72 | 0684-4741 | 4 | 4 | RESISTOR 470K 10% .25W FC TC=-800/+900 | 01121 | CB4741 |
| A2R73 | 0698-3958 | 8 | 5 | RESISTOR 4.02K 1% .125W F TC=0+-100 | 24546 | C4-1/8-T0-4021-F |
| A2R74 | 0698-3558 | 8 | | RESISTOR 4.02K 1% .125W F TC=0+-100 | 24546 | C4-1/8-T0-4021-F |
| A2R75 | 2100-3054 | 6 | 1 | RESISTOR-TRMR 50K 10% C SIDE-ADJ 17-TRN | 02111 | 43P503 |
| A2R76 | 0698-4486 | 3 | 12 | RESISTOR 24.9K 1% .125W F TC=0+-100 | 24546 | C4-1/8-T0-2492-F |
| A2R77 | 0757-0280 | 3 | | RESISTOR 1K 1% .125W F TC=0+-100 | 24546 | C4-1/8-T0-1001-F |
| A2R78 | 0698-4486 | 3 | | RESISTOR 24.9K 1% .125W F TC=0+-100 | 24546 | C4-1/8-T0-2492-F |
| A2R79 | 0757-0416 | 7 | | RESISTOR 511 1% .125W F TC=0+-100 | 24546 | C4-1/8-T0-511R-F |
| A2R81 | 0757-0416 | 7 | | RESISTOR 511 1% .125W F TC=0+-100 | 24546 | C4-1/8-T0-511R-F |
| A2R82 | 0757-0280 | 3 | | RESISTOR 1K 1% .125W F TC=0+-100 | 24546 | C4-1/8-T0-1001-F |
| A2R83 | 0757-0280 | 3 | | RESISTOR 1K 1% .125W F TC=0+-100 | 24546 | C4-1/8-T0-1001-F |
| A2R84 | 0757-0421 | 4 | 1 | RESISTOR 825 1% .125W F TC=0+-100 | 24546 | C4-1/8-T0-825R-F |
| A2R85 | 0757-0446 | 3 | | RESISTOR 15K 1% .125W F TC=0+-100 | 24546 | C4-1/8-T0-1502-F |
| A2R86 | 0698-3497 | 4 | | RESISTOR 6.04K 1% .125W F TC=0+-100 | 24546 | C4-1/8-T0-604R-F |
| A2R87 | 0698-4425 | 0 | 1 | RESISTOR 1.54K 1% .125W F TC=0+-100 | 24546 | C4-1/8-T0-1541-F |
| A2R88 | 0684-2231 | 3 | | RESISTOR 22K 10% .25W FC TC=-400/+800 | 01121 | CB2231 |
| A2R89 | 0684-1041 | 1 | | RESISTOR 100K 10% .25W FC TC=-400/+800 | 01121 | CB1041 |
| A2R91 | 0684-1001 | 3 | 1 | RESISTOR 10 10% .25W FC TC=-400/+500 | 01121 | CB1001 |
| A2R92 | 0684-1031 | 9 | | RESISTOR 10K 10% .25W FC TC=-400/+700 | 01121 | CB1031 |
| A2R93 | 0698-4484 | 1 | 4 | RESISTOR 19.1K 1% .125W F TC=0+-100 | 24546 | C4-1/8-T0-1912-F |
| A2R94 | 0757-0430 | 5 | | RESISTOR 2.21K 1% .125W F TC=0+-100 | 24546 | C4-1/8-T0-2211-F |
| A2R95 | 0684-3921 | 0 | 1 | RESISTOR 3.9K 10% .25W FC TC=-400/+700 | 01121 | CB3921 |
| A2R96 | 0698-4461 | 4 | 2 | RESISTOR 698 1% .125W F TC=0+-100 | 24546 | C4-1/8-T0-698R-F |
| A2R97 | 0698-4461 | 4 | | RESISTOR 698 1% .125W F TC=0+-100 | 24546 | C4-1/8-T0-698R-F |
| A2R98 | 0757-0458 | 7 | 8 | RESISTOR 51.1K 1% .125W F TC=0+-100 | 24546 | C4-1/8-T0-5112-F |
| A2R99 | 0684-1011 | 5 | 4 | RESISTOR 100 10% .25W FC TC=-400/+500 | 01121 | CB1011 |
| A2R100 | 2100-3207 | 1 | 1 | RESISTOR-TRMR 5K 10% C SIDE-ADJ 1-TRN | 28480 | 2100-3207 |
| A2R101 | 0757-0427 | 0 | | RESISTOR 1.5K 1% .125W F TC=0+-100 | 24546 | C4-1/8-T0-1501-F |
| A2R102 | 0757-0446 | 3 | | RESISTOR 15K 1% .125W F TC=0+-100 | 24546 | C4-1/8-T0-1502-F |
| A2R103 | 0757-0280 | 3 | | RESISTOR 1K 1% .125W F TC=0+-100 | 24546 | C4-1/8-T0-1001-F |
| A2R104 | 0698-3488 | 3 | 4 | RESISTOR 442 1% .125W F TC=0+-100 | 24546 | C4-1/8-T0-442R-F |
| A2R105 | 0757-0448 | 5 | 2 | RESISTOR 18.2K 1% .125W F TC=0+-100 | 24546 | C4-1/8-T0-1822-F |
| A2R106 | 0757-0401 | 0 | 9 | RESISTOR 100 1% .125W F TC=0+-100 | 24546 | C4-1/8-T0-101-F |
| A2R107 | 0757-0401 | 0 | | RESISTOR 100 1% .125W F TC=0+-100 | 24546 | C4-1/8-T0-101-F |
| A2R108* | 0698-4459 | 0 | 1 | RESISTOR 634 1% .125W F TC=0+-100 | 24546 | C4-1/8-T0-634R-F |

See introduction to this section for ordering information
*Indicates factory selected value

## Table 6-3. Replaceable Parts (Cont'd).

| Reference Designation | HP Part Number | C D | Qty | Description | Mfr Code | Mfr Part Number |
|---|---|---|---|---|---|---|
| A2R109 | 0684-1031 | 9 | | RESISTOR 10K 10% .25W FC TC=-400/+700 | 01121 | CB1031 |
| A2R111 | 0684-1011 | 5 | | RESISTOR 100 10% .25W FC TC=-400/+500 | 01121 | CB1011 |
| A2R112 | 0684-4701 | 6 | 4 | RESISTOR 47 10% .25W FC TC=-400/+500 | 01121 | CB4701 |
| A2R113 | 2100-3357 | 2 | 3 | RESISTOR-TRMR 500K 10% C SIDE-ADJ 1-TRN | 28480 | 2100-3357 |
| A2R114 | 0684-5631 | 3 | 3 | RESISTOR 56K 10% .25W FC TC=-400/+800 | 01121 | CB5631 |
| A2R115 | 0683-2215 | 1 | 1 | RESISTOR 220 5% .25W FC TC=-400/+600 | 01121 | CB2215 |
| A2U1 | 1826-0043 | 4 | 13 | IC OP AMP GP TO-99 | 01928 | CA3077 |
| A2U2 | 1820-1490 | 5 | 3 | IC CNTR TTL LS DECD ASYNCHRO | 01295 | SN74LS90N |
| A2U3 | 1826-0043 | 4 | | IC OP AMP GP TO-99 | 01928 | CA3077 |
| A2U4 | 1826-0043 | 4 | | IC OP AMP GP TO-99 | 01928 | CA3077 |
| A2U5 | 1820-1490 | 5 | | IC CNTR TTL LS DECD ASYNCHRO | 01295 | SN74LS90N |
| A2U6 | 1820-0304 | 8 | 1 | IC FF TTL J-K M/S PULSE PRESET/CLEAR | 01295 | SN7472N |
| A2U7 | 1820-0427 | 6 | 2 | IC MODULATOR TO-100 | 04713 | MC1496G |
| A2U8 | 1820-1490 | 5 | | IC CNTR TTL LS DECD ASYNCHRO | 01295 | SN74LS90N |
| A2U9 | 1820-0058 | 9 | 3 | IC OP AMP GP TO-99 | 24046 | TOA 2709V |
| A2U11 | 1820-1202 | 7 | 2 | IC GATE TTL LS NAND TPL 3-INP | 01295 | SN74LS10N |
| A2U12 | 1820-0099 | 8 | 1 | IC CNTR TTL 8IN ASYNCHRO NEG-EDGE-TRIG | 01295 | SN7493N |
| A2U13 | 1820-0475 | 4 | 1 | IC COMPARATOR H8 TO-99 | 27014 | LM306H |
| A2Y1 | 1820-0475 | | 1 | CRYSTAL:NOT FIELD REPLACEABLE (SEE PARA. 7-25) | 28480 | 1820-0475 |
| A3 | 03580-66503 | 9 | 1 | BOARD ASSEMBLY-SWEEP | 28480 | 03580-66503 |
| A3C1 | 0180-1743 | 2 | 3 | CAPACITOR-FXD .1UF+-10% 35VDC TA | 56289 | 150D104X9035A2 |
| A3C2 | 0150-0093 | 0 | | CAPACITOR-FXD .01UF +80-20% 100VDC CER | 28480 | 0150-0093 |
| A3C3 | 0180-0197 | 8 | 18 | CAPACITOR-FXD 2.2UF+-10% 20VDC TA | 56289 | 150D225X9020A2 |
| A3C4 | 0150-0050 | 9 | | CAPACITOR-FXD 1000PF +80-20% 1KVDC CER | 28480 | 0150-0050 |
| A3C5 | 0150-0050 | 9 | | CAPACITOR-FXD 1000PF +80-20% 1KVDC CER | 28480 | 0150-0050 |
| A3C6 | 0150-0050 | 9 | | CAPACITOR-FXD 1000PF +80-20% 1KVDC CER | 28480 | 0150-0050 |
| A3C7 | 0180-1701 | 2 | | CAPACITOR-FXD 6.8UF+-20% 6VDC TA | 56289 | 150D685X0006A2 |
| A3C8 | 0150-0050 | 9 | | CAPACITOR-FXD 1000PF +80-20% 1KVDC CER | 28480 | 0150-0050 |
| A3C9 | 0150-0093 | 0 | | CAPACITOR-FXD .01UF +80-20% 100VDC CER | 28480 | 0150-0093 |
| A3C10 | 0160-2150 | 5 | | CAPACITOR-FXD 33PF +-5% 300VDC MICA | 28480 | 0160-2150 |
| A3C11 | 0150-0050 | 9 | | CAPACITOR-FXD 1000PF +80-20% 1KVDC CER | 28480 | 0150-0050 |
| A3C12 | 0180-0197 | 8 | | CAPACITOR-FXD 2.2UF+-10% 20VDC TA | 56289 | 150D225X9020A2 |
| A3C13 | 0160-2150 | 5 | | CAPACITOR-FXD 33PF +-5% 300VDC MICA | 28480 | 0160-2150 |
| A3C14 | 0170-0042 | 1 | 2 | CAPACITOR-FXD .33UF +-5% 100VDC POLYE | 99515 | E1-334D |
| A3C15 | 0180-1743 | 2 | | CAPACITOR-FXD .1UF+-10% 35VDC TA | 56289 | 150D104X9035A2 |
| A3C16 | 0160-2611 | 3 | 1 | CAPACITOR-FXD 1UF +-10% 50VDC MET-POLYE | 28480 | 0160-2611 |
| A3C17 | 0160-0168 | 1 | 1 | CAPACITOR-FXD .1UF +-10% 200VDC POLYE | 28480 | 0160-0168 |
| A3C18 | 0150-0050 | 9 | | CAPACITOR-FXD 1000PF +80-20% 1KVDC CER | 28480 | 0150-0050 |
| A3C19 | 0180-0197 | 8 | | CAPACITOR-FXD 2.2UF+-10% 20VDC TA | 56289 | 150D225X9020A2 |
| A3C20 | 0150-0050 | 9 | | CAPACITOR-FXD 1000PF +80-20% 1KVDC CER | 28480 | 0150-0050 |
| A3C21 | 0160-0170 | 5 | 3 | CAPACITOR-FXD .22UF +80-20% 25VDC CER | 28480 | 0160-0170 |
| A3C22 | 0160-0170 | 5 | | CAPACITOR-FXD .22UF +80-20% 25VDC CER | 28480 | 0160-0170 |
| A3C23 | 0160-0170 | 5 | | CAPACITOR-FXD .22UF +80-20% 25VDC CER | 28480 | 0160-0170 |
| A3C24 | 0140-0199 | 6 | | CAPACITOR-FXD 240PF +-5% 300VDC MICA | 72136 | DM15F241J0300WV1CR |
| A3CR1 | 1901-0040 | 1 | | DIODE-SWITCHING 30V 50MA 2NS DO-35 | 28480 | 1901-0040 |
| A3CR2 | 1902-3128 | 4 | 3 | DIODE-ZNR 7.32V 5% DO-35 PD=.4W | 28480 | 1902-3128 |
| A3CR3 | 1910-0016 | 0 | 6 | DIODE-GE 60V 60MA 1US DO-7 | 28480 | 1910-0016 |
| A3CR4 | 1910-0016 | 0 | | DIODE-GE 60V 60MA 1US DO-7 | 28480 | 1910-0016 |
| A3CR5 | 1910-0016 | 0 | | DIODE-GE 60V 60MA 1US DO-7 | 28480 | 1910-0016 |
| A3CR6 | 1901-0040 | 1 | | DIODE-SWITCHING 30V 50MA 2NS DO-35 | 28480 | 1901-0040 |
| A3CR7 | 1901-0040 | 1 | | DIODE-SWITCHING 30V 50MA 2NS DO-35 | 28480 | 1901-0040 |
| A3CR8 | 1901-0040 | 1 | | DIODE-SWITCHING 30V 50MA 2NS DO-35 | 28480 | 1901-0040 |
| A3CR9 | 1901-0040 | 1 | | DIODE-SWITCHING 30V 50MA 2NS DO-35 | 28480 | 1901-0040 |
| A3CR11 | 1901-0040 | 1 | | DIODE-SWITCHING 30V 50MA 2NS DO-35 | 28480 | 1901-0040 |
| A3CR12 | 1910-0016 | 0 | | DIODE-GE 60V 60MA 1US DO-7 | 28480 | 1910-0016 |
| A3CR13 | 1901-0040 | 1 | | DIODE-SWITCHING 30V 50MA 2NS DO-35 | 28480 | 1901-0040 |
| A3CR14 | 1901-0040 | 1 | | DIODE-SWITCHING 30V 50MA 2NS DO-35 | 28480 | 1901-0040 |
| A3CR15 | 1901-0040 | 1 | | DIODE-SWITCHING 30V 50MA 2NS DO-35 | 28480 | 1901-0040 |
| A3CR16 | 1901-0586 | 0 | 1 | DIODE-GEN PRP 30V 25MA TO-72 | 28480 | 1901-0586 |
| A3CR17 | 1902-3182 | 0 | 2 | DIODE-ZNR 12.1V 5% DO-35 PD=.4W | 28480 | 1902-3182 |
| A3CR18 | 1901-0040 | 1 | | DIODE-SWITCHING 30V 50MA 2NS DO-35 | 28480 | 1901-0040 |
| A3CR19 | 1901-0040 | 1 | | DIODE-SWITCHING 30V 50MA 2NS DO-35 | 28480 | 1901-0040 |
| A3CR21 | 1902-3128 | 4 | | DIODE-ZNR 7.32V 5% DO-35 PD=.4W | 28480 | 1902-3128 |
| A3CR22 | 1901-0040 | 1 | | DIODE-SWITCHING 30V 50MA 2NS DO-35 | 28480 | 1901-0040 |
| A3CR23 | 1901-0040 | 1 | | DIODE-SWITCHING 30V 50MA 2NS DO-35 | 28480 | 1901-0040 |
| A3CR24 | 1902-3085 | 2 | 1 | DIODE-ZNR 4.75V 5% DO-35 PD=.4W | 28480 | 1902-3085 |
| A3Q1 | 1855-0237 | 9 | 2 | TRANSISTOR-JFET DUAL N-CHAN D-MODE TO-78 | 28480 | 1855-0237 |
| A3Q2 | 1854-0071 | 7 | | TRANSISTOR NPN SI PD=300MW FT=200MHZ | 28480 | 1854-0071 |
| A3Q3 | 1855-0368 | 7 | 4 | TRANSISTOR J-FET N-CHAN D-MODE TO-72 SI | 28480 | 1855-0368 |
| A3Q4 | 1853-0010 | 2 | | TRANSISTOR PNP SI TO-18 PD=360MW | 28480 | 1853-0010 |
| A3Q5 | 1855-0082 | 2 | 1 | TRANSISTOR J-FET P-CHAN D-MODE SI | 28480 | 1855-0082 |
| A3Q6 | 1854-0071 | 7 | | TRANSISTOR NPN SI PD=300MW FT=200MHZ | 28480 | 1854-0071 |
| A3Q7 | 1854-0071 | 7 | | TRANSISTOR NPN SI PD=300MW FT=200MHZ | 28480 | 1854-0071 |
| A3Q8 | 1854-0071 | 7 | | TRANSISTOR NPN SI PD=300MW FT=200MHZ | 28480 | 1854-0071 |
| A3Q9 | 1854-0071 | 7 | | TRANSISTOR NPN SI PD=300MW FT=200MHZ | 28480 | 1854-0071 |
| A3Q11 | 1854-0087 | 5 | 4 | TRANSISTOR NPN SI PD=360MW FT=75MHZ | 28480 | 1854-0087 |

See introduction to this section for ordering information
*Indicates factory selected value

Replaceable Parts

## Table 6-3. Replaceable Parts (Cont'd).

| Reference Designation | HP Part Number | C D | Qty | Description | Mfr Code | Mfr Part Number |
|---|---|---|---|---|---|---|
| A3Q12 | 1854-0071 | 7 | | TRANSISTOR NPN SI PD=300MW FT=200MHZ | 28480 | 1854-0071 |
| A3Q13 | 1854-0071 | 7 | | TRANSISTOR NPN SI PD=300MW FT=200MHZ | 28480 | 1854-0071 |
| A3Q14 | 1855-0308 | 5 | 1 | TRANSISTOR-JFET DUAL N-CHAN D-MODE SI | 28480 | 1855-0308 |
| A3Q15 | 1855-0386 | 9 | 1 | TRANSISTOR J-FET 2N4392 N-CHAN D-MODE | 04713 | 2N4392 |
| A3Q16 | 1853-0010 | 2 | | TRANSISTOR PNP SI TO-18 PD=360MW | 28480 | 1853-0010 |
| A3Q17 | 1854-0071 | 7 | | TRANSISTOR NPN SI PD=300MW FT=200MHZ | 28480 | 1854-0071 |
| A3Q18 | 1854-0071 | 7 | | TRANSISTOR NPN SI PD=300MW FT=200MHZ | 28480 | 1854-0071 |
| A3Q19 | 1854-0071 | 7 | | TRANSISTOR NPN SI PD=300MW FT=200MHZ | 28480 | 1854-0071 |
| A3Q21 | 1853-0010 | 2 | | TRANSISTOR PNP SI TO-18 PD=360MW | 28480 | 1853-0010 |
| A3Q22 | 1854-0087 | 5 | | TRANSISTOR NPN SI PD=360MW FT=75MHZ | 28480 | 1854-0087 |
| A3Q23 | 1853-0010 | 2 | | TRANSISTOR PNP SI TO-18 PD=360MW | 28480 | 1853-0010 |
| A3Q24 | 1854-0071 | 7 | | TRANSISTOR NPN SI PD=300MW FT=200MHZ | 28480 | 1854-0071 |
| A3Q25 | 1854-0354 | 9 | | TRANSISTOR NPN SI TO-52 PD=360MW | 28480 | 1854-0354 |
| A3Q26 | 1853-0010 | 2 | | TRANSISTOR PNP SI TO-18 PD=360MW | 28480 | 1853-0010 |
| A3Q27 | 1853-0010 | 2 | | TRANSISTOR PNP SI TO-18 PD=360MW | 28480 | 1853-0010 |
| A3Q28 | 1853-0010 | 2 | | TRANSISTOR PNP SI TO-18 PD=360MW | 28480 | 1853-0010 |
| A3Q29 | 1853-0010 | 2 | | TRANSISTOR PNP SI TO-18 PD=360MW | 28480 | 1853-0010 |
| A3Q31 | 1853-0010 | 2 | | TRANSISTOR PNP SI TO-18 PD=360MW | 28480 | 1853-0010 |
| A3Q32 | 1855-0368 | 7 | | TRANSISTOR J-FET N-CHAN D-MODE TO-72 SI | 28480 | 1855-0368 |
| A3Q33 | 1855-0237 | 9 | | TRANSISTOR-JFET DUAL N-CHAN D-MODE TO-78 | 28480 | 1855-0237 |
| A3Q34 | 1854-0071 | 7 | | TRANSISTOR NPN SI PD=300MW FT=200MHZ | 28480 | 1854-0071 |
| A3Q35 | 1855-0368 | 7 | | TRANSISTOR J-FET N-CHAN D-MODE TO-72 SI | 28480 | 1855-0368 |
| A3Q36 | 1855-0368 | 7 | | TRANSISTOR J-FET N-CHAN D-MODE TO-72 SI | 28480 | 1855-0368 |
| A3Q37 | 1853-0016 | 8 | 5 | TRANSISTOR PNP SI TO-92 PD=300MW | 28480 | 1853-0016 |
| A3Q38 | 1854-0071 | 7 | | TRANSISTOR NPN SI PD=300MW FT=200MHZ | 28480 | 1854-0071 |
| A3Q39 | 1853-0016 | 8 | | TRANSISTOR PNP SI TO-92 PD=300MW | 28480 | 1853-0016 |
| A3Q41 | 1853-0016 | 8 | | TRANSISTOR PNP SI TO-92 PD=300MW | 28480 | 1853-0016 |
| A3Q42 | 1854-0087 | 5 | | TRANSISTOR NPN SI PD=360MW FT=75MHZ | 28480 | 1854-0087 |
| A3Q43 | 1854-0087 | 5 | | TRANSISTOR NPN SI PD=360MW FT=75MHZ | 28480 | 1854-0087 |
| A3Q44 | 1853-0016 | 8 | | TRANSISTOR PNP SI TO-92 PD=300MW | 28480 | 1853-0016 |
| A3R1 | 0698-4479 | 4 | 2 | RESISTOR 14K 1% .125W F TC=0+-100 | 24546 | C4-1/8-TO-1402-F |
| A3R2 | 0757-0426 | 9 | 3 | RESISTOR 1.3K 1% .125W F TC=0+-100 | 24546 | C4-1/8-TO-1301-F |
| A3R3 | 0698-4479 | 4 | | RESISTOR 14K 1% .125W F TC=0+-100 | 24546 | C4-1/8-TO-1402-F |
| A3R4 | 0757-0272 | 3 | 2 | RESISTOR 52.3K 1% .125W F TC=0+-100 | 24546 | C4-1/8-TO-5232-F |
| A3R5 | 0684-1031 | 9 | | RESISTOR 10K 10% .25W FC TC=-400/+700 | 01121 | CB1031 |
| A3R6 | 0684-5641 | 5 | 3 | RESISTOR 560K 10% .25W FC TC=-800/+900 | 01121 | CB5641 |
| A3R7 | 0684-1041 | 1 | | RESISTOR 100K 10% .25W FC TC=-400/+800 | 01121 | CB1041 |
| A3R8 | 0684-1041 | 1 | | RESISTOR 100K 10% .25W FC TC=-400/+800 | 01121 | CB1041 |
| A3R9 | 0684-3331 | 6 | 12 | RESISTOR 33K 10% .25W FC TC=-400/+800 | 01121 | CB3331 |
| A3R11 | 0757-0457 | 6 | | RESISTOR 47.5K 1% .125W F TC=0+-100 | 24546 | C4-1/8-TO-4752-F |
| A3R12 | 0698-3228 | 9 | | RESISTOR 49.9K 1% .125W F TC=0+-100 | 28480 | 0698-3228 |
| A3R13 | 0698-4486 | 3 | | RESISTOR 24.9K 1% .125W F TC=0+-100 | 24546 | C4-1/8-TO-2492-F |
| A3R14 | 2100-3273 | 1 | 5 | RESISTOR-TRMR 2K 10% C SIDE-ADJ 1-TRN | 28480 | 2100-3273 |
| A3R15 | 0757-0483 | 8 | 2 | RESISTOR 562K 1% .125W F TC=0+-100 | 28480 | 0757-0483 |
| A3R16 | 0683-3325 | 6 | 2 | RESISTOR 3.3K 5% .25W FC TC=-400/+700 | 01121 | CB3325 |
| A3R17 | 0684-4731 | 2 | | RESISTOR 47K 10% .25W FC TC=-400/+800 | 01121 | CB4731 |
| A3R18 | 0684-6831 | 7 | 2 | RESISTOR 68K 10% .25W FC TC=-400/+800 | 01121 | CB6831 |
| A3R19 | 0684-1041 | 1 | | RESISTOR 100K 10% .25W FC TC=-400/+800 | 01121 | CB1041 |
| A3R21 | 0757-0442 | 9 | | RESISTOR 10K 1% .125W F TC=0+-100 | 24546 | C4-1/8-TO-1002-F |
| A3R22 | 0698-4486 | 3 | | RESISTOR 24.9K 1% .125W F TC=0+-100 | 24546 | C4-1/8-TO-2492-F |
| A3R23 | 0684-1061 | 5 | 1 | RESISTOR 10M 10% .25W FC TC=-900/+1100 | 01121 | CB1061 |
| A3R24 | 0757-0442 | 9 | | RESISTOR 10K 1% .125W F TC=0+-100 | 24546 | C4-1/8-TO-1002-F |
| A3R25 | 0757-0442 | 9 | | RESISTOR 10K 1% .125W F TC=0+-100 | 24546 | C4-1/8-TO-1002-F |
| A3R26 | 0684-1041 | 1 | | RESISTOR 100K 10% .25W FC TC=-400/+800 | 01121 | CB1041 |
| A3R27 | 0684-1041 | 1 | | RESISTOR 100K 10% .25W FC TC=-400/+800 | 01121 | CB1041 |
| A3R28 | 0684-1041 | 1 | | RESISTOR 100K 10% .25W FC TC=-400/+800 | 01121 | CB1041 |
| A3R29 | 0698-4484 | 1 | | RESISTOR 19.1K 1% .125W F TC=0+-100 | 24546 | C4-1/8-TO-1912-F |
| A3R31 | 0698-4484 | 1 | | RESISTOR 19.1K 1% .125W F TC=0+-100 | 24546 | C4-1/8-TO-1912-F |
| A3R32 | 0684-1031 | 9 | | RESISTOR 10K 10% .25W FC TC=-400/+700 | 01121 | CB1031 |
| A3R33 | 0698-4489 | 6 | | RESISTOR 28K 1% .125W F TC=0+-100 | 24546 | C4-1/8-TO-2802-F |
| A3R34 | 0684-1011 | 5 | | RESISTOR 100 10% .25W FC TC=-400/+500 | 01121 | CB1011 |
| A3R35 | 0684-1041 | 1 | | RESISTOR 100K 10% .25W FC TC=-400/+800 | 01121 | CB1041 |
| A3R36 | 0684-1041 | 1 | | RESISTOR 100K 10% .25W FC TC=-400/+800 | 01121 | CB1041 |
| A3R37 | 0684-4731 | 2 | | RESISTOR 47K 10% .25W FC TC=-400/+800 | 01121 | CB4731 |
| A3R38 | 0684-2251 | 7 | 1 | RESISTOR 2.2M 10% .25W FC TC=-900/+1100 | 01121 | CB2251 |
| A3R39 | 0684-3331 | 6 | | RESISTOR 33K 10% .25W FC TC=-400/+800 | 01121 | CB3331 |
| A3R41 | 0684-1531 | 4 | 16 | RESISTOR 15K 10% .25W FC TC=-400/+800 | 01121 | CB1531 |
| A3R42 | 0684-5621 | 1 | 10 | RESISTOR 5.6K 10% .25W FC TC=-400/+700 | 01121 | CB5621 |
| A3R43 | 0684-1041 | 1 | | RESISTOR 100K 10% .25W FC TC=-400/+800 | 01121 | CB1041 |
| A3R44 | 0684-1031 | 9 | | RESISTOR 10K 10% .25W FC TC=-400/+700 | 01121 | CB1031 |
| A3R45 | 0684-1041 | 1 | | RESISTOR 100K 10% .25W FC TC=-400/+800 | 01121 | CB1041 |
| A3R46 | 0684-4731 | 2 | | RESISTOR 47K 10% .25W FC TC=-400/+800 | 01121 | CB4731 |
| A3R47 | 0684-1031 | 9 | | RESISTOR 10K 10% .25W FC TC=-400/+700 | 01121 | CB1031 |
| A3R48 | 0684-1041 | 1 | | RESISTOR 100K 10% .25W FC TC=-400/+800 | 01121 | CB1041 |
| A3R49 | 0684-4731 | 2 | | RESISTOR 47K 10% .25W FC TC=-400/+800 | 01121 | CB4731 |

See introduction to this section for ordering information
*Indicates factory selected value

Replaceable Parts

## Table 6-3. Replaceable Parts (Cont'd).

| Reference Designation | HP Part Number | C D | Qty | Description | Mfr Code | Mfr Part Number |
|---|---|---|---|---|---|---|
| A3R51 | 0684-4731 | 2 | | RESISTOR 47K 10% .25W FC TC=-400/+800 | 01121 | CB4731 |
| A3R52 | 0683-1635 | 7 | 1 | RESISTOR 16K 5% .25W FC TC=-400/+800 | 01121 | CB1635 |
| A3R53 | 0684-1041 | 1 | | RESISTOR 100K 10% .25W FC TC=-400/+800 | 01121 | CB1041 |
| A3R54 | 2100-3273 | 1 | | RESISTOR-TRMR 2K 10% C SIDE-ADJ 1-TRN | 28480 | 2100-3273 |
| A3R55 | 0684-1041 | 1 | | RESISTOR 100K 10% .25W FC TC=-400/+800 | 01121 | CB1041 |
| A3R56 | 0684-4731 | 2 | | RESISTOR 47K 10% .25W FC TC=-400/+800 | 01121 | CB4731 |
| A3R57 | 0684-1041 | 1 | | RESISTOR 100K 10% .25W FC TC=-400/+800 | 01121 | CB1041 |
| A3R58 | 0684-1041 | 1 | | RESISTOR 100K 10% .25W FC TC=-400/+800 | 01121 | CB1041 |
| A3R59 | 0684-1041 | 1 | | RESISTOR 100K 10% .25W FC TC=-400/+800 | 01121 | CB1041 |
| A3R61 | 0684-4731 | 2 | | RESISTOR 47K 10% .25W FC TC=-400/+800 | 01121 | CB4731 |
| A3R62 | 0684-4741 | 4 | | RESISTOR 470K 10% .25W FC TC=-800/+900 | 01121 | CB4741 |
| A3R63 | 0684-4731 | 2 | | RESISTOR 47K 10% .25W FC TC=-400/+800 | 01121 | CB4731 |
| A3R64 | 0684-1041 | 1 | | RESISTOR 100K 10% .25W FC TC=-400/+800 | 01121 | CB1041 |
| A3R65 | 0684-1041 | 1 | | RESISTOR 100K 10% .25W FC TC=-400/+800 | 01121 | CB1041 |
| A3R66 | 0698-5922 | 4 | 1 | RESISTOR 1.8M 1% .5W F TC=0+-100 | 28480 | 0698-5922 |
| A3R67 | 0698-3572 | 6 | 1 | RESISTOR 60.4K 1% .125W F TC=0+-100 | 24546 | C4-1/8-T0-6042-F |
| A3R68 | 0698-3499 | 6 | 5 | RESISTOR 40.2K 1% .125W F TC=0+-100 | 24546 | C4-1/8-T0-4022-F |
| A3R69 | 0757-0449 | 6 | | RESISTOR 20K 1% .125W F TC=0+-100 | 24546 | C4-1/8-T0-2002-F |
| A3R71 | 0757-0449 | 6 | | RESISTOR 20K 1% .125W F TC=0+-100 | 24546 | C4-1/8-T0-2002-F |
| A3R72 | 0757-0426 | 9 | | RESISTOR 1.3K 1% .125W F TC=0+-100 | 24546 | C4-1/8-T0-1301-F |
| A3R73 | 0757-0272 | 3 | | RESISTOR 52.3K 1% .125W F TC=0+-100 | 24546 | C4-1/8-T0-5232-F |
| A3R74 | 0757-0449 | 6 | | RESISTOR 20K 1% .125W F TC=0+-100 | 24546 | C4-1/8-T0-2002-F |
| A3R75 | 0684-1041 | 1 | | RESISTOR 100K 10% .25W FC TC=-400/+800 | 01121 | CB1041 |
| A3R76 | 2100-3357 | 2 | | RESISTOR-TRMR 500K 10% C SIDE-ADJ 1-TRN | 28480 | 2100-3357 |
| A3R77 | 0698-0077 | 0 | 5 | RESISTOR 93.1K 1% .125W F TC=0+-100 | 03888 | PME55-1/8-T0-9312-F |
| A3R78 | 0698-0077 | 0 | | RESISTOR 93.1K 1% .125W F TC=0+-100 | 03888 | PME55-1/8-T0-9312-F |
| A3R79 | 0757-0277 | 8 | 1 | RESISTOR 49.9 1% .125W F TC=0+-100 | 24546 | C4-1/8-T0-49R9-F |
| A3R81 | 0757-0475 | 8 | 1 | RESISTOR 274K 1% .125W F TC=0+-100 | 24546 | C4-1/8-T0-2743-F |
| A3R82 | 0757-0346 | 2 | 2 | RESISTOR 10 1% .125W F TC=0+-100 | 24546 | C4-1/8-T0-10R0-F |
| A3R83 | 0698-4497 | 6 | 1 | RESISTOR 48.7K 1% .125W F TC=0+-100 | 24546 | C4-1/8-T0-4872-F |
| A3R84 | 0684-2231 | 3 | | RESISTOR 22K 10% .25W FC TC=-400/+800 | 01121 | CB2231 |
| A3R85 | 0684-1041 | 1 | | RESISTOR 100K 10% .25W FC TC=-400/+800 | 01121 | CB1041 |
| A3R86 | 0684-1031 | 9 | | RESISTOR 10K 10% .25W FC TC=-400/+700 | 01121 | CB1031 |
| A3R87 | 0698-0077 | 0 | | RESISTOR 93.1K 1% .125W F TC=0+-100 | 03888 | PME55-1/8-T0-9312-F |
| A3R89 | 0684-2231 | 3 | | RESISTOR 22K 10% .25W FC TC=-400/+800 | 01121 | CB2231 |
| A3R91 | 0684-4731 | 2 | | RESISTOR 47K 10% .25W FC TC=-400/+800 | 01121 | CB4731 |
| A3R92 | 0684-1041 | 1 | | RESISTOR 100K 10% .25W FC TC=-400/+800 | 01121 | CB1041 |
| A3R93 | 0684-3331 | 6 | | RESISTOR 33K 10% .25W FC TC=-400/+800 | 01121 | CB3331 |
| A3R94 | 0684-1041 | 1 | | RESISTOR 100K 10% .25W FC TC=-400/+800 | 01121 | CB1041 |
| A3R95 | 0698-3279 | 0 | 6 | RESISTOR 4.99K 1% .125W F TC=0+-100 | 24546 | C4-1/8-T0-4991-F |
| A3R96 | 0684-1041 | 1 | | RESISTOR 100K 10% .25W FC TC=-400/+800 | 01121 | CB1041 |
| A3R97 | 0684-1041 | 1 | | RESISTOR 100K 10% .25W FC TC=-400/+800 | 01121 | CB1041 |
| A3R98 | 0757-0442 | 9 | | RESISTOR 10K 1% .125W F TC=0+-100 | 24546 | C4-1/8-T0-1002-F |
| A3R99 | 0684-2231 | 3 | | RESISTOR 22K 10% .25W FC TC=-400/+800 | 01121 | CB2231 |
| A3R101 | 0684-2231 | 3 | | RESISTOR 22K 10% .25W FC TC=-400/+800 | 01121 | CB2231 |
| A3R102 | 0684-1041 | 1 | | RESISTOR 100K 10% .25W FC TC=-400/+800 | 01121 | CB1041 |
| A3R103 | 0684-1041 | 1 | | RESISTOR 100K 10% .25W FC TC=-400/+800 | 01121 | CB1041 |
| A3R104 | 0684-2231 | 3 | | RESISTOR 22K 10% .25W FC TC=-400/+800 | 01121 | CB2231 |
| A3R105 | 0684-5641 | 5 | | RESISTOR 560K 10% .25W FC TC=-800/+900 | 01121 | CB5641 |
| A3R106 | 0684-1041 | 1 | | RESISTOR 100K 10% .25W FC TC=-400/+800 | 01121 | CB1041 |
| A3R107 | 0684-1041 | 1 | | RESISTOR 100K 10% .25W FC TC=-400/+800 | 01121 | CB1041 |
| A3R108 | 0684-1041 | 1 | | RESISTOR 100K 10% .25W FC TC=-400/+800 | 01121 | CB1041 |
| A3R109 | 0684-1041 | 1 | | RESISTOR 100K 10% .25W FC TC=-400/+800 | 01121 | CB1041 |
| A3R110 | 0698-3279 | 0 | | RESISTOR 4.99K 1% .125W F TC=0+-100 | 24546 | C4-1/8-T0-4991-F |
| A3R112 | 0684-1041 | 1 | | RESISTOR 100K 10% .25W FC TC=-400/+800 | 01121 | CB1041 |
| A3S1 | 3101-1312 | 8 | 1 | SWITCH-SLIDE SPDT MS | 28480 | 3101-1312 |
| A3U1 | 1826-0043 | 4 | | IC OP AMP GP TO-99 | 01928 | CA307T |
| A3U2 | 1820-0223 | 0 | 4 | IC OP AMP GP TO-99 | 04713 | MLM301AG |
| A3U3 | 1826-0043 | 4 | | IC OP AMP GP TO-99 | 01928 | CA307T |
| A3U4 | 1820-0223 | 0 | | IC OP AMP GP TO-99 | 04713 | MLM301AG |
| A3U5 | 1820-1418 | 7 | 1 | IC DCDR TTL LS BCD-TO-DEC 4-TO-10-LINE | 01295 | SN74LS42N |
| A3U6 | 1820-1574 | 6 | 1 | IC FF TTL LS J-K PULSE CLEAR DUAL | 01295 | SN74LS73AN |
| A3U7 | 1820-0594 | 8 | 1 | IC FF TTL L J-K M/S PULSE PRESET/CLEAR | 27014 | DM74L72N |
| A3U8 | 1820-1197 | 9 | 1 | IC GATE TTL LS NAND QUAD 2-INP | 01295 | SN74LS00N |
| A3U9 | 1820-1204 | 9 | 3 | IC GATE TTL LS NAND DUAL 4-INP | 01295 | SN74LS20N |
| A3U11 | 1820-1144 | 6 | 1 | IC GATE TTL LS NOR QUAD 2-INP | 01295 | SN74LS02N |
| A3U12 | 1820-1202 | 7 | | IC GATE TTL LS NAND TPL 3-INP | 01295 | SN74LS10N |
| A3U13 | 1820-1204 | 9 | | IC GATE TTL LS NAND DUAL 4-INP | 01295 | SN74LS20N |
| A3U14 | 1820-1204 | 9 | | IC GATE TTL LS NAND DUAL 4-INP | 01295 | SN74LS20N |
| A3U15 | 1826-0043 | 4 | | IC OP AMP GP TO-99 | 01928 | CA307T |
| A4 | 03586-66504 | 0 | 1 | BOARD ASSEMBLY-DETECTOR | 28480 | 03586-66504 |
| A4C1 | 0180-0210 | 6 | | CAPACITOR-FXD 3.3UF+-20% 15VDC TA | 56289 | 150D335X0015A2 |
| A4C2 | 0180-0210 | 6 | | CAPACITOR-FXD 3.3UF+-20% 15VDC TA | 56289 | 150D335X0015A2 |
| A4C3 | 0150-0093 | 0 | | CAPACITOR-FXD .01UF +80-20% 100VDC CER | 28480 | 0150-0093 |
| A4C4 | 0150-0093 | 0 | | CAPACITOR-FXD .01UF +80-20% 100VDC CER | 28480 | 0150-0093 |
| A4C5 | 0150-0093 | 0 | | CAPACITOR-FXD .01UF +80-20% 100VDC CER | 28480 | 0150-0093 |

See introduction to this section for ordering information
*Indicates factory selected value

Replaceable Parts

## Table 6-3. Replaceable Parts (Cont'd).

| Reference Designation | HP Part Number | C D | Qty | Description | Mfr Code | Mfr Part Number |
|---|---|---|---|---|---|---|
| A4C6 | 0150-0093 | 0 | | CAPACITOR-FXD .01UF +80-20% 100VDC CER | 28480 | 0150-0093 |
| A4C7 | 0150-0093 | 0 | | CAPACITOR-FXD .01UF +80-20% 100VDC CER | 28480 | 0150-0093 |
| A4C8 | 0150-0093 | 0 | | CAPACITOR-FXD .01UF +80-20% 100VDC CER | 28480 | 0150-0093 |
| A4C9 | 0180-1735 | 2 | 1 | CAPACITOR-FXD .22UF+-10% 35VDC TA | 56289 | 150D224X9035A2 |
| A4C11 | 0160-0363 | 8 | 3 | CAPACITOR-FXD 620PF +-5% 300VDC MICA | 28480 | 0160-0363 |
| A4C12 | 0150-0093 | 0 | | CAPACITOR-FXD .01UF +80-20% 100VDC CER | 28480 | 0150-0093 |
| A4C13 | 0140-0159 | 8 | 1 | CAPACITOR-FXD 3000PF +-2% 300VDC MICA | 72136 | DM19F302G0300MV1CR |
| A4C14 | 0150-0093 | 0 | | CAPACITOR-FXD .01UF +80-20% 100VDC CER | 28480 | 0150-0093 |
| A4C15 | 0180-0197 | 8 | | CAPACITOR-FXD 2.2UF+-10% 20VDC TA | 56289 | 150D225X9020A2 |
| A4C16 | 0160-0153 | 4 | 1 | CAPACITOR-FXD 1000PF +-10% 200VDC POLYE | 28480 | 0160-0153 |
| A4C17 | 0150-0084 | 9 | | CAPACITOR-FXD .1UF +80-20% 100VDC CER | 28480 | 0150-0084 |
| A4C18 | 0160-0763 | 2 | 11 | CAPACITOR-FXD 5PF +-10% 500VDC MICA | 28480 | 0160-0763 |
| A4C19 | 0160-2204 | 0 | 8 | CAPACITOR-FXD 100PF +-5% 300VDC MICA | 28480 | 0160-2204 |
| A4C21 | 0150-0084 | 9 | | CAPACITOR-FXD .1UF +80-20% 100VDC CER | 28480 | 0150-0084 |
| A4C22 | 0150-0084 | 9 | | CAPACITOR-FXD .1UF +80-20% 100VDC CER | 28480 | 0150-0084 |
| A4C23 | 0160-0763 | 2 | | CAPACITOR-FXD 5PF +-10% 500VDC MICA | 28480 | 0160-0763 |
| A4C24 | 0160-2204 | 0 | | CAPACITOR-FXD 100PF +-5% 300VDC MICA | 28480 | 0160-2204 |
| A4C25 | 0150-0084 | 9 | | CAPACITOR-FXD .1UF +80-20% 100VDC CER | 28480 | 0150-0084 |
| A4C26 | 0150-0084 | 9 | | CAPACITOR-FXD .1UF +80-20% 100VDC CER | 28480 | 0150-0084 |
| A4C27 | 0160-0763 | 2 | | CAPACITOR-FXD 5PF +-10% 500VDC MICA | 28480 | 0160-0763 |
| A4C28 | 0160-2204 | 0 | | CAPACITOR-FXD 100PF +-5% 300VDC MICA | 28480 | 0160-2204 |
| A4C29 | 0150-0084 | 9 | | CAPACITOR-FXD .1UF +80-20% 100VDC CER | 28480 | 0150-0084 |
| A4C31 | 0150-0084 | 9 | | CAPACITOR-FXD .1UF +80-20% 100VDC CER | 28480 | 0150-0084 |
| A4C32 | 0160-0763 | 2 | | CAPACITOR-FXD 5PF +-10% 500VDC MICA | 28480 | 0160-0763 |
| A4C33 | 0160-2204 | 0 | | CAPACITOR-FXD 100PF +-5% 300VDC MICA | 28480 | 0160-2204 |
| A4C34 | 0160-3094 | 8 | 1 | CAPACITOR-FXD .1UF +-10% 100VDC CER | 28480 | 0160-3094 |
| A4C35 | 0180-0210 | 6 | | CAPACITOR-FXD 3.3UF+-20% 15VDC TA | 56289 | 150D335X0015A2 |
| A4C36 | 0160-2960 | 5 | | CAPACITOR-FXD .05UF +-20% 100VDC CER | 28480 | 0160-2960 |
| A4C37 | 0180-0106 | 9 | | CAPACITOR-FXD 60UF+-20% 6VDC TA | 56289 | 150D606X0006B2 |
| A4C38 | 0180-0197 | 8 | | CAPACITOR-FXD 2.2UF+-10% 20VDC TA | 56289 | 150D225X9020A2 |
| A4C39 | 0160-2605 | 5 | | CAPACITOR-FXD .02UF +80-20% 25VDC CER | 28480 | 0160-2605 |
| A4C41 | 0160-2605 | 5 | | CAPACITOR-FXD .02UF +80-20% 25VDC CER | 28480 | 0160-2605 |
| A4C42 | 0150-0093 | 0 | | CAPACITOR-FXD .01UF +80-20% 100VDC CER | 28480 | 0150-0093 |
| A4C43 | 0160-2204 | 0 | | CAPACITOR-FXD 100PF +-5% 300VDC MICA | 28480 | 0160-2204 |
| A4C44 | 0150-0022 | 5 | | CAPACITOR-FXD 3.3PF +-10% 500VDC TI DIOX | 28480 | 0150-0022 |
| A4C45 | 0150-0093 | 0 | | CAPACITOR-FXD .01UF +80-20% 100VDC CER | 28480 | 0150-0093 |
| A4C46 | 0150-0093 | 0 | | CAPACITOR-FXD .01UF +80-20% 100VDC CER | 28480 | 0150-0093 |
| A4C47 | 0150-0093 | 0 | | CAPACITOR-FXD .01UF +80-20% 100VDC CER | 28480 | 0150-0093 |
| A4C48 | 0150-0093 | 0 | | CAPACITOR-FXD .01UF +80-20% 100VDC CER | 28480 | 0150-0093 |
| A4C49 | 0180-0291 | 3 | 16 | CAPACITOR-FXD 1UF+-10% 35VDC TA | 56289 | 150D105X9035A2 |
| A4C51 | 0180-0291 | 3 | | CAPACITOR-FXD 1UF+-10% 35VDC TA | 56289 | 150D105X9035A2 |
| A4C52 | 0180-0210 | 6 | | CAPACITOR-FXD 3.3UF+-20% 15VDC TA | 56289 | 150D335X0015A2 |
| A4C53 | 0160-2605 | 5 | | CAPACITOR-FXD .02UF +80-20% 25VDC CER | 28480 | 0160-2605 |
| A4C54 | 0160-2204 | 0 | | CAPACITOR-FXD 100PF +-5% 300VDC MICA | 28480 | 0160-2204 |
| A4C55 | 0150-0022 | 5 | | CAPACITOR-FXD 3.3PF +-10% 500VDC TI DIOX | 28480 | 0150-0022 |
| A4C56 | 0180-1743 | 2 | | CAPACITOR-FXD .1UF+-10% 35VDC TA | 56289 | 150D104X9035A2 |
| A4C57 | 0150-0093 | 0 | | CAPACITOR-FXD .01UF +80-20% 100VDC CER | 28480 | 0150-0093 |
| A4C58 | 0150-0093 | 0 | | CAPACITOR-FXD .01UF +80-20% 100VDC CER | 28480 | 0150-0093 |
| A4C59 | 0160-2605 | 5 | | CAPACITOR-FXD .02UF +80-20% 25VDC CER | 28480 | 0160-2605 |
| A4C61 | 0160-2605 | 5 | | CAPACITOR-FXD .02UF +80-20% 25VDC CER | 28480 | 0160-2605 |
| A4C62 | 0160-2960 | 5 | | CAPACITOR-FXD .05UF +-20% 100VDC CER | 28480 | 0160-2960 |
| A4C63 | 0160-0763 | 2 | | CAPACITOR-FXD 5PF +-10% 500VDC MICA | 28480 | 0160-0763 |
| A4C64 | 0150-0084 | 9 | | CAPACITOR-FXD .1UF +80-20% 100VDC CER | 28480 | 0150-0084 |
| A4C65 | 0160-2960 | 5 | | CAPACITOR-FXD .05UF +-20% 100VDC CER | 28480 | 0160-2960 |
| A4C66 | 0160-0154 | 5 | | CAPACITOR-FXD 2200PF +-10% 200VDC POLYE | 28480 | 0160-0154 |
| A4C67 | 0160-0154 | 5 | | CAPACITOR-FXD 2200PF +-10% 200VDC POLYE | 28480 | 0160-0154 |
| A4C68 | 0160-0157 | 8 | 1 | CAPACITOR-FXD 4700PF +-10% 200VDC POLYE | 28480 | 0160-0157 |
| A4C69 | 0140-0198 | 5 | 1 | CAPACITOR-FXD 200PF +-5% 300VDC MICA | 72136 | DM15F201J0300MV1CR |
| A4C70 | 0160-2960 | 5 | | CAPACITOR-FXD .05UF +-20% 100VDC CER | 28480 | 0160-2960 |
| A4C71 | 0180-0197 | 8 | | CAPACITOR-FXD 2.2UF+-10% 20VDC TA | 56289 | 150D225X9020A2 |
| A4C72 | 0180-1746 | 5 | 15 | CAPACITOR-FXD 15UF+-10% 20VDC TA | 56289 | 150D156X9020B2 |
| A4C73 | 0180-1746 | 5 | | CAPACITOR-FXD 15UF+-10% 20VDC TA | 56289 | 150D156X9020B2 |
| A4C74 | 0180-0197 | 8 | | CAPACITOR-FXD 2.2UF+-10% 20VDC TA | 56289 | 150D225X9020A2 |
| A4C75 | 0180-0228 | 6 | | CAPACITOR-FXD 22UF+-10% 15VDC TA | 56289 | 150D226X9015B2 |
| A4C76 | 0180-0197 | 8 | | CAPACITOR-FXD 2.2UF+-10% 20VDC TA | 56289 | 150D225X9020A2 |
| A4C77 | 0180-1746 | 5 | | CAPACITOR-FXD 15UF+-10% 20VDC TA | 56289 | 150D156X9020B2 |
| A4C78 | 0180-1746 | 5 | | CAPACITOR-FXD 15UF+-10% 20VDC TA | 56289 | 150D156X9020B2 |
| A4C79 | 0180-1746 | 5 | | CAPACITOR-FXD 15UF+-10% 20VDC TA | 56289 | 150D156X9020B2 |
| A4C81 | 0180-0197 | 8 | | CAPACITOR-FXD 2.2UF+-10% 20VDC TA | 56289 | 150D225X9020A2 |
| A4C82 | 0180-0228 | 6 | | CAPACITOR-FXD 22UF+-10% 15VDC TA | 56289 | 150D226X9015B2 |
| A4CR1 | 1901-0040 | 1 | | DIODE-SWITCHING 30V 50MA 2NS DO-35 | 28480 | 1901-0040 |
| A4CR2 | 1901-0040 | 1 | | DIODE-SWITCHING 30V 50MA 2NS DO-35 | 28480 | 1901-0040 |
| A4CR3 | 1901-0040 | 1 | | DIODE-SWITCHING 30V 50MA 2NS DO-35 | 28480 | 1901-0040 |
| A4CR4 | 1901-0040 | 1 | | DIODE-SWITCHING 30V 50MA 2NS DO-35 | 28480 | 1901-0040 |
| A4CR5 | 1901-0040 | 1 | | DIODE-SWITCHING 30V 50MA 2NS DO-35 | 28480 | 1901-0040 |

See introduction to this section for ordering information
*Indicates factory selected value

Replaceable Parts

## Table 6-3. Replaceable Parts (Cont'd).

| Reference Designation | HP Part Number | C D | Qty | Description | Mfr Code | Mfr Part Number |
|---|---|---|---|---|---|---|
| A4CR6 | 1901-0040 | 1 | | DIODE-SWITCHING 30V 50MA 2NS DO-35 | 28480 | 1901-0040 |
| A4CR7 | 1901-0040 | 1 | | DIODE-SWITCHING 30V 50MA 2NS DO-35 | 28480 | 1901-0040 |
| A4CR8 | 1901-0040 | 1 | | DIODE-SWITCHING 30V 50MA 2NS DO-35 | 28480 | 1901-0040 |
| A4CR9 | 1901-0040 | 1 | | DIODE-SWITCHING 30V 50MA 2NS DO-35 | 28480 | 1901-0040 |
| A4CR11 | 1901-0040 | 1 | | DIODE-SWITCHING 30V 50MA 2NS DO-35 | 28480 | 1901-0040 |
| A4CR12 | 1901-0040 | 1 | | DIODE-SWITCHING 30V 50MA 2NS DO-35 | 28480 | 1901-0040 |
| A4CR13 | 1901-0179 | 7 | 8 | DIODE-SWITCHING 15V 50MA 750PS DO-7 | 28480 | 1901-0179 |
| A4CR14 | 1901-0179 | 7 | | DIODE-SWITCHING 15V 50MA 750PS DO-7 | 28480 | 1901-0179 |
| A4CR15 | 1901-0179 | 7 | | DIODE-SWITCHING 15V 50MA 750PS DO-7 | 28480 | 1901-0179 |
| A4CR16 | 1901-0179 | 7 | | DIODE-SWITCHING 15V 50MA 750PS DO-7 | 28480 | 1901-0179 |
| A4CR17 | 1901-0179 | 7 | | DIODE-SWITCHING 15V 50MA 750PS DO-7 | 28480 | 1901-0179 |
| A4CR18 | 1901-0179 | 7 | | DIODE-SWITCHING 15V 50MA 750PS DO-7 | 28480 | 1901-0179 |
| A4CR19 | 1901-0179 | 7 | | DIODE-SWITCHING 15V 50MA 750PS DO-7 | 28480 | 1901-0179 |
| A4CR21 | 1901-0179 | 7 | | DIODE-SWITCHING 15V 50MA 750PS DO-7 | 28480 | 1901-0179 |
| A4CR22 | 1901-0040 | 1 | | DIODE-SWITCHING 30V 50MA 2NS DO-35 | 28480 | 1901-0040 |
| A4CR23 | 1901-0040 | 1 | | DIODE-SWITCHING 30V 50MA 2NS DO-35 | 28480 | 1901-0040 |
| A4CR24 | 1901-0040 | 1 | | DIODE-SWITCHING 30V 50MA 2NS DO-35 | 28480 | 1901-0040 |
| A4CR25 | 1901-0040 | 1 | | DIODE-SWITCHING 30V 50MA 2NS DO-35 | 28480 | 1901-0040 |
| A4CR26 | 1901-0040 | 1 | | DIODE-SWITCHING 30V 50MA 2NS DO-35 | 28480 | 1901-0040 |
| A4CR27 | 1901-0040 | 1 | | DIODE-SWITCHING 30V 50MA 2NS DO-35 | 28480 | 1901-0040 |
| A4CR28 | 1901-0040 | 1 | | DIODE-SWITCHING 30V 50MA 2NS DO-35 | 28480 | 1901-0040 |
| A4CR29 | 1902-3128 | 4 | | DIODE-ZNR 7.32V 5% DO-35 PD=.4W | 28480 | 1902-3128 |
| A4CR31 | 1901-0347 | 1 | 2 | DIODE-SCHOTTKY 8V | 28480 | 1901-0347 |
| A4CR32 | 1901-0347 | 1 | | DIODE-SCHOTTKY 8V | 28480 | 1901-0347 |
| A4L1 | 9100-3261 | 4 | 1 | INDUCTORRF-CH-MLD 848UH 5% .8D Q=200 | 28480 | 9100-3261 |
| A4L2 | 9100-0541 | 7 | 4 | INDUCTORRF-CH-MLD 250UH 10% .25DX.5LG | 28480 | 9100-0541 |
| A4L3 | 9140-0129 | 1 | 10 | INDUCTORRF-CH-MLD 220UH 5% .166DX.385LG | 28480 | 9140-0129 |
| A4L4 | 9140-0129 | 1 | | INDUCTORRF-CH-MLD 220UH 5% .166DX.385LG | 28480 | 9140-0129 |
| A4L5 | 9140-0129 | 1 | | INDUCTORRF-CH-MLD 220UH 5% .166DX.385LG | 28480 | 9140-0129 |
| A4L6 | 9100-0541 | 7 | | INDUCTORRF-CH-MLD 250UH 10% .25DX.5LG | 28480 | 9100-0541 |
| A4L7 | 9140-0129 | 1 | | INDUCTORRF-CH-MLD 220UH 5% .166DX.385LG | 28480 | 9140-0129 |
| A4L8 | 9140-0129 | 1 | | INDUCTORRF-CH-MLD 220UH 5% .166DX.385LG | 28480 | 9140-0129 |
| A4L9 | 9140-0129 | 1 | | INDUCTORRF-CH-MLD 220UH 5% .166DX.385LG | 28480 | 9140-0129 |
| A4L11 | 9140-0129 | 1 | | INDUCTORRF-CH-MLD 220UH 5% .166DX.385LG | 28480 | 9140-0129 |
| A4Q1 | 1854-0071 | 7 | | TRANSISTOR NPN SI PD=300MW FT=200MHZ | 28480 | 1854-0071 |
| A4Q2 | 1854-0071 | 7 | | TRANSISTOR NPN SI PD=300MW FT=200MHZ | 28480 | 1854-0071 |
| A4Q3 | 1854-0071 | 7 | | TRANSISTOR NPN SI PD=300MW FT=200MHZ | 28480 | 1854-0071 |
| A4Q4 | 1853-0010 | 2 | | TRANSISTOR PNP SI TO-18 PD=360MW | 28480 | 1853-0010 |
| A4Q5 | 1854-0071 | 7 | | TRANSISTOR NPN SI PD=300MW FT=200MHZ | 28480 | 1854-0071 |
| A4Q6 | 1853-0010 | 2 | | TRANSISTOR PNP SI TO-18 PD=360MW | 28480 | 1853-0010 |
| A4Q7 | 1854-0071 | 7 | | TRANSISTOR NPN SI PD=300MW FT=200MHZ | 28480 | 1854-0071 |
| A4Q8 | 1854-0071 | 7 | | TRANSISTOR NPN SI PD=300MW FT=200MHZ | 28480 | 1854-0071 |
| A4Q9 | 1854-0071 | 7 | | TRANSISTOR NPN SI PD=300MW FT=200MHZ | 28480 | 1854-0071 |
| A4Q11 | 1854-0071 | 7 | | TRANSISTOR NPN SI PD=300MW FT=200MHZ | 28480 | 1854-0071 |
| A4Q12 | 1854-0071 | 7 | | TRANSISTOR NPN SI PD=300MW FT=200MHZ | 28480 | 1854-0071 |
| A4Q13 | 1854-0071 | 7 | | TRANSISTOR NPN SI PD=300MW FT=200MHZ | 28480 | 1854-0071 |
| A4Q14 | 1854-0071 | 7 | | TRANSISTOR NPN SI PD=300MW FT=200MHZ | 28480 | 1854-0071 |
| A4Q15 | 1854-0071 | 7 | | TRANSISTOR NPN SI PD=300MW FT=200MHZ | 28480 | 1854-0071 |
| A4Q16 | 1853-0010 | 2 | | TRANSISTOR PNP SI TO-18 PD=360MW | 28480 | 1853-0010 |
| A4R1 | 2100-3350 | 5 | 1 | RESISTOR-TRMR 200 10% C SIDE-ADJ 1-TRN | 28480 | 2100-3350 |
| A4R2 | 2100-3349 | 2 | 1 | RESISTOR-TRMR 100 10% C SIDE-ADJ 1-TRN | 28480 | 2100-3349 |
| A4R3 | 2100-3352 | 7 | | RESISTOR-TRMR 1K 10% C SIDE-ADJ 1-TRN | 28480 | 2100-3352 |
| A4R4 | 2100-3352 | 7 | | RESISTOR-TRMR 1K 10% C SIDE-ADJ 1-TRN | 28480 | 2100-3352 |
| A4R5 | 2100-3353 | 8 | 2 | RESISTOR-TRMR 20K 10% C SIDE-ADJ 1-TRN | 32997 | 3386X-Y46-203 |
| A4R6 | 2100-3351 | 6 | 1 | RESISTOR-TRMR 500 10% C SIDE-ADJ 1-TRN | 28480 | 2100-3351 |
| A4R7 | 2100-3273 | 1 | | RESISTOR-TRMR 2K 10% C SIDE-ADJ 1-TRN | 28480 | 2100-3273 |
| A4R8 | 2100-3273 | 1 | | RESISTOR-TRMR 2K 10% C SIDE-ADJ 1-TRN | 28480 | 2100-3273 |
| A4R9 | 2100-3354 | 9 | 3 | RESISTOR-TRMR 50K 10% C SIDE-ADJ 1-TRN | 28480 | 2100-3354 |
| A4R10 | 2100-3354 | 9 | | RESISTOR-TRMR 50K 10% C SIDE-ADJ 1-TRN | 28480 | 2100-3354 |
| A4R11 | 2100-3273 | 1 | | RESISTOR-TRMR 2K 10% C SIDE-ADJ 1-TRN | 28480 | 2100-3273 |
| A4R12 | 0757-0449 | 6 | | RESISTOR 20K 1% .125W F TC=0+-100 | 24546 | C4-1/8-T0-2002-F |
| A4R13 | 0757-0449 | 6 | | RESISTOR 20K 1% .125W F TC=0+-100 | 24546 | C4-1/8-T0-2002-F |
| A4R14 | 0757-0274 | 5 | 1 | RESISTOR 1.21K 1% .125W F TC=0+-100 | 24546 | C4-1/8-T0-1213-F |
| A4R15 | 0757-0438 | 3 | | RESISTOR 5.11K 1% .125W F TC=0+-100 | 24546 | C4-1/8-T0-5111-F |
| A4R16 | 0698-3449 | 6 | | RESISTOR 28.7K 1% .125W F TC=0+-100 | 24546 | C4-1/8-T0-2872-F |
| A4R17 | 0698-4436 | 3 | 1 | RESISTOR 2.8K 1% .125W F TC=0+-100 | 24546 | C4-1/8-T0-2801-F |
| A4R18* | 0757-0282 | 5 | 3 | RESISTOR 221 1% .125W F TC=0+-100 | 24546 | C4-1/8-T0-221R-F |
| A4R19 | 0684-1031 | 9 | | RESISTOR 10K 10% .25W FC TC=-400/+700 | 01121 | CB1031 |
| A4R20 | 0684-1031 | 9 | | RESISTOR 10K 10% .25W FC TC=-400/+700 | 01121 | CB1031 |
| A4R21* | 0698-3443 | 0 | 1 | RESISTOR 287 1% .125W F TC=0+-100 | 24546 | C4-1/8-T0-287R-F |
| A4R22 | 0757-0280 | 3 | | RESISTOR 1K 1% .125W F TC=0+-100 | 24546 | C4-1/8-T0-1001-F |
| A4R23 | 0757-0469 | 0 | 4 | RESISTOR 150K 1% .125W F TC=0+-100 | 24546 | C4-1/8-T0-1503-F |
| A4R24 | 0757-0469 | 0 | | RESISTOR 150K 1% .125W F TC=0+-100 | 24546 | C4-1/8-T0-1503-F |
| A4R25 | 0757-0280 | 3 | | RESISTOR 1K 1% .125W F TC=0+-100 | 24546 | C4-1/8-T0-1001-F |

See introduction to this section for ordering information
*Indicates factory selected value

Replaceable Parts

## Table 6-3. Replaceable Parts (Cont'd).

| Reference Designation | HP Part Number | C D | Qty | Description | Mfr Code | Mfr Part Number |
|---|---|---|---|---|---|---|
| A4R26 | 0757-0449 | 6 | | RESISTOR 20K 1% .125W F TC=0+-100 | 24546 | C4-1/8-T0-2002-F |
| A4R27 | 0757-0449 | 6 | | RESISTOR 20K 1% .125W F TC=0+-100 | 24546 | C4-1/8-T0-2002-F |
| A4R28 | 0684-3331 | 6 | | RESISTOR 33K 10% .25W FC TC=-400/+800 | 01121 | CB3331 |
| A4R29 | 0684-1031 | 9 | | RESISTOR 10K 10% .25W FC TC=-400/+700 | 01121 | CB1031 |
| A4R31 | 0684-1031 | 9 | | RESISTOR 10K 10% .25W FC TC=-400/+700 | 01121 | CB1031 |
| A4R32 | 0684-3331 | 6 | | RESISTOR 33K 10% .25W FC TC=-400/+800 | 01121 | CB3331 |
| A4R33 | 0684-1031 | 9 | | RESISTOR 10K 10% .25W FC TC=-400/+700 | 01121 | CB1031 |
| A4R34 | 0684-1031 | 9 | | RESISTOR 10K 10% .25W FC TC=-400/+700 | 01121 | CB1031 |
| A4R35 | 0684-3331 | 6 | | RESISTOR 33K 10% .25W FC TC=-400/+800 | 01121 | CB3331 |
| A4R36 | 0684-3331 | 6 | | RESISTOR 33K 10% .25W FC TC=-400/+800 | 01121 | CB3331 |
| A4R37 | 0684-1831 | 7 | 5 | RESISTOR 18K 10% .25W FC TC=-400/+800 | 01121 | CB1831 |
| A4R38 | 0684-1531 | 4 | | RESISTOR 15K 10% .25W FC TC=-400/+800 | 01121 | CB1531 |
| A4R39 | 0757-0426 | 9 | | RESISTOR 1.3K 1% .125W F TC=0+-100 | 24546 | C4-1/8-T0-1301-F |
| A4R41 | 0757-0394 | 0 | 4 | RESISTOR 51.1 1% .125W F TC=0+-100 | 24546 | C4-1/8-T0-51R1-F |
| A4R42 | 0757-0401 | 0 | | RESISTOR 100 1% .125W F TC=0+-100 | 24546 | C4-1/8-T0-101-F |
| A4R43 | 0698-3488 | 3 | | RESISTOR 442 1% .125W F TC=0+-100 | 24546 | C4-1/8-T0-442R-F |
| A4R44 | 0757-0401 | 0 | | RESISTOR 100 1% .125W F TC=0+-100 | 24546 | C4-1/8-T0-101-F |
| A4R45 | 0757-0401 | 0 | | RESISTOR 100 1% .125W F TC=0+-100 | 24546 | C4-1/8-T0-101-F |
| A4R46 | 0698-4483 | 0 | 5 | RESISTOR 18.7K 1% .125W F TC=0+-100 | 24546 | C4-1/8-T0-1872-F |
| A4R47 | 0757-0465 | 6 | 11 | RESISTOR 100K 1% .125W F TC=0+-100 | 24546 | C4-1/8-T0-1003-F |
| A4R48 | 0698-4483 | 0 | | RESISTOR 18.7K 1% .125W F TC=0+-100 | 24546 | C4-1/8-T0-1872-F |
| A4R49 | 0684-5641 | 5 | | RESISTOR 560K 10% .25W FC TC=-800/+900 | 01121 | CB5641 |
| A4R51 | 0684-1531 | 4 | | RESISTOR 15K 10% .25W FC TC=-400/+800 | 01121 | CB1531 |
| A4R52 | 0683-2225 | 3 | 3 | RESISTOR 2.2K 5% .25W FC TC=-400/+700 | 01121 | CB2225 |
| A4R53 | 0684-1031 | 9 | | RESISTOR 10K 10% .25W FC TC=-400/+700 | 01121 | CB1031 |
| A4R54 | 0684-4731 | 2 | | RESISTOR 47K 10% .25W FC TC=-400/+800 | 01121 | CB4731 |
| A4R55 | 0684-1031 | 9 | | RESISTOR 10K 10% .25W FC TC=-400/+700 | 01121 | CB1031 |
| A4R56 | 0698-4434 | 1 | 1 | RESISTOR 2.32K 1% .125W F TC=0+-100 | 24546 | C4-1/8-T0-2321-F |
| A4R57 | 0757-0346 | 2 | | RESISTOR 10 1% .125W F TC=0+-100 | 24546 | C4-1/8-T0-10R0-F |
| A4R58 | 0757-0280 | 3 | | RESISTOR 1K 1% .125W F TC=0+-100 | 24546 | C4-1/8-T0-1001-F |
| A4R59 | 0757-0273 | 4 | 5 | RESISTOR 3.01K 1% .125W F TC=0+-100 | 24546 | C4-1/8-T0-3011-F |
| A4R62* | 0698-4488 | 5 | 4 | RESISTOR 26.7K 1% .125W F TC=0+-100 | 24546 | C4-1/8-T0-2672-F |
| A4R63 | 0757-0273 | 4 | | RESISTOR 3.01K 1% .125W F TC=0+-100 | 24546 | C4-1/8-T0-3011-F |
| A4R64* | 0698-4488 | 5 | | RESISTOR 26.7K 1% .125W F TC=0+-100 | 24546 | C4-1/8-T0-2672-F |
| A4R65* | 0698-4488 | 5 | | RESISTOR 26.7K 1% .125W F TC=0+-100 | 24546 | C4-1/8-T0-2672-F |
| A4R66 | 0757-0273 | 4 | | RESISTOR 3.01K 1% .125W F TC=0+-100 | 24546 | C4-1/8-T0-3011-F |
| A4R67* | 0698-3245 | 0 | 4 | RESISTOR 20.5K 1% .125W F TC=0+-100 | 24546 | C4-1/8-T0-2052-F |
| A4R68 | 0698-3279 | 0 | | RESISTOR 4.99K 1% .125W F TC=0+-100 | 24546 | C4-1/8-T0-4991-F |
| A4R69 | 0757-0273 | 4 | | RESISTOR 3.01K 1% .125W F TC=0+-100 | 24546 | C4-1/8-T0-3011-F |
| A4R71* | 0698-4482 | 9 | 1 | RESISTOR 17.4K 1% .125W F TC=0+-100 | 03888 | PME55-1/8-T0-1742-F |
| A4R72 | 0698-3558 | 8 | | RESISTOR 4.02K 1% .125W F TC=0+-100 | 24546 | C4-1/8-T0-4021-F |
| A4R73 | 0698-3497 | 4 | | RESISTOR 6.04K 1% .125W F TC=0+-100 | 24546 | C4-1/8-T0-6044-F |
| A4R74 | 0757-0430 | 5 | | RESISTOR 2.21K 1% .125W F TC=0+-100 | 24546 | C4-1/8-T0-2211-F |
| A4R75 | 0698-3228 | 9 | | RESISTOR 49.9K 1% .125W F TC=0+-100 | 28480 | 0698-3228 |
| A4R76 | 0698-3516 | 8 | 6 | RESISTOR 6.34K 1% .125W F TC=0+-100 | 24546 | C4-1/8-T0-6341-F |
| A4R77 | 0757-0434 | 9 | 2 | RESISTOR 3.65K 1% .125W F TC=0+-100 | 24546 | C4-1/8-T0-3651-F |
| A4R78 | 0757-0449 | 6 | | RESISTOR 20K 1% .125W F TC=0+-100 | 24546 | C4-1/8-T0-2002-F |
| A4R79 | 0683-1515 | 2 | 2 | RESISTOR 150 5% .25W FC TC=-400/+600 | 01121 | CB1515 |
| A4R81 | 0683-1515 | 2 | | RESISTOR 150 5% .25W FC TC=-400/+600 | 01121 | CB1515 |
| A4R82 | 0757-0442 | 9 | | RESISTOR 10K 1% .125W F TC=0+-100 | 24546 | C4-1/8-T0-1002-F |
| A4R83* | 0698-4403 | 4 | 1 | RESISTOR 102 1% .125W F TC=0+-100 | 24546 | C4-1/8-T0-102R-F |
| A4R84 | 0684-3331 | 6 | | RESISTOR 33K 10% .25W FC TC=-400/+800 | 01121 | CB3331 |
| A4R85 | 0684-3331 | 6 | | RESISTOR 33K 10% .25W FC TC=-400/+800 | 01121 | CB3331 |
| A4R86 | 0757-0465 | 6 | | RESISTOR 100K 1% .125W F TC=0+-100 | 24546 | C4-1/8-T0-1003-F |
| A4R87 | 0757-0427 | 0 | | RESISTOR 1.5K 1% .125W F TC=0+-100 | 24546 | C4-1/8-T0-1501-F |
| A4R88 | 0698-3557 | 7 | 2 | RESISTOR 806 1% .125W F TC=0+-100 | 24546 | C4-1/8-T0-806R-F |
| A4R89 | 0757-0465 | 6 | | RESISTOR 100K 1% .125W F TC=0+-100 | 24546 | C4-1/8-T0-1003-F |
| A4R91 | 0757-0449 | 6 | | RESISTOR 20K 1% .125W F TC=0+-100 | 24546 | C4-1/8-T0-2002-F |
| A4R92 | 0684-3331 | 6 | | RESISTOR 33K 10% .25W FC TC=-400/+800 | 01121 | CB3331 |
| A4R93 | 0684-3331 | 6 | | RESISTOR 33K 10% .25W FC TC=-400/+800 | 01121 | CB3331 |
| A4R94 | 0684-4741 | 4 | | RESISTOR 470K 10% .25W FC TC=-800/+900 | 01121 | CB4741 |
| A4R95 | 0684-4741 | 4 | | RESISTOR 470K 10% .25W FC TC=-800/+900 | 01121 | CB4741 |
| A4R96 | 0684-1041 | 1 | | RESISTOR 100K 10% .25W FC TC=-400/+800 | 01121 | CB1041 |
| A4R97 | 0684-3331 | 6 | | RESISTOR 33K 10% .25W FC TC=-400/+800 | 01121 | CB3331 |
| A4R98 | 0757-0442 | 9 | | RESISTOR 10K 1% .125W F TC=0+-100 | 24546 | C4-1/8-T0-1002-F |
| A4R99 | 0757-0442 | 9 | | RESISTOR 10K 1% .125W F TC=0+-100 | 24546 | C4-1/8-T0-1002-F |
| A4R101 | 0757-0442 | 9 | | RESISTOR 10K 1% .125W F TC=0+-100 | 24546 | C4-1/8-T0-1002-F |
| A4R102 | 0698-4475 | 0 | 1 | RESISTOR 9.76K 1% .125W F TC=0+-100 | 03888 | PME55-1/8-T0-9761-F |
| A4R103* | 0698-4442 | 1 | 1 | RESISTOR 4.42K 1% .125W F TC=0+-100 | 24546 | C4-1/8-T0-4421-F |
| A4R104* | 0698-4466 | 9 | 1 | RESISTOR 976 1% .125W F TC=0+-100 | 24546 | C4-1/8-T0-976R-F |
| A4R105* | 0698-4419 | 2 | 1 | RESISTOR 210 1% .125W F TC=0+-100 | 24546 | C4-1/8-T0-210R-F |
| A4R106 | 0757-0401 | 0 | | RESISTOR 100 1% .125W F TC=0+-100 | 24546 | C4-1/8-T0-101-F |
| A4R107 | 0757-0465 | 6 | | RESISTOR 100K 1% .125W F TC=0+-100 | 24546 | C4-1/8-T0-1003-F |
| A4R108 | 0698-4435 | 2 | | RESISTOR 2.49K 1% .125W F TC=0+-100 | 24546 | C4-1/8-T0-2491-F |
| A4R109* | 0698-4429 | 4 | 1 | RESISTOR 1.87K 1% .125W F TC=0+-100 | 24546 | C4-1/8-T0-1871-F |

See introduction to this section for ordering information
*Indicates factory selected value

Replaceable Parts

## Table 6-3. Replaceable Parts (Cont'd).

| Reference Designation | HP Part Number | C D | Qty | Description | Mfr Code | Mfr Part Number |
|---|---|---|---|---|---|---|
| A4R111 | 0698-3279 | 0 | | RESISTOR 4.99K 1% .125W F TC=0+-100 | 24546 | C4-1/8-T0-4991-F |
| A4R112 | 0684-2241 | 5 | 1 | RESISTOR 220K 10% .25W FC TC=-800/+900 | 01121 | CB2241 |
| A4R113 | 0757-0465 | 6 | | RESISTOR 100K 1% .125W F TC=0+-100 | 24546 | C4-1/8-T0-1003-F |
| A4R114 | 0757-0446 | 3 | | RESISTOR 15K 1% .125W F TC=0+-100 | 24546 | C4-1/8-T0-1502-F |
| A4R115 | 0757-0427 | 0 | | RESISTOR 1.5K 1% .125W F TC=0+-100 | 24546 | C4-1/8-T0-1501-F |
| A4R116 | 0757-0407 | 6 | | RESISTOR 200 1% .125W F TC=0+-100 | 24546 | C4-1/8-T0-201-F |
| A4R117 | 0684-1531 | 4 | | RESISTOR 15K 10% .25W FC TC=-400/+800 | 01121 | CB1531 |
| A4R118 | 0684-1031 | 9 | | RESISTOR 10K 10% .25W FC TC=-400/+700 | 01121 | CB1031 |
| A4R119 | 0684-3341 | 8 | 1 | RESISTOR 330K 10% .25W FC TC=-800/+900 | 01121 | CB3341 |
| A4R120 | 0684-4721 | 0 | | RESISTOR 4.7K 10% .25W FC TC=-400/+700 | 01121 | CB4721 |
| A4R121 | 0698-3499 | 6 | | RESISTOR 40.2K 1% .125W F TC=0+-100 | 24546 | C4-1/8-T0-4022-F |
| A4R122A | 0698-4509 | 1 | 2 | RESISTOR 80.6K 1% .125W F TC=0+-100 | 24546 | C4-1/8-T0-8062-F |
| A4R122B | 0698-4513 | 7 | 1 | RESISTOR 97.6K 1% .125W F TC=0+-100 | 03888 | PME55-1/8-T0-9762-F |
| A4R123 | 0698-4539 | 7 | 1 | RESISTOR 402K 1% .125W F TC=0+-100 | 28480 | 0698-4539 |
| A4R124 | 0757-0442 | 9 | | RESISTOR 10K 1% .125W F TC=0+-100 | 24546 | C4-1/8-T0-1002-F |
| A4R125 | 0757-0280 | 3 | | RESISTOR 1K 1% .125W F TC=0+-100 | 24546 | C4-1/8-T0-1001-F |
| A4R126 | 0757-0449 | 6 | | RESISTOR 20K 1% .125W F TC=0+-100 | 24546 | C4-1/8-T0-2002-F |
| A4R127 | 0757-0449 | 6 | | RESISTOR 20K 1% .125W F TC=0+-100 | 24546 | C4-1/8-T0-2002-F |
| A4R128 | 0757-0280 | 3 | | RESISTOR 1K 1% .125W F TC=0+-100 | 24546 | C4-1/8-T0-1001-F |
| A4R129 | 0757-0280 | 3 | | RESISTOR 1K 1% .125W F TC=0+-100 | 24546 | C4-1/8-T0-1001-F |
| A4R130 | 0698-3499 | 6 | | RESISTOR 40.2K 1% .125W F TC=0+-100 | 24546 | C4-1/8-T0-4022-F |
| A4R131 | 0698-3499 | 6 | | RESISTOR 40.2K 1% .125W F TC=0+-100 | 24546 | C4-1/8-T0-4022-F |
| A4R132 | 0698-4473 | 8 | 4 | RESISTOR 8.06K 1% .125W F TC=0+-100 | 24546 | C4-1/8-T0-8061-F |
| A4R133 | 0757-0458 | 7 | | RESISTOR 51.1K 1% .125W F TC=0+-100 | 24546 | C4-1/8-T0-5112-F |
| A4R134 | 0698-3279 | 0 | | RESISTOR 4.99K 1% .125W F TC=0+-100 | 24546 | C4-1/8-T0-4991-F |
| A4R135 | 0757-0317 | 7 | 1 | RESISTOR 1.33K 1% .125W F TC=0+-100 | 24546 | C4-1/8-T0-1331-F |
| A4R136 | 0698-3264 | 3 | 1 | RESISTOR 11.8K 1% .125W F TC=0+-100 | 24546 | C4-1/8-T0-1182-F |
| A4R137 | 0757-0280 | 3 | | RESISTOR 1K 1% .125W F TC=0+-100 | 24546 | C4-1/8-T0-1001-F |
| A4R138 | 0757-0438 | 3 | | RESISTOR 5.11K 1% .125W F TC=0+-100 | 24546 | C4-1/8-T0-5111-F |
| A4R139 | 0757-0288 | 1 | 1 | RESISTOR 9.09K 1% .125W F TC=0+-100 | 19701 | MF4C1/8-T0-9091-F |
| A4R140 | 0698-4484 | 1 | | RESISTOR 19.1K 1% .125W F TC=0+-100 | 24546 | C4-1/8-T0-1912-F |
| A4R141 | 0757-0453 | 2 | 2 | RESISTOR 30.1K 1% .125W F TC=0+-100 | 24546 | C4-1/8-T0-3012-F |
| A4R142 | 0757-0458 | 7 | | RESISTOR 51.1K 1% .125W F TC=0+-100 | 24546 | C4-1/8-T0-5112-F |
| A4R143 | 0757-0439 | 4 | 1 | RESISTOR 6.81K 1% .125W F TC=0+-100 | 24546 | C4-1/8-T0-6811-F |
| A4R144 | 0698-3268 | 7 | 5 | RESISTOR 11.5K 1% .125W F TC=0+-100 | 24546 | C4-1/8-T0-1152-F |
| A4R145 | 0757-0438 | 3 | | RESISTOR 5.11K 1% .125W F TC=0+-100 | 24546 | C4-1/8-T0-5111-F |
| A4R146 | 0684-6831 | 7 | | RESISTOR 68K 10% .25W FC TC=-400/+800 | 01121 | CB6831 |
| A4R147 | 0684-5621 | 1 | | RESISTOR 5.6K 10% .25W FC TC=-400/+700 | 01121 | CB5621 |
| A4R148 | 0698-4307 | 7 | 1 | RESISTOR 14.3K 1% .125W F TC=0+-100 | 24546 | C4-1/8-T0-1432-F |
| A4R149 | 0757-0444 | 1 | 1 | RESISTOR 12.1K 1% .125W F TC=0+-100 | 24546 | C4-1/8-T0-1212-F |
| A4R150 | 0684-1531 | 4 | | RESISTOR 15K 10% .25W FC TC=-400/+800 | 01121 | CB1531 |
| A4RT1 | 0837-0050 | 5 | 1 | THERMISTOR DISC 1K-OHM TC=-4.4%/C-DEG | 28480 | 0837-0050 |
| A4U1 | 1826-0109 | 3 | 4 | IC OP AMP WB TO-99 | 34371 | MA2-2625-B0593 |
| A4U2 | 1826-0109 | 3 | | IC OP AMP WB TO-99 | 34371 | MA2-2625-B0593 |
| A4U3 | 1826-0109 | 3 | | IC OP AMP WB TO-99 | 34371 | MA2-2625-B0593 |
| A4U4 | 1826-0109 | 3 | | IC OP AMP WB TO-99 | 34371 | MA2-2625-B0593 |
| A4U5 | 1813-0017 | 5 | 1 | LOGIC AMPLIFIER | 28480 | 1813-0017 |
| A4U6 | 1820-0058 | 9 | | IC OP AMP GP TO-99 | 24046 | T0A 2709V |
| A4U7 | 1820-0058 | 9 | | IC OP AMP GP TO-99 | 24046 | T0A 2709V |
| A4U8 | 1826-0043 | 4 | | IC OP AMP GP TO-99 | 01928 | CA3077 |
| A4U9 | 1826-0043 | 4 | | IC OP AMP GP TO-99 | 01928 | CA3077 |
| A4U10 | 1826-0043 | 4 | | IC OP AMP GP TO-99 | 01928 | CA3077 |
| A4U11 | 1826-0043 | 4 | | IC OP AMP GP TO-99 | 01928 | CA3077 |
| A5 | 03580-66505 | 1 | 1 | BOARD ASSEMBLY-IF FILTER | 28480 | 03580-66505 |
| A5* | 03580-69515 | | | KIT:BOARD ASSY:IF FILTER | 28480 | 03580-69515 |
| A5** | 03580-69505 | | | REBUILT EXCHANGE ASSEMBLY | 28480 | 03580-69505 |
| A5C1 | 0121-0426 | 2 | | CAPACITOR-V TRMR-MICA 50-380PF 175V | 72136 | T52517-7 |
| A5C2 | 0121-0059 | 7 | 5 | CAPACITOR-V TRMR-CER 2-8PF 350V PC-MTG | 52763 | 304324 2/8PF NPO |
| A5C3 | 0121-0105 | 4 | 5 | CAPACITOR-V TRMR-CER 9-35PF 200V PC-MTG | 52763 | 304324 9/35PF N650 |
| A5C4 | 0121-0426 | 2 | | CAPACITOR-V TRMR-MICA 50-380PF 175V | 72136 | T52517-7 |
| A5C5 | 0121-0059 | 7 | | CAPACITOR-V TRMR-CER 2-8PF 350V PC-MTG | 52763 | 304324 2/8PF NPO |
| A5C6 | 0121-0105 | 4 | | CAPACITOR-V TRMR-CER 9-35PF 200V PC-MTG | 52763 | 304324 9/35PF N650 |
| A5C7 | 0121-0426 | 2 | | CAPACITOR-V TRMR-MICA 50-380PF 175V | 72136 | T52517-7 |
| A5C8 | 0121-0059 | 7 | | CAPACITOR-V TRMR-CER 2-8PF 350V PC-MTG | 52763 | 304324 2/8PF NPO |
| A5C9 | 0121-0105 | 4 | | CAPACITOR-V TRMR-CER 9-35PF 200V PC-MTG | 52763 | 304324 9/35PF N650 |
| A5C10 | 0121-0426 | 2 | | CAPACITOR-V TRMR-MICA 50-380PF 175V | 72136 | T52517-7 |
| A5C11 | 0121-0059 | 7 | | CAPACITOR-V TRMR-CER 2-8PF 350V PC-MTG | 52763 | 304324 2/8PF NPO |
| A5C12 | 0121-0105 | 4 | | CAPACITOR-V TRMR-CER 9-35PF 200V PC-MTG | 52763 | 304324 9/35PF N650 |
| A5C13 | 0121-0426 | 2 | | CAPACITOR-V TRMR-MICA 50-380PF 175V | 72136 | T52517-7 |
| A5C14 | 0121-0059 | 7 | | CAPACITOR-V TRMR-CER 2-8PF 350V PC-MTG | 52763 | 304324 2/8PF NPO |
| A5C15 | 0121-0105 | 4 | | CAPACITOR-V TRMR-CER 9-35PF 200V PC-MTG | 52763 | 304324 9/35PF N650 |
| A5C17 | 0140-0200 | 0 | | CAPACITOR-FXD 390PF +-5% 300VDC MICA | 72136 | DM15F391J0300WV1CR |
| A5C18 | 0160-0763 | 2 | | CAPACITOR-FXD 5PF +-10% 500VDC MICA | 28480 | 0160-0763 |
| A5C19 | 0140-0218 | 0 | 5 | CAPACITOR-FXD 160PF +-2% 300VDC MICA | 72136 | DM15F161G0300WV1CR |
| A5C21 | 0160-2960 | 5 | | CAPACITOR-FXD .05UF +-20% 100VDC CER | 28480 | 0160-2960 |
| A5C22 | 0160-2605 | 5 | | CAPACITOR-FXD .02UF +80-20% 25VDC CER | 28480 | 0160-2605 |

*KIT INCLUDES NEW A5 (IF FILTER) ASS'Y AND MATCHED CRYSTAL FOR REPLACING A2Y1 (SEE PARAGRAPH 7-25).
**EXCHANGE KIT INCLUDES REBUILT A5 (IF FILTER) BOARD AND MATCHED CRYSTAL FOR REPLACING A2Y1 (SEE PARAGRAPH 7-25).

See introduction to this section for ordering information
*Indicates factory selected value

Replaceable Parts

## Table 6-3. Replaceable Parts (Cont'd).

| Reference Designation | HP Part Number | C D | Qty | Description | Mfr Code | Mfr Part Number |
|---|---|---|---|---|---|---|
| A5C23 | 0180-0291 | 3 | | CAPACITOR-FXD 1UF+-10% 35VDC TA | 56289 | 150D105X9035A2 |
| A5C25 | 0150-0093 | 0 | | CAPACITOR-FXD .01UF +80-20% 100VDC CER | 28480 | 0150-0093 |
| A5C26 | 0160-2605 | 5 | | CAPACITOR-FXD .02UF +80-20% 25VDC CER | 28480 | 0160-2605 |
| A5C27 | 0160-2960 | 5 | | CAPACITOR-FXD .05UF +-20% 100VDC CER | 28480 | 0160-2960 |
| A5C28 | 0140-0200 | 0 | | CAPACITOR-FXD 390PF +-5% 300VDC MICA | 72136 | DM15F391J0300MV1CR |
| A5C29 | 0160-0763 | 2 | | CAPACITOR-FXD 5PF +-10% 500VDC MICA | 28480 | 0160-0763 |
| A5C31 | 0140-0218 | 0 | | CAPACITOR-FXD 160PF +-2% 300VDC MICA | 72136 | DM15F161G0300MV1CR |
| A5C32 | 0160-3960 | 7 | 1 | CAPACITOR-FXD 1000PF +-20% 8KVDC | 28480 | 0160-3960 |
| A5C33 | 0160-2605 | 5 | | CAPACITOR-FXD .02UF +80-20% 25VDC CER | 28480 | 0160-2605 |
| A5C34 | 0180-0291 | 3 | | CAPACITOR-FXD 1UF+-10% 35VDC TA | 56289 | 150D105X9035A2 |
| A5C36 | 0150-0093 | 0 | | CAPACITOR-FXD .01UF +80-20% 100VDC CER | 28480 | 0150-0093 |
| A5C37 | 0160-2605 | 5 | | CAPACITOR-FXD .02UF +80-20% 25VDC CER | 28480 | 0160-2605 |
| A5C38 | 0160-2960 | 5 | | CAPACITOR-FXD .05UF +-20% 100VDC CER | 28480 | 0160-2960 |
| A5C39 | 0140-0200 | 0 | | CAPACITOR-FXD 390PF +-5% 300VDC MICA | 72136 | DM15F391J0300MV1CR |
| A5C41 | 0160-0763 | 2 | | CAPACITOR-FXD 5PF +-10% 500VDC MICA | 28480 | 0160-0763 |
| A5C42 | 0140-0218 | 0 | | CAPACITOR-FXD 160PF +-2% 300VDC MICA | 72136 | DM15F161G0300MV1CR |
| A5C43 | 0160-2960 | 5 | | CAPACITOR-FXD .05UF +-20% 100VDC CER | 28480 | 0160-2960 |
| A5C44 | 0160-2605 | 5 | | CAPACITOR-FXD .02UF +80-20% 25VDC CER | 28480 | 0160-2605 |
| A5C45 | 0180-0291 | 3 | | CAPACITOR-FXD 1UF+-10% 35VDC TA | 56289 | 150D105X9035A2 |
| A5C47 | 0150-0093 | 0 | | CAPACITOR-FXD .01UF +80-20% 100VDC CER | 28480 | 0150-0093 |
| A5C48 | 0160-2605 | 5 | | CAPACITOR-FXD .02UF +80-20% 25VDC CER | 28480 | 0160-2605 |
| A5C49 | 0160-2960 | 5 | | CAPACITOR-FXD .05UF +-20% 100VDC CER | 28480 | 0160-2960 |
| A5C51 | 0140-0200 | 0 | | CAPACITOR-FXD 390PF +-5% 300VDC MICA | 72136 | DM15F391J0300MV1CR |
| A5C52 | 0160-0763 | 2 | | CAPACITOR-FXD 5PF +-10% 500VDC MICA | 28480 | 0160-0763 |
| A5C53 | 0140-0218 | 0 | | CAPACITOR-FXD 160PF +-2% 300VDC MICA | 72136 | DM15F161G0300MV1CR |
| A5C54 | 0160-2960 | 5 | | CAPACITOR-FXD .05UF +-20% 100VDC CER | 28480 | 0160-2960 |
| A5C55 | 0160-2605 | 5 | | CAPACITOR-FXD .02UF +80-20% 25VDC CER | 28480 | 0160-2605 |
| A5C56 | 0180-0291 | 3 | | CAPACITOR-FXD 1UF+-10% 35VDC TA | 56289 | 150D105X9035A2 |
| A5C58 | 0150-0093 | 0 | | CAPACITOR-FXD .01UF +80-20% 100VDC CER | 28480 | 0150-0093 |
| A5C59 | 0160-2605 | 5 | | CAPACITOR-FXD .02UF +80-20% 25VDC CER | 28480 | 0160-2605 |
| A5C61 | 0160-2960 | 5 | | CAPACITOR-FXD .05UF +-20% 100VDC CER | 28480 | 0160-2960 |
| A5C62 | 0140-0200 | 0 | | CAPACITOR-FXD 390PF +-5% 300VDC MICA | 72136 | DM15F391J0300MV1CR |
| A5C63 | 0160-0763 | 2 | | CAPACITOR-FXD 5PF +-10% 500VDC MICA | 28480 | 0160-0763 |
| A5C64 | 0140-0218 | 0 | | CAPACITOR-FXD 160PF +-2% 300VDC MICA | 72136 | DM15F161G0300MV1CR |
| A5C65 | 0160-2960 | 5 | | CAPACITOR-FXD .05UF +-20% 100VDC CER | 28480 | 0160-2960 |
| A5C66 | 0160-0195 | 4 | 1 | CAPACITOR-FXD 1000PF +-20% 250VAC(RMS) | 28480 | 0160-0195 |
| A5C67 | 0180-0291 | 3 | | CAPACITOR-FXD 1UF+-10% 35VDC TA | 56289 | 150D105X9035A2 |
| A5C68 | 0180-0291 | 3 | | CAPACITOR-FXD 1UF+-10% 35VDC TA | 56289 | 150D105X9035A2 |
| A5C69 | 0150-0093 | 0 | | CAPACITOR-FXD .01UF +80-20% 100VDC CER | 28480 | 0150-0093 |
| A5C71 | 0150-0093 | 0 | | CAPACITOR-FXD .01UF +80-20% 100VDC CER | 28480 | 0150-0093 |
| A5C72 | 0160-2605 | 5 | | CAPACITOR-FXD .02UF +80-20% 25VDC CER | 28480 | 0160-2605 |
| A5C73 | 0160-2960 | 5 | | CAPACITOR-FXD .05UF +-20% 100VDC CER | 28480 | 0160-2960 |
| A5C74 | 0160-2605 | 5 | | CAPACITOR-FXD .02UF +80-20% 25VDC CER | 28480 | 0160-2605 |
| A5C75 | 0160-2960 | 5 | | CAPACITOR-FXD .05UF +-20% 100VDC CER | 28480 | 0160-2960 |
| A5C76 | 0160-2960 | 5 | | CAPACITOR-FXD .05UF +-20% 100VDC CER | 28480 | 0160-2960 |
| A5C77 | 0160-2960 | 5 | | CAPACITOR-FXD .05UF +-20% 100VDC CER | 28480 | 0160-2960 |
| A5C78 | 0180-0061 | 5 | | CAPACITOR-FXD 100UF+75-10% 16VDC AL | 56289 | 30D107G016DC2 |
| A5C79 | 0180-0061 | 5 | | CAPACITOR-FXD 100UF+75-10% 16VDC AL | 56289 | 30D107G016DC2 |
| A5C81 | 0180-0061 | 5 | | CAPACITOR-FXD 100UF+75-10% 16VDC AL | 56289 | 30D107G016DC2 |
| A5C82 | 0180-0061 | 5 | | CAPACITOR-FXD 100UF+75-10% 16VDC AL | 56289 | 30D107G016DC2 |
| A5CR1 | 1901-0040 | 1 | | DIODE-SWITCHING 30V 50MA 2NS DO-35 | 28480 | 1901-0040 |
| A5CR2 | 1901-0040 | 1 | | DIODE-SWITCHING 30V 50MA 2NS DO-35 | 28480 | 1901-0040 |
| A5CR3 | 1901-0040 | 1 | | DIODE-SWITCHING 30V 50MA 2NS DO-35 | 28480 | 1901-0040 |
| A5CR4 | 1901-0040 | 1 | | DIODE-SWITCHING 30V 50MA 2NS DO-35 | 28480 | 1901-0040 |
| A5CR5 | 1901-0040 | 1 | | DIODE-SWITCHING 30V 50MA 2NS DO-35 | 28480 | 1901-0040 |
| A5CR6 | 1901-0040 | 1 | | DIODE-SWITCHING 30V 50MA 2NS DO-35 | 28480 | 1901-0040 |
| A5CR7 | 1901-0040 | 1 | | DIODE-SWITCHING 30V 50MA 2NS DO-35 | 28480 | 1901-0040 |
| A5CR8 | 1901-0040 | 1 | | DIODE-SWITCHING 30V 50MA 2NS DO-35 | 28480 | 1901-0040 |
| A5CR9 | 1901-0040 | 1 | | DIODE-SWITCHING 30V 50MA 2NS DO-35 | 28480 | 1901-0040 |
| A5CR11 | 1901-0040 | 1 | | DIODE-SWITCHING 30V 50MA 2NS DO-35 | 28480 | 1901-0040 |
| A5CR12 | 1901-0040 | 1 | | DIODE-SWITCHING 30V 50MA 2NS DO-35 | 28480 | 1901-0040 |
| A5CR13 | 1901-0040 | 1 | | DIODE-SWITCHING 30V 50MA 2NS DO-35 | 28480 | 1901-0040 |
| A5CR14 | 1901-0040 | 1 | | DIODE-SWITCHING 30V 50MA 2NS DO-35 | 28480 | 1901-0040 |
| A5CR15 | 1901-0040 | 1 | | DIODE-SWITCHING 30V 50MA 2NS DO-35 | 28480 | 1901-0040 |
| A5CR16 | 1901-0040 | 1 | | DIODE-SWITCHING 30V 50MA 2NS DO-35 | 28480 | 1901-0040 |
| A5CR17 | 1901-0040 | 1 | | DIODE-SWITCHING 30V 50MA 2NS DO-35 | 28480 | 1901-0040 |
| A5CR18 | 1901-0040 | 1 | | DIODE-SWITCHING 30V 50MA 2NS DO-35 | 28480 | 1901-0040 |
| A5CR19 | 1901-0040 | 1 | | DIODE-SWITCHING 30V 50MA 2NS DO-35 | 28480 | 1901-0040 |
| A5CR21 | 1901-0040 | 1 | | DIODE-SWITCHING 30V 50MA 2NS DO-35 | 28480 | 1901-0040 |
| A5CR22 | 1901-0040 | 1 | | DIODE-SWITCHING 30V 50MA 2NS DO-35 | 28480 | 1901-0040 |
| A5CR23 | 1901-0040 | 1 | | DIODE-SWITCHING 30V 50MA 2NS DO-35 | 28480 | 1901-0040 |
| A5CR24 | 1901-0040 | 1 | | DIODE-SWITCHING 30V 50MA 2NS DO-35 | 28480 | 1901-0040 |
| A5CR25 | 1901-0040 | 1 | | DIODE-SWITCHING 30V 50MA 2NS DO-35 | 28480 | 1901-0040 |
| A5CR26 | 1901-0040 | 1 | | DIODE-SWITCHING 30V 50MA 2NS DO-35 | 28480 | 1901-0040 |
| A5CR27 | 1901-0040 | 1 | | DIODE-SWITCHING 30V 50MA 2NS DO-35 | 28480 | 1901-0040 |

See introduction to this section for ordering information
*Indicates factory selected value

Replaceable Parts

## Table 6-3. Replaceable Parts (Cont'd).

| Reference Designation | HP Part Number | C D | Qty | Description | Mfr Code | Mfr Part Number |
|---|---|---|---|---|---|---|
| A5CR28 | 1901-0040 | 1 | | DIODE-SWITCHING 30V 50MA 2NS DO-35 | 28480 | 1901-0040 |
| A5CR29 | 1901-0040 | 1 | | DIODE-SWITCHING 30V 50MA 2NS DO-35 | 28480 | 1901-0040 |
| A5CR31 | 1901-0040 | 1 | | DIODE-SWITCHING 30V 50MA 2NS DO-35 | 28480 | 1901-0040 |
| A5CR32 | 1901-0040 | 1 | | DIODE-SWITCHING 30V 50MA 2NS DO-35 | 28480 | 1901-0040 |
| A5L1 | 9100-3276 | 1 | 5 | INDUCTORRF-CH-MLD 10MH 2% .62D Q=100 | 28480 | 9100-3276 |
| A5L2 | 9100-3276 | 1 | | INDUCTORRF-CH-MLD 10MH 2% .62D Q=100 | 28480 | 9100-3276 |
| A5L3 | 9100-3276 | 1 | | INDUCTORRF-CH-MLD 10MH 2% .62D Q=100 | 28480 | 9100-3276 |
| A5L4 | 9100-3276 | 1 | | INDUCTORRF-CH-MLD 10MH 2% .62D Q=100 | 28480 | 9100-3276 |
| A5L5 | 9100-3276 | 1 | | INDUCTORRF-CH-MLD 10MH 2% .62D Q=100 | 28480 | 9100-3276 |
| A5L6 | 9140-0137 | 1 | | INDUCTORRF-CH-MLD 1MH 5% .2DX.45LG Q=60 | 28480 | 9140-0137 |
| A5L7 | 9140-0137 | 1 | | INDUCTORRF-CH-MLD 1MH 5% .2DX.45LG Q=60 | 28480 | 9140-0137 |
| A5Q1 | 1855-0081 | 1 | | TRANSISTOR J-FET N-CHAN D-MODE SI | 01295 | 2N5245 |
| A5Q2 | 1853-0010 | 2 | | TRANSISTOR PNP SI TO-18 PD=360MW | 28480 | 1853-0010 |
| A5Q3 | 1854-0071 | 7 | | TRANSISTOR NPN SI PD=300MW FT=200MHZ | 28480 | 1854-0071 |
| A5Q4 | 1854-0071 | 7 | | TRANSISTOR NPN SI PD=300MW FT=200MHZ | 28480 | 1854-0071 |
| A5Q5 | 1855-0081 | 1 | | TRANSISTOR J-FET N-CHAN D-MODE SI | 01295 | 2N5245 |
| A5Q6 | 1853-0010 | 2 | | TRANSISTOR PNP SI TO-18 PD=360MW | 28480 | 1853-0010 |
| A5Q7 | 1854-0071 | 7 | | TRANSISTOR NPN SI PD=300MW FT=200MHZ | 28480 | 1854-0071 |
| A5Q8 | 1854-0071 | 7 | | TRANSISTOR NPN SI PD=300MW FT=200MHZ | 28480 | 1854-0071 |
| A5Q9 | 1855-0081 | 1 | | TRANSISTOR J-FET N-CHAN D-MODE SI | 01295 | 2N5245 |
| A5Q11 | 1853-0010 | 2 | | TRANSISTOR PNP SI TO-18 PD=360MW | 28480 | 1853-0010 |
| A5Q12 | 1854-0071 | 7 | | TRANSISTOR NPN SI PD=300MW FT=200MHZ | 28480 | 1854-0071 |
| A5Q13 | 1854-0071 | 7 | | TRANSISTOR NPN SI PD=300MW FT=200MHZ | 28480 | 1854-0071 |
| A5Q14 | 1855-0081 | 1 | | TRANSISTOR J-FET N-CHAN D-MODE SI | 01295 | 2N5245 |
| A5Q15 | 1853-0010 | 2 | | TRANSISTOR PNP SI TO-18 PD=360MW | 28480 | 1853-0010 |
| A5Q16 | 1854-0071 | 7 | | TRANSISTOR NPN SI PD=300MW FT=200MHZ | 28480 | 1854-0071 |
| A5Q17 | 1854-0071 | 7 | | TRANSISTOR NPN SI PD=300MW FT=200MHZ | 28480 | 1854-0071 |
| A5Q18 | 1854-0226 | 4 | 4 | TRANSISTOR NPN 2N3384 SI TO-18 PD=500MW | 13606 | 2N3384 |
| A5Q19 | 1853-0010 | 2 | | TRANSISTOR PNP SI TO-18 PD=360MW | 28480 | 1853-0010 |
| A5Q21 | 1854-0071 | 7 | | TRANSISTOR NPN SI PD=300MW FT=200MHZ | 28480 | 1854-0071 |
| A5Q22 | 1854-0071 | 7 | | TRANSISTOR NPN SI PD=300MW FT=200MHZ | 28480 | 1854-0071 |
| A5R | 0837-0086 | 7 | 1 | THERMISTOR DISC 200-OHM TC=-4.4%/C-DEG | 28480 | 0837-0086 |
| A5R1* | 0698-999P | 9 | | RESISTOR-PAD VALUE | 28480 | 0698-999P |
| A5R2 | 0698-4399 | 7 | 5 | RESISTOR 88.7 1% .125W F TC=0+-100 | 24546 | C4-1/8-T0-88R7-F |
| A5R3 | 0698-4517 | 1 | 5 | RESISTOR 127K 1% .125W F TC=0+-100 | 24546 | C4-1/8-T0-1273-F |
| A5R4 | 0698-4486 | 3 | | RESISTOR 24.9K 1% .125W F TC=0+-100 | 24546 | C4-1/8-T0-2492-F |
| A5R5 | 0698-3382 | 6 | 5 | RESISTOR 5.49K 1% .125W F TC=0+-100 | 24546 | C4-1/8-T0-5491-F |
| A5R6 | 0757-0283 | 6 | 13 | RESISTOR 2K 1% .125W F TC=0+-100 | 24546 | C4-1/8-T0-2001-F |
| A5R7 | 0698-4481 | 8 | | RESISTOR 16.5K 1% .125W F TC=0+-100 | 24546 | C4-1/8-T0-1652-F |
| A5R8 | 0684-1041 | 1 | | RESISTOR 100K 10% .25W FC TC=-400/+800 | 01121 | CB1041 |
| A5R9 | 0757-0460 | 1 | 5 | RESISTOR 61.9K 1% .125W F TC=0+-100 | 24546 | C4-1/8-T0-6192-F |
| A5R10 | 0684-1531 | 4 | | RESISTOR 15K 10% .25W FC TC=-400/+800 | 01121 | CB1531 |
| A5R11 | 0757-0445 | 2 | 5 | RESISTOR 13K 1% .125W F TC=0+-100 | 24546 | C4-1/8-T0-1302-F |
| A5R12 | 0698-4441 | 0 | 7 | RESISTOR 3.74K 1% .125W F TC=0+-100 | 24546 | C4-1/8-T0-3741-F |
| A5R13 | 0698-3495 | 2 | 6 | RESISTOR 866 1% .125W F TC=0+-100 | 24546 | C4-1/8-T0-866R-F |
| A5R14 | 0757-0403 | 2 | 5 | RESISTOR 121 1% .125W F TC=0+-100 | 24546 | C4-1/8-T0-121R-F |
| A5R15 | 0698-3516 | 8 | | RESISTOR 6.34K 1% .125W F TC=0+-100 | 24546 | C4-1/8-T0-6341-F |
| A5R16 | 0698-4462 | 5 | 5 | RESISTOR 768 1% .125W F TC=0+-100 | 24546 | C4-1/8-T0-768R-F |
| A5R17 | 0684-2731 | 8 | 11 | RESISTOR 27K 10% .25W FC TC=-400/+800 | 01121 | CB2731 |
| A5R18 | 0684-2731 | 8 | | RESISTOR 27K 10% .25W FC TC=-400/+800 | 01121 | CB2731 |
| A5R19 | 0684-1531 | 4 | | RESISTOR 15K 10% .25W FC TC=-400/+800 | 01121 | CB1531 |
| A5R21 | 0684-1531 | 4 | | RESISTOR 15K 10% .25W FC TC=-400/+800 | 01121 | CB1531 |
| A5R22 | 0684-1041 | 1 | | RESISTOR 100K 10% .25W FC TC=-400/+800 | 01121 | CB1041 |
| A5R23 | 0683-1025 | 9 | 8 | RESISTOR 1K 5% .25W FC TC=-400/+600 | 01121 | CB1025 |
| A5R24 | 0683-1025 | 9 | | RESISTOR 1K 5% .25W FC TC=-400/+600 | 01121 | CB1025 |
| A5R25 | 0683-1025 | 9 | | RESISTOR 1K 5% .25W FC TC=-400/+600 | 01121 | CB1025 |
| A5R27 | 0698-4399 | 7 | | RESISTOR 88.7 1% .125W F TC=0+-100 | 24546 | C4-1/8-T0-88R7-F |
| A5R28 | 0698-4517 | 1 | | RESISTOR 127K 1% .125W F TC=0+-100 | 24546 | C4-1/8-T0-1273-F |
| A5R29 | 0698-4486 | 3 | | RESISTOR 24.9K 1% .125W F TC=0+-100 | 24546 | C4-1/8-T0-2492-F |
| A5R31 | 0698-3382 | 6 | | RESISTOR 5.49K 1% .125W F TC=0+-100 | 24546 | C4-1/8-T0-5491-F |
| A5R32 | 0757-0283 | 6 | | RESISTOR 2K 1% .125W F TC=0+-100 | 24546 | C4-1/8-T0-2001-F |
| A5R33 | 0698-4481 | 8 | | RESISTOR 16.5K 1% .125W F TC=0+-100 | 24546 | C4-1/8-T0-1652-F |
| A5R34 | 0684-1041 | 1 | | RESISTOR 100K 10% .25W FC TC=-400/+800 | 01121 | CB1041 |
| A5R35 | 0757-0460 | 1 | | RESISTOR 61.9K 1% .125W F TC=0+-100 | 24546 | C4-1/8-T0-6192-F |
| A5R36 | 0757-0445 | 2 | | RESISTOR 13K 1% .125W F TC=0+-100 | 24546 | C4-1/8-T0-1302-F |
| A5R37 | 0698-4441 | 0 | | RESISTOR 3.74K 1% .125W F TC=0+-100 | 24546 | C4-1/8-T0-3741-F |
| A5R38 | 0698-3495 | 2 | | RESISTOR 866 1% .125W F TC=0+-100 | 24546 | C4-1/8-T0-866R-F |
| A5R39 | 0757-0403 | 2 | | RESISTOR 121 1% .125W F TC=0+-100 | 24546 | C4-1/8-T0-121R-F |
| A5R41 | 0698-3516 | 8 | | RESISTOR 6.34K 1% .125W F TC=0+-100 | 24546 | C4-1/8-T0-6341-F |
| A5R42 | 0698-4462 | 5 | | RESISTOR 768 1% .125W F TC=0+-100 | 24546 | C4-1/8-T0-768R-F |
| A5R43 | 0684-2731 | 8 | | RESISTOR 27K 10% .25W FC TC=-400/+800 | 01121 | CB2731 |
| A5R44 | 0684-2731 | 8 | | RESISTOR 27K 10% .25W FC TC=-400/+800 | 01121 | CB2731 |
| A5R45 | 0684-1531 | 4 | | RESISTOR 15K 10% .25W FC TC=-400/+800 | 01121 | CB1531 |
| A5R46 | 0684-1531 | 4 | | RESISTOR 15K 10% .25W FC TC=-400/+800 | 01121 | CB1531 |
| A5R47 | 0684-1041 | 1 | | RESISTOR 100K 10% .25W FC TC=-400/+800 | 01121 | CB1041 |
| A5R49 | 0698-4399 | 7 | | RESISTOR 88.7 1% .125W F TC=0+-100 | 24546 | C4-1/8-T0-88R7-F |

See introduction to this section for ordering information
*Indicates factory selected value

Replaceable Parts

## Table 6-3. Replaceable Parts (Cont'd).

| Reference Designation | HP Part Number | C D | Qty | Description | Mfr Code | Mfr Part Number |
|---|---|---|---|---|---|---|
| A5R51 | 0698-4517 | 1 | | RESISTOR 127K 1% .125W F TC=0+-100 | 24546 | C4-1/8-T0-1273-F |
| A5R52 | 0698-4486 | 3 | | RESISTOR 24.9K 1% .125W F TC=0+-100 | 24546 | C4-1/8-T0-2492-F |
| A5R53 | 0698-3382 | 6 | | RESISTOR 5.49K 1% .125W F TC=0+-100 | 24546 | C4-1/8-T0-5491-F |
| A5R54 | 0757-0283 | 6 | | RESISTOR 2K 1% .125W F TC=0+-100 | 24546 | C4-1/8-T0-2001-F |
| A5R55 | 0698-4481 | 8 | | RESISTOR 16.5K 1% .125W F TC=0+-100 | 24546 | C4-1/8-T0-1652-F |
| A5R56 | 0684-1041 | 1 | | RESISTOR 100K 10% .25W FC TC=-400/+800 | 01121 | CB1041 |
| A5R57 | 0757-0460 | 1 | | RESISTOR 61.9K 1% .125W F TC=0+-100 | 24546 | C4-1/8-T0-6192-F |
| A5R58 | 0757-0445 | 2 | | RESISTOR 13K 1% .125W F TC=0+-100 | 24546 | C4-1/8-T0-1302-F |
| A5R59 | 0698-4441 | 0 | | RESISTOR 3.74K 1% .125W F TC=0+-100 | 24546 | C4-1/8-T0-3741-F |
| A5R61 | 0698-3495 | 2 | | RESISTOR 866 1% .125W F TC=0+-100 | 24546 | C4-1/8-T0-866R-F |
| A5R62 | 0757-0403 | 2 | | RESISTOR 121 1% .125W F TC=0+-100 | 24546 | C4-1/8-T0-121R-F |
| A5R63 | 0698-3516 | 8 | | RESISTOR 6.34K 1% .125W F TC=0+-100 | 24546 | C4-1/8-T0-6341-F |
| A5R64 | 0698-4462 | 5 | | RESISTOR 768 1% .125W F TC=0+-100 | 24546 | C4-1/8-T0-768R-F |
| A5R65 | 0684-2731 | 8 | | RESISTOR 27K 10% .25W FC TC=-400/+800 | 01121 | CB2731 |
| A5R66 | 0684-2731 | 8 | | RESISTOR 27K 10% .25W FC TC=-400/+800 | 01121 | CB2731 |
| A5R67 | 0684-1531 | 4 | | RESISTOR 15K 10% .25W FC TC=-400/+800 | 01121 | CB1531 |
| A5R68 | 0684-1531 | 4 | | RESISTOR 15K 10% .25W FC TC=-400/+800 | 01121 | CB1531 |
| A5R69 | 0684-1041 | 1 | | RESISTOR 100K 10% .25W FC TC=-400/+800 | 01121 | CB1041 |
| A5R72 | 0698-4399 | 7 | | RESISTOR 88.7 1% .125W F TC=0+-100 | 24546 | C4-1/8-T0-88R7-F |
| A5R73 | 0698-4517 | 1 | | RESISTOR 127K 1% .125W F TC=0+-100 | 24546 | C4-1/8-T0-1273-F |
| A5R74 | 0698-4486 | 3 | | RESISTOR 24.9K 1% .125W F TC=0+-100 | 24546 | C4-1/8-T0-2492-F |
| A5R75 | 0698-3382 | 6 | | RESISTOR 5.49K 1% .125W F TC=0+-100 | 24546 | C4-1/8-T0-5491-F |
| A5R76 | 0757-0283 | 6 | | RESISTOR 2K 1% .125W F TC=0+-100 | 24546 | C4-1/8-T0-2001-F |
| A5R77 | 0698-4481 | 8 | | RESISTOR 16.5K 1% .125W F TC=0+-100 | 24546 | C4-1/8-T0-1652-F |
| A5R78 | 0684-1041 | 1 | | RESISTOR 100K 10% .25W FC TC=-400/+800 | 01121 | CB1041 |
| A5R79 | 0757-0460 | 1 | | RESISTOR 61.9K 1% .125W F TC=0+-100 | 24546 | C4-1/8-T0-6192-F |
| A5R81 | 0757-0445 | 2 | | RESISTOR 13K 1% .125W F TC=0+-100 | 24546 | C4-1/8-T0-1302-F |
| A5R82 | 0698-4441 | 0 | | RESISTOR 3.74K 1% .125W F TC=0+-100 | 24546 | C4-1/8-T0-3741-F |
| A5R83 | 0698-3495 | 2 | | RESISTOR 866 1% .125W F TC=0+-100 | 24546 | C4-1/8-T0-866R-F |
| A5R84 | 0757-0403 | 2 | | RESISTOR 121 1% .125W F TC=0+-100 | 24546 | C4-1/8-T0-121R-F |
| A5R85 | 0698-3516 | 8 | | RESISTOR 6.34K 1% .125W F TC=0+-100 | 24546 | C4-1/8-T0-6341-F |
| A5R86 | 0698-4462 | 5 | | RESISTOR 768 1% .125W F TC=0+-100 | 24546 | C4-1/8-T0-768R-F |
| A5R87 | 0684-2731 | 8 | | RESISTOR 27K 10% .25W FC TC=-400/+800 | 01121 | CB2731 |
| A5R88 | 0684-2731 | 8 | | RESISTOR 27K 10% .25W FC TC=-400/+800 | 01121 | CB2731 |
| A5R89 | 0684-1531 | 4 | | RESISTOR 15K 10% .25W FC TC=-400/+800 | 01121 | CB1531 |
| A5R91 | 0684-1531 | 4 | | RESISTOR 15K 10% .25W FC TC=-400/+800 | 01121 | CB1531 |
| A5R92 | 0684-1041 | 1 | | RESISTOR 100K 10% .25W FC TC=-400/+800 | 01121 | CB1041 |
| A5R94 | 0698-4399 | 7 | | RESISTOR 88.7 1% .125W F TC=0+-100 | 24546 | C4-1/8-T0-88R7-F |
| A5R95 | 0698-4517 | 1 | | RESISTOR 127K 1% .125W F TC=0+-100 | 24546 | C4-1/8-T0-1273-F |
| A5R96 | 0757-0401 | 0 | | RESISTOR 100 1% .125W F TC=0+-100 | 24546 | C4-1/8-T0-101-F |
| A5R97 | 0698-4486 | 3 | | RESISTOR 24.9K 1% .125W F TC=0+-100 | 24546 | C4-1/8-T0-2492-F |
| A5R98 | 0698-3223 | 4 | 1 | RESISTOR 1.24K 1% .125W F TC=0+-100 | 24546 | C4-1/8-T0-1241-F |
| A5R99 | 0757-0283 | 6 | | RESISTOR 2K 1% .125W F TC=0+-100 | 24546 | C4-1/8-T0-2001-F |
| A5R101 | 0698-3155 | 1 | 1 | RESISTOR 4.64K 1% .125W F TC=0+-100 | 24546 | C4-1/8-T0-4641-F |
| A5R102 | 0684-1041 | 1 | | RESISTOR 100K 10% .25W FC TC=-400/+800 | 01121 | CB1041 |
| A5R103 | 0757-0460 | 1 | | RESISTOR 61.9K 1% .125W F TC=0+-100 | 24546 | C4-1/8-T0-6192-F |
| A5R104 | 0757-0445 | 2 | | RESISTOR 13K 1% .125W F TC=0+-100 | 24546 | C4-1/8-T0-1302-F |
| A5R106 | 0698-3495 | 2 | | RESISTOR 866 1% .125W F TC=0+-100 | 24546 | C4-1/8-T0-866R-F |
| A5R107 | 0757-0403 | 2 | | RESISTOR 121 1% .125W F TC=0+-100 | 24546 | C4-1/8-T0-121R-F |
| A5R108 | 0698-3516 | 8 | | RESISTOR 6.34K 1% .125W F TC=0+-100 | 24546 | C4-1/8-T0-6341-F |
| A5R109 | 0698-4462 | 5 | | RESISTOR 768 1% .125W F TC=0+-100 | 24546 | C4-1/8-T0-768R-F |
| A5R111 | 0684-2731 | 8 | | RESISTOR 27K 10% .25W FC TC=-400/+800 | 01121 | CB2731 |
| A5R112 | 0684-2731 | 8 | | RESISTOR 27K 10% .25W FC TC=-400/+800 | 01121 | CB2731 |
| A5R113 | 0684-2731 | 8 | | RESISTOR 27K 10% .25W FC TC=-400/+800 | 01121 | CB2731 |
| A5R114 | 0684-1531 | 4 | | RESISTOR 15K 10% .25W FC TC=-400/+800 | 01121 | CB1531 |
| A5R115 | 0684-1531 | 4 | | RESISTOR 15K 10% .25W FC TC=-400/+800 | 01121 | CB1531 |
| A5R116 | 0757-0442 | 9 | | RESISTOR 10K 1% .125W F TC=0+-100 | 24546 | C4-1/8-T0-1002-F |
| A5R117 | 0684-1041 | 1 | | RESISTOR 100K 10% .25W FC TC=-400/+800 | 01121 | CB1041 |
| A5R118 | 0757-0394 | 0 | | RESISTOR 51.1 1% .125W F TC=0+-100 | 24546 | C4-1/8-T0-51R1-F |
| A5R119 | 0757-0394 | 0 | | RESISTOR 51.1 1% .125W F TC=0+-100 | 24546 | C4-1/8-T0-51R1-F |
| A5R405 | 0698-4441 | 0 | | RESISTOR 3.74K 1% .125W F TC=0+-100 | 24546 | C4-1/8-T0-3741-F |
| A5T1 | 9100-3262 | 5 | 5 | TRANSFORMER | 28480 | 9100-3262 |
| A5T2 | 9100-3262 | 5 | | TRANSFORMER | 28480 | 9100-3262 |
| A5T3 | 9100-3262 | 5 | | TRANSFORMER | 28480 | 9100-3262 |
| A5T4 | 9100-3262 | 5 | | TRANSFORMER | 28480 | 9100-3262 |
| A5T5 | 9100-3262 | 5 | | TRANSFORMER | 28480 | 9100-3262 |
| A5Y1 | 0410-0480 | 1 | 5 | CRYSTAL SET :NOT FIELD REPLACEABLE (SEE P. 7-25) | 28480 | 0410-0480 |
| A5Y2 | 0410-0480 | 1 | | CRYSTAL SET :NOT FIELD REPLACEABLE (SEE P. 7-25) | 28480 | 0410-0480 |
| A5Y3 | 0410-0480 | 1 | | CRYSTAL SET :NOT FIELD REPLACEABLE (SEE P. 7-25) | 28480 | 0410-0480 |
| A5Y4 | 0410-0480 | 1 | | CRYSTAL SET :NOT FIELD REPLACEABLE (SEE P. 7-25) | 28480 | 0410-0480 |
| A5Y5 | 0410-0480 | 1 | | CRYSTAL SET :NOT FIELD REPLACEABLE (SEE P. 7-25) | 28480 | 0410-0480 |
| A6 | 03580-66526 | 6 | 1 | BOARD ASSEMBLY-LOW VOLTAGE POWER SUPPLY | 28480 | 03580-66526 |

See introduction to this section for ordering information
*Indicates factory selected value

Replaceable Parts

## Table 6-3. Replaceable Parts (Cont'd).

| Reference Designation | HP Part Number | C D | Qty | Description | Mfr Code | Mfr Part Number |
|---|---|---|---|---|---|---|
| A6C1 | 0180-1746 | 5 | | CAPACITOR-FXD 15UF+-10% 20VDC TA | 56289 | 150D156X9020B2 |
| A6C2 | 0180-0291 | 3 | | CAPACITOR-FXD 1UF+-10% 35VDC TA | 56289 | 150D105X9035A2 |
| A6C3 | 0180-2960 | 7 | 2 | CAPACITOR-FXD 1000UF+75-10% 35VDC AL | 28480 | 0180-2960 |
| A6C4 | 0180-2960 | 7 | | CAPACITOR-FXD 1000UF+75-10% 35VDC AL | 28480 | 0180-2960 |
| A6C5 | 0180-0291 | 3 | | CAPACITOR-FXD 1UF+-10% 35VDC TA | 56289 | 150D105X9035A2 |
| A6C6 | 0180-1746 | 5 | | CAPACITOR-FXD 15UF+-10% 20VDC TA | 56289 | 150D156X9020B2 |
| A6C7 | 0180-0224 | 2 | 1 | CAPACITOR-FXD 10UF+75-10% 16VDC AL | 56289 | 30D106G016BA2 |
| A6C8 | 0180-0291 | 3 | | CAPACITOR-FXD 1UF+-10% 35VDC TA | 56289 | 150D105X9035A2 |
| A6C9 | 0180-0291 | 3 | | CAPACITOR-FXD 1UF+-10% 35VDC TA | 56289 | 150D105X9035A2 |
| A6C11 | 0140-0206 | 6 | 2 | CAPACITOR-FXD 270PF +-5% 500VDC MICA | 72136 | DM15F271J0500WV1CR |
| A6C12 | 0150-0022 | 5 | | CAPACITOR-FXD 3.3PF +-10% 500VDC TI DIOX | 28480 | 0150-0022 |
| A6C13 | 0180-0291 | 3 | | CAPACITOR-FXD 1UF+-10% 35VDC TA | 56289 | 150D105X9035A2 |
| A6C14 | 0140-0217 | 9 | 2 | CAPACITOR-FXD 140PF +-2% 300VDC MICA | 72136 | DM15F141G0300WV1CR |
| A6C15 | 0150-0022 | 5 | | CAPACITOR-FXD 3.3PF +-10% 500VDC TI DIOX | 28480 | 0150-0022 |
| A6C16 | 0160-0161 | 4 | | CAPACITOR-FXD .01UF +-10% 200VDC POLYE | 28480 | 0160-0161 |
| A6C16 | 0160-0161 | 4 | 3 | CAPACITOR-FXD .01UF +-10% 200VDC POLYE | 28480 | 0160-0161 |
| A6C18 | 0180-0061 | 5 | | CAPACITOR-FXD 100UF+75-10% 16VDC AL | 56289 | 30D107G016DC2 |
| A6C19 | 0180-1746 | 5 | | CAPACITOR-FXD 15UF+-10% 20VDC TA | 56289 | 150D156X9020B2 |
| A6C21 | 0180-0061 | 5 | | CAPACITOR-FXD 100UF+75-10% 16VDC AL | 56289 | 30D107G016DC2 |
| A6C22 | 0180-1746 | 5 | | CAPACITOR-FXD 15UF+-10% 20VDC TA | 56289 | 150D156X9020B2 |
| A6C24 | 0180-0291 | 3 | | CAPACITOR-FXD 1UF+-10% 35VDC TA | 56289 | 150D105X9035A2 |
| A6C30 | 0180-0291 | 3 | | CAPACITOR-FXD 1UF+-10% 35VDC TA | 56289 | 150D105X9035A2 |
| A6CR1 | 1902-3149 | 9 | 1 | DIODE-ZNR 9.09V 5% DO-35 PD=.4W | 28480 | 1902-3149 |
| A6CR2 | 1901-0040 | 1 | | DIODE-SWITCHING 30V 50MA 2NS DO-35 | 28480 | 1901-0040 |
| A6CR3 | 1901-0040 | 1 | | DIODE-SWITCHING 30V 50MA 2NS DO-35 | 28480 | 1901-0040 |
| A6CR4 | 1901-0040 | 1 | | DIODE-SWITCHING 30V 50MA 2NS DO-35 | 28480 | 1901-0040 |
| A6CR7 | 1901-0704 | 4 | 8 | DIODE-PWR RECT 1N4002 100V 1A DO-41 | 01295 | 1N4002 |
| A6CR8 | 1901-0704 | 4 | | DIODE-PWR RECT 1N4002 100V 1A DO-41 | 01295 | 1N4002 |
| A6CR9 | 1901-0704 | 4 | | DIODE-PWR RECT 1N4002 100V 1A DO-41 | 01295 | 1N4002 |
| A6CR11 | 1901-0704 | 4 | | DIODE-PWR RECT 1N4002 100V 1A DO-41 | 01295 | 1N4002 |
| A6CR15 | 1902-0025 | 4 | 2 | DIODE-ZNR 10V 5% DO-35 PD=.4W TC=+.06% | 28480 | 1902-0025 |
| A6CR16 | 1902-0777 | 3 | 1 | DIODE-ZNR 1N825 6.2V 5% DO-7 PD=.4W | 04713 | 1N825 |
| A6CR17 | 1901-0040 | 1 | | DIODE-SWITCHING 30V 50MA 2NS DO-35 | 28480 | 1901-0040 |
| A6CR18 | 1901-0040 | 1 | | DIODE-SWITCHING 30V 50MA 2NS DO-35 | 28480 | 1901-0040 |
| A6CR19 | 1901-0040 | 1 | | DIODE-SWITCHING 30V 50MA 2NS DO-35 | 28480 | 1901-0040 |
| A6CR20 | 1902-3190 | 0 | 2 | DIODE-ZNR 13V 5% DO-35 PD=.4W TC=+.06% | 28480 | 1902-3190 |
| A6CR21 | 1902-0025 | 4 | | DIODE-ZNR 10V 5% DO-35 PD=.4W TC=+.06% | 28480 | 1902-0025 |
| A6CR22 | 1901-0040 | 1 | | DIODE-SWITCHING 30V 50MA 2NS DO-35 | 28480 | 1901-0040 |
| A6CR23 | 1901-0040 | 1 | | DIODE-SWITCHING 30V 50MA 2NS DO-35 | 28480 | 1901-0040 |
| A6CR24 | 1902-3190 | 0 | | DIODE-ZNR 13V 5% DO-35 PD=.4W TC=+.06% | 28480 | 1902-3190 |
| A6CR26 | 1901-0704 | 4 | | DIODE-PWR RECT 1N4002 100V 1A DO-41 | 01295 | 1N4002 |
| A6CR27 | 1901-0704 | 4 | | DIODE-PWR RECT 1N4002 100V 1A DO-41 | 01295 | 1N4002 |
| A6CR28 | 1901-0704 | 4 | | DIODE-PWR RECT 1N4002 100V 1A DO-41 | 01295 | 1N4002 |
| A6CR29 | 1901-0704 | 4 | | DIODE-PWR RECT 1N4002 100V 1A DO-41 | 01295 | 1N4002 |
| A6F1 | 2110-0490 | 9 | 1 | FUSE .375A 125V .281X.093 | 75915 | 275.375 |
| A6F2 | 2110-0297 | 4 | 1 | FUSE .5A 125V .281X.093 | 28480 | 2110-0297 |
| A6K1 | 0490-1208 | 1 | 2 | RELAY-REED 1A 500MA 200VDC 10VDC-COIL | 28480 | 0490-1208 |
| A6K2 | 0490-1208 | 1 | | RELAY-REED 1A 500MA 200VDC 10VDC-COIL | 28480 | 0490-1208 |
| A6Q1 | 1853-0010 | 2 | | TRANSISTOR PNP SI TO-18 PD=360MW | 28480 | 1853-0010 |
| A6Q2 | 1854-0404 | 0 | 7 | TRANSISTOR NPN SI TO-18 PD=360MW | 28480 | 1854-0404 |
| A6Q3 | 1853-0052 | 2 | 2 | TRANSISTOR PNP 2N3740 SI TO-66 PD=25W | 04713 | 2N3740 |
| A6Q4 | 1854-0404 | 0 | | TRANSISTOR NPN SI TO-18 PD=360MW | 28480 | 1854-0404 |
| A6Q5 | 1853-0010 | 2 | | TRANSISTOR PNP SI TO-18 PD=360MW | 28480 | 1853-0010 |
| A6Q6 | 1854-0404 | 0 | | TRANSISTOR NPN SI TO-18 PD=360MW | 28480 | 1854-0404 |
| A6Q7 | 1853-0010 | 2 | | TRANSISTOR PNP SI TO-18 PD=360MW | 28480 | 1853-0010 |
| A6Q8 | 1853-0010 | 2 | | TRANSISTOR PNP SI TO-18 PD=360MW | 28480 | 1853-0010 |
| A6Q9 | 1854-0072 | 8 | 2 | TRANSISTOR NPN 2N3054 SI TO-66 PD=25W | 01928 | 2N3054 |
| A6Q11 | 1853-0010 | 2 | | TRANSISTOR PNP SI TO-18 PD=360MW | 28480 | 1853-0010 |
| A6Q12 | 1853-0010 | 2 | | TRANSISTOR PNP SI TO-18 PD=360MW | 28480 | 1853-0010 |
| A6Q14 | 1853-0010 | 2 | | TRANSISTOR PNP SI TO-18 PD=360MW | 28480 | 1853-0010 |
| A6Q15 | 1854-0072 | 8 | | TRANSISTOR NPN 2N3054 SI TO-66 PD=25W | 01928 | 2N3054 |
| A6Q16 | 1853-0010 | 2 | | TRANSISTOR PNP SI TO-18 PD=360MW | 28480 | 1853-0010 |
| A6Q17 | 1854-0404 | 0 | | TRANSISTOR NPN SI TO-18 PD=360MW | 28480 | 1854-0404 |
| A6Q18 | 1854-0404 | 0 | | TRANSISTOR NPN SI TO-18 PD=360MW | 28480 | 1854-0404 |
| A6Q19 | 1853-0052 | 2 | | TRANSISTOR PNP 2N3740 SI TO-66 PD=25W | 04713 | 2N3740 |
| A6Q20 | 1854-0404 | 0 | | TRANSISTOR NPN SI TO-18 PD=360MW | 28480 | 1854-0404 |
| A6Q133 | 1854-0404 | 0 | | TRANSISTOR NPN SI TO-18 PD=360MW | 28480 | 1854-0404 |
| A6R1 | 0757-0433 | 8 | 2 | RESISTOR 3.32K 1% .125W F TC=0+-100 | 24546 | C4-1/8-T0-3321-F |
| A6R2 | 0698-4308 | 6 | 2 | RESISTOR 16.9K 1% .125W F TC=0+-100 | 24546 | C4-1/8-T0-1692-F |
| A6R3 | 0757-0438 | 3 | | RESISTOR 5.11K 1% .125W F TC=0+-100 | 24546 | C4-1/8-T0-5111-F |
| A6R4 | 0698-4123 | 5 | 4 | RESISTOR 499 1% .125W F TC=0+-100 | 24546 | C4-1/8-T0-499R-F |
| A6R5 | 0757-1092 | 7 | 1 | RESISTOR 287 1% .5W F TC=0+-100 | 28480 | 0757-1092 |

See introduction to this section for ordering information
*Indicates factory selected value

Replaceable Parts

## Table 6-3. Replaceable Parts (Cont'd).

| Reference Designation | HP Part Number | C D | Qty | Description | Mfr Code | Mfr Part Number |
|---|---|---|---|---|---|---|
| A6R6 | 0757-0282 | 5 | | RESISTOR 221 1% .125W F TC=0+-100 | 24546 | C4-1/8-T0-221R-F |
| A6R7 | 0757-0388 | 2 | 2 | RESISTOR 30.1 1% .125W F TC=0+-100 | 24546 | C4-1/8-T0-30R1-F |
| A6R8 | 0698-3559 | 9 | 1 | RESISTOR 3.9 10% .5W CC TC=0+412 | 01121 | EB39G1 |
| A6R9 | 0757-0388 | 2 | | RESISTOR 30.1 1% .125W F TC=0+-100 | 24546 | C4-1/8-T0-30R1-F |
| A6R11 | 0698-0001 | 0 | 1 | RESISTOR 4.7 5% .5W CC TC=0+412 | 01121 | EB47G5 |
| A6R12 | 0757-0433 | 8 | | RESISTOR 3.32K 1% .125W F TC=0+-100 | 24546 | C4-1/8-T0-3321-F |
| A6R13 | 0698-4308 | 8 | | RESISTOR 16.9K 1% .125W F TC=0+-100 | 24546 | C4-1/8-T0-1692-F |
| A6R14 | 0757-0438 | 3 | | RESISTOR 5.11K 1% .125W F TC=0+-100 | 24546 | C4-1/8-T0-5111-F |
| A6R15 | 0698-4123 | 5 | | RESISTOR 499 1% .125W F TC=0+-100 | 24546 | C4-1/8-T0-499R-F |
| A6R16 | 0757-0465 | 6 | | RESISTOR 100K 1% .125W F TC=0+-100 | 24546 | C4-1/8-T0-1003-F |
| A6R17 | 0757-0442 | 9 | | RESISTOR 10K 1% .125W F TC=0+-100 | 24546 | C4-1/8-T0-1002-F |
| A6R18 | 0757-0442 | 9 | | RESISTOR 10K 1% .125W F TC=0+-100 | 24546 | C4-1/8-T0-1002-F |
| A6R19 | 0686-3315 | 0 | 2 | RESISTOR 330 5% .5W CC TC=0+529 | 01121 | EB3315 |
| A6R21 | 0757-0469 | 0 | | RESISTOR 150K 1% .125W F TC=0+-100 | 24546 | C4-1/8-T0-1503-F |
| A6R22 | 0757-0458 | 7 | | RESISTOR 51.1K 1% .125W F TC=0+-100 | 24546 | C4-1/8-T0-5112-F |
| A6R23 | 0686-3315 | 0 | | RESISTOR 330 5% .5W CC TC=0+529 | 01121 | EB3315 |
| A6R24 | 0757-0465 | 6 | | RESISTOR 100K 1% .125W F TC=0+-100 | 24546 | C4-1/8-T0-1003-F |
| A6R25 | 0698-3488 | 3 | | RESISTOR 402 1% .125W F TC=0+-100 | 24546 | C4-1/8-T0-402R-F |
| A6R26 | 0698-4435 | 2 | | RESISTOR 2.49K 1% .125W F TC=0+-100 | 24546 | C4-1/8-T0-2491-F |
| A6R27 | 0698-3499 | 6 | | RESISTOR 40.2K 1% .125W F TC=0+-100 | 24546 | C4-1/8-T0-4022-F |
| A6R28 | 0757-0283 | 6 | | RESISTOR 2K 1% .125W F TC=0+-100 | 24546 | C4-1/8-T0-2001-F |
| A6R29 | 0698-3558 | 8 | | RESISTOR 4.02K 1% .125W F TC=0+-100 | 24546 | C4-1/8-T0-4021-F |
| A6R31 | 0757-0161 | 9 | 6 | RESISTOR 604 1% .125W F TC=0+-100 | 24546 | C4-1/8-T0-604R-F |
| A6R32 | 0811-3069 | 8 | 2 | RESISTOR 1 5% .5W PW TC=0+-150 | 75042 | BW20-1-1R0-J |
| A6R33 | 0698-4123 | 5 | | RESISTOR 499 1% .125W F TC=0+-100 | 24546 | C4-1/8-T0-499R-F |
| A6R34 | 0757-0283 | 6 | | RESISTOR 2K 1% .125W F TC=0+-100 | 24546 | C4-1/8-T0-2001-F |
| A6R35 | 0698-3245 | 0 | | RESISTOR 20.5K 1% .125W F TC=0+-100 | 24546 | C4-1/8-T0-2052-F |
| A6R36 | 0757-0442 | 9 | | RESISTOR 10K 1% .125W F TC=0+-100 | 24546 | C4-1/8-T0-1002-F |
| A6R37 | 0698-3245 | 0 | | RESISTOR 20.5K 1% .125W F TC=0+-100 | 24546 | C4-1/8-T0-2052-F |
| A6R38 | 0698-5323 | 9 | 1 | RESISTOR 4K .5% .125W F TC=0+-50 | 28480 | 0698-5323 |
| A6R39 | 0698-6846 | 3 | 1 | RESISTOR 5.42K .5% .125W F TC=0+-50 | 24546 | NC55-1/8-T2-5421-D |
| A6R41* | 0698-9999 | 9 | | RESISTOR-FXD PAD VALUE | 28480 | 0698-9999 |
| A6R42 | 0698-3279 | 0 | | RESISTOR 4.99K 1% .125W F TC=0+-100 | 24546 | C4-1/8-T0-4991-F |
| A6R43 | 0698-4509 | 1 | | RESISTOR 80.6K 1% .125W F TC=0+-100 | 24546 | C4-1/8-T0-8062-F |
| A6R44 | 0757-0283 | 6 | | RESISTOR 2K 1% .125W F TC=0+-100 | 24546 | C4-1/8-T0-2001-F |
| A6R45 | 0698-3558 | 8 | | RESISTOR 4.02K 1% .125W F TC=0+-100 | 24546 | C4-1/8-T0-4021-F |
| A6R46 | 0757-0161 | 9 | | RESISTOR 604 1% .125W F TC=0+-100 | 24546 | C4-1/8-T0-604R-F |
| A6R47 | 0698-4123 | 5 | | RESISTOR 499 1% .125W F TC=0+-100 | 24546 | C4-1/8-T0-499R-F |
| A6R48 | 0811-3069 | 8 | | RESISTOR 1 5% .5W PW TC=0+-150 | 75042 | BW20-1-1R0-J |
| A6R49 | 0698-3245 | 0 | | RESISTOR 20.5K 1% .125W F TC=0+-100 | 24546 | C4-1/8-T0-2052-F |
| A6R51 | 0757-0283 | 6 | | RESISTOR 2K 1% .125W F TC=0+-100 | 24546 | C4-1/8-T0-2001-F |
| A6R52 | 0698-3193 | 7 | 5 | RESISTOR 10K .25% .125W F TC=0+-50 | 28480 | 0698-3193 |
| A6R53 | 0698-3193 | 7 | | RESISTOR 10K .25% .125W F TC=0+-50 | 28480 | 0698-3193 |
| A6U1 | 1820-0223 | 0 | | IC OP AMP GP TO-99 | 04713 | MLM301AG |
| A6U2 | 1820-0223 | 0 | | IC OP AMP GP TO-99 | 04713 | MLM301AG |
| A6U3 | 1826-0393 | 7 | 1 | IC V RGLTR TO-220 | 27014 | LM317T |
| A6U4 | 1826-0527 | 9 | 1 | IC 337 V RGLTR TO-220 | 27014 | LM337T |
| A7 | 03580-66507 | 3 | 1 | BOARD ASSEMBLY-LOGIC | 28480 | 03580-66507 |
| A7 | 03580-69507 | | | REBUILT EXCHANGE ASSEMBLY | 28480 | 03580-69507 |
| A7C1 | 0180-0291 | 3 | | CAPACITOR-FXD 1UF+-10% 35VDC TA | 56289 | 150D105X9035A2 |
| A7C2 | 0160-2530 | 5 | 1 | CAPACITOR-FXD 180PF +-2% 300VDC MICA | 28480 | 0160-2530 |
| A7C3 | 0160-2012 | 8 | 1 | CAPACITOR-FXD 330PF +-5% 500VDC MICA | 28480 | 0160-2012 |
| A7C4 | 0160-0127 | 2 | 2 | CAPACITOR-FXD 1UF +-20% 25VDC CER | 28480 | 0160-0127 |
| A7C5 | 0160-0297 | 7 | 1 | CAPACITOR-FXD 1200PF +-10% 200VDC POLYE | 28480 | 0160-0297 |
| A7C6 | 0180-1746 | 5 | | CAPACITOR-FXD 15UF+-10% 20VDC TA | 56289 | 150D156X9020B2 |
| A7C7 | 0160-0127 | 2 | | CAPACITOR-FXD 1UF +-20% 25VDC CER | 28480 | 0160-0127 |
| A7C8 | 0180-0229 | 7 | 3 | CAPACITOR-FXD 33UF+-10% 10VDC TA | 56289 | 150D336X9010B2 |
| A7C9 | 0180-1746 | 5 | | CAPACITOR-FXD 15UF+-10% 20VDC TA | 56289 | 150D156X9020B2 |
| A7CR1 | 1902-0551 | 1 | 2 | DIODE-ZNR 6.19V 5% DO-15 PD=1W TC=+.022% | 28480 | 1902-0551 |
| A7CR2 | 1902-0551 | 1 | | DIODE-ZNR 6.19V 5% DO-15 PD=1W TC=+.022% | 28480 | 1902-0551 |
| A7L1 | 9100-0541 | 7 | | INDUCTORRF-CH-MLD 250UH 10% .25DX.5LG | 28480 | 9100-0541 |
| A7L2 | 9140-0129 | 1 | | INDUCTORRF-CH-MLD 220UH 5% .166DX.385LG | 28480 | 9140-0129 |
| A7L3 | 9100-0541 | 7 | | INDUCTORRF-CH-MLD 250UH 10% .25DX.5LG | 28480 | 9100-0541 |
| A7Q1 | 1854-0071 | 7 | | TRANSISTOR NPN SI PD=300MW FT=200MHZ | 28480 | 1854-0071 |
| A7Q2 | 1853-0010 | 2 | | TRANSISTOR PNP SI TO-18 PD=360MW | 28480 | 1853-0010 |
| A7Q3 | 1854-0071 | 7 | | TRANSISTOR NPN SI PD=300MW FT=200MHZ | 28480 | 1854-0071 |
| A7Q4 | 1853-0010 | 2 | | TRANSISTOR PNP SI TO-18 PD=360MW | 28480 | 1853-0010 |
| A7Q5 | 1854-0071 | 7 | | TRANSISTOR NPN SI PD=300MW FT=200MHZ | 28480 | 1854-0071 |
| A7Q6 | 1853-0010 | 2 | | TRANSISTOR PNP SI TO-18 PD=360MW | 28480 | 1853-0010 |
| A7Q7 | 1854-0071 | 7 | | TRANSISTOR NPN SI PD=300MW FT=200MHZ | 28480 | 1854-0071 |
| A7Q8 | 1853-0010 | 2 | | TRANSISTOR PNP SI TO-18 PD=360MW | 28480 | 1853-0010 |
| A7Q9 | 1853-0010 | 2 | | TRANSISTOR PNP SI TO-18 PD=360MW | 28480 | 1853-0010 |
| A7Q11 | 1854-0071 | 7 | | TRANSISTOR NPN SI PD=300MW FT=200MHZ | 28480 | 1854-0071 |

See introduction to this section for ordering information
*Indicates factory selected value

Replaceable Parts

## Table 6-3. Replaceable Parts (Cont'd).

| Reference Designation | HP Part Number | C D | Qty | Description | Mfr Code | Mfr Part Number |
|---|---|---|---|---|---|---|
| A7Q12 | 1854-0071 | 7 | | TRANSISTOR NPN SI PD=300MW FT=200MHZ | 28480 | 1854-0071 |
| A7Q13 | 1853-0012 | 4 | 1 | TRANSISTOR PNP 2N2904A SI TO-39 PD=600MW | 01295 | 2N2904A |
| A7Q14 | 1854-0039 | 7 | 1 | TRANSISTOR NPN 2N30538 SI TO-39 PD=1W | 01928 | 2N30538 |
| A7R1 | 0684-1031 | 9 | | RESISTOR 10K 10% .25W FC TC=-400/+700 | 01121 | CB1031 |
| A7R2 | 0684-3931 | 2 | 7 | RESISTOR 39K 10% .25W FC TC=-400/+800 | 01121 | CB3931 |
| A7R3 | 0757-0465 | 6 | | RESISTOR 100K 1% .125W F TC=0+-100 | 24546 | C4-1/8-T0-1003-F |
| A7R4 | 0698-0077 | 0 | | RESISTOR 93.1K 1% .125W F TC=0+-100 | 03888 | PME55-1/8-T0-9312-F |
| A7R5 | 0698-3228 | 9 | | RESISTOR 49.9K 1% .125W F TC=0+-100 | 28480 | 0698-3228 |
| A7R6 | 0698-0077 | 0 | | RESISTOR 93.1K 1% .125W F TC=0+-100 | 03888 | PME55-1/8-T0-9312-F |
| A7R7 | 0698-3228 | 9 | | RESISTOR 49.9K 1% .125W F TC=0+-100 | 28480 | 0698-3228 |
| A7R8 | 0698-5575 | 3 | 6 | RESISTOR 100K .5% .125W F TC=0+-100 | 24546 | C4-1/8-T0-1003-D |
| A7R9 | 0698-3228 | 9 | | RESISTOR 49.9K 1% .125W F TC=0+-100 | 28480 | 0698-3228 |
| A7R10 | 0684-1031 | 9 | | RESISTOR 10K 10% .25W FC TC=-400/+700 | 01121 | CB1031 |
| A7R11 | 0698-5575 | 3 | | RESISTOR 100K .5% .125W F TC=0+-100 | 24546 | C4-1/8-T0-1003-D |
| A7R12 | 0698-5573 | 1 | 6 | RESISTOR 50K .5% .125W F TC=0+-100 | 24546 | C4-1/8-T0-5002-D |
| A7R13 | 0698-3445 | 2 | 6 | RESISTOR 348 1% .125W F TC=0+-100 | 24546 | C4-1/8-T0-348R-F |
| A7R14 | 0811-1794 | 2 | 7 | RESISTOR 99.25K .1% .05W PWW TC=0+-10 | 20940 | 140-1/40-D-99251-B |
| A7R15 | 0698-5573 | 1 | | RESISTOR 50K .5% .125W F TC=0+-100 | 24546 | C4-1/8-T0-5002-D |
| A7R16 | 0698-3445 | 2 | | RESISTOR 348 1% .125W F TC=0+-100 | 24546 | C4-1/8-T0-348R-F |
| A7R17 | 0811-1794 | 2 | | RESISTOR 99.25K .1% .05W PWW TC=0+-10 | 20940 | 140-1/40-D-99251-B |
| A7R18 | 0698-7973 | 9 | 8 | RESISTOR 50K .05% .125W F TC=0+-25 | 19701 | MF4C1/8-T9-5002-D |
| A7R19 | 0698-4158 | 6 | 5 | RESISTOR 100K .1% .125W F TC=0+-50 | 28480 | 0698-4158 |
| A7R21 | 0698-7973 | 9 | | RESISTOR 50K .05% .125W F TC=0+-25 | 19701 | MF4C1/8-T9-5002-D |
| A7R22 | 0698-4158 | 6 | | RESISTOR 100K .1% .125W F TC=0+-50 | 28480 | 0698-4158 |
| A7R23 | 0684-3931 | 2 | | RESISTOR 39K 10% .25W FC TC=-400/+800 | 01121 | CB3931 |
| A7R24 | 0684-3931 | 2 | | RESISTOR 39K 10% .25W FC TC=-400/+800 | 01121 | CB3931 |
| A7R25 | 0684-3931 | 2 | | RESISTOR 39K 10% .25W FC TC=-400/+800 | 01121 | CB3931 |
| A7R26 | 0684-3931 | 2 | | RESISTOR 39K 10% .25W FC TC=-400/+800 | 01121 | CB3931 |
| A7R27 | 0698-3268 | 7 | | RESISTOR 11.5K 1% .125W F TC=0+-100 | 24546 | C4-1/8-T0-1152-F |
| A7R28 | 0757-0442 | 9 | | RESISTOR 10K 1% .125W F TC=0+-100 | 24546 | C4-1/8-T0-1002-F |
| A7R29 | 0684-5621 | 1 | | RESISTOR 5.6K 10% .25W FC TC=-400/+700 | 01121 | CB5621 |
| A7R31 | 0757-0280 | 3 | | RESISTOR 1K 1% .125W F TC=0+-100 | 24546 | C4-1/8-T0-1001-F |
| A7R32 | 0698-4469 | 2 | 4 | RESISTOR 1.15K 1% .125W F TC=0+-100 | 24546 | C4-1/8-T0-1151-F |
| A7R33 | 0698-3268 | 7 | | RESISTOR 11.5K 1% .125W F TC=0+-100 | 24546 | C4-1/8-T0-1152-F |
| A7R34 | 0757-0442 | 9 | | RESISTOR 10K 1% .125W F TC=0+-100 | 24546 | C4-1/8-T0-1002-F |
| A7R35 | 0684-5621 | 1 | | RESISTOR 5.6K 10% .25W FC TC=-400/+700 | 01121 | CB5621 |
| A7R36 | 0757-0280 | 3 | | RESISTOR 1K 1% .125W F TC=0+-100 | 24546 | C4-1/8-T0-1001-F |
| A7R37 | 0698-4469 | 2 | | RESISTOR 1.15K 1% .125W F TC=0+-100 | 24546 | C4-1/8-T0-1151-F |
| A7R38 | 0698-3268 | 7 | | RESISTOR 11.5K 1% .125W F TC=0+-100 | 24546 | C4-1/8-T0-1152-F |
| A7R39 | 0757-0442 | 9 | | RESISTOR 10K 1% .125W F TC=0+-100 | 24546 | C4-1/8-T0-1002-F |
| A7R41 | 0684-5621 | 1 | | RESISTOR 5.6K 10% .25W FC TC=-400/+700 | 01121 | CB5621 |
| A7R42 | 0757-0280 | 3 | | RESISTOR 1K 1% .125W F TC=0+-100 | 24546 | C4-1/8-T0-1001-F |
| A7R43 | 0698-4469 | 2 | | RESISTOR 1.15K 1% .125W F TC=0+-100 | 24546 | C4-1/8-T0-1151-F |
| A7R44 | 0698-3268 | 7 | | RESISTOR 11.5K 1% .125W F TC=0+-100 | 24546 | C4-1/8-T0-1152-F |
| A7R45 | 0757-0442 | 9 | | RESISTOR 10K 1% .125W F TC=0+-100 | 24546 | C4-1/8-T0-1002-F |
| A7R46 | 0684-5621 | 1 | | RESISTOR 5.6K 10% .25W FC TC=-400/+700 | 01121 | CB5621 |
| A7R47 | 0757-0280 | 3 | | RESISTOR 1K 1% .125W F TC=0+-100 | 24546 | C4-1/8-T0-1001-F |
| A7R48 | 0698-4469 | 2 | | RESISTOR 1.15K 1% .125W F TC=0+-100 | 24546 | C4-1/8-T0-1151-F |
| A7R49 | 0757-0464 | 5 | 1 | RESISTOR 90.9K 1% .125W F TC=0+-100 | 24546 | C4-1/8-T0-9092-F |
| A7R51 | 0698-3228 | 9 | | RESISTOR 49.9K 1% .125W F TC=0+-100 | 28480 | 0698-3228 |
| A7R52 | 0757-0978 | 6 | 4 | RESISTOR 95.3K 1% .125W F TC=0+-100 | 24546 | C4-1/8-T0-9532-F |
| A7R53 | 0698-3228 | 9 | | RESISTOR 49.9K 1% .125W F TC=0+-100 | 28480 | 0698-3228 |
| A7R54 | 0757-0978 | 6 | | RESISTOR 95.3K 1% .125W F TC=0+-100 | 24546 | C4-1/8-T0-9532-F |
| A7R55 | 0698-3228 | 9 | | RESISTOR 49.9K 1% .125W F TC=0+-100 | 28480 | 0698-3228 |
| A7R56 | 0698-5575 | 3 | | RESISTOR 100K .5% .125W F TC=0+-100 | 24546 | C4-1/8-T0-1003-D |
| A7R57 | 0698-5573 | 1 | | RESISTOR 50K .5% .125W F TC=0+-100 | 24546 | C4-1/8-T0-5002-D |
| A7R58 | 0698-5575 | 3 | | RESISTOR 100K .5% .125W F TC=0+-100 | 24546 | C4-1/8-T0-1003-D |
| A7R59 | 0698-5573 | 1 | | RESISTOR 50K .5% .125W F TC=0+-100 | 24546 | C4-1/8-T0-5002-D |
| A7R61 | 0698-3445 | 2 | | RESISTOR 348 1% .125W F TC=0+-100 | 24546 | C4-1/8-T0-348R-F |
| A7R62 | 0811-1794 | 2 | | RESISTOR 99.25K .1% .05W PWW TC=0+-10 | 20940 | 140-1/40-D-99251-B |
| A7R63 | 0698-7973 | 9 | | RESISTOR 50K .05% .125W F TC=0+-25 | 19701 | MF4C1/8-T9-5002-D |
| A7R64 | 0698-3445 | 2 | | RESISTOR 348 1% .125W F TC=0+-100 | 24546 | C4-1/8-T0-348R-F |
| A7R65 | 0811-1794 | 2 | | RESISTOR 99.25K .1% .05W PWW TC=0+-10 | 20940 | 140-1/40-D-99251-B |
| A7R66 | 0698-7973 | 9 | | RESISTOR 50K .05% .125W F TC=0+-25 | 19701 | MF4C1/8-T9-5002-D |
| A7R67 | 0698-4158 | 6 | | RESISTOR 100K .1% .125W F TC=0+-50 | 28480 | 0698-4158 |
| A7R68 | 0698-7973 | 9 | | RESISTOR 50K .05% .125W F TC=0+-25 | 19701 | MF4C1/8-T9-5002-D |
| A7R69 | 0698-7975 | 1 | 2 | RESISTOR 100K .05% .125W F TC=0+-25 | 19701 | MF4C1/8-T9-1003-D |
| A7R71 | 0698-7973 | 9 | | RESISTOR 50K .05% .125W F TC=0+-25 | 19701 | MF4C1/8-T9-5002-D |
| A7R72 | 0698-7975 | 1 | | RESISTOR 100K .05% .125W F TC=0+-25 | 19701 | MF4C1/8-T9-1003-D |
| A7R73 | 0811-1794 | 2 | | RESISTOR 99.25K .1% .05W PWW TC=0+-10 | 20940 | 140-1/40-D-99251-B |
| A7R74 | 0698-4456 | 7 | 1 | RESISTOR 549 1% .125W F TC=0+-100 | 24546 | C4-1/8-T0-549R-F |
| A7R75 | 0757-0449 | 6 | | RESISTOR 20K 1% .125W F TC=0+-100 | 24546 | C4-1/8-T0-2002-F |
| A7R76 | 0757-0449 | 6 | | RESISTOR 20K 1% .125W F TC=0+-100 | 24546 | C4-1/8-T0-2002-F |
| A7R77 | 0757-0449 | 6 | | RESISTOR 20K 1% .125W F TC=0+-100 | 24546 | C4-1/8-T0-2002-F |
| A7R78 | 0757-0449 | 6 | | RESISTOR 20K 1% .125W F TC=0+-100 | 24546 | C4-1/8-T0-2002-F |
| A7R79 | 0757-0449 | 6 | | RESISTOR 20K 1% .125W F TC=0+-100 | 24546 | C4-1/8-T0-2002-F |
| A7R81 | 0757-0449 | 6 | | RESISTOR 20K 1% .125W F TC=0+-100 | 24546 | C4-1/8-T0-2002-F |
| A7R82 | 0757-0449 | 6 | | RESISTOR 20K 1% .125W F TC=0+-100 | 24546 | C4-1/8-T0-2002-F |

See introduction to this section for ordering information
*Indicates factory selected value

## Table 6-3. Replaceable Parts (Cont'd).

| Reference Designation | HP Part Number | C D | Qty | Description | Mfr Code | Mfr Part Number |
|---|---|---|---|---|---|---|
| A7R83 | 0757-0449 | 6 | | RESISTOR 20K 1% .125W F TC=0+-100 | 24546 | C4-1/8-T0-2002-F |
| A7R84 | 0757-0449 | 6 | | RESISTOR 20K 1% .125W F TC=0+-100 | 24546 | C4-1/8-T0-2002-F |
| A7R85 | 0757-0449 | 6 | | RESISTOR 20K 1% .125W F TC=0+-100 | 24546 | C4-1/8-T0-2002-F |
| A7R86 | 0757-0449 | 6 | | RESISTOR 20K 1% .125W F TC=0+-100 | 24546 | C4-1/8-T0-2002-F |
| A7R87 | 0757-0449 | 6 | | RESISTOR 20K 1% .125W F TC=0+-100 | 24546 | C4-1/8-T0-2002-F |
| A7R88 | 0757-0449 | 6 | | RESISTOR 20K 1% .125W F TC=0+-100 | 24546 | C4-1/8-T0-2002-F |
| A7R89 | 0757-0449 | 6 | | RESISTOR 20K 1% .125W F TC=0+-100 | 24546 | C4-1/8-T0-2002-F |
| A7R91 | 0757-0449 | 6 | | RESISTOR 20K 1% .125W F TC=0+-100 | 24546 | C4-1/8-T0-2002-F |
| A7R92 | 0757-0449 | 6 | | RESISTOR 20K 1% .125W F TC=0+-100 | 24546 | C4-1/8-T0-2002-F |
| A7R93 | 0757-0449 | 6 | | RESISTOR 20K 1% .125W F TC=0+-100 | 24546 | C4-1/8-T0-2002-F |
| A7R94 | 0757-0449 | 6 | | RESISTOR 20K 1% .125W F TC=0+-100 | 24546 | C4-1/8-T0-2002-F |
| A7R95 | 0757-0449 | 6 | | RESISTOR 20K 1% .125W F TC=0+-100 | 24546 | C4-1/8-T0-2002-F |
| A7R96 | 0757-0449 | 6 | | RESISTOR 20K 1% .125W F TC=0+-100 | 24546 | C4-1/8-T0-2002-F |
| A7R97 | 0684-5621 | 1 | | RESISTOR 5.6K 10% .25W FC TC=-400/+700 | 01121 | CB5621 |
| A7R98 | 0684-5621 | 1 | | RESISTOR 5.6K 10% .25W FC TC=-400/+700 | 01121 | CB5621 |
| A7R99 | 0684-5621 | 1 | | RESISTOR 5.6K 10% .25W FC TC=-400/+700 | 01121 | CB5621 |
| A7R101 | 0684-5621 | 1 | | RESISTOR 5.6K 10% .25W FC TC=-400/+700 | 01121 | CB5621 |
| A7R102 | 0757-0438 | 3 | | RESISTOR 5.11K 1% .125W F TC=0+-100 | 24546 | C4-1/8-T0-5111-F |
| A7R103 | 0757-0438 | 3 | | RESISTOR 5.11K 1% .125W F TC=0+-100 | 24546 | C4-1/8-T0-5111-F |
| A7R104 | 0757-0442 | 9 | | RESISTOR 10K 1% .125W F TC=0+-100 | 24546 | C4-1/8-T0-1002-F |
| A7R105 | 0684-3931 | 2 | | RESISTOR 39K 10% .25W FC TC=-400/+800 | 01121 | CB3931 |
| A7R106 | 0684-1031 | 9 | | RESISTOR 10K 10% .25W FC TC=-400/+700 | 01121 | CB1031 |
| A7R107 | 0684-3931 | 2 | | RESISTOR 39K 10% .25W FC TC=-400/+800 | 01121 | CB3931 |
| A7R108 | 0684-1031 | 9 | | RESISTOR 10K 10% .25W FC TC=-400/+700 | 01121 | CB1031 |
| A7R109* | 0698-3160 | 8 | 1 | RESISTOR 31.6K 1% .125W F TC=0+-100 | 24546 | C4-1/8-T0-3162-F |
| A7R111* | 0698-4090 | 9 | 1 | RESISTOR 29.4K 1% .125W F TC=0+-100 | 24546 | C4-1/8-T0-2942-F |
| A7R112 | 0698-3228 | 9 | | RESISTOR 49.9K 1% .125W F TC=0+-100 | 28480 | 0698-3228 |
| A7R113 | 0757-0438 | 3 | | RESISTOR 5.11K 1% .125W F TC=0+-100 | 24546 | C4-1/8-T0-5111-F |
| A7R114 | 0698-3498 | 5 | 1 | RESISTOR 8.66K 1% .125W F TC=0+-100 | 24546 | C4-1/8-T0-866R-F |
| A7R115 | 0757-0438 | 3 | | RESISTOR 5.11K 1% .125W F TC=0+-100 | 24546 | C4-1/8-T0-5111-F |
| A7R116 | 0757-0978 | 6 | | RESISTOR 95.3K 1% .125W F TC=0+-100 | 24546 | C4-1/8-T0-9532-F |
| A7R117 | 0757-0465 | 6 | | RESISTOR 100K 1% .125W F TC=0+-100 | 24546 | C4-1/8-T0-1003-F |
| A7R118 | 0698-3228 | 9 | | RESISTOR 49.9K 1% .125W F TC=0+-100 | 28480 | 0698-3228 |
| A7R119 | 0757-0978 | 6 | | RESISTOR 95.3K 1% .125W F TC=0+-100 | 24546 | C4-1/8-T0-9532-F |
| A7R121 | 0698-3228 | 9 | | RESISTOR 49.9K 1% .125W F TC=0+-100 | 28480 | 0698-3228 |
| A7R122 | 0698-5575 | 3 | | RESISTOR 100K .5% .125W F TC=0+-100 | 24546 | C4-1/8-T0-1003-D |
| A7R123 | 0698-3228 | 9 | | RESISTOR 49.9K 1% .125W F TC=0+-100 | 28480 | 0698-3228 |
| A7R124 | 0698-5575 | 3 | | RESISTOR 100K .5% .125W F TC=0+-100 | 24546 | C4-1/8-T0-1003-D |
| A7R125 | 0698-5573 | 1 | | RESISTOR 50K .5% .125W F TC=0+-100 | 24546 | C4-1/8-T0-5002-D |
| A7R126 | 0811-1794 | 2 | | RESISTOR 99.25K .1% .05W PWW TC=0+-10 | 20940 | 140-1/40-D-99251-B |
| A7R127 | 0698-3445 | 2 | | RESISTOR 348 1% .125W F TC=0+-100 | 24546 | C4-1/8-T0-348R-F |
| A7R128 | 0811-1794 | 2 | | RESISTOR 99.25K .1% .05W PWW TC=0+-10 | 20940 | 140-1/40-D-99251-B |
| A7R129 | 0698-3445 | 2 | | RESISTOR 348 1% .125W F TC=0+-100 | 24546 | C4-1/8-T0-348R-F |
| A7R131 | 0698-5573 | 1 | | RESISTOR 50K .5% .125W F TC=0+-100 | 24546 | C4-1/8-T0-5002-D |
| A7R132 | 0698-7973 | 9 | | RESISTOR 50K .05% .125W F TC=0+-25 | 19701 | MF4C1/8-T9-5002-D |
| A7R133 | 0698-4158 | 6 | | RESISTOR 100K .1% .125W F TC=0+-50 | 28480 | 0698-4158 |
| A7R134 | 0698-7973 | 9 | | RESISTOR 50K .05% .125W F TC=0+-25 | 19701 | MF4C1/8-T9-5002-D |
| A7R135 | 0698-4158 | 6 | | RESISTOR 100K .1% .125W F TC=0+-50 | 28480 | 0698-4158 |
| A7R136 | 0687-3301 | 6 | 2 | RESISTOR 33 10% .5W CC TC=0+412 | 01121 | EB3301 |
| A7R137 | 0687-3301 | 6 | | RESISTOR 33 10% .5W CC TC=0+412 | 01121 | EB3301 |
| A7R138 | 0698-3193 | 7 | | RESISTOR 10K .25% .125W F TC=0+-50 | 28480 | 0698-3193 |
| A7R139 | 0698-3193 | 7 | | RESISTOR 10K .25% .125W F TC=0+-50 | 28480 | 0698-3193 |
| A7R140 | 0684-1031 | 9 | | RESISTOR 10K 10% .25W FC TC=-400/+700 | 01121 | CB1031 |
| A7U1 | 1826-0026 | 3 | 2 | IC COMPARATOR PRCN TO-99 | 01295 | LM311L |
| A7U2 | 1820-0939 | 5 | 3 | IC FF CMOS D-TYPE POS-EDGE-TRIG DUAL | 01928 | CD4013AF |
| A7U3 | 1820-0949 | 7 | 4 | IC GATE CMOS NAND QUAD 2-INP | 01928 | CD4011AF |
| A7U4 | 1820-0943 | 1 | 2 | IC GATE CMOS NAND TPL 3-INP | 01928 | CD4023AF |
| A7U5 | 1820-1114 | 0 | 6 | IC CNTR CMOS BIN SYNCHRO POS-EDGE-TRIG | 04713 | MC14516BCP |
| A7U6 | 1820-1114 | 0 | | IC CNTR CMOS BIN SYNCHRO POS-EDGE-TRIG | 04713 | MC14516BCP |
| A7U7 | 1820-093A | 4 | 3 | IC FF CMOS J-K M/S POS-EDGE-TRIG DUAL | 01928 | CD4027AE |
| A7U8 | 1820-0943 | 1 | | IC GATE CMOS NAND TPL 3-INP | 01928 | CD4023AF |
| A7U9 | 1820-0949 | 7 | | IC GATE CMOS NAND QUAD 2-INP | 01928 | CD4011AF |
| A7U11 | 1820-0928 | 2 | 3 | IC BFR CMOS QUAD | 01928 | CD4041AE |
| A7U12 | 1820-1145 | 7 | 1 | IC BFR CMOS INV HEX 1-INP | 01928 | CD4049AF |
| A7U13 | 1820-0949 | 7 | | IC GATE CMOS NAND QUAD 2-INP | 01928 | CD4011AF |
| A7U14 | 1820-0203 | 6 | 5 | IC OP AMP GP TO-99 | 01928 | CA741CT |
| A7U15 | 1820-1601 | 0 | 1 | IC GATE CMOS EXCL-OR QUAD 2-INP | 01928 | CD4070BE |
| A7U16 | 1820-0938 | 4 | | IC FF CMOS J-K M/S POS-EDGE-TRIG DUAL | 01928 | CD4027AE |
| A7U17 | 1820-0946 | 4 | 2 | IC GATE CMOS NOR QUAD 2-INP | 01928 | CD4001AF |
| A7U18 | 1826-0021 | 8 | 12 | IC OP AMP GP TO-99 | 27014 | LM310H |
| A7U19 | 1826-0026 | 3 | | IC COMPARATOR PRCN TO-99 | 01295 | LM311L |
| A7U21 | 1826-0021 | 8 | | IC OP AMP GP TO-99 | 27014 | LM310H |
| A7U22 | 1820-0951 | 1 | 7 | IC MUXR/DATA-SEL CMOS 2-TO-1-LINE QUAD | 01928 | CD4019AF |
| A7U23 | 1820-0946 | 4 | | IC GATE CMOS NOR QUAD 2-INP | 01928 | CD4001AF |
| A7U24 | 1820-0938 | 4 | | IC FF CMOS J-K M/S POS-EDGE-TRIG DUAL | 01928 | CD4027AE |
| A7U25 | 1820-0951 | 1 | | IC MUXR/DATA-SEL CMOS 2-TO-1-LINE QUAD | 01928 | CD4019AF |
| A7U26 | 1820-0951 | 1 | | IC MUXR/DATA-SEL CMOS 2-TO-1-LINE QUAD | 01928 | CD4019AF |
| A7U27 | 1820-0203 | 6 | | IC OP AMP GP TO-99 | 01928 | CA741CT |

See introduction to this section for ordering information
*Indicates factory selected value

Replaceable Parts

## Table 6-3. Replaceable Parts (Cont'd).

| Reference Designation | HP Part Number | C D | Qty | Description | Mfr Code | Mfr Part Number |
|---|---|---|---|---|---|---|
| A7U28 | 1820-1114 | 0 | | IC CNTR CMOS BIN SYNCHRO POS-EDGE-TRIG | 04713 | MC14516BCP |
| A7U29 | 1820-1114 | 0 | | IC CNTR CMOS BIN SYNCHRO POS-EDGE-TRIG | 04713 | MC14516BCP |
| A7U31 | 1820-0958 | 8 | 2 | IC LCH CMOS D-TYPE QUAD | 01928 | CD4042AF |
| A7U32 | 1820-0926 | 0 | 2 | IC ADDR CMOS FULL ADDER 4-BIT | 01928 | CD4008AF |
| A7U33 | 1820-0958 | 8 | | IC LCH CMOS D-TYPE QUAD | 01928 | CD4042AF |
| A7U34 | 1820-0926 | 0 | | IC ADDR CMOS FULL ADDER 4-BIT | 01928 | CD4008AF |
| A7U35 | 1820-1078 | 5 | 8 | IC NMOS 1K RAM STAT 1-US 3-S | 28480 | 1820-1078 |
| A7U36 | 1820-1078 | 5 | | IC NMOS 1K RAM STAT 1-US 3-S | 28480 | 1820-1078 |
| A7U37 | 1820-1078 | 5 | | IC NMOS 1K RAM STAT 1-US 3-S | 28480 | 1820-1078 |
| A7U38 | 1820-1078 | 5 | | IC NMOS 1K RAM STAT 1-US 3-S | 28480 | 1820-1078 |
| A7U39 | 1820-1078 | 5 | | IC NMOS 1K RAM STAT 1-US 3-S | 28480 | 1820-1078 |
| A7U41 | 1820-1078 | 5 | | IC NMOS 1K RAM STAT 1-US 3-S | 28480 | 1820-1078 |
| A7U42 | 1820-1078 | 5 | | IC NMOS 1K RAM STAT 1-US 3-S | 28480 | 1820-1078 |
| A7U43 | 1820-1078 | 5 | | IC NMOS 1K RAM STAT 1-US 3-S | 28480 | 1820-1078 |
| A7U44 | 1826-0021 | 8 | | IC OP AMP GP TO-99 | 27014 | LM310H |
| A7U45 | 1826-0021 | 8 | | IC OP AMP GP TO-99 | 27014 | LM310H |
| A7U46 | 1826-0021 | 8 | | IC OP AMP GP TO-99 | 27014 | LM310H |
| A7U47 | 1826-0021 | 8 | | IC OP AMP GP TO-99 | 27014 | LM310H |
| A7U48 | 1820-0939 | 5 | | IC FF CMOS D-TYPE POS-EDGE-TRIG DUAL | 01928 | CD4013AF |
| A7U49 | 1820-0951 | 1 | | IC MUXR/DATA-SEL CMOS 2-TO-1-LINE QUAD | 01928 | CD4019AF |
| A7U51 | 1820-0951 | 1 | | IC MUXR/DATA-SEL CMOS 2-TO-1-LINE QUAD | 01928 | CD4019AF |
| A7U52 | 1820-0951 | 1 | | IC MUXR/DATA-SEL CMOS 2-TO-1-LINE QUAD | 01928 | CD4019AF |
| A7U53 | 1826-0021 | 8 | | IC OP AMP GP TO-99 | 27014 | LM310H |
| A7U54 | 1820-0949 | 7 | | IC GATE CMOS NAND QUAD 2-INP | 01928 | CD4011AF |
| A7U55 | 1820-0939 | 5 | | IC FF CMOS D-TYPE POS-EDGE-TRIG DUAL | 01928 | CD4013AF |
| A7U56 | 1820-1114 | 0 | | IC CNTR CMOS BIN SYNCHRO POS-EDGE-TRIG | 04713 | MC14516BCP |
| A7U57 | 1820-1114 | 0 | | IC CNTR CMOS BIN SYNCHRO POS-EDGE-TRIG | 04713 | MC14516BCP |
| A7U58 | 1820-0951 | 1 | | IC MUXR/DATA-SEL CMOS 2-TO-1-LINE QUAD | 01928 | CD4019AF |
| A7U59 | 1820-0730 | 4 | 1 | IC MV TTL L MONOSTBL RETRIG/RESET DUAL | 07263 | 96L02DC |
| A7U61 | 1826-0021 | 8 | | IC OP AMP GP TO-99 | 27014 | LM310H |
| A7U62 | 1826-0021 | 8 | | IC OP AMP GP TO-99 | 27014 | LM310H |
| A7U63 | 1820-0928 | 2 | | IC BFR CMOS QUAD | 01928 | CD4041AE |
| A7U64 | 1820-0928 | 2 | | IC BFR CMOS QUAD | 01928 | CD4041AE |
| A7U65 | 1820-0203 | 6 | | IC OP AMP GP TO-99 | 01928 | CA741CT |
| A8 | 03580-66508 | 4 | 1 | BOARD ASSEMBLY-CONTROL | 28480 | 03580-66508 |
| A8C1 | 0121-0426 | 2 | | CAPACITOR-V TRMR-MICA 50-380PF 175V | 72136 | T52517-7 |
| A8C2 | 0160-2940 | 1 | 1 | CAPACITOR-FXD 470PF +-5% 300VDC MICA | 28480 | 0160-2940 |
| A8C3 | 0150-0093 | 0 | | CAPACITOR-FXD .01UF +80-20% 100VDC CER | 28480 | 0150-0093 |
| A8C4 | 0160-0945 | 2 | 2 | CAPACITOR-FXD 910PF +-5% 100VDC MICA | 28480 | 0160-0945 |
| A8C5 | 0160-0945 | 2 | | CAPACITOR-FXD 910PF +-5% 100VDC MICA | 28480 | 0160-0945 |
| A8C6 | 0160-0363 | 8 | | CAPACITOR-FXD 620PF +-5% 300VDC MICA | 28480 | 0160-0363 |
| A8C7 | 0150-0093 | 0 | | CAPACITOR-FXD .01UF +80-20% 100VDC CER | 28480 | 0150-0093 |
| A8C8 | 0140-0206 | 6 | | CAPACITOR-FXD 270PF +-5% 500VDC MICA | 72136 | DM19F271J0500HV1CR |
| A8C9 | 0150-0084 | 9 | | CAPACITOR-FXD .1UF +80-20% 100VDC CER | 28480 | 0150-0084 |
| A8C11 | 0160-4870 | 0 | 1 | | 28480 | 0160-4870 |
| A8C12 | 0150-0093 | 0 | | CAPACITOR-FXD .01UF +80-20% 100VDC CER | 28480 | 0150-0093 |
| A8C13 | 0160-0161 | 4 | | CAPACITOR-FXD .01UF +-10% 200VDC POLYE | 28480 | 0160-0161 |
| A8C14 | 0160-0363 | 8 | | CAPACITOR-FXD 620PF +-5% 300VDC MICA | 28480 | 0160-0363 |
| A8C15 | 0170-0055 | 6 | 1 | CAPACITOR-FXD .1UF +-20% 200VDC POLYE | 28480 | 0170-0055 |
| A8C16 | 0150-0093 | 0 | | CAPACITOR-FXD .01UF +80-20% 100VDC CER | 28480 | 0150-0093 |
| A8C18 | 0150-0093 | 0 | | CAPACITOR-FXD .01UF +80-20% 100VDC CER | 28480 | 0150-0093 |
| A8C19 | 0160-0164 | 7 | 1 | CAPACITOR-FXD .039UF +-10% 200VDC POLYE | 28480 | 0160-0164 |
| A8C21 | 0180-0374 | 3 | 3 | CAPACITOR-FXD 10UF+-10% 20VDC TA | 56289 | 150D106X9020B2 |
| A8C22 | 0160-0166 | 9 | 1 | CAPACITOR-FXD .068UF +-10% 200VDC POLYE | 28480 | 0160-0166 |
| A8C23 | 0160-2960 | 5 | | CAPACITOR-FXD .05UF +-20% 100VDC CER | 28480 | 0160-2960 |
| A8C24 | 0180-0376 | 5 | 1 | CAPACITOR-FXD .47UF+-10% 35VDC TA | 56289 | 150D474X9035A2 |
| A8C25 | 0180-0197 | 8 | | CAPACITOR-FXD 2.2UF+-10% 20VDC TA | 56289 | 150D225X9020A2 |
| A8C26 | 0150-0122 | 6 | 2 | CAPACITOR-FXD 2000PF +-20% 500VDC CER | 28480 | 0150-0122 |
| A8C27 | 0150-0122 | 6 | | CAPACITOR-FXD 2000PF +-20% 500VDC CER | 28480 | 0150-0122 |
| A8C28 | 0180-1746 | 5 | | CAPACITOR-FXD 15UF+-10% 20VDC TA | 56289 | 150D156X9020B2 |
| A8C29 | 0180-1746 | 5 | | CAPACITOR-FXD 15UF+-10% 20VDC TA | 56289 | 150D156X9020B2 |
| A8C31 | 0180-0141 | 2 | 1 | CAPACITOR-FXD 50UF+75-10% 50VDC AL | 56289 | 30D506G050DD2 |
| A8C32 | 0180-1746 | 5 | | CAPACITOR-FXD 15UF+-10% 20VDC TA | 56289 | 150D156X9020B2 |
| A8C33 | 0180-1746 | 5 | | CAPACITOR-FXD 15UF+-10% 20VDC TA | 56289 | 150D156X9020B2 |
| A8CR1 | 1901-0040 | 1 | | DIODE-SWITCHING 30V 50MA 2NS DO-35 | 28480 | 1901-0040 |
| A8CR2 | 1901-0040 | 1 | | DIODE-SWITCHING 30V 50MA 2NS DO-35 | 28480 | 1901-0040 |
| A8CR3 | 1901-0040 | 1 | | DIODE-SWITCHING 30V 50MA 2NS DO-35 | 28480 | 1901-0040 |
| A8CR4 | 1901-0040 | 1 | | DIODE-SWITCHING 30V 50MA 2NS DO-35 | 28480 | 1901-0040 |
| A8CR5 | 1902-0041 | 4 | | DIODE-ZNR 5.11V 5% DO-35 PD=.4W | 28480 | 1902-0041 |
| A8CR6 | 1901-0040 | 1 | | DIODE-SWITCHING 30V 50MA 2NS DO-35 | 28480 | 1901-0040 |
| A8CR7 | 1902-3182 | 0 | | DIODE-ZNR 12.1V 5% DO-35 PD=.4W | 28480 | 1902-3182 |
| A8CR8 | 1901-0040 | 1 | | DIODE-SWITCHING 30V 50MA 2NS DO-35 | 28480 | 1901-0040 |
| A8CR9 | 1901-0040 | 1 | | DIODE-SWITCHING 30V 50MA 2NS DO-35 | 28480 | 1901-0040 |
| A8CR11 | 1901-0040 | 1 | | DIODE-SWITCHING 30V 50MA 2NS DO-35 | 28480 | 1901-0040 |

See introduction to this section for ordering information
*Indicates factory selected value

Replaceable Parts

## Table 6-3. Replaceable Parts (Cont'd).

| Reference Designation | HP Part Number | C D | Qty | Description | Mfr Code | Mfr Part Number |
|---|---|---|---|---|---|---|
| A8CR12 | 1901-0040 | 1 | | DIODE-SWITCHING 30V 50MA 2NS DO-35 | 28480 | 1901-0040 |
| A8CR13 | 1902-3311 | 7 | 2 | DIODE-ZNR 38.3V 5% DO-35 PD=.4W | 28480 | 1902-3311 |
| A8CR14 | 1902-3311 | 7 | | DIODE-ZNR 38.3V 5% DO-35 PD=.4W | 28480 | 1902-3311 |
| A8CR15 | 1901-0033 | 2 | 5 | DIODE-GEN PRP 180V 200MA DO-7 | 28480 | 1901-0033 |
| A8CR16 | 1901-0033 | 2 | | DIODE-GEN PRP 180V 200MA DO-7 | 28480 | 1901-0033 |
| A8CR17 | 1901-0033 | 2 | | DIODE-GEN PRP 180V 200MA DO-7 | 28480 | 1901-0033 |
| A8CR18 | 1901-0033 | 2 | | DIODE-GEN PRP 180V 200MA DO-7 | 28480 | 1901-0033 |
| A8CR19 | 1901-0033 | 2 | | DIODE-GEN PRP 180V 200MA DO-7 | 28480 | 1901-0033 |
| A8CR21 | 1901-0050 | 3 | 1 | DIODE-SWITCHING 80V 200MA 2NS DO-35 | 28480 | 1901-0050 |
| A8CR22 | 1901-0040 | 1 | | DIODE-SWITCHING 30V 50MA 2NS DO-35 | 28480 | 1901-0040 |
| A8CR23 | 1901-0040 | 1 | | DIODE-SWITCHING 30V 50MA 2NS DO-35 | 28480 | 1901-0040 |
| A8L1 | 9140-0129 | 1 | | INDUCTORRF-CH-MLD 220UH 5% .166DX.385LG | 28480 | 9140-0129 |
| A8L2 | 9140-0129 | 1 | | INDUCTORRF-CH-MLD 220UH 5% .166DX.385LG | 28480 | 9140-0129 |
| A8L3 | 9100-3282 | 9 | 2 | INDUCTOR 200UH 20% .550DX.5LG | 28480 | 9100-3282 |
| A8L4 | 9100-3282 | 9 | | INDUCTOR 200UH 20% .550DX.5LG | 28480 | 9100-3282 |
| A8Q1 | 1854-0071 | 7 | | TRANSISTOR NPN SI PD=300MW FT=200MHZ | 28480 | 1854-0071 |
| A8Q2 | 1854-0071 | 7 | | TRANSISTOR NPN SI PD=300MW FT=200MHZ | 28480 | 1854-0071 |
| A8Q3 | 1855-0081 | 1 | | TRANSISTOR J-FET N-CHAN D-MODE SI | 01295 | 2N5245 |
| A8Q4 | 1855-0081 | 1 | | TRANSISTOR J-FET N-CHAN D-MODE SI | 01295 | 2N5245 |
| A8Q5 | 1853-0010 | 2 | | TRANSISTOR PNP SI TO-18 PD=360MW | 28480 | 1853-0010 |
| A8Q6 | 1853-0010 | 2 | | TRANSISTOR PNP SI TO-18 PD=360MW | 28480 | 1853-0010 |
| A8Q7 | 1854-0071 | 7 | | TRANSISTOR NPN SI PD=300MW FT=200MHZ | 28480 | 1854-0071 |
| A8Q8 | 1854-0071 | 7 | | TRANSISTOR NPN SI PD=300MW FT=200MHZ | 28480 | 1854-0071 |
| A8Q9 | 1853-0010 | 2 | | TRANSISTOR PNP SI TO-18 PD=360MW | 28480 | 1853-0010 |
| A8Q11 | 1854-0071 | 7 | | TRANSISTOR NPN SI PD=300MW FT=200MHZ | 28480 | 1854-0071 |
| A8Q12 | 1853-0086 | 2 | 3 | TRANSISTOR PNP SI PD=310MW FT=40MHZ | 27014 | 2N5087 |
| A8Q13 | 1854-0071 | 7 | | TRANSISTOR NPN SI PD=300MW FT=200MHZ | 28480 | 1854-0071 |
| A8Q14 | 1854-0071 | 7 | | TRANSISTOR NPN SI PD=300MW FT=200MHZ | 28480 | 1854-0071 |
| A8Q15 | 1854-0019 | 3 | 2 | TRANSISTOR NPN SI TO-18 PD=360MW | 28480 | 1854-0019 |
| A8Q16 | 1853-0016 | 8 | | TRANSISTOR PNP SI TO-92 PD=300MW | 28480 | 1853-0016 |
| A8Q17 | 1854-0019 | 3 | | TRANSISTOR NPN SI TO-18 PD=360MW | 28480 | 1854-0019 |
| A8Q18 | 1854-0232 | 2 | 1 | TRANSISTOR NPN SI TO-39 PD=1W FT=15MHZ | 28480 | 1854-0232 |
| A8Q19 | 1854-0474 | 4 | 1 | TRANSISTOR NPN SI PD=310MW FT=100MHZ | 04713 | 2N5551 |
| A8Q21 | 1854-0476 | 6 | 1 | TRANSISTOR NPN 2N3879 SI TO-66 PD=35W | 01928 | 2N3879 |
| A8Q22 | 1853-0010 | 2 | | TRANSISTOR PNP SI TO-18 PD=360MW | 28480 | 1853-0010 |
| A8Q23 | 1855-0081 | 1 | | TRANSISTOR J-FET N-CHAN D-MODE SI | 01295 | 2N5245 |
| A8R1 | 2100-3354 | 9 | | RESISTOR-TRMR 50K 10% C SIDE-ADJ 1-TRN | 28480 | 2100-3354 |
| A8R2 | 2100-3358 | 3 | 1 | RESISTOR-TRMR 1M 20% C SIDE-ADJ 1-TRN | 28480 | 2100-3358 |
| A8R3 | 2100-3357 | 2 | | RESISTOR-TRMR 500K 10% C SIDE-ADJ 1-TRN | 28480 | 2100-3357 |
| A8R4 | 2100-3353 | 8 | | RESISTOR-TRMR 20K 10% C SIDE-ADJ 1-TRN | 32997 | 3386X-X46-203 |
| A8R5 | 0684-4721 | 0 | | RESISTOR 4.7K 10% .25W FC TC=-400/+700 | 01121 | CB4721 |
| A8R6 | 0683-4715 | 0 | 3 | RESISTOR 470 5% .25W FC TC=-400/+600 | 01121 | CB4715 |
| A8R7 | 0683-1825 | 7 | 1 | RESISTOR 1.8K 5% .25W FC TC=-400/+700 | 01121 | CB1825 |
| A8R8 | 0684-2231 | 3 | | RESISTOR 22K 10% .25W FC TC=-400/+800 | 01121 | CB2231 |
| A8R9 | 0683-3325 | 6 | | RESISTOR 3.3K 5% .25W FC TC=-400/+700 | 01121 | CB3325 |
| A8R11 | 0684-2231 | 3 | | RESISTOR 22K 10% .25W FC TC=-400/+800 | 01121 | CB2231 |
| A8R12 | 0684-2231 | 3 | | RESISTOR 22K 10% .25W FC TC=-400/+800 | 01121 | CB2231 |
| A8R13 | 0698-4483 | 0 | | RESISTOR 18.7K 1% .125W F TC=0+-100 | 24546 | C4-1/8-T0-1872-F |
| A8R14 | 0698-4483 | 0 | | RESISTOR 18.7K 1% .125W F TC=0+-100 | 24546 | C4-1/8-T0-1872-F |
| A8R15 | 0757-0449 | 6 | | RESISTOR 20K 1% .125W F TC=0+-100 | 24546 | C4-1/8-T0-2002-F |
| A8R16 | 0757-0449 | 6 | | RESISTOR 20K 1% .125W F TC=0+-100 | 24546 | C4-1/8-T0-2002-F |
| A8R17 | 0757-0442 | 9 | | RESISTOR 10K 1% .125W F TC=0+-100 | 24546 | C4-1/8-T0-1002-F |
| A8R18 | 0757-0449 | 6 | | RESISTOR 20K 1% .125W F TC=0+-100 | 24546 | C4-1/8-T0-2002-F |
| A8R19 | 0757-0280 | 3 | | RESISTOR 1K 1% .125W F TC=0+-100 | 24546 | C4-1/8-T0-1001-F |
| A8R21 | 0698-4473 | 8 | | RESISTOR 8.06K 1% .125W F TC=0+-100 | 24546 | C4-1/8-T0-8061-F |
| A8R22 | 0757-0458 | 7 | | RESISTOR 51.1K 1% .125W F TC=0+-100 | 24546 | C4-1/8-T0-5112-F |
| A8R23 | 0757-0451 | 0 | 1 | RESISTOR 24.3K 1% .125W F TC=0+-100 | 24546 | C4-1/8-T0-2432-F |
| A8R24 | 0683-1555 | 0 | 1 | RESISTOR 1.5M 5% .25W FC TC=-900/+1100 | 01121 | CB1555 |
| A8R25 | 0684-1041 | 1 | | RESISTOR 100K 10% .25W FC TC=-400/+800 | 01121 | CB1041 |
| A8R26 | 0757-0458 | 7 | | RESISTOR 51.1K 1% .125W F TC=0+-100 | 24546 | C4-1/8-T0-5112-F |
| A8R27 | 0757-0458 | 7 | | RESISTOR 51.1K 1% .125W F TC=0+-100 | 24546 | C4-1/8-T0-5112-F |
| A8R28 | 0757-0472 | 5 | 1 | RESISTOR 200K 1% .125W F TC=0+-100 | 24546 | C4-1/8-T0-2003-F |
| A8R29 | 0757-0458 | 7 | | RESISTOR 51.1K 1% .125W F TC=0+-100 | 24546 | C4-1/8-T0-5112-F |
| A8R31 | 0698-4503 | 5 | 1 | RESISTOR 66.5K 1% .125W F TC=0+-100 | 24546 | C4-1/8-T0-6652-F |
| A8R32 | 0698-4526 | 2 | 1 | RESISTOR 191K 1% .125W F TC=0+-100 | 24546 | C4-1/8-T0-1913-F |
| A8R33 | 0698-4507 | 9 | 1 | RESISTOR 76.8K 1% .125W F TC=0+-100 | 24546 | C4-1/8-T0-7682-F |
| A8R34 | 0684-1041 | 1 | | RESISTOR 100K 10% .25W FC TC=-400/+800 | 01121 | CB1041 |
| A8R35 | 0684-5631 | 3 | | RESISTOR 56K 10% .25W FC TC=-400/+800 | 01121 | CB5631 |
| A8R36 | 0757-0465 | 6 | | RESISTOR 100K 1% .125W F TC=0+-100 | 24546 | C4-1/8-T0-1003-F |
| A8R38 | 0683-2225 | 3 | | RESISTOR 2.2K 5% .25W FC TC=-400/+700 | 01121 | CB2225 |
| A8R39 | 0757-0442 | 9 | | RESISTOR 10K 1% .125W F TC=0+-100 | 24546 | C4-1/8-T0-1002-F |
| A8R41 | 0757-0477 | 0 | | RESISTOR 332K 1% .125W F TC=0+-100 | 19701 | MF4C1/8-T0-3323-F |
| A8R42 | 0698-4541 | 1 | 1 | RESISTOR 442K 1% .125W F TC=0+-100 | 28480 | 0698-4541 |
| A8R43 | 0757-0483 | 8 | | RESISTOR 562K 1% .125W F TC=0+-100 | 28480 | 0757-0483 |
| A8R44 | 0684-1831 | 7 | | RESISTOR 18K 10% .25W FC TC=-400/+800 | 01121 | CB1831 |
| A8R45 | 0684-1831 | 7 | | RESISTOR 18K 10% .25W FC TC=-400/+800 | 01121 | CB1831 |

See introduction to this section for ordering information
*Indicates factory selected value

Replaceable Parts

## Table 6-3. Replaceable Parts (Cont'd).

| Reference Designation | HP Part Number | CD | Qty | Description | Mfr Code | Mfr Part Number |
|---|---|---|---|---|---|---|
| A8R46 | 0684-1831 | 7 | | RESISTOR 18K 10% .25W FC TC=-400/+800 | 01121 | CB1831 |
| A8R47 | 0684-1831 | 7 | | RESISTOR 18K 10% .25W FC TC=-400/+800 | 01121 | CB1831 |
| A8R48 | 0684-1041 | 1 | | RESISTOR 100K 10% .25W FC TC=-400/+800 | 01121 | CB1041 |
| A8R49 | 0684-5631 | 3 | | RESISTOR 56K 10% .25W FC TC=-400/+800 | 01121 | CB5631 |
| A8R50 | 0698-3161 | 9 | 2 | RESISTOR 38.3K 1% .125W F TC=0+-100 | 24546 | C4-1/8-T0-3832-F |
| A8R51 | 0684-4731 | 2 | | RESISTOR 47K 10% .25W FC TC=-400/+800 | 01121 | CB4731 |
| A8R52 | 0683-2225 | 3 | | RESISTOR 2.2K 5% .25W FC TC=-400/+700 | 01121 | CB2225 |
| A8R53 | 0684-4731 | 2 | | RESISTOR 47K 10% .25W FC TC=-400/+800 | 01121 | CB4731 |
| A8R54 | 0757-0449 | 6 | | RESISTOR 20K 1% .125W F TC=0+-100 | 24546 | C4-1/8-T0-2002-F |
| A8R55 | 0757-0465 | 6 | | RESISTOR 100K 1% .125W F TC=0+-100 | 24546 | C4-1/8-T0-1003-F |
| A8R56 | 0684-4731 | 2 | | RESISTOR 47K 10% .25W FC TC=-400/+800 | 01121 | CB4731 |
| A8R57 | 0684-4731 | 2 | | RESISTOR 47K 10% .25W FC TC=-400/+800 | 01121 | CB4731 |
| A8R58 | 0698-3519 | 1 | 1 | RESISTOR 12.4K 1% .125W F TC=0+-100 | 24546 | C4-1/8-T0-1242-F |
| A8R59 | 0698-3228 | 9 | | RESISTOR 49.9K 1% .125W F TC=0+-100 | 28480 | 0698-3228 |
| A8R61 | 0698-3149 | 3 | 2 | RESISTOR 255K 1% .125W F TC=0+-100 | 24546 | C4-1/8-T0-2553-F |
| A8R62 | 0698-3266 | 5 | 1 | RESISTOR 237K 1% .125W F TC=0+-100 | 24546 | C4-1/8-T0-2373-F |
| A8R63 | 0698-4532 | 0 | 1 | RESISTOR 280K 1% .125W F TC=0+-100 | 24546 | C4-1/8-T0-2803-F |
| A8R64 | 0698-3460 | 1 | 1 | RESISTOR 422K 1% .125W F TC=0+-100 | 28480 | 0698-3460 |
| A8R65 | 0698-7332 | 4 | 1 | RESISTOR 1M 1% .125W F TC=0+-100 | 28480 | 0698-7332 |
| A8R66 | 0698-4505 | 7 | | RESISTOR 71.5K 1% .125W F TC=0+-100 | 24546 | C4-1/8-T0-7152-F |
| A8R67 | 0757-0486 | 1 | 1 | RESISTOR 750K 1% .125W F TC=0+-100 | 28480 | 0757-0486 |
| A8R68 | 0757-0469 | 0 | | RESISTOR 150K 1% .125W F TC=0+-100 | 24546 | C4-1/8-T0-1503-F |
| A8R69 | 0684-1041 | 1 | | RESISTOR 100K 10% .25W FC TC=-400/+800 | 01121 | CB1041 |
| A8R71 | 0684-1041 | 1 | | RESISTOR 100K 10% .25W FC TC=-400/+800 | 01121 | CB1041 |
| A8R72 | 0757-0394 | 0 | | RESISTOR 51.1 1% .125W F TC=0+-100 | 24546 | C4-1/8-T0-51R1-F |
| A8R73 | 0757-0273 | 4 | | RESISTOR 3.01K 1% .125W F TC=0+-100 | 24546 | C4-1/8-T0-3011-F |
| A8R74 | 0757-0284 | 7 | 1 | RESISTOR 150 1% .125W F TC=0+-100 | 24546 | C4-1/8-T0-151-F |
| A8R75 | 0757-0282 | 5 | | RESISTOR 221 1% .125W F TC=0+-100 | 24546 | C4-1/8-T0-221R-F |
| A8R76 | 0757-0283 | 6 | | RESISTOR 2K 1% .125W F TC=0+-100 | 24546 | C4-1/8-T0-2001-F |
| A8R77 | 0698-3161 | 9 | | RESISTOR 38.3K 1% .125W F TC=0+-100 | 24546 | C4-1/8-T0-3832-F |
| A8R78 | 0698-3149 | 3 | | RESISTOR 255K 1% .125W F TC=0+-100 | 24546 | C4-1/8-T0-2553-F |
| A8R95 | 0757-0283 | 6 | | RESISTOR 2K 1% .125W F TC=0+-100 | 24546 | C4-1/8-T0-2001-F |
| A8R96 | 0757-0401 | 0 | | RESISTOR 100 1% .125W F TC=0+-100 | 24546 | C4-1/8-T0-101-F |
| A8U1 | 1826-0021 | 8 | | IC OP AMP GP TO-99 | 27014 | LM310H |
| A8U2 | 1826-0021 | 8 | | IC OP AMP GP TO-99 | 27014 | LM310H |
| A8U3 | 1826-0043 | 4 | | IC OP AMP GP TO-99 | 01928 | CA307T |
| A8U4 | 1826-0021 | 8 | | IC OP AMP GP TO-99 | 27014 | LM310H |
| A8U5 | 1826-0043 | 4 | | IC OP AMP GP TO-99 | 01928 | CA307T |
| A8U6 | 1826-0043 | 4 | | IC OP AMP GP TO-99 | 01928 | CA307T |
| A8U7 | 1820-0203 | 6 | | IC OP AMP GP TO-99 | 01928 | CA741CT |
| A8U8 | 1820-0203 | 6 | | IC OP AMP GP TO-99 | 01928 | CA741CT |
| | 1205-0048 | 3 | 1 | HEAT SINK TO-8-CS | 28480 | 1205-0048 |
| | 1251-0599 | 6 | 1 | CONNECTOR 3-PIN M POST TYPE | 28480 | 1251-0599 |
| A9 | 03580-66509 | 5 | 1 | BOARD ASSEMBLY-INPUT (STD, 3580A ONLY) | 28480 | 03580-66509 |
| A9C1 | 0170-0042 | 1 | | CAPACITOR-FXD .33UF +-5% 100VDC POLYE | 99515 | E1-3340 |
| A9C2 | 0121-0407 | 9 | 5 | CAPACITOR-V TRMR-PSTN .7-3PF 600V | 72982 | 536-016 |
| A9C3 | 0121-0407 | 9 | | CAPACITOR-V TRMR-PSTN .7-3PF 600V | 72982 | 536-016 |
| A9C4 | 0121-0407 | 9 | | CAPACITOR-V TRMR-PSTN .7-3PF 600V | 72982 | 536-016 |
| A9C5 | 0121-0407 | 9 | | CAPACITOR-V TRMR-PSTN .7-3PF 600V | 72982 | 536-016 |
| A9C6 | 0121-0407 | 9 | | CAPACITOR-V TRMR-PSTN .7-3PF 600V | 72982 | 536-016 |
| A9C7 | 0150-0022 | 5 | | CAPACITOR-FXD 3.3PF +-10% 500VDC TI DIOX | 28480 | 0150-0022 |
| A9C8 | 0140-0162 | 3 | 1 | CAPACITOR-FXD 4700PF +-10% 300VDC MICA | 72136 | DM20F472K0300HV1CR |
| A9C9 | 0150-0011 | 2 | 1 | CAPACITOR-FXD 1.5PF +-20% 500VDC TI DIOX | 28480 | 0150-0011 |
| A9C10 | 0160-2207 | 3 | 1 | CAPACITOR-FXD 300PF +-5% 300VDC MICA | 28480 | 0160-2207 |
| A9C11 | 0150-0022 | 5 | | CAPACITOR-FXD 3.3PF +-10% 500VDC TI DIOX | 28480 | 0150-0022 |
| A9C12 | 0150-0022 | 5 | | CAPACITOR-FXD 3.3PF +-10% 500VDC TI DIOX | 28480 | 0150-0022 |
| A9C13 | 0160-0356 | 9 | 1 | CAPACITOR-FXD 18PF +-5% 300VDC MICA | 28480 | 0160-0356 |
| A9C14 | 0150-0022 | 5 | | CAPACITOR-FXD 3.3PF +-10% 500VDC TI DIOX | 28480 | 0150-0022 |
| A9C15 | 0150-0022 | 5 | | CAPACITOR-FXD 3.3PF +-10% 500VDC TI DIOX | 28480 | 0150-0022 |
| A9C16 | 0180-0229 | 7 | | CAPACITOR-FXD 33UF+-10% 10VDC TA | 56289 | 150D336X9010B2 |
| A9C17 | 0180-0229 | 7 | | CAPACITOR-FXD 33UF+-10% 10VDC TA | 56289 | 150D336X9010B2 |
| A9C18 | 0140-0210 | 2 | 2 | CAPACITOR-FXD 270PF +-5% 300VDC MICA | 72136 | DM15F271J0300HV1CR |
| A9C19 | 0160-2198 | 1 | 1 | CAPACITOR-FXD 20PF +-5% 300VDC MICA | 28480 | 0160-2198 |
| A9C21 | 0180-0060 | 4 | 2 | CAPACITOR-FXD 200UF+75-10% 3VDC AL | 56289 | 30D207G003CC2 |
| A9C22 | 0160-2204 | 0 | | CAPACITOR-FXD 100PF +-5% 300VDC MICA | 28480 | 0160-2204 |
| A9C23 | 0180-0197 | 8 | | CAPACITOR-FXD 2.2UF+-10% 20VDC TA | 56289 | 150D225X9020A2 |
| A9C24 | 0180-1758 | 9 | 3 | CAPACITOR-FXD 300UF+75-10% 3VDC AL | 56289 | 30D307G003DC2 |
| A9C25 | 0180-0061 | 5 | | CAPACITOR-FXD 100UF+75-10% 10VDC AL | 56289 | 30D107G010DC2 |
| A9C26 | 0180-1758 | 9 | | CAPACITOR-FXD 300UF+75-10% 3VDC AL | 56289 | 30D307G003DC2 |
| A9C27 | 0180-0210 | 6 | | CAPACITOR-FXD 3.3UF+-20% 15VDC TA | 56289 | 150D335X0015A2 |
| A9C28 | 0140-0210 | 2 | | CAPACITOR-FXD 270PF +-5% 300VDC MICA | 72136 | DM15F271J0300HV1CR |
| A9C29 | 0180-0060 | 4 | | CAPACITOR-FXD 200UF+75-10% 3VDC AL | 56289 | 30D207G003CC2 |
| A9C30 | 0160-2204 | 0 | | CAPACITOR-FXD 100PF +-5% 300VDC MICA | 28480 | 0160-2204 |
| A9C31 | 0160-0763 | 2 | | CAPACITOR-FXD 5PF +-10% 500VDC MICA | 28480 | 0160-0763 |

See introduction to this section for ordering information
*Indicates factory selected value

Replaceable Parts

## Table 6-3. Replaceable Parts (Cont'd).

| Reference Designation | HP Part Number | C D | Qty | Description | Mfr Code | Mfr Part Number |
|---|---|---|---|---|---|---|
| A9C32 | 0180-1758 | 9 | | CAPACITOR-FXD 300UF+75-10% 3VDC AL | 56289 | 30D307G003DC2 |
| A9C33 | 0180-0061 | 5 | | CAPACITOR-FXD 100UF+75-10% 16VDC AL | 56289 | 30D107G016DC2 |
| A9C34 | 0180-0137 | 6 | 1 | CAPACITOR-FXD 100UF+-20% 10VDC TA | 56289 | 150D107X0010R2 |
| A9C35 | 0160-2724 | 9 | 1 | CAPACITOR-FXD 3600PF +-2% 500VDC MICA | 28480 | 0160-2724 |
| A9C36 | 0140-0217 | 9 | | CAPACITOR-FXD 140PF +-2% 300VDC MICA | 72136 | DM15F141G0300MV1CR |
| A9C37 | 0160-3269 | 9 | 2 | CAPACITOR-FXD 7610PF +-1% 100VDC MICA | 28480 | 0160-3269 |
| A9C38 | 0160-0341 | 2 | 1 | CAPACITOR-FXD 640PF +-1% 300VDC MICA | 28480 | 0160-0341 |
| A9C39 | 0160-3269 | 9 | | CAPACITOR-FXD 7610PF +-1% 100VDC MICA | 28480 | 0160-3269 |
| A9C41 | 0140-0233 | 9 | | CAPACITOR-FXD 480PF +-1% 300VDC MICA | 72136 | DM15F481F0300MV1C |
| A9C42 | 0160-2230 | 2 | 1 | CAPACITOR-FXD 3300PF +-5% 300VDC MICA | 28480 | 0160-2230 |
| A9C43 | 0180-0303 | 8 | 1 | CAPACITOR-FXD 100UF+75-10% 3VDC AL | 56289 | 30D107G003CB2 |
| A9C44 | 0150-0093 | 0 | | CAPACITOR-FXD .01UF +80-20% 100VDC CER | 28480 | 0150-0093 |
| A9C45 | 0180-0374 | 3 | | CAPACITOR-FXD 10UF+-10% 20VDC TA | 56289 | 150D106X9020B2 |
| A9C45 | 0180-0374 | 3 | | CAPACITOR-FXD 10UF+-10% 20VDC TA | 56289 | 150D106X9020B2 |
| A9C46 | 0150-0093 | 0 | | CAPACITOR-FXD .01UF +80-20% 100VDC CER | 28480 | 0150-0093 |
| A9C47 | 0180-0197 | 8 | | CAPACITOR-FXD 2.2UF+-10% 20VDC TA | 56289 | 150D225X9020A2 |
| A9C48 | 0160-2605 | 5 | | CAPACITOR-FXD .02UF +80-20% 25VDC CER | 28480 | 0160-2605 |
| A9C49 | 0150-0093 | 0 | | CAPACITOR-FXD .01UF +80-20% 100VDC CER | 28480 | 0150-0093 |
| A9C51 | 0160-2035 | 5 | 1 | CAPACITOR-FXD 750PF +-5% 300VDC MICA | 28480 | 0160-2035 |
| A9C52 | 0180-0197 | 8 | | CAPACITOR-FXD 2.2UF+-10% 20VDC TA | 56289 | 150D225X9020A2 |
| A9C53 | 0150-0093 | 0 | | CAPACITOR-FXD .01UF +80-20% 100VDC CER | 28480 | 0150-0093 |
| A9C54 | 0180-0197 | 8 | | CAPACITOR-FXD 2.2UF+-10% 20VDC TA | 56289 | 150D225X9020A2 |
| A9C55 | 0160-2009 | 3 | 1 | CAPACITOR-FXD 820PF +-5% 300VDC MICA | 28480 | 0160-2009 |
| A9C56 | 0180-0197 | 8 | | CAPACITOR-FXD 2.2UF+-10% 20VDC TA | 56289 | 150D225X9020A2 |
| A9C57 | 0150-0093 | 0 | | CAPACITOR-FXD .01UF +80-20% 100VDC CER | 28480 | 0150-0093 |
| A9C58 | 0150-0093 | 0 | | CAPACITOR-FXD .01UF +80-20% 100VDC CER | 28480 | 0150-0093 |
| A9C59 | 0180-0197 | 8 | | CAPACITOR-FXD 2.2UF+-10% 20VDC TA | 56289 | 150D225X9020A2 |
| A9C61 | 0180-0228 | 6 | | CAPACITOR-FXD 22UF+-10% 15VDC TA | 56289 | 150D226X9015B2 |
| A9C62 | 0180-0197 | 8 | | CAPACITOR-FXD 2.2UF+-10% 20VDC TA | 56289 | 150D225X9020A2 |
| A9C63 | 0180-0339 | 0 | 2 | CAPACITOR-FXD 50UF+75-10% 16VDC AL | 56289 | 30D506G016CB2 |
| A9C64 | 0180-0197 | 8 | | CAPACITOR-FXD 2.2UF+-10% 20VDC TA | 56289 | 150D225X9020A2 |
| A9C65 | 0180-0228 | 6 | | CAPACITOR-FXD 22UF+-10% 15VDC TA | 56289 | 150D226X9015B2 |
| A9C66 | 0180-0339 | 0 | | CAPACITOR-FXD 50UF+75-10% 16VDC AL | 56289 | 30D506G016CB2 |
| A9CR1 | 1901-0040 | 1 | | DIODE-SWITCHING 30V 50MA 2NS DO-35 | 28480 | 1901-0040 |
| A9CR2 | 1901-0040 | 1 | | DIODE-SWITCHING 30V 50MA 2NS DO-35 | 28480 | 1901-0040 |
| A9CR3 | 1901-0040 | 1 | | DIODE-SWITCHING 30V 50MA 2NS DO-35 | 28480 | 1901-0040 |
| A9CR4 | 1901-0040 | 1 | | DIODE-SWITCHING 30V 50MA 2NS DO-35 | 28480 | 1901-0040 |
| A9CR5 | 1901-0040 | 1 | | DIODE-SWITCHING 30V 50MA 2NS DO-35 | 28480 | 1901-0040 |
| A9J1 | 1251-2969 | 8 | 1 | CONNECTOR-PHONO SINGLE PHONO JACK, DIP | 28480 | 1251-2969 |
| A9L1 | 9100-3264 | 7 | 1 | INDUCTORRF-CH-MLD 2.34MH 2% .8D Q=200 | 28480 | 9100-3264 |
| A9L2 | 9100-3259 | 0 | 1 | INDUCTORRF-CH-MLD 2.46MH 10% Q=200 | 28480 | 9100-3259 |
| A9L3 | 9100-3260 | 3 | 1 | INDUCTORRF-CH-MLD 2.15H 2% .8D Q=200 | 28480 | 9100-3260 |
| A9L4 | 9100-3277 | 2 | | INDUCTORRF-CH-MLD 3.1MH 2% .62D Q=150 | 28480 | 9100-3277 |
| A9L5 | 9170-0894 | 0 | 1 | CORE-SHIELDING BEAD | 28480 | 9170-0894 |
| A9Q1 | 1855-0377 | 8 | 1 | TRANSISTOR J-FET N-CHAN D-MODE TO-18 SI | 28480 | 1855-0377 |
| A9Q2 | 1854-0226 | 4 | | TRANSISTOR NPN 2N4384 SI TO-18 PD=500MW | 13606 | 2N4384 |
| A9Q3 | 1853-0086 | 2 | | TRANSISTOR PNP SI PD=310MW FT=40MHZ | 27014 | 2N5087 |
| A9Q4 | 1854-0071 | 7 | | TRANSISTOR NPN SI PD=300MW FT=200MHZ | 28480 | 1854-0071 |
| A9Q5 | 1854-0071 | 7 | | TRANSISTOR NPN SI PD=300MW FT=200MHZ | 28480 | 1854-0071 |
| A9Q6 | 1854-0226 | 4 | | TRANSISTOR NPN 2N4384 SI TO-18 PD=500MW | 13606 | 2N4384 |
| A9Q7 | 1853-0086 | 2 | | TRANSISTOR PNP SI PD=310MW FT=40MHZ | 27014 | 2N5087 |
| A9Q8 | 1854-0071 | 7 | | TRANSISTOR NPN SI PD=300MW FT=200MHZ | 28480 | 1854-0071 |
| A9Q9 | 1854-0071 | 7 | | TRANSISTOR NPN SI PD=300MW FT=200MHZ | 28480 | 1854-0071 |
| A9Q11 | 1854-0071 | 7 | | TRANSISTOR NPN SI PD=300MW FT=200MHZ | 28480 | 1854-0071 |
| A9Q12 | 1854-0071 | 7 | | TRANSISTOR NPN SI PD=300MW FT=200MHZ | 28480 | 1854-0071 |
| A9Q13 | 1854-0071 | 7 | | TRANSISTOR NPN SI PD=300MW FT=200MHZ | 28480 | 1854-0071 |
| A9Q14 | 1854-0226 | 4 | | TRANSISTOR NPN 2N4384 SI TO-18 PD=500MW | 13606 | 2N4384 |
| A9Q15 | 1853-0010 | 2 | | TRANSISTOR PNP SI TO-18 PD=360MW | 28480 | 1853-0010 |
| A9Q16 | 1854-0071 | 7 | | TRANSISTOR NPN SI PD=300MW FT=200MHZ | 28480 | 1854-0071 |
| A9Q17 | 1854-0071 | 7 | | TRANSISTOR NPN SI PD=300MW FT=200MHZ | 28480 | 1854-0071 |
| A9Q18 | 1854-0071 | 7 | | TRANSISTOR NPN SI PD=300MW FT=200MHZ | 28480 | 1854-0071 |
| A9Q19 | 1853-0010 | 2 | | TRANSISTOR PNP SI TO-18 PD=360MW | 28480 | 1853-0010 |
| A9R1 | 2100-0580 | 7 | 1 | RESISTOR-TRMR 500K 10% C TOP-ADJ 1-TRN | 28480 | 2100-0580 |
| A9R2 | 2100-0640 | 0 | 1 | RESISTOR-VAR W/SW 5K 10% LIN SPST-NO | 28480 | 2100-0640 |
| A9R3 | 0698-5159 | 9 | 2 | RESISTOR 1M .5% .25W F TC=0+-100 | 28480 | 0698-5159 |
| A9R4 | 0698-4055 | 2 | 2 | RESISTOR 1K .25% .125W F TC=0+-100 | 03888 | PME55-1/8-T0-1001-C |
| A9R5 | 0698-5132 | 8 | 2 | RESISTOR 990K .5% .25W F TC=0+-100 | 28480 | 0698-5132 |
| A9R6 | 0757-0271 | 2 | 2 | RESISTOR 124K 1% .125W F TC=0+-100 | 24546 | C4-1/8-T0-1243-F |
| A9R7 | 0698-6661 | 0 | 1 | RESISTOR 11.11K .25% .125W F TC=0+-100 | 28480 | 0698-6661 |
| A9R8 | 0698-5132 | 8 | | RESISTOR 990K .5% .25W F TC=0+-100 | 28480 | 0698-5132 |
| A9R9 | 0698-5131 | 7 | 2 | RESISTOR 900K .5% .25W F TC=0+-100 | 19701 | MF52C1/4-T0-9003-D |
| A9R11 | 0698-6659 | 6 | 1 | RESISTOR 127K .25% .125W F TC=0+-100 | 28480 | 0698-6659 |
| A9R12 | 0698-5131 | 7 | | RESISTOR 900K .5% .25W F TC=0+-100 | 19701 | MF52C1/4-T0-9003-D |
| A9R13 | 0757-0430 | 5 | | RESISTOR 2.21K 1% .125W F TC=0+-100 | 24546 | C4-1/8-T0-2211-F |
| A9R14 | 0698-3150 | 6 | 1 | RESISTOR 2.37K 1% .125W F TC=0+-100 | 24546 | C4-1/8-T0-2371-F |
| A9R15 | 0698-5159 | 9 | | RESISTOR 1M .5% .25W F TC=0+-100 | 28480 | 0698-5159 |
| A9R16 | 0757-0824 | 1 | 1 | RESISTOR 2K 1% .5W F TC=0+-100 | 28480 | 0757-0824 |

See introduction to this section for ordering information
*Indicates factory selected value

Replaceable Parts

## Table 6-3. Replaceable Parts (Cont'd).

| Reference Designation | HP Part Number | C D | Qty | Description | Mfr Code | Mfr Part Number |
|---|---|---|---|---|---|---|
| A9R17 | 0684-1041 | 1 | | RESISTOR 100K 10% .25W FC TC=-400/+800 | 01121 | CB1041 |
| A9R18 | 0698-3581 | 7 | 2 | RESISTOR 13.7K 1% .125W F TC=0+-100 | 24546 | C4-1/8-T0-1372-F |
| A9R19 | 0698-3581 | 7 | | RESISTOR 13.7K 1% .125W F TC=0+-100 | 24546 | C4-1/8-T0-1372-F |
| A9R21 | 0698-4473 | 8 | | RESISTOR 8.06K 1% .125W F TC=0+-100 | 24546 | C4-1/8-T0-8061-F |
| A9R22 | 0757-0442 | 9 | | RESISTOR 10K 1% .125W F TC=0+-100 | 24546 | C4-1/8-T0-1002-F |
| A9R23 | 0698-4421 | 6 | 2 | RESISTOR 249 1% .125W F TC=0+-100 | 24546 | C4-1/8-T0-249R-F |
| A9R24 | 0698-3193 | 7 | | RESISTOR 10K .25% .125W F TC=0+-50 | 28480 | 0698-3193 |
| A9R25 | 0698-6862 | 3 | 1 | RESISTOR 1.153K .25% .125W F TC=0+-50 | 28480 | 0698-6862 |
| A9R26 | 0698-4486 | 3 | | RESISTOR 24.9K 1% .125W F TC=0+-100 | 24546 | C4-1/8-T0-2492-F |
| A9R27 | 0698-3382 | 6 | | RESISTOR 5.49K 1% .125W F TC=0+-100 | 24546 | C4-1/8-T0-5491-F |
| A9R28 | 0757-0407 | 6 | | RESISTOR 200 1% .125W F TC=0+-100 | 24546 | C4-1/8-T0-201-F |
| A9R29 | 0698-4464 | 7 | 1 | RESISTOR 887 1% .125W F TC=0+-100 | 24546 | C4-1/8-T0-887R-F |
| A9R31 | 0684-1041 | 1 | | RESISTOR 100K 10% .25W FC TC=-400/+800 | 01121 | CB1041 |
| A9R32 | 0757-0448 | 5 | | RESISTOR 18.2K 1% .125W F TC=0+-100 | 24546 | C4-1/8-T0-1822-F |
| A9R33 | 0684-4701 | 6 | | RESISTOR 47 10% .25W FC TC=-400/+500 | 01121 | CB4701 |
| A9R34 | 0757-0407 | 6 | | RESISTOR 200 1% .125W F TC=0+-100 | 24546 | C4-1/8-T0-201-F |
| A9R35 | 0698-3488 | 3 | | RESISTOR 442 1% .125W F TC=0+-100 | 24546 | C4-1/8-T0-442R-F |
| A9R36 | 0684-1041 | 1 | | RESISTOR 100K 10% .25W FC TC=-400/+800 | 01121 | CB1041 |
| A9R37 | 0757-0442 | 9 | | RESISTOR 10K 1% .125W F TC=0+-100 | 24546 | C4-1/8-T0-1002-F |
| A9R38 | 0757-0278 | 9 | 2 | RESISTOR 1.78K 1% .125W F TC=0+-100 | 24546 | C4-1/8-T0-1781-F |
| A9R39 | 0698-6780 | 4 | 1 | RESISTOR 5.62K .25% .125W F TC=0+-50 | 28480 | 0698-6780 |
| A9R40 | 0684-1041 | 1 | | RESISTOR 100K 10% .25W FC TC=-400/+800 | 01121 | CB1041 |
| A9R41 | 0698-6823 | 6 | 1 | RESISTOR 2.61K .25% .125W F TC=0+-100 | 19701 | MFQC1/8-T0-2611-C |
| A9R42 | 0698-4473 | 8 | | RESISTOR 8.06K 1% .125W F TC=0+-100 | 24546 | C4-1/8-T0-8061-F |
| A9R43 | 0698-3495 | 2 | | RESISTOR 866 1% .125W F TC=0+-100 | 24546 | C4-1/8-T0-866R-F |
| A9R44 | 0757-0424 | 7 | 1 | RESISTOR 1.1K 1% .125W F TC=0+-100 | 24546 | C4-1/8-T0-1101-F |
| A9R45 | 0757-0442 | 9 | | RESISTOR 10K 1% .125W F TC=0+-100 | 24546 | C4-1/8-T0-1002-F |
| A9R46 | 0757-0442 | 9 | | RESISTOR 10K 1% .125W F TC=0+-100 | 24546 | C4-1/8-T0-1002-F |
| A9R47 | 0698-3150 | 0 | 1 | RESISTOR 4.22K 1% .125W F TC=0+-100 | 24546 | C4-1/8-T0-4221-F |
| A9R48 | 0757-0407 | 6 | | RESISTOR 200 1% .125W F TC=0+-100 | 24546 | C4-1/8-T0-201-F |
| A9R49 | 0698-4483 | 0 | | RESISTOR 18.7K 1% .125W F TC=0+-100 | 24546 | C4-1/8-T0-1872-F |
| A9R50 | 0683-1025 | 9 | | RESISTOR 1K 5% .25W FC TC=-400/+600 | 01121 | CB1025 |
| A9R51 | 0698-4421 | 6 | | RESISTOR 249 1% .125W F TC=0+-100 | 24546 | C4-1/8-T0-249R-F |
| A9R52 | 0684-1041 | 1 | | RESISTOR 100K 10% .25W FC TC=-400/+800 | 01121 | CB1041 |
| A9R53 | 0757-0278 | 9 | | RESISTOR 1.78K 1% .125W F TC=0+-100 | 24546 | C4-1/8-T0-1781-F |
| A9R54 | 0757-0407 | 6 | | RESISTOR 200 1% .125W F TC=0+-100 | 24546 | C4-1/8-T0-201-F |
| A9R55 | 0698-3327 | 9 | 1 | RESISTOR 3.92K .5% .125W F TC=0+-100 | 03888 | PME55-1/8-T0-3921-D |
| A9R56 | 0698-4516 | 2 | 1 | RESISTOR 137K 1% .125W F TC=0+-100 | 24546 | C4-1/8-T0-1373-F |
| A9R57 | 0698-4492 | 1 | 1 | RESISTOR 32.4K 1% .125W F TC=0+-100 | 24546 | C4-1/8-T0-3242-F |
| A9R58 | 0698-4055 | 2 | | RESISTOR 1K .25% .125W F TC=0+-100 | 03888 | PME55-1/8-T0-1001-C |
| A9R59 | 0698-3497 | 4 | | RESISTOR 6.04K 1% .125W F TC=0+-100 | 24546 | C4-1/8-T0-6040-F |
| A9R61 | 0698-4488 | 5 | | RESISTOR 26.7K 1% .125W F TC=0+-100 | 24546 | C4-1/8-T0-2672-F |
| A9R62 | 0698-7417 | 6 | 1 | RESISTOR 69.8K .25% .125W F TC=0+-100 | 19701 | MFQC1/8-T0-6982-C |
| A9R63 | 0757-0407 | 6 | | RESISTOR 200 1% .125W F TC=0+-100 | 24546 | C4-1/8-T0-201-F |
| A9R64 | 0757-0442 | 9 | | RESISTOR 10K 1% .125W F TC=0+-100 | 24546 | C4-1/8-T0-1002-F |
| A9R65 | 0757-0161 | 9 | | RESISTOR 604 1% .125W F TC=0+-100 | 24546 | C4-1/8-T0-604R-F |
| A9R66 | 0698-4422 | 7 | 1 | RESISTOR 1.27K 1% .125W F TC=0+-100 | 24546 | C4-1/8-T0-1271-F |
| A9R67 | 0757-0283 | 6 | | RESISTOR 2K 1% .125W F TC=0+-100 | 24546 | C4-1/8-T0-2001-F |
| A9R68 | 0757-0976 | 4 | 2 | RESISTOR 150K 2% .125W F TC=0+-100 | 24546 | C4-1/8-T0-1502-G |
| A9R69 | 0698-4202 | 1 | 2 | RESISTOR 8.87K 1% .125W F TC=0+-100 | 24546 | C4-1/8-T0-8871-F |
| A9R71 | 0757-0438 | 3 | | RESISTOR 5.11K 1% .125W F TC=0+-100 | 24546 | C4-1/8-T0-5111-F |
| A9R72 | 0757-0283 | 6 | | RESISTOR 2K 1% .125W F TC=0+-100 | 24546 | C4-1/8-T0-2001-F |
| A9R73 | 0698-4202 | 1 | | RESISTOR 8.87K 1% .125W F TC=0+-100 | 24546 | C4-1/8-T0-8871-F |
| A9R74 | 0757-0976 | 4 | | RESISTOR 150K 2% .125W F TC=0+-100 | 24546 | C4-1/8-T0-1502-G |
| A9R75 | 0757-0453 | 2 | | RESISTOR 30.1K 1% .125W F TC=0+-100 | 24546 | C4-1/8-T0-3012-F |
| A9R76 | 0757-0438 | 3 | | RESISTOR 5.11K 1% .125W F TC=0+-100 | 24546 | C4-1/8-T0-5111-F |
| A9R77 | 0757-0438 | 3 | | RESISTOR 5.11K 1% .125W F TC=0+-100 | 24546 | C4-1/8-T0-5111-F |
| A9R78 | 0683-1025 | 9 | | RESISTOR 1K 5% .25W FC TC=-400/+600 | 01121 | CB1025 |
| A9R79 | 0757-0438 | 9 | | RESISTOR 3.65K 1% .125W F TC=0+-100 | 24546 | C4-1/8-T0-3651-F |
| A9R81 | 0698-3437 | 2 | 3 | RESISTOR 133 1% .125W F TC=0+-100 | 24546 | C4-1/8-T0-133R-F |
| A9R82 | 0698-3437 | 2 | | RESISTOR 133 1% .125W F TC=0+-100 | 24546 | C4-1/8-T0-133R-F |
| A9R83 | 0698-3437 | 2 | | RESISTOR 133 1% .125W F TC=0+-100 | 24546 | C4-1/8-T0-133R-F |
| A9R84 | 0757-0404 | 3 | 4 | RESISTOR 130 1% .125W F TC=0+-100 | 24546 | C4-1/8-T0-131-F |
| A9R85 | 0757-0404 | 3 | | RESISTOR 130 1% .125W F TC=0+-100 | 24546 | C4-1/8-T0-131-F |
| A9R86 | 0757-0404 | 3 | | RESISTOR 130 1% .125W F TC=0+-100 | 24546 | C4-1/8-T0-131-F |
| A9R87 | 0757-0404 | 3 | | RESISTOR 130 1% .125W F TC=0+-100 | 24546 | C4-1/8-T0-131-F |
| A9R88 | 0698-3446 | 3 | 1 | RESISTOR 383 1% .125W F TC=0+-100 | 24546 | C4-1/8-T0-383R-F |
| A9R89 | 0757-0438 | 3 | | RESISTOR 5.11K 1% .125W F TC=0+-100 | 24546 | C4-1/8-T0-5111-F |
| A9R91 | 0757-0161 | 9 | | RESISTOR 604 1% .125W F TC=0+-100 | 24546 | C4-1/8-T0-604R-F |
| A9R92 | 0698-4441 | 0 | | RESISTOR 3.74K 1% .125W F TC=0+-100 | 24546 | C4-1/8-T0-3741-F |
| A9R93 | 0698-4020 | 1 | 1 | RESISTOR 9.53K 1% .125W F TC=0+-100 | 24546 | C4-1/8-T0-9531-F |
| A9R94 | 0757-0435 | 0 | 3 | RESISTOR 3.92K 1% .125W F TC=0+-100 | 24546 | C4-1/8-T0-3921-F |
| A9R95 | 0757-0161 | 9 | | RESISTOR 604 1% .125W F TC=0+-100 | 24546 | C4-1/8-T0-604R-F |
| A9R96 | 0757-0435 | 0 | | RESISTOR 3.92K 1% .125W F TC=0+-100 | 24546 | C4-1/8-T0-3921-F |
| A9R97 | 0757-0280 | 3 | | RESISTOR 1K 1% .125W F TC=0+-100 | 24546 | C4-1/8-T0-1001-F |

See introduction to this section for ordering information
*Indicates factory selected value

Replaceable Parts

## Table 6-3. Replaceable Parts (Cont'd).

| Reference Designation | HP Part Number | C D | Qty | Description | Mfr Code | Mfr Part Number |
|---|---|---|---|---|---|---|
| A9R98 | 0698-4486 | 3 | | RESISTOR 24.9K 1% .125W F TC=0+-100 | 24546 | C4-1/8-T0-2492-F |
| A9R99 | 0757-0280 | 3 | | RESISTOR 1K 1% .125W F TC=0+-100 | 24546 | C4-1/8-T0-1001-F |
| A9R101 | 0698-4486 | 3 | | RESISTOR 24.9K 1% .125W F TC=0+-100 | 24546 | C4-1/8-T0-2492-F |
| A9R102 | 0757-0271 | 2 | | RESISTOR 124K 1% .125W F TC=0+-100 | 24546 | C4-1/8-T0-1243-F |
| A9R103 | 0757-0161 | 9 | | RESISTOR 604 1% .125W F TC=0+-100 | 24546 | C4-1/8-T0-604R-F |
| A9R104 | 0757-0401 | 0 | | RESISTOR 100 1% .125W F TC=0+-100 | 24546 | C4-1/8-T0-101-F |
| A9R105 | 0757-0438 | 3 | | RESISTOR 5.11K 1% .125W F TC=0+-100 | 24546 | C4-1/8-T0-5111-F |
| A9R106 | 0757-0435 | 0 | | RESISTOR 3.92K 1% .125W F TC=0+-100 | 24546 | C4-1/8-T0-3921-F |
| A9R107 | 0698-3158 | 4 | 1 | RESISTOR 23.7K 1% .125W F TC=0+-100 | 24546 | C4-1/8-T0-2372-F |
| A9R108 | 0683-1025 | 9 | | RESISTOR 1K 5% .25W FC TC=-400/+600 | 01121 | CB1025 |
| A9R109 | 0757-0422 | 5 | 1 | RESISTOR 909 1% .125W F TC=0+-100 | 24546 | C4-1/8-T0-909R-F |
| A9R111 | 0698-4441 | 0 | | RESISTOR 3.74K 1% .125W F TC=0+-100 | 24546 | C4-1/8-T0-3741-F |
| A9R112 | 0757-0413 | 4 | 1 | RESISTOR 392 1% .125W F TC=0+-100 | 24546 | C4-1/8-T0-392R-F |
| A9R113 | 0683-2045 | 5 | 2 | RESISTOR 200K 5% .25W FC TC=-800/+900 | 01121 | CB2045 |
| A9R114 | 0684-1041 | 1 | | RESISTOR 100K 10% .25W FC TC=-400/+800 | 01121 | CB1041 |
| A9R115 | 0684-1031 | 9 | | RESISTOR 10K 10% .25W FC TC=-400/+700 | 01121 | CB1031 |
| A9R116 | 0698-3557 | 7 | | RESISTOR 806 1% .125W F TC=0+-100 | 24546 | C4-1/8-T0-806R-F |
| A9R117 | 0683-2045 | 5 | | RESISTOR 200K 5% .25W FC TC=-800/+900 | 01121 | CB2045 |
| A9R118 | 0684-1041 | 1 | | RESISTOR 100K 10% .25W FC TC=-400/+800 | 01121 | CB1041 |
| A9R119 | 0684-1031 | 9 | | RESISTOR 10K 10% .25W FC TC=-400/+700 | 01121 | CB1031 |
| A9R121 | 0698-3153 | 9 | 1 | RESISTOR 3.83K 1% .125W F TC=0+-100 | 24546 | C4-1/8-T0-3831-F |
| A9R122 | 0684-1011 | 5 | | RESISTOR 100 10% .25W FC TC=-400/+500 | 01121 | CB1011 |
| A9R123 | 0684-4701 | 6 | | RESISTOR 47 10% .25W FC TC=-400/+500 | 01121 | CB4701 |
| A9R124 | 0683-1025 | 9 | | RESISTOR 1K 5% .25W FC TC=-400/+600 | 01121 | CB1025 |
| A9R125 | 0757-0438 | 3 | | RESISTOR 5.11K 1% .125W F TC=0+-100 | 24546 | C4-1/8-T0-5111-F |
| A9R126 | 0683-4715 | 0 | | RESISTOR 470 5% .25W FC TC=-400/+600 | 01121 | CB4715 |
| A9R127 | 0757-0462 | 3 | 2 | RESISTOR 75K 1% .125W F TC=0+-100 | 24546 | C4-1/8-T0-7502-F |
| A9R128 | 0683-1025 | 9 | | RESISTOR 1K 5% .25W FC TC=-400/+600 | 01121 | CB1025 |
| A9R129 | 0684-4701 | 6 | | RESISTOR 47 10% .25W FC TC=-400/+500 | 01121 | CB4701 |
| A9R131 | 0757-0438 | 3 | | RESISTOR 5.11K 1% .125W F TC=0+-100 | 24546 | C4-1/8-T0-5111-F |
| A9R132 | 0683-4715 | 0 | | RESISTOR 470 5% .25W FC TC=-400/+600 | 01121 | CB4715 |
| A9R133 | 0757-0462 | 3 | | RESISTOR 75K 1% .125W F TC=0+-100 | 24546 | C4-1/8-T0-7502-F |
| A9S2 | 3100-2738 | 2 | 1 | SWITCH-ROTARY | 28480 | 3100-2738 |
| A9S#1 | 03580-61905 | 5 | 1 | SWITCH ASSEMBLY | 28480 | 03580-61905 |
| A9U1 | 1826-0044 | 5 | 1 | IC OP AMP GP DUAL 14-DIP-C | 07263 | UA739DC |
| A9U2 | 1820-0427 | 6 | | IC MODULATOR TO-100 | 04713 | MC1496G |

See introduction to this section for ordering information
*Indicates factory selected value

## Table 6-3. Replaceable Parts (Cont'd).

| Reference Designation | HP Part Number | C D | Qty | Description | Mfr Code | Mfr Part Number |
|---|---|---|---|---|---|---|
| A9 | 03580-66519 | 7 | 1 | BOARD ASSEMBLY-INPUT (OPT. 002 ONLY) | 28480 | 03580-66519 |
| A9C1 | 0170-0042 | 1 | 1 | CAPACITOR-FXD .33UF +-5% 100VDC POLYE | 99515 | E1-334D |
| A9C2 | 0121-0407 | 9 | 5 | CAPACITOR-V TRMR-PSTN .7-3PF 600V | 72982 | 536-016 |
| A9C3 | 0121-0407 | 9 | | CAPACITOR-V TRMR-PSTN .7-3PF 600V | 72982 | 536-016 |
| A9C4 | 0121-0407 | 9 | | CAPACITOR-V TRMR-PSTN .7-3PF 600V | 72982 | 536-016 |
| A9C5 | 0121-0407 | 9 | | CAPACITOR-V TRMR-PSTN .7-3PF 600V | 72982 | 536-016 |
| A9C6 | 0121-0407 | 9 | | CAPACITOR-V TRMR-PSTN .7-3PF 600V | 72982 | 536-016 |
| A9C7 | 0150-0022 | 5 | 4 | CAPACITOR-FXD 3.3PF +-10% 500VDC TI DIOX | 28480 | 0150-0022 |
| A9C8 | 0140-0162 | 3 | 1 | CAPACITOR-FXD 4700PF +-10% 300VDC MICA | 72136 | DM20F472K0300WV1CR |
| A9C9 | 0150-0011 | 2 | 1 | CAPACITOR-FXD 1.5PF +-20% 500VDC TI DIOX | 28480 | 0150-0011 |
| A9C10 | 0160-2207 | 3 | 1 | CAPACITOR-FXD 300PF +-5% 300VDC MICA | 28480 | 0160-2207 |
| A9C11 | 0150-0022 | 5 | | CAPACITOR-FXD 3.3PF +-10% 500VDC TI DIOX | 28480 | 0150-0022 |
| A9C13 | 0160-0356 | 9 | 1 | CAPACITOR-FXD 18PF +-5% 300VDC MICA | 28480 | 0160-0356 |
| A9C14 | 0150-0022 | 5 | | CAPACITOR-FXD 3.3PF +-10% 500VDC TI DIOX | 28480 | 0150-0022 |
| A9C15 | 0150-0022 | 5 | | CAPACITOR-FXD 3.3PF +-10% 500VDC TI DIOX | 28480 | 0150-0022 |
| A9C16 | 0180-0229 | 7 | 2 | CAPACITOR-FXD 33UF+-10% 10VDC TA | 56289 | 150D336X9010B2 |
| A9C17 | 0180-0229 | 7 | | CAPACITOR-FXD 33UF+-10% 10VDC TA | 56289 | 150D336X9010B2 |
| A9C18 | 0140-0210 | 2 | 2 | CAPACITOR-FXD 270PF +-5% 300VDC MICA | 72136 | DM15F271J0300WV1CR |
| A9C19 | 0160-2198 | 1 | 1 | CAPACITOR-FXD 20PF +-5% 300VDC MICA | 28480 | 0160-2198 |
| A9C21 | 0180-0060 | 4 | 2 | CAPACITOR-FXD 200UF+75-10% 3VDC AL | 56289 | 30D207G003CC2 |
| A9C22 | 0160-2204 | 0 | 2 | CAPACITOR-FXD 100PF +-5% 300VDC MICA | 28480 | 0160-2204 |
| A9C23 | 0180-0197 | 8 | 8 | CAPACITOR-FXD 2.2UF+-10% 20VDC TA | 56289 | 150D225X9020A2 |
| A9C24 | 0180-1758 | 9 | 3 | CAPACITOR-FXD 300UF+75-10% 3VDC AL | 56289 | 30D307G003DC2 |
| A9C25 | 0180-0061 | 5 | 2 | CAPACITOR-FXD 100UF+75-10% 16VDC AL | 56289 | 30D107G016DC2 |
| A9C26 | 0180-1758 | 9 | | CAPACITOR-FXD 300UF+75-10% 3VDC AL | 56289 | 30D307G003DC2 |
| A9C27 | 0180-0210 | 6 | 1 | CAPACITOR-FXD 3.3UF+-20% 15VDC TA | 56289 | 150D335X0015A2 |
| A9C28 | 0140-0210 | 2 | | CAPACITOR-FXD 270PF +-5% 300VDC MICA | 72136 | DM15F271J0300WV1CR |
| A9C29 | 0180-0060 | 4 | | CAPACITOR-FXD 200UF+75-10% 3VDC AL | 56289 | 30D207G003CC2 |
| A9C30 | 0160-2204 | 0 | | CAPACITOR-FXD 100PF +-5% 300VDC MICA | 28480 | 0160-2204 |
| A9C31 | 0160-0763 | 2 | 1 | CAPACITOR-FXD 5PF +-10% 500VDC MICA | 28480 | 0160-0763 |
| A9C32 | 0180-1758 | 9 | | CAPACITOR-FXD 300UF+75-10% 3VDC AL | 56289 | 30D307G003DC2 |
| A9C33 | 0180-0061 | 5 | | CAPACITOR-FXD 100UF+75-10% 16VDC AL | 56289 | 30D107G016DC2 |
| A9C34 | 0180-0137 | 6 | 1 | CAPACITOR-FXD 100UF+-20% 10VDC TA | 56289 | 150D107X0010R2 |
| A9C35 | 0160-2724 | 9 | 1 | CAPACITOR-FXD 3600PF +-2% 500VDC MICA | 28480 | 0160-2724 |
| A9C36 | 0140-0217 | 9 | 1 | CAPACITOR-FXD 140PF +-2% 300VDC MICA | 72136 | DM15F141G0300WV1CR |
| A9C37 | 0160-3269 | 9 | 2 | CAPACITOR-FXD 7610PF +-1% 100VDC MICA | 28480 | 0160-3269 |
| A9C38 | 0160-0341 | 2 | 1 | CAPACITOR-FXD 640PF +-1% 300VDC MICA | 28480 | 0160-0341 |
| A9C39 | 0160-3269 | 9 | | CAPACITOR-FXD 7610PF +-1% 100VDC MICA | 28480 | 0160-3269 |
| A9C41 | 0140-0233 | 9 | 1 | CAPACITOR-FXD 480PF +-1% 300VDC MICA | 72136 | DM15F481F0300WV1C |
| A9C42 | 0160-2230 | 2 | 1 | CAPACITOR-FXD 3300PF +-5% 300VDC MICA | 28480 | 0160-2230 |
| A9C43 | 0180-0303 | 8 | 1 | CAPACITOR-FXD 100UF+75-10% 3VDC AL | 56289 | 30D107G003CB2 |
| A9C44 | 0150-0093 | 0 | 6 | CAPACITOR-FXD .01UF +80-20% 100VDC CER | 28480 | 0150-0093 |
| A9C45 | 0180-0374 | 3 | 1 | CAPACITOR-FXD 10UF+-10% 20VDC TA | 56289 | 150D106X9020B2 |
| A9C46 | 0150-0093 | 0 | | CAPACITOR-FXD .01UF +80-20% 100VDC CER | 28480 | 0150-0093 |
| A9C47 | 0180-0197 | 8 | | CAPACITOR-FXD 2.2UF+-10% 20VDC TA | 56289 | 150D225X9020A2 |
| A9C48 | 0160-2605 | 5 | 1 | CAPACITOR-FXD .02UF +80-20% 25VDC CER | 28480 | 0160-2605 |
| A9C49 | 0150-0093 | 0 | | CAPACITOR-FXD .01UF +80-20% 100VDC CER | 28480 | 0150-0093 |
| A9C51 | 0160-2035 | 5 | 1 | CAPACITOR-FXD 750PF +-5% 300VDC MICA | 28480 | 0160-2035 |
| A9C52 | 0180-0197 | 8 | | CAPACITOR-FXD 2.2UF+-10% 20VDC TA | 56289 | 150D225X9020A2 |
| A9C53 | 0150-0093 | 0 | | CAPACITOR-FXD .01UF +80-20% 100VDC CER | 28480 | 0150-0093 |
| A9C54 | 0180-0197 | 8 | | CAPACITOR-FXD 2.2UF+-10% 20VDC TA | 56289 | 150D225X9020A2 |
| A9C55 | 0160-2009 | 3 | 1 | CAPACITOR-FXD 820PF +-5% 300VDC MICA | 28480 | 0160-2009 |
| A9C56 | 0180-0197 | 8 | | CAPACITOR-FXD 2.2UF+-10% 20VDC TA | 56289 | 150D225X9020A2 |
| A9C57 | 0150-0093 | 0 | | CAPACITOR-FXD .01UF +80-20% 100VDC CER | 28480 | 0150-0093 |
| A9C58 | 0150-0093 | 0 | | CAPACITOR-FXD .01UF +80-20% 100VDC CER | 28480 | 0150-0093 |
| A9C59 | 0180-0197 | 8 | | CAPACITOR-FXD 2.2UF+-10% 20VDC TA | 56289 | 150D225X9020A2 |
| A9C61 | 0180-0228 | 6 | 2 | CAPACITOR-FXD 22UF+-10% 15VDC TA | 56289 | 150D226X9015B2 |
| A9C62 | 0180-0197 | 8 | | CAPACITOR-FXD 2.2UF+-10% 20VDC TA | 56289 | 150D225X9020A2 |
| A9C63 | 0180-0339 | 0 | 2 | CAPACITOR-FXD 50UF+75-10% 16VDC AL | 56289 | 30D506G016CB2 |
| A9C64 | 0180-0197 | 8 | | CAPACITOR-FXD 2.2UF+-10% 20VDC TA | 56289 | 150D225X9020A2 |
| A9C65 | 0180-0228 | 6 | | CAPACITOR-FXD 22UF+-10% 15VDC TA | 56289 | 150D226X9015B2 |
| A9C66 | 0180-0339 | 0 | | CAPACITOR-FXD 50UF+75-10% 16VDC AL | 56289 | 30D506G016CB2 |
| A9CR1 | 1901-0040 | 1 | 6 | DIODE-SWITCHING 30V 50MA 2NS DO-35 | 28480 | 1901-0040 |
| A9CR2 | 1901-0040 | 1 | | DIODE-SWITCHING 30V 50MA 2NS DO-35 | 28480 | 1901-0040 |
| A9CR3 | 1901-0040 | 1 | | DIODE-SWITCHING 30V 50MA 2NS DO-35 | 28480 | 1901-0040 |
| A9CR4 | 1901-0040 | 1 | | DIODE-SWITCHING 30V 50MA 2NS DO-35 | 28480 | 1901-0040 |
| A9CR5 | 1901-0040 | 1 | | DIODE-SWITCHING 30V 50MA 2NS DO-35 | 28480 | 1901-0040 |
| A9CR7 | 1901-0040 | 1 | | DIODE-SWITCHING 30V 50MA 2NS DO-35 | 28480 | 1901-0040 |
| A9J1 | 1251-2969 | 8 | 1 | CONNECTOR-PHONO SINGLE PHONO JACK, DIP | 28480 | 1251-2969 |

See introduction to this section for ordering information
*Indicates factory selected value

Replaceable Parts

## Table 6-3. Replaceable Parts (Cont'd).

| Reference Designation | HP Part Number | C D | Qty | Description | Mfr Code | Mfr Part Number |
|---|---|---|---|---|---|---|
| A9L1 | 9100-3264 | 7 | 1 | INDUCTORRF-CH-MLD 2.34MH 2% .8D Q=200 | 28480 | 9100-3264 |
| A9L2 | 9100-3259 | 0 | 1 | INDUCTORRF-CH-MLD 2.96MH 10% Q=200 | 28480 | 9100-3259 |
| A9L3 | 9100-3260 | 3 | 1 | INDUCTORRF-CH-MLD 2.15M 2% .8D Q=200 | 28480 | 9100-3260 |
| A9L4 | 9100-3277 | 2 | 1 | INDUCTORRF-CH-MLD 3.1MH 2% .62D Q=150 | 28480 | 9100-3277 |
| A9L5 | 9170-0894 | 0 | 1 | CORE-SHIELDING BEAD | 28480 | 9170-0894 |
| A9Q1 | 1855-0377 | 8 | 1 | TRANSISTOR J-FET N-CHAN D-MODE TO-18 SI | 28480 | 1855-0377 |
| A9Q2 | 1854-0226 | 4 | 3 | TRANSISTOR NPN 2N4384 SI TO-18 PD=500MW | 13606 | 2N4384 |
| A9Q3 | 1853-0086 | 2 | 2 | TRANSISTOR PNP SI PD=310MW FT=40MHZ | 27014 | 2N5087 |
| A9Q4 | 1854-0071 | 7 | 10 | TRANSISTOR NPN SI PD=300MW FT=200MHZ | 28480 | 1854-0071 |
| A9Q5 | 1854-0071 | 7 | | TRANSISTOR NPN SI PD=300MW FT=200MHZ | 28480 | 1854-0071 |
| A9Q6 | 1854-0226 | 4 | | TRANSISTOR NPN 2N4384 SI TO-18 PD=500MW | 13606 | 2N4384 |
| A9Q7 | 1853-0086 | 2 | | TRANSISTOR PNP SI PD=310MW FT=40MHZ | 27014 | 2N5087 |
| A9Q8 | 1854-0071 | 7 | | TRANSISTOR NPN SI PD=300MW FT=200MHZ | 28480 | 1854-0071 |
| A9Q9 | 1854-0071 | 7 | | TRANSISTOR NPN SI PD=300MW FT=200MHZ | 28480 | 1854-0071 |
| A9Q11 | 1854-0071 | 7 | | TRANSISTOR NPN SI PD=300MW FT=200MHZ | 28480 | 1854-0071 |
| A9Q12 | 1854-0071 | 7 | | TRANSISTOR NPN SI PD=300MW FT=200MHZ | 28480 | 1854-0071 |
| A9Q13 | 1854-0071 | 7 | | TRANSISTOR NPN SI PD=300MW FT=200MHZ | 28480 | 1854-0071 |
| A9Q14 | 1854-0226 | 4 | | TRANSISTOR NPN 2N4384 SI TO-18 PD=500MW | 13606 | 2N4384 |
| A9Q15 | 1853-0010 | 2 | 2 | TRANSISTOR PNP SI TO-18 PD=360MW | 28480 | 1853-0010 |
| A9Q16 | 1854-0071 | 7 | | TRANSISTOR NPN SI PD=300MW FT=200MHZ | 28480 | 1854-0071 |
| A9Q17 | 1854-0071 | 7 | | TRANSISTOR NPN SI PD=300MW FT=200MHZ | 28480 | 1854-0071 |
| A9Q18 | 1854-0071 | 7 | | TRANSISTOR NPN SI PD=300MW FT=200MHZ | 28480 | 1854-0071 |
| A9Q19 | 1853-0010 | 2 | | TRANSISTOR PNP SI TO-18 PD=360MW | 28480 | 1853-0010 |
| A9R1 | 2100-0580 | 7 | 1 | RESISTOR-TRMR 500K 10% C TOP-ADJ 1-TRN | 28480 | 2100-0580 |
| A9R2 | 2100-0640 | 0 | 1 | RESISTOR-VAR W/SW 5K 10% LIN SPST-NO | 28480 | 2100-0640 |
| A9R4 | 0698-4055 | 2 | 2 | RESISTOR 1K .25% .125W F TC=0+-100 | 03888 | PME55-1/8-T0-1001-C |
| A9R5 | 0698-5132 | 8 | 2 | RESISTOR 990K .5% .25W F TC=0+-100 | 28480 | 0698-5132 |
| A9R6 | 0757-0271 | 2 | 2 | RESISTOR 124K 1% .125W F TC=0+-100 | 24546 | C4-1/8-T0-1243-F |
| A9R7 | 0698-6661 | 0 | 1 | RESISTOR 11.11K .25% .125W F TC=0+-100 | 28480 | 0698-6661 |
| A9R8 | 0698-5132 | 8 | | RESISTOR 990K .5% .25W F TC=0+-100 | 28480 | 0698-5132 |
| A9R9 | 0698-5131 | 7 | 2 | RESISTOR 900K .5% .25W F TC=0+-100 | 19701 | MF52C1/4-T0-9003-D |
| A9R10 | 0698-3359 | 7 | 1 | RESISTOR 12.7K 1% .125W F TC=0+-100 | 24546 | C4-1/8-T0-1272-F |
| A9R11 | 0698-6659 | 6 | 1 | RESISTOR 127K .25% .125W F TC=0+-100 | 28480 | 0698-6659 |
| A9R12 | 0698-5131 | 7 | | RESISTOR 900K .5% .25W F TC=0+-100 | 19701 | MF52C1/4-T0-9003-D |
| A9R13 | 0757-0430 | 5 | 1 | RESISTOR 2.21K 1% .125W F TC=0+-100 | 24546 | C4-1/8-T0-2211-F |
| A9R14 | 0698-4037 | 4 | 1 | RESISTOR 2.94K 1% .125W F TC=0+-100 | 24546 | C4-1/8-T0-2941-F |
| A9R16 | 0757-0824 | 1 | 1 | RESISTOR 2K 1% .5W F TC=0+-100 | 28480 | 0757-0824 |
| A9R17 | 0684-1041 | 1 | 6 | RESISTOR 100K 10% .25W FC TC=-400/+800 | 01121 | CB1041 |
| A9R18 | 0698-3581 | 7 | 2 | RESISTOR 13.7K 1% .125W F TC=0+-100 | 24546 | C4-1/8-T0-1372-F |
| A9R19 | 0698-3581 | 7 | | RESISTOR 13.7K 1% .125W F TC=0+-100 | 24546 | C4-1/8-T0-1372-F |
| A9R21 | 0698-4473 | 8 | 2 | RESISTOR 8.06K 1% .125W F TC=0+-100 | 24546 | C4-1/8-T0-8061-F |
| A9R22 | 0757-0442 | 9 | 5 | RESISTOR 10K 1% .125W F TC=0+-100 | 24546 | C4-1/8-T0-1002-F |
| A9R23 | 0698-4421 | 6 | 2 | RESISTOR 249 1% .125W F TC=0+-100 | 24546 | C4-1/8-T0-249R-F |
| A9R24 | 0698-3193 | 7 | 1 | RESISTOR 10K .25% .125W F TC=0+-50 | 28480 | 0698-3193 |
| A9R25 | 0698-6862 | 3 | 1 | RESISTOR 1.153K .25% .125W F TC=0+-50 | 28480 | 0698-6862 |
| A9R26 | 0698-4486 | 3 | 3 | RESISTOR 24.9K 1% .125W F TC=0+-100 | 24546 | C4-1/8-T0-2492-F |
| A9R27 | 0698-3382 | 6 | 2 | RESISTOR 5.49K 1% .125W F TC=0+-100 | 24546 | C4-1/8-T0-5491-F |
| A9R28 | 0757-0407 | 6 | 5 | RESISTOR 200 1% .125W F TC=0+-100 | 24546 | C4-1/8-T0-201-F |
| A9R29 | 0698-4464 | 7 | 1 | RESISTOR 887 1% .125W F TC=0+-100 | 24546 | C4-1/8-T0-887R-F |
| A9R31 | 0684-1041 | 1 | | RESISTOR 100K 10% .25W FC TC=-400/+800 | 01121 | CB1041 |
| A9R32 | 0757-0448 | 5 | 1 | RESISTOR 18.2K 1% .125W F TC=0+-100 | 24546 | C4-1/8-T0-1822-F |
| A9R33 | 0684-4701 | 6 | 3 | RESISTOR 47 10% .25W FC TC=-400/+500 | 01121 | CB4701 |
| A9R34 | 0757-0407 | 6 | | RESISTOR 200 1% .125W F TC=0+-100 | 24546 | C4-1/8-T0-201-F |
| A9R35 | 0698-3488 | 3 | 1 | RESISTOR 442 1% .125W F TC=0+-100 | 24546 | C4-1/8-T0-442R-F |
| A9R36 | 0684-1041 | 1 | | RESISTOR 100K 10% .25W FC TC=-400/+800 | 01121 | CB1041 |
| A9R37 | 0757-0442 | 9 | | RESISTOR 10K 1% .125W F TC=0+-100 | 24546 | C4-1/8-T0-1002-F |
| A9R38 | 0757-0278 | 9 | 2 | RESISTOR 1.78K 1% .125W F TC=0+-100 | 24546 | C4-1/8-T0-1781-F |
| A9R39 | 0698-6780 | 4 | 1 | RESISTOR 5.62K .25% .125W F TC=0+-50 | 28480 | 0698-6780 |
| A9R40 | 0684-1041 | 1 | | RESISTOR 100K 10% .25W FC TC=-400/+800 | 01121 | CB1041 |
| A9R41 | 0698-6823 | 6 | 1 | RESISTOR 2.61K .25% .125W F TC=0+-100 | 19701 | MF0C1/8-T0-2611-C |
| A9R42 | 0698-4473 | 8 | | RESISTOR 8.06K 1% .125W F TC=0+-100 | 24546 | C4-1/8-T0-8061-F |
| A9R43 | 0698-3495 | 2 | 1 | RESISTOR 866 1% .125W F TC=0+-100 | 24546 | C4-1/8-T0-866R-F |
| A9R44 | 0757-0424 | 7 | 1 | RESISTOR 1.1K 1% .125W F TC=0+-100 | 24546 | C4-1/8-T0-1101-F |
| A9R45 | 0757-0442 | 9 | | RESISTOR 10K 1% .125W F TC=0+-100 | 24546 | C4-1/8-T0-1002-F |
| A9R46 | 0757-0442 | 9 | | RESISTOR 10K 1% .125W F TC=0+-100 | 24546 | C4-1/8-T0-1002-F |
| A9R47 | 0698-3382 | 6 | | RESISTOR 5.49K 1% .125W F TC=0+-100 | 24546 | C4-1/8-T0-5491-F |
| A9R48 | 0757-0407 | 6 | | RESISTOR 200 1% .125W F TC=0+-100 | 24546 | C4-1/8-T0-201-F |
| A9R49 | 0698-4483 | 0 | 1 | RESISTOR 18.7K 1% .125W F TC=0+-100 | 24546 | C4-1/8-T0-1872-F |
| A9R50 | 0683-1025 | 9 | 5 | RESISTOR 1K 5% .25W FC TC=-400/+600 | 01121 | CB1025 |
| A9R51 | 0698-4421 | 6 | | RESISTOR 249 1% .125W F TC=0+-100 | 24546 | C4-1/8-T0-249R-F |
| A9R52 | 0684-1041 | 1 | | RESISTOR 100K 10% .25W FC TC=-400/+800 | 01121 | CB1041 |
| A9R53 | 0757-0278 | 9 | | RESISTOR 1.78K 1% .125W F TC=0+-100 | 24546 | C4-1/8-T0-1781-F |
| A9R54 | 0757-0407 | 6 | | RESISTOR 200 1% .125W F TC=0+-100 | 24546 | C4-1/8-T0-201-F |
| A9R55 | 0698-3327 | 9 | 1 | RESISTOR 3.92K .5% .125W F TC=0+-100 | 03888 | PME55-1/8-T0-3921-D |
| A9R56 | 0698-4518 | 2 | 1 | RESISTOR 137K 1% .125W F TC=0+-100 | 24546 | C4-1/8-T0-1373-F |
| A9R57 | 0698-4492 | 1 | 1 | RESISTOR 32.4K 1% .125W F TC=0+-100 | 24546 | C4-1/8-T0-3242-F |
| A9R58 | 0698-4055 | 2 | | RESISTOR 1K .25% .125W F TC=0+-100 | 03888 | PME55-1/8-T0-1001-C |
| A9R59 | 0698-3497 | 4 | 1 | RESISTOR 6.04K 1% .125W F TC=0+-100 | 24546 | C4-1/8-T0-604R-F |

See introduction to this section for ordering information
*Indicates factory selected value

Replaceable Parts

## Table 6-3. Replaceable Parts (Cont'd).

| Reference Designation | HP Part Number | C D | Qty | Description | Mfr Code | Mfr Part Number |
|---|---|---|---|---|---|---|
| A9R61 | 0698-4488 | 5 | 1 | RESISTOR 26.7K 1% .125W F TC=0+-100 | 24546 | C4-1/8-T0-2672-F |
| A9R62 | 0698-7417 | 6 | 1 | RESISTOR 69.8K .25% .125W F TC=0+-100 | 19701 | MF4C1/8-T0-6982-C |
| A9R63 | 0757-0407 | 6 | | RESISTOR 200 1% .125W F TC=0+-100 | 24546 | C4-1/8-T0-201-F |
| A9R64 | 0757-0442 | 9 | | RESISTOR 10K 1% .125W F TC=0+-100 | 24546 | C4-1/8-T0-1002-F |
| A9R65 | 0757-0161 | 9 | 4 | RESISTOR 604 1% .125W F TC=0+-100 | 24546 | C4-1/8-T0-604R-F |
| A9R66 | 0698-4422 | 7 | 1 | RESISTOR 1.27K 1% .125W F TC=0+-100 | 24546 | C4-1/8-T0-1271-F |
| A9R67 | 0698-4202 | 1 | 2 | RESISTOR 8.87K 1% .125W F TC=0+-100 | 24546 | C4-1/8-T0-8871-F |
| | 0757-0283 | 6 | 2 | RESISTOR 2K 1% .125W F TC=0+-100 | 24546 | C4-1/8-T0-2001-F |
| A9R68 | 0757-0976 | 4 | 2 | RESISTOR 150K 2% .125W F TC=0+-100 | 24546 | C4-1/8-T0-1502-G |
| A9R71 | 0757-0438 | 3 | 7 | RESISTOR 5.11K 1% .125W F TC=0+-100 | 24546 | C4-1/8-T0-5111-F |
| A9R72 | 0757-0283 | 6 | | RESISTOR 2K 1% .125W F TC=0+-100 | 24546 | C4-1/8-T0-2001-F |
| A9R73 | 0698-4202 | 1 | | RESISTOR 8.87K 1% .125W F TC=0+-100 | 24546 | C4-1/8-T0-8871-F |
| A9R74 | 0757-0976 | 4 | | RESISTOR 150K 2% .125W F TC=0+-100 | 24546 | C4-1/8-T0-1502-G |
| A9R75 | 0757-0453 | 2 | 1 | RESISTOR 30.1K 1% .125W F TC=0+-100 | 24546 | C4-1/8-T0-3012-F |
| A9R76 | 0757-0438 | 3 | | RESISTOR 5.11K 1% .125W F TC=0+-100 | 24546 | C4-1/8-T0-5111-F |
| A9R77 | 0757-0438 | 3 | | RESISTOR 5.11K 1% .125W F TC=0+-100 | 24546 | C4-1/8-T0-5111-F |
| A9R78 | 0683-1025 | 9 | | RESISTOR 1K 5% .25W FC TC=-400/+600 | 01121 | CB1025 |
| A9R79 | 0757-0434 | 9 | 1 | RESISTOR 3.65K 1% .125W F TC=0+-100 | 24546 | C4-1/8-T0-3651-F |
| A9R81 | 0698-3437 | 2 | 3 | RESISTOR 133 1% .125W F TC=0+-100 | 24546 | C4-1/8-T0-133R-F |
| A9R82 | 0698-3437 | 2 | | RESISTOR 133 1% .125W F TC=0+-100 | 24546 | C4-1/8-T0-133R-F |
| A9R83 | 0698-3437 | 2 | | RESISTOR 133 1% .125W F TC=0+-100 | 24546 | C4-1/8-T0-133R-F |
| A9R84 | 0757-0404 | 3 | 4 | RESISTOR 130 1% .125W F TC=0+-100 | 24546 | C4-1/8-T0-131-F |
| A9R85 | 0757-0404 | 3 | | RESISTOR 130 1% .125W F TC=0+-100 | 24546 | C4-1/8-T0-131-F |
| A9R86 | 0757-0404 | 3 | | RESISTOR 130 1% .125W F TC=0+-100 | 24546 | C4-1/8-T0-131-F |
| A9R87 | 0757-0404 | 3 | | RESISTOR 130 1% .125W F TC=0+-100 | 24546 | C4-1/8-T0-131-F |
| A9R88 | 0698-3446 | 3 | 1 | RESISTOR 383 1% .125W F TC=0+-100 | 24546 | C4-1/8-T0-383R-F |
| A9R89 | 0757-0438 | 3 | | RESISTOR 5.11K 1% .125W F TC=0+-100 | 24546 | C4-1/8-T0-5111-F |
| A9R91 | 0757-0161 | 9 | | RESISTOR 604 1% .125W F TC=0+-100 | 24546 | C4-1/8-T0-604R-F |
| A9R92 | 0698-4441 | 0 | 2 | RESISTOR 3.74K 1% .125W F TC=0+-100 | 24546 | C4-1/8-T0-3741-F |
| A9R93 | 0698-4020 | 1 | 1 | RESISTOR 9.53K 1% .125W F TC=0+-100 | 24546 | C4-1/8-T0-9531-F |
| A9R94 | 0757-0435 | 0 | 3 | RESISTOR 3.92K 1% .125W F TC=0+-100 | 24546 | C4-1/8-T0-3921-F |
| A9R95 | 0757-0161 | 9 | | RESISTOR 604 1% .125W F TC=0+-100 | 24546 | C4-1/8-T0-604R-F |
| A9R96 | 0757-0435 | 0 | | RESISTOR 3.92K 1% .125W F TC=0+-100 | 24546 | C4-1/8-T0-3921-F |
| A9R97 | 0757-0280 | 3 | 2 | RESISTOR 1K 1% .125W F TC=0+-100 | 24546 | C4-1/8-T0-1001-F |
| A9R98 | 0698-4486 | 3 | | RESISTOR 24.9K 1% .125W F TC=0+-100 | 24546 | C4-1/8-T0-2492-F |
| A9R99 | 0757-0280 | 3 | | RESISTOR 1K 1% .125W F TC=0+-100 | 24546 | C4-1/8-T0-1001-F |
| A9R101 | 0698-4486 | 3 | | RESISTOR 24.9K 1% .125W F TC=0+-100 | 24546 | C4-1/8-T0-2492-F |
| A9R102 | 0757-0271 | 2 | | RESISTOR 124K 1% .125W F TC=0+-100 | 24546 | C4-1/8-T0-1243-F |
| A9R103 | 0757-0161 | 9 | | RESISTOR 604 1% .125W F TC=0+-100 | 24546 | C4-1/8-T0-604R-F |
| A9R104 | 0757-0401 | 0 | 1 | RESISTOR 100 1% .125W F TC=0+-100 | 24546 | C4-1/8-T0-101-F |
| A9R105 | 0757-0438 | 3 | | RESISTOR 5.11K 1% .125W F TC=0+-100 | 24546 | C4-1/8-T0-5111-F |
| A9R106 | 0757-0435 | 0 | | RESISTOR 3.92K 1% .125W F TC=0+-100 | 24546 | C4-1/8-T0-3921-F |
| A9R107 | 0698-3158 | 4 | 1 | RESISTOR 23.7K 1% .125W F TC=0+-100 | 24546 | C4-1/8-T0-2372-F |
| A9R108 | 0683-1025 | 9 | | RESISTOR 1K 5% .25W FC TC=-400/+600 | 01121 | CB1025 |
| A9R109 | 0757-0422 | 5 | 1 | RESISTOR 909 1% .125W F TC=0+-100 | 24546 | C4-1/8-T0-909R-F |
| A9R111 | 0698-4441 | 0 | | RESISTOR 3.74K 1% .125W F TC=0+-100 | 24546 | C4-1/8-T0-3741-F |
| A9R112 | 0757-0413 | 4 | 1 | RESISTOR 392 1% .125W F TC=0+-100 | 24546 | C4-1/8-T0-392R-F |
| A9R113 | 0683-2045 | 5 | 1 | RESISTOR 200K 5% .25W FC TC=-800/+900 | 01121 | CB2045 |
| A9R114 | 0684-1041 | 1 | | RESISTOR 100K 10% .25W FC TC=-400/+800 | 01121 | CB1041 |
| A9R115 | 0684-1031 | 9 | | RESISTOR 10K 10% .25W FC TC=-400/+700 | 01121 | CB1031 |
| A9R116 | 0698-3557 | 7 | | RESISTOR 806 1% .125W F TC=0+-100 | 24546 | C4-1/8-T0-806R-F |
| A9R117 | 0683-2045 | 5 | | RESISTOR 200K 5% .25W FC TC=-800/+900 | 01121 | CB2045 |
| A9R118 | 0684-1041 | 1 | | RESISTOR 100K 10% .25W FC TC=-400/+800 | 01121 | CB1041 |
| A9R119 | 0684-1031 | 9 | | RESISTOR 10K 10% .25W FC TC=-400/+700 | 01121 | CB1031 |
| A9R121 | 0698-3153 | 9 | 1 | RESISTOR 3.83K 1% .125W F TC=0+-100 | 24546 | C4-1/8-T0-3831-F |
| A9R122 | 0684-1011 | 5 | 1 | RESISTOR 100 10% .25W FC TC=-400/+500 | 01121 | CB1011 |
| A9R123 | 0684-4701 | 6 | | RESISTOR 47 10% .25W FC TC=-400/+500 | 01121 | CB4701 |
| A9R124 | 0683-1025 | 9 | | RESISTOR 1K 5% .25W FC TC=-400/+600 | 01121 | CB1025 |
| A9R125 | 0757-0438 | 3 | | RESISTOR 5.11K 1% .125W F TC=0+-100 | 24546 | C4-1/8-T0-5111-F |
| A9R126 | 0683-4715 | 0 | 2 | RESISTOR 470 5% .25W FC TC=-400/+600 | 01121 | CB4715 |
| A9R127 | 0757-0462 | 3 | 2 | RESISTOR 75K 1% .125W F TC=0+-100 | 24546 | C4-1/8-T0-7502-F |
| A9R128 | 0683-1025 | 9 | | RESISTOR 1K 5% .25W FC TC=-400/+600 | 01121 | CB1025 |
| A9R129 | 0684-4701 | 6 | | RESISTOR 47 10% .25W FC TC=-400/+500 | 01121 | CB4701 |
| A9R131 | 0757-0438 | 3 | | RESISTOR 5.11K 1% .125W F TC=0+-100 | 24546 | C4-1/8-T0-5111-F |
| A9R132 | 0683-4715 | 0 | | RESISTOR 470 5% .25W FC TC=-400/+600 | 01121 | CB4715 |
| A9R133 | 0757-0462 | 3 | | RESISTOR 75K 1% .125W F TC=0+-100 | 24546 | C4-1/8-T0-7502-F |
| A9S2 | 3100-2738 | 2 | 1 | SWITCH-ROTARY 1.031 STRUT CTR SPCG; 8 | 28480 | 3100-2738 |
| A9SW1 | 03580-61905 | 5 | 1 | SWITCH ASSEMBLY | 28480 | 03580-61905 |
| A9U1 | 1826-0044 | 5 | 1 | IC OP AMP GP DUAL 14-DIP-C | 07263 | UA739DC |
| A9U2 | 1820-0427 | 6 | 1 | IC MODULATOR TO-100 | 04713 | MC1496G |

See introduction to this section for ordering information
*Indicates factory selected value

## Table 6-3. Replaceable Parts (Cont'd).

| Reference Designation | HP Part Number | C D | Qty | Description | Mfr Code | Mfr Part Number |
|---|---|---|---|---|---|---|
| A11A1 | 03580-66531 | 3 | 1 | BOARD ASSEMBLY-HIGH VOLTAGE POWER SUPPLY | 28480 | 03580-66531 |
| A11A1C1 | 0150-0050 | 9 | 1 | CAPACITOR-FXD 1000PF +80-20% 1KVDC CER | 28480 | 0150-0050 |
| A11A1C2 | 0150-0012 | 3 | 3 | CAPACITOR-FXD .01UF +-20% 1KVDC CER | 56289 | C023A102J103M838 |
| A11A1C3 | 0150-0012 | 3 | | CAPACITOR-FXD .01UF +-20% 1KVDC CER | 56289 | C023A102J103M838 |
| A11A1C4 | 0160-3008 | 4 | 3 | CAPACITOR-FXD 4700PF +-20% 4KVDC CER | 28480 | 0160-3008 |
| A11A1C5 | 0160-3008 | 4 | | CAPACITOR-FXD 4700PF +-20% 4KVDC CER | 28480 | 0160-3008 |
| A11A1C6 | 0160-3008 | 4 | | CAPACITOR-FXD 4700PF +-20% 4KVDC CER | 28480 | 0160-3008 |
| A11A1CR1 | 1901-0033 | 2 | 7 | DIODE-GEN PRP 180V 200MA DO-7 | 28480 | 1901-0033 |
| A11A1CR2 | 1901-0033 | 2 | | DIODE-GEN PRP 180V 200MA DO-7 | 28480 | 1901-0033 |
| A11A1CR3 | 1901-0033 | 2 | | DIODE-GEN PRP 180V 200MA DO-7 | 28480 | 1901-0033 |
| A11A1CR4 | 1901-0033 | 2 | | DIODE-GEN PRP 180V 200MA DO-7 | 28480 | 1901-0033 |
| A11A1CR5 | 1901-0341 | 5 | 1 | DIODE-HV RECT 7.5KV 10MA 250NS | 28480 | 1901-0341 |
| A11A1R1 | 0757-0465 | 6 | 14 | RESISTOR 100K 1% .125W F TC=0+-100 | 24546 | C4-1/8-T0-1003-F |
| A11A1R2 | 2100-3358 | 3 | 1 | RESISTOR-TRMR 1M 20% C SIDE-ADJ 1-TRN | 28480 | 2100-3358 |
| A11A1R4 | 0683-1535 | 6 | 1 | RESISTOR 15K 5% .25W FC TC=-400/+800 | 01121 | CB1535 |
| A11A1R5 | 0683-3345 | 0 | 1 | RESISTOR 330K 5% .25W FC TC=-800/+900 | 01121 | CB3345 |
| A11A2 | 03580-66532 | 4 | 1 | BOARD ASSEMBLY-HIGH VOLTAGE POWER SUPPLY (DOES NOT INCLUDE A11A2T1) | 28480 | 03580-66532 |
| A11A2C1 | 0160-3859 | 3 | 2 | CAPACITOR-FXD 560PF +-20% 6KVDC CER | 28480 | 0160-3859 |
| A11A2C2 | 0160-3859 | 3 | | CAPACITOR-FXD 560PF +-20% 6KVDC CER | 28480 | 0160-3859 |
| A11A2C3 | 0150-0012 | 3 | | CAPACITOR-FXD .01UF +-20% 1KVDC CER | 56289 | C023A102J103M838 |
| A11A2C4 | 0160-3007 | 3 | 1 | CAPACITOR-FXD 4700PF +-20% 4KVDC CER | 28480 | 0160-3007 |
| A11A2C5 | 0160-2544 | 1 | 1 | CAPACITOR-FXD 270PF +-10% 1KVDC CER | 28480 | 0160-2544 |
| A11A2CR1 | 1902-3237 | 6 | 1 | DIODE-ZNR 20V 5% DO-35 PD=.4W TC=+.073% | 28480 | 1902-3237 |
| A11A2CR2 | 1902-3428 | 7 | 2 | DIODE-ZNR 100V 5% DO-7 PD=.4W TC=+.083% | 28480 | 1902-3428 |
| A11A2CR3 | 1902-3428 | 7 | | DIODE-ZNR 100V 5% DO-7 PD=.4W TC=+.083% | 28480 | 1902-3428 |
| A11A2CR4 | 1901-0033 | 2 | | DIODE-GEN PRP 180V 200MA DO-7 | 28480 | 1901-0033 |
| A11A2CR5 | 1901-0033 | 2 | | DIODE-GEN PRP 180V 200MA DO-7 | 28480 | 1901-0033 |
| A11A2CR6 | 1901-0033 | 2 | | DIODE-GEN PRP 180V 200MA DO-7 | 28480 | 1901-0033 |
| A11A2R1 | 0683-4725 | 2 | 2 | RESISTOR 4.7M 5% .25W FC TC=-400/+700 | 01121 | CB4725 |
| A11A2R2 | 0683-1065 | 7 | 1 | RESISTOR 10M 5% .25W FC TC=-900/+1100 | 01121 | CB1065 |
| A11A2R3 | 0683-1055 | 5 | 1 | RESISTOR 1M 5% .25W FC TC=-800/+900 | 01121 | CB1055 |
| A11A2R4 | 0683-4725 | 2 | | RESISTOR 4.7M 5% .25W FC TC=-400/+700 | 01121 | CB4725 |
| A11A2R5 | 0667-2751 | 8 | 1 | RESISTOR 2.7M 10% .5W CC TC=0+1000 | 01121 | EB2751 |
| A11A2R6 | 0698-8427 | 0 | 1 | RESISTOR 20M 10% 1W C TC=0+-250 | 28480 | 0698-8427 |
| A13 | 03580-66513 | 1 | 1 | BOARD ASSEMBLY-REFLECTION | 28480 | 03580-66513 |
| A13C1 | 0160-0168 | 1 | 1 | CAPACITOR-FXD .1UF +-10% 200VDC POLYE | 28480 | 0160-0168 |
| A13C2 | 0180-0291 | 3 | 2 | CAPACITOR-FXD 1UF+-10% 35VDC TA | 56289 | 150D105X9035A2 |
| A13C3 | 0180-0291 | 3 | | CAPACITOR-FXD 1UF+-10% 35VDC TA | 56289 | 150D105X9035A2 |
| A13CR1 | 1901-0040 | 1 | 12 | DIODE-SWITCHING 30V 50MA 2NS DO-35 | 28480 | 1901-0040 |
| A13CR2 | 1901-0040 | 1 | | DIODE-SWITCHING 30V 50MA 2NS DO-35 | 28480 | 1901-0040 |
| A13CR3 | 1901-0040 | 1 | | DIODE-SWITCHING 30V 50MA 2NS DO-35 | 28480 | 1901-0040 |
| A13CR4 | 1901-0040 | 1 | | DIODE-SWITCHING 30V 50MA 2NS DO-35 | 28480 | 1901-0040 |
| A13Q1 | 1854-0474 | 4 | 8 | TRANSISTOR NPN SI PD=310MW FT=100MHZ | 04713 | 2N5551 |
| A13Q2 | 1854-0474 | 4 | | TRANSISTOR NPN SI PD=310MW FT=100MHZ | 04713 | 2N5551 |
| A13Q3 | 1854-0474 | 4 | | TRANSISTOR NPN SI PD=310MW FT=100MHZ | 04713 | 2N5551 |
| A13Q4 | 1854-0474 | 4 | | TRANSISTOR NPN SI PD=310MW FT=100MHZ | 04713 | 2N5551 |
| A13Q5 | 1854-0071 | 7 | 5 | TRANSISTOR NPN SI PD=300MW FT=200MHZ | 28480 | 1854-0071 |
| A13Q6 | 1854-0071 | 7 | | TRANSISTOR NPN SI PD=300MW FT=200MHZ | 28480 | 1854-0071 |
| A13Q7 | 1854-0474 | 4 | | TRANSISTOR NPN SI PD=310MW FT=100MHZ | 04713 | 2N5551 |
| A13Q8 | 1854-0474 | 4 | | TRANSISTOR NPN SI PD=310MW FT=100MHZ | 04713 | 2N5551 |
| A13Q9 | 1854-0474 | 4 | | TRANSISTOR NPN SI PD=310MW FT=100MHZ | 04713 | 2N5551 |
| A13Q11 | 1854-0474 | 4 | | TRANSISTOR NPN SI PD=310MW FT=100MHZ | 04713 | 2N5551 |
| A13Q12 | 1854-0071 | 7 | | TRANSISTOR NPN SI PD=300MW FT=200MHZ | 28480 | 1854-0071 |
| A13Q13 | 1854-0071 | 7 | | TRANSISTOR NPN SI PD=300MW FT=200MHZ | 28480 | 1854-0071 |
| A13R1 | 2100-0558 | 9 | 2 | RESISTOR-TRMR 20K 10% C TOP-ADJ 1-TRN | 28480 | 2100-0558 |
| A13R2 | 2100-3252 | 6 | 2 | RESISTOR-TRMR 5K 10% C TOP-ADJ 1-TRN | 28480 | 2100-3252 |
| A13R3 | 2100-3253 | 7 | 1 | RESISTOR-TRMR 50K 10% C TOP-ADJ 1-TRN | 28480 | 2100-3253 |
| A13R4 | 2100-3252 | 6 | | RESISTOR-TRMR 5K 10% C TOP-ADJ 1-TRN | 28480 | 2100-3252 |
| A13R5 | 2100-0558 | 9 | | RESISTOR-TRMR 20K 10% C TOP-ADJ 1-TRN | 28480 | 2100-0558 |
| A13R6 | 0757-0469 | 0 | 8 | RESISTOR 150K 1% .125W F TC=0+-100 | 24546 | C4-1/8-T0-1503-F |
| A13R7 | 0757-0469 | 0 | | RESISTOR 150K 1% .125W F TC=0+-100 | 24546 | C4-1/8-T0-1503-F |
| A13R8 | 0757-0465 | 6 | | RESISTOR 100K 1% .125W F TC=0+-100 | 24546 | C4-1/8-T0-1003-F |
| A13R9 | 0757-0440 | 7 | 5 | RESISTOR 7.5K 1% .125W F TC=0+-100 | 24546 | C4-1/8-T0-7501-F |
| A13R11 | 0757-0442 | 9 | 14 | RESISTOR 10K 1% .125W F TC=0+-100 | 24546 | C4-1/8-T0-1002-F |
| A13R12 | 0757-0440 | 7 | | RESISTOR 7.5K 1% .125W F TC=0+-100 | 24546 | C4-1/8-T0-7501-F |
| A13R13 | 0757-0469 | 0 | | RESISTOR 150K 1% .125W F TC=0+-100 | 24546 | C4-1/8-T0-1503-F |
| A13R14 | 0757-0430 | 5 | 1 | RESISTOR 2.21K 1% .125W F TC=0+-100 | 24546 | C4-1/8-T0-2211-F |
| A13R15 | 0757-0429 | 2 | 1 | RESISTOR 1.82K 1% .125W F TC=0+-100 | 24546 | C4-1/8-T0-1821-F |
| A13R16 | 0757-0469 | 0 | | RESISTOR 150K 1% .125W F TC=0+-100 | 24546 | C4-1/8-T0-1503-F |

See introduction to this section for ordering information
*Indicates factory selected value

Replaceable Parts

## Table 6-3. Replaceable Parts (Cont'd).

| Reference Designation | HP Part Number | C D | Qty | Description | Mfr Code | Mfr Part Number |
|---|---|---|---|---|---|---|
| A13R17 | 0698-4481 | 8 | 2 | RESISTOR 16.5K 1% .125W F TC=0+-100 | 24546 | C4-1/8-T0-1652-F |
| A13R18 | 0698-4435 | 2 | 4 | RESISTOR 2.49K 1% .125W F TC=0+-100 | 24546 | C4-1/8-T0-2491-F |
| A13R19 | 0698-4435 | 2 | | RESISTOR 2.49K 1% .125W F TC=0+-100 | 24546 | C4-1/8-T0-2491-F |
| A13R21 | 0757-0469 | 0 | | RESISTOR 150K 1% .125W F TC=0+-100 | 24546 | C4-1/8-T0-1503-F |
| A13R22 | 0757-0469 | 0 | | RESISTOR 150K 1% .125W F TC=0+-100 | 24546 | C4-1/8-T0-1503-F |
| A13R23 | 0757-0465 | 6 | | RESISTOR 100K 1% .125W F TC=0+-100 | 24546 | C4-1/8-T0-1003-F |
| A13R24 | 0757-0440 | 7 | | RESISTOR 7.5K 1% .125W F TC=0+-100 | 24546 | C4-1/8-T0-7501-F |
| A13R25 | 0757-0442 | 9 | | RESISTOR 10K 1% .125W F TC=0+-100 | 24546 | C4-1/8-T0-1002-F |
| A13R26 | 0757-0440 | 7 | | RESISTOR 7.5K 1% .125W F TC=0+-100 | 24546 | C4-1/8-T0-7501-F |
| A13R27 | 0757-0469 | 0 | | RESISTOR 150K 1% .125W F TC=0+-100 | 24546 | C4-1/8-T0-1503-F |
| A13R28 | 0757-0469 | 0 | | RESISTOR 150K 1% .125W F TC=0+-100 | 24546 | C4-1/8-T0-1503-F |
| A13R29 | 0757-0449 | 6 | 3 | RESISTOR 20K 1% .125W F TC=0+-100 | 24546 | C4-1/8-T0-2002-F |
| A13R31 | 0698-3884 | 9 | 1 | RESISTOR 6.65K 1% .125W F TC=0+-100 | 24546 | C4-1/8-T0-6651-F |
| A13R32 | 0698-4481 | 8 | | RESISTOR 16.5K 1% .125W F TC=0+-100 | 24546 | C4-1/8-T0-1652-F |
| A13R33 | 0698-4435 | 2 | | RESISTOR 2.49K 1% .125W F TC=0+-100 | 24546 | C4-1/8-T0-2491-F |
| A13R34 | 0698-4435 | 2 | | RESISTOR 2.49K 1% .125W F TC=0+-100 | 24546 | C4-1/8-T0-2491-F |
| A13R35 | 0757-0467 | 8 | 3 | RESISTOR 121K 1% .125W F TC=0+-100 | 24546 | C4-1/8-T0-1213-F |
| A13R36 | 0757-0467 | 8 | | RESISTOR 121K 1% .125W F TC=0+-100 | 24546 | C4-1/8-T0-1213-F |
| A1S1 | 3101-1162 | 6 | 1 | SWITCH-SLIDE SPDT NS | 28480 | 3101-1162 |
| | 1251-3378 | 5 | 1 | CONNECTOR 10-PIN M POST TYPE | 28480 | 1251-3378 |
| A14 | 03580-66534 | 6 | 1 | BOARD ASSEMBLY-BANDWIDTH SWITCH | 28480 | 03580-66534 |
| A14C4 | 0180-0197 | 8 | 1 | CAPACITOR-FXD 2.2UF+-10% 20VDC TA | 56289 | 150D225X9020A2 |
| A14C5 | 0180-0373 | 2 | 1 | CAPACITOR-FXD .68UF+-10% 35VDC TA | 56289 | 150D684X9035A2 |
| A14C6 | 0180-1735 | 2 | 1 | CAPACITOR-FXD .22UF+-10% 35VDC TA | 56289 | 150D224X9035A2 |
| A14C7 | 0180-2050 | 6 | 1 | CAPACITOR-FXD .082UF+-10% 35VDC TA | 56289 | 150D823X9035A2 |
| A14C8 | 0180-1701 | 2 | 1 | CAPACITOR-FXD 6.8UF+-20% 6VDC TA | 56289 | 150D685X0006A2 |
| A14C9 | 0160-0162 | 5 | 1 | CAPACITOR-FXD .022UF +-10% 200VDC POLYE | 28480 | 0160-0162 |
| A14J1 | 1251-0561 | 2 | 2 | CONNECTOR 34-PIN F POST TYPE | 28480 | 1251-0561 |
| A14Q1 | 1855-0081 | 1 | 3 | TRANSISTOR J-FET N-CHAN D-MODE SI | 01295 | 2N5245 |
| A14R1 | 0698-3453 | 2 | 1 | RESISTOR 196K 1% .125W F TC=0+-100 | 24546 | C4-1/8-T0-1963-F |
| A14R2 | 0698-4488 | 5 | 1 | RESISTOR 26.7K 1% .125W F TC=0+-100 | 24546 | C4-1/8-T0-2672-F |
| A14R3 | 0698-3558 | 8 | 1 | RESISTOR 4.02K 1% .125W F TC=0+-100 | 24546 | C4-1/8-T0-4021-F |
| A14R4 | 0698-3519 | 1 | 2 | RESISTOR 12.4K 1% .125W F TC=0+-100 | 24546 | C4-1/8-T0-1242-F |
| A14R5 | 0698-3228 | 9 | 6 | RESISTOR 49.9K 1% .125W F TC=0+-100 | 28480 | 0698-3228 |
| A14R6 | 0757-0473 | 6 | 1 | RESISTOR 221K 1% .125W F TC=0+-100 | 24546 | C4-1/8-T0-2213-F |
| A14R7 | 0684-1051 | 3 | 1 | RESISTOR 1M 10% .25W FC TC=-800/+900 | 01121 | CB1051 |
| A14R8 | 0684-2251 | 7 | 1 | RESISTOR 2.2M 10% .25W FC TC=-900/+1100 | 01121 | CB2251 |
| A14R9 | 0684-1041 | 1 | 1 | RESISTOR 100K 10% .25W FC TC=-400/+800 | 01121 | CB1041 |
| A14R10 | 0684-3941 | 4 | 1 | RESISTOR 390K 10% .25W FC TC=-800/+900 | 01121 | CB3941 |
| A14R11 | 0698-5102 | 2 | 1 | RESISTOR 1.2M 10% .25W FC TC=-900/+1100 | 01121 | CB1251 |
| A14R12 | 0698-4443 | 2 | 1 | RESISTOR 4.53K 1% .125W F TC=0+-100 | 24546 | C4-1/8-T0-4531-F |
| A14R13 | 0757-0454 | 3 | 1 | RESISTOR 33.2K 1% .125W F TC=0+-100 | 24546 | C4-1/8-T0-3322-F |
| A14R14 | 0698-4506 | 8 | 1 | RESISTOR 73.2K 1% .125W F TC=0+-100 | 24546 | C4-1/8-T0-7322-F |
| A14R15 | 0698-3459 | 8 | 1 | RESISTOR 383K 1% .125W F TC=0+-100 | 28480 | 0698-3459 |
| A14R16 | 0698-4524 | 0 | 3 | RESISTOR 174K 1% .125W F TC=0+-100 | 24546 | C4-1/8-T0-1743-F |
| A14R17 | 0757-0442 | 9 | | RESISTOR 10K 1% .125W F TC=0+-100 | 24546 | C4-1/8-T0-1002-F |
| A14R18 | 0698-3441 | 8 | 1 | RESISTOR 215 1% .125W F TC=0+-100 | 24546 | C4-1/8-T0-215R-F |
| A14R19 | 0698-4427 | 2 | 1 | RESISTOR 1.65K 1% .125W F TC=0+-100 | 24546 | C4-1/8-T0-1651-F |
| A14R20 | 0698-4511 | 5 | 3 | RESISTOR 86.6K 1% .125W F TC=0+-100 | 24546 | C4-1/8-T0-8662-F |
| A14R21 | 0757-0456 | 5 | 2 | RESISTOR 43.2K 1% .125W F TC=0+-100 | 24546 | C4-1/8-T0-4322-F |
| A14R22 | 0757-0446 | 3 | 1 | RESISTOR 15K 1% .125W F TC=0+-100 | 24546 | C4-1/8-T0-1502-F |
| A14R31 | 0698-4511 | 5 | | RESISTOR 86.6K 1% .125W F TC=0+-100 | 24546 | C4-1/8-T0-8662-F |
| A14R32 | 0698-4500 | 2 | 2 | RESISTOR 57.6K 1% .125W F TC=0+-100 | 24546 | C4-1/8-T0-5762-F |
| A14R33 | 0757-0456 | 5 | | RESISTOR 43.2K 1% .125W F TC=0+-100 | 24546 | C4-1/8-T0-4322-F |
| A14R34 | 0757-0123 | 3 | 1 | RESISTOR 34.8K 1% .125W F TC=0+-100 | 28480 | 0757-0123 |
| A14R35 | 0698-3455 | 4 | 2 | RESISTOR 261K 1% .125W F TC=0+-100 | 24546 | C4-1/8-T0-2613-F |
| A14R36 | 0757-0468 | 9 | 1 | RESISTOR 130K 1% .125W F TC=0+-100 | 24546 | C4-1/8-T0-1303-F |
| A14R37 | 0698-7802 | 3 | 2 | RESISTOR 523K 1% .125W F TC=0+-100 | 28480 | 0698-7802 |
| A14R38 | 0757-0272 | 3 | 1 | RESISTOR 52.3K 1% .125W F TC=0+-100 | 24546 | C4-1/8-T0-5232-F |
| A14R39 | 0698-4502 | 4 | 1 | RESISTOR 64.9K 1% .125W F TC=0+-100 | 24546 | C4-1/8-T0-6492-F |
| A14R41 | 0698-3215 | 4 | 1 | RESISTOR 499K 1% .125W F TC=0+-100 | 28480 | 0698-3215 |
| A14R42 | 0698-3228 | 9 | | RESISTOR 49.9K 1% .125W F TC=0+-100 | 28480 | 0698-3228 |
| A14R43 | 0698-3279 | 0 | 2 | RESISTOR 4.99K 1% .125W F TC=0+-100 | 24546 | C4-1/8-T0-4991-F |
| A14R44 | 0698-4524 | 0 | | RESISTOR 174K 1% .125W F TC=0+-100 | 24546 | C4-1/8-T0-1743-F |
| A14R60 | 0757-0427 | 0 | 1 | RESISTOR 1.5K 1% .125W F TC=0+-100 | 24546 | C4-1/8-T0-1501-F |
| A14S1 | 03580-61901 | 1 | 1 | SWITCH ASSEMBLY | 28480 | 03580-61901 |
| A14S2 | 03580-61907 | 7 | 1 | SWITCH ASSEMBLY | 28480 | 03580-61907 |

See introduction to this section for ordering information
*Indicates factory selected value

## Table 6-3. Replaceable Parts (Cont'd).

| Reference Designation | HP Part Number | C D | Qty | Description | Mfr Code | Mfr Part Number |
|---|---|---|---|---|---|---|
| A15 | 03580-66535 | 7 | 1 | BOARD ASSEMBLY-SWEEP SWITCH | 28480 | 03580-66535 |
| A15CR1 | 1901-0040 | 1 | | DIODE-SWITCHING 30V 50MA 2NS DO-35 | 28480 | 1901-0040 |
| A15CR2 | 1901-0841 | 0 | 1 | DIODE-SCHOTTKY DO-35 | 28480 | HSCH-1001 |
| A15CR3 | 1990-0486 | 6 | 1 | LED-VISIBLE LUM-INT=1MCD IF=20MA-MAX | 28480 | 5082-4684 |
| A15CR4 | 1990-0487 | 7 | 1 | LED-VISIBLE LUM-INT=1MCD IF=20MA-MAX | 28480 | 5082-4584 |
| A15CR5 | 1990-0485 | 5 | 1 | LED-VISIBLE LUM-INT=800UCD IF=30MA-MAX | 28480 | 5082-4984 |
| A15J1 | 1251-0561 | 2 | | CONNECTOR 34-PIN F POST TYPE | 28480 | 1251-0561 |
| A15J2 | 03580-61613 | 2 | 1 | CABLE ASSEMBLY | 28480 | 03580-61613 |
| A15Q1 | 1854-0215 | 1 | 1 | TRANSISTOR NPN SI PD=350MW FT=300MHZ | 04713 | 2N3904 |
| A15Q2 | 1855-0081 | 1 | | TRANSISTOR J-FET N-CHAN D-MODE SI | 01295 | 2N5245 |
| A15Q3 | 1855-0081 | 1 | | TRANSISTOR J-FET N-CHAN D-MODE SI | 01295 | 2N5245 |
| A15Q4 | 1853-0036 | 2 | 5 | TRANSISTOR PNP SI PD=310MW FT=250MHZ | 28480 | 1853-0036 |
| A15R1 | 0698-7802 | 3 | | RESISTOR 523K 1% .125W F TC=0+-100 | 28480 | 0698-7802 |
| A15R2 | 0757-0403 | 2 | 1 | RESISTOR 121 1% .125W F TC=0+-100 | 24546 | C4-1/8-TO-121R-F |
| A15R3 | 0757-0410 | 1 | 1 | RESISTOR 301 1% .125W F TC=0+-100 | 24546 | C4-1/8-TO-301R-F |
| A15R4 | 0757-0161 | 9 | 1 | RESISTOR 604 1% .125W F TC=0+-100 | 24546 | C4-1/8-TO-604R-F |
| A15R5 | 0757-0274 | 5 | 1 | RESISTOR 1.21K 1% .125W F TC=0+-100 | 24546 | C4-1/8-TO-1213-F |
| A15R6 | 0757-0273 | 4 | 2 | RESISTOR 3.01K 1% .125W F TC=0+-100 | 24546 | C4-1/8-TO-3011-F |
| A15R7 | 0698-3497 | 4 | 2 | RESISTOR 6.04K 1% .125W F TC=0+-100 | 24546 | C4-1/8-TO-6041-F |
| A15R8 | 0757-0444 | 1 | 2 | RESISTOR 12.1K 1% .125W F TC=0+-100 | 24546 | C4-1/8-TO-1212-F |
| A15R9 | 0757-0453 | 2 | 1 | RESISTOR 30.1K 1% .125W F TC=0+-100 | 24546 | C4-1/8-TO-3012-F |
| A15R10 | 0698-3572 | 6 | 1 | RESISTOR 60.4K 1% .125W F TC=0+-100 | 24546 | C4-1/8-TO-6042-F |
| A15R11 | 0757-0467 | 8 | | RESISTOR 121K 1% .125W F TC=0+-100 | 24546 | C4-1/8-TO-1213-F |
| A15R12 | 0698-3499 | 6 | 1 | RESISTOR 40.2K 1% .125W F TC=0+-100 | 24546 | C4-1/8-TO-4022-F |
| A15R13 | 0698-3497 | 4 | | RESISTOR 6.04K 1% .125W F TC=0+-100 | 24546 | C4-1/8-TO-604R-F |
| A15R14 | 0757-0442 | 9 | | RESISTOR 10K 1% .125W F TC=0+-100 | 24546 | C4-1/8-TO-1002-F |
| A15R15 | 0757-0444 | 1 | | RESISTOR 12.1K 1% .125W F TC=0+-100 | 24546 | C4-1/8-TO-1212-F |
| A15R16 | 0698-5572 | 0 | 2 | RESISTOR 12.5K .5% .125W F TC=0+-100 | 24546 | C4-1/8-TO-1252-D |
| A15R17 | 0698-5572 | 0 | | RESISTOR 12.5K .5% .125W F TC=0+-100 | 24546 | C4-1/8-TO-1252-D |
| A15R18 | 0757-0442 | 9 | | RESISTOR 10K 1% .125W F TC=0+-100 | 24546 | C4-1/8-TO-1002-F |
| A15R19 | 2100-0668 | 2 | 1 | RESISTOR-VAR CONTROL CC 10K 10% LIN | 28480 | 2100-0668 |
| A15R20 | 0698-3519 | 1 | | RESISTOR 12.4K 1% .125W F TC=0+-100 | 24546 | C4-1/8-TO-1242-F |
| A15R21 | 0698-6758 | 6 | 1 | RESISTOR 12.5K .5% .125W F TC=0+-50 | 24546 | NC4-1/8-T2-1252-D |
| A15R22 | 0698-5580 | 0 | 1 | RESISTOR 25K .5% .125W F TC=0+-100 | 24546 | C4-1/8-TO-2502-D |
| A15R23 | 0698-5573 | 1 | 1 | RESISTOR 50K .5% .125W F TC=0+-100 | 24546 | C4-1/8-TO-5002-D |
| A15R24 | 0698-6292 | 3 | 1 | RESISTOR 125K .5% .125W F TC=0+-100 | 28480 | 0698-6292 |
| A15R25 | 0698-5581 | 1 | 1 | RESISTOR 250K .5% .125W F TC=0+-100 | 19701 | MFPC1/8-TO-2503-D |
| A15R30 | 0757-0486 | 1 | 1 | RESISTOR 750K 1% .125W F TC=0+-100 | 28480 | 0757-0486 |
| A15R31 | 0698-4489 | 6 | 1 | RESISTOR 28K 1% .125W F TC=0+-100 | 24546 | C4-1/8-TO-2802-F |
| A15R32 | 0684-3351 | 0 | 1 | RESISTOR 3.3M 10% .25W FC TC=-900/+1100 | 01121 | CB3351 |
| A15R41 | 0698-4524 | 0 | | RESISTOR 174K 1% .125W F TC=0+-100 | 24546 | C4-1/8-TO-1743-F |
| A15R42 | 0698-3455 | 4 | | RESISTOR 261K 1% .125W F TC=0+-100 | 24546 | C4-1/8-TO-2613-F |
| A15R43 | 0698-4500 | 2 | | RESISTOR 57.6K 1% .125W F TC=0+-100 | 24546 | C4-1/8-TO-5762-F |
| A15R44 | 0698-4511 | 5 | | RESISTOR 86.6K 1% .125W F TC=0+-100 | 24546 | C4-1/8-TO-8662-F |
| A15R50 | 0757-0442 | 9 | | RESISTOR 10K 1% .125W F TC=0+-100 | 24546 | C4-1/8-TO-1002-F |
| A15R51 | 0757-0442 | 9 | | RESISTOR 10K 1% .125W F TC=0+-100 | 24546 | C4-1/8-TO-1002-F |
| A15R53 | 0698-3160 | 8 | 1 | RESISTOR 31.6K 1% .125W F TC=0+-100 | 24546 | C4-1/8-TO-3162-F |
| A15R54 | 0757-0442 | 9 | | RESISTOR 10K 1% .125W F TC=0+-100 | 24546 | C4-1/8-TO-1002-F |
| A15R55 | 0683-1045 | 3 | 1 | RESISTOR 100K 5% .25W FC TC=-400/+800 | 01121 | CB1045 |
| A15R60 | 0698-3557 | 7 | 4 | RESISTOR 806 1% .125W F TC=0+-100 | 24546 | C4-1/8-TO-806R-F |
| A15R61 | 0757-0442 | 9 | | RESISTOR 10K 1% .125W F TC=0+-100 | 24546 | C4-1/8-TO-1002-F |
| A15R62 | 0698-3557 | 7 | | RESISTOR 806 1% .125W F TC=0+-100 | 24546 | C4-1/8-TO-806R-F |
| A15R63 | 0698-4123 | 5 | 1 | RESISTOR 499 1% .125W F TC=0+-100 | 24546 | C4-1/8-TO-499R-F |
| A15R64 | 0698-3152 | 8 | 1 | RESISTOR 3.48K 1% .125W F TC=0+-100 | 24546 | C4-1/8-TO-3481-F |
| A15S1 | 03580-61903 | 3 | 1 | SWITCH ASSEMBLY-SPAN | 28480 | 03580-61903 |
| A15S2 | 03580-61908 | 8 | 1 | SWITCH ASSEMBLY-MODE | 28480 | 03580-61908 |
| A15S3 | 3101-0199 | 7 | 1 | SWITCH-SL DPDT MINTR .5A 125VAC/DC | 28480 | 3101-0199 |
| A15U1 | 1826-0043 | 4 | 3 | IC OP AMP GP TO-99 | 01928 | CA307T |
| A15U2 | 1826-0043 | 4 | | IC OP AMP GP TO-99 | 01928 | CA307T |
| A16 | 03580-66536 | 8 | 1 | BOARD ASSEMBLY-PCM | 28480 | 03580-66536 |
| A16C1 | 0180-0104 | 7 | 2 | CAPACITOR-FXD 200UF+75-10% 16VDC AL | 56289 | 30D207G016DF2 |
| A16C2 | 0180-0104 | 7 | | CAPACITOR-FXD 200UF+75-10% 16VDC AL | 56289 | 30D207G016DF2 |
| A16C3 | 0160-4571 | 8 | 7 | CAPACITOR-FXD .1UF +80-20% 50VDC CER | 28480 | 0160-4571 |
| A16C30 | 0160-2672 | 6 | 1 | CAPACITOR-FXD .047UF +-5% 80VDC POLYE | 28480 | 0160-2672 |
| A16C31 | 0160-4571 | 8 | | CAPACITOR-FXD .1UF +80-20% 50VDC CER | 28480 | 0160-4571 |
| A16C32 | 0160-4571 | 8 | | CAPACITOR-FXD .1UF +80-20% 50VDC CER | 28480 | 0160-4571 |
| A16C34 | 0180-0106 | 9 | 1 | CAPACITOR-FXD 60UF+-20% 6VDC TA | 56289 | 150D606X0006B2 |
| A16C35 | 0180-0339 | 0 | 1 | CAPACITOR-FXD 50UF+75-10% 16VDC AL | 56289 | 30D506G016CB2 |
| A16C40 | 0160-4532 | 1 | 1 | CAPACITOR-FXD 1000PF +-20% 50VDC CER | 28480 | 0160-4532 |
| A16C41 | 0160-4571 | 8 | | CAPACITOR-FXD .1UF +80-20% 50VDC CER | 28480 | 0160-4571 |

See introduction to this section for ordering information
*Indicates factory selected value

Replaceable Parts

## Table 6-3. Replaceable Parts (Cont'd).

| Reference Designation | HP Part Number | C D | Qty | Description | Mfr Code | Mfr Part Number |
|---|---|---|---|---|---|---|
| A16C83 | 0160-4571 | 8 | | CAPACITOR-FXD .1UF +80-20% 50VDC CER | 28480 | 0160-4571 |
| A16CR1 | 1902-3062 | 5 | 1 | DIODE-ZNR 3.92V 5% DO-35 PD=.4W | 28480 | 1902-3062 |
| A16CR2 | 1901-0040 | 1 | | DIODE-SWITCHING 30V 50MA 2NS DO-35 | 28480 | 1901-0040 |
| A16CR3 | 1901-0040 | 1 | | DIODE-SWITCHING 30V 50MA 2NS DO-35 | 28480 | 1901-0040 |
| A16CR4 | 1901-0040 | 1 | | DIODE-SWITCHING 30V 50MA 2NS DO-35 | 28480 | 1901-0040 |
| A16CR5 | 1901-0040 | 1 | | DIODE-SWITCHING 30V 50MA 2NS DO-35 | 28480 | 1901-0040 |
| A16CR6 | 1901-0040 | 1 | | DIODE-SWITCHING 30V 50MA 2NS DO-35 | 28480 | 1901-0040 |
| A16CR30 | 1901-0040 | 1 | | DIODE-SWITCHING 30V 50MA 2NS DO-35 | 28480 | 1901-0040 |
| A16CR31 | 1901-0040 | 1 | | DIODE-SWITCHING 30V 50MA 2NS DO-35 | 28480 | 1901-0040 |
| A16CR32 | 1902-0777 | 3 | 1 | DIODE-ZNR 1N825 6.2V 5% DO-7 PD=.4W | 04713 | 1N825 |
| A16L1 | 9100-1644 | 3 | 1 | INDUCTORRF-CH-MLD 330UH 5% .2DX.45LG | 28480 | 9100-1644 |
| A16L2 | 9100-0541 | 7 | 1 | INDUCTORRF-CH-MLD 250UH 10% .25DX.5LG | 28480 | 9100-0541 |
| A16Q2 | 1854-0071 | 7 | | TRANSISTOR NPN SI PD=300MW FT=200MHZ | 28480 | 1854-0071 |
| A16Q3 | 1853-0036 | 2 | | TRANSISTOR PNP SI PD=310MW FT=250MHZ | 28480 | 1853-0036 |
| A16Q4 | 1853-0036 | 2 | | TRANSISTOR PNP SI PD=310MW FT=250MHZ | 28480 | 1853-0036 |
| A16Q5 | 1853-0036 | 2 | | TRANSISTOR PNP SI PD=310MW FT=250MHZ | 28480 | 1853-0036 |
| A16Q30 | 1855-0386 | 9 | 1 | TRANSISTOR J-FET 2N4302 N-CHAN D-MODE | 04713 | 2N4302 |
| A16R2 | 0757-0472 | 5 | 1 | RESISTOR 200K 1% .125W F TC=0+-100 | 24546 | C4-1/8-T0-2003-F |
| A16R3 | 0757-0449 | 6 | | RESISTOR 20K 1% .125W F TC=0+-100 | 24546 | C4-1/8-T0-2002-F |
| A16R4 | 0757-0273 | 4 | | RESISTOR 3.01K 1% .125W F TC=0+-100 | 24546 | C4-1/8-T0-3011-F |
| A16R5 | 0757-0465 | 6 | | RESISTOR 100K 1% .125W F TC=0+-100 | 24546 | C4-1/8-T0-1003-F |
| A16R6 | 0757-0465 | 6 | | RESISTOR 100K 1% .125W F TC=0+-100 | 24546 | C4-1/8-T0-1003-F |
| A16R7 | 0757-0463 | 4 | 2 | RESISTOR 82.5K 1% .125W F TC=0+-100 | 24546 | C4-1/8-T0-8252-F |
| A16R8 | 0698-3493 | 0 | 1 | RESISTOR 4.12K 1% .125W F TC=0+-100 | 24546 | C4-1/8-T0-4121-F |
| A16R9 | 0757-0457 | 6 | 1 | RESISTOR 47.5K 1% .125W F TC=0+-100 | 24546 | C4-1/8-T0-4752-F |
| A16R10 | 0698-3228 | 9 | | RESISTOR 49.9K 1% .125W F TC=0+-100 | 28480 | 0698-3228 |
| A16R11 | 0757-0465 | 6 | | RESISTOR 100K 1% .125W F TC=0+-100 | 24546 | C4-1/8-T0-1003-F |
| A16R12 | 0757-0463 | 4 | | RESISTOR 82.5K 1% .125W F TC=0+-100 | 24546 | C4-1/8-T0-8252-F |
| A16R13 | 0757-0465 | 6 | | RESISTOR 100K 1% .125W F TC=0+-100 | 24546 | C4-1/8-T0-1003-F |
| A16R14 | 0683-1555 | 0 | 1 | RESISTOR 1.5M 5% .25W FC TC=-900/+1100 | 01121 | CB1555 |
| A16R15 | 0757-0465 | 6 | | RESISTOR 100K 1% .125W F TC=0+-100 | 24546 | C4-1/8-T0-1003-F |
| A16R16 | 0698-3157 | 3 | 1 | RESISTOR 19.6K 1% .125W F TC=0+-100 | 24546 | C4-1/8-T0-1962-F |
| A16R17 | 0683-2235 | 5 | 1 | RESISTOR 22K 5% .25W FC TC=-400/+800 | 01121 | CB2235 |
| A16R18 | 0698-3557 | 7 | | RESISTOR 806 1% .125W F TC=0+-100 | 24546 | C4-1/8-T0-806R-F |
| A16R20 | 0683-1035 | 1 | 1 | RESISTOR 10K 5% .25W FC TC=-400/+700 | 01121 | CB1035 |
| A16R21 | 0757-0465 | 6 | | RESISTOR 100K 1% .125W F TC=0+-100 | 24546 | C4-1/8-T0-1003-F |
| A16R22 | 0757-0465 | 6 | | RESISTOR 100K 1% .125W F TC=0+-100 | 24546 | C4-1/8-T0-1003-F |
| A16R23 | 0698-3228 | 9 | | RESISTOR 49.9K 1% .125W F TC=0+-100 | 28480 | 0698-3228 |
| A16R24 | 0757-0465 | 6 | | RESISTOR 100K 1% .125W F TC=0+-100 | 24546 | C4-1/8-T0-1003-F |
| A16R30 | 0757-0440 | 7 | | RESISTOR 7.5K 1% .125W F TC=0+-100 | 24546 | C4-1/8-T0-7501-F |
| A16R31 | 0757-0449 | 6 | | RESISTOR 20K 1% .125W F TC=0+-100 | 24546 | C4-1/8-T0-2002-F |
| A16R32 | 0757-0415 | 6 | 9 | RESISTOR 475 1% .125W F TC=0+-100 | 24546 | C4-1/8-T0-475R-F |
| A16R33 | 0698-3382 | 6 | 1 | RESISTOR 5.49K 1% .125W F TC=0+-100 | 24546 | C4-1/8-T0-5491-F |
| A16R34 | 0698-5673 | 2 | 1 | RESISTOR 3.9K 1% .125W F TC=0+-25 | 28480 | 0698-5673 |
| A16R35 | 0698-3279 | 0 | | RESISTOR 4.99K 1% .125W F TC=0+-100 | 24546 | C4-1/8-T0-4991-F |
| A16R36 | 0757-0407 | 6 | 1 | RESISTOR 200 1% .125W F TC=0+-100 | 24546 | C4-1/8-T0-201-F |
| A16R40 | 0698-3228 | 9 | | RESISTOR 49.9K 1% .125W F TC=0+-100 | 28480 | 0698-3228 |
| A16R41 | 0698-7332 | 4 | 2 | RESISTOR 1M 1% .125W F TC=0+-100 | 28480 | 0698-7332 |
| A16R42 | 0757-0199 | 3 | 1 | RESISTOR 21.5K 1% .125W F TC=0+-100 | 24546 | C4-1/8-T0-2152-F |
| A16R43 | 0698-7332 | 4 | | RESISTOR 1M 1% .125W F TC=0+-100 | 28480 | 0698-7332 |
| A16R45 | 0698-4542 | 2 | 1 | RESISTOR 453K 1% .125W F TC=0+-100 | 28480 | 0698-4542 |
| A16R50 | 0698-3228 | 9 | | RESISTOR 49.9K 1% .125W F TC=0+-100 | 28480 | 0698-3228 |
| A16R51 | 0757-0442 | 9 | | RESISTOR 10K 1% .125W F TC=0+-100 | 24546 | C4-1/8-T0-1002-F |
| A16R52 | 2100-3352 | 7 | 1 | RESISTOR-TRMR 1K 10% C SIDE-ADJ 1-TRN | 28480 | 2100-3352 |
| A16U1 | 1826-0043 | 4 | | IC OP AMP GP TO-99 | 01928 | CA3077 |
| A16U2 | 1826-0138 | 8 | 1 | IC COMPARATOR GP QUAD 14-DIP-P | 01295 | LM339N |
| A16U8 | 1826-0304 | 0 | 2 | IC OP AMP TO-99 | 27014 | LF355M |
| A16U9 | 1826-0304 | 0 | | IC OP AMP TO-99 | 27014 | LF355M |
| A16W1 | 03580-61612 | 1 | 2 | CABLE ASSEMBLY | 28480 | 03580-61612 |
| A16W2 | 03580-61612 | 1 | | CABLE ASSEMBLY | 28480 | 03580-61612 |
| | 1251-5240 | 4 | 1 | CONNECTOR 20-PIN M POST TYPE | 28480 | 1251-5240 |

See introduction to this section for ordering information
*Indicates factory selected value

Replaceable Parts

## Table 6-3. Replaceable Parts (Cont'd).

| Reference Designation | HP Part Number | C D | Qty | Description | Mfr Code | Mfr Part Number |
|---|---|---|---|---|---|---|
| A18 Δ1 | 03581-66518 | | 1 | BOARD ASSY: INPUT, BALANCED (FOR OPTION 002 ONLY) | 28480 | 03580-66518 |
| A18C1 | 0180-0091 | | 2 | C:FXD 10UF +50 -10% 100 VDC AL | 56289 | 30D106F100DC2 |
| A18C4 | 0180-0091 | | | C:FXD 10UF +50 -10% 100 VDC AL | 56289 | 30D106F100DC2 |
| A18C5 | 0160-2206 | | | C:FXD 160PF 5% 300 VDCW | 28480 | 0160-2206 |
| A18C6 | 0140-0204 | | 1 | C:FXD 47PF 5% 500 VDCW | 72136 | DM15E470J0500WV1CR |
| A18J1 | 1251-2969 | | | CONN:PHONO, SINGLE JACK | 27264 | 15-24-0501 |
| A18J2 | 1251-3638 | | 1 | CONN:POST TYPE | 27264 | 09-65-1061 |
| A18R1 | 0698-4882 | | 1 | R:FXD 976 OHM 1% .5 W F TUBULAR | 24546 | NA6 |
| A18R2 | 0698-5874 | | 1 | R:FXD 639 OHM 1% .5 W F TUBULAR | 24546 | NA6 |
| A18R3* | 0757-0284 | | 1 | R:FXD 150 OHM 1% .125 W F TUBULAR FACTORY SELECTED PART | 24546 | C4-1/8-TO-151-F |
| A18R4 | 0757-0472 | | 1 | F:FXD 200K 1% .125 W F TUBULAR | 24546 | C4-1/8-TO-2003-F |
| A18R5 | 0698-4308 | | | F:FXD 16.9K 1% .125 W F TUBULAR | 16299 | C4-1/8-TO 1692-F |
| A18T1 | 9100-1460 | | 1 | TRANSFORMER AUDIO | 28480 | 9100-1460 |
| A20 | 0960-0444 | | 1 | POWER INPUT MODULE | 28480 | 0960-0444 |
| A33 | 03580-66533 | 5 | 1 | BOARD ASSEMBLY-DISPLAY, FCM | 28480 | 03580-66533 |
| A33C1 | 0160-4571 | 8 | | CAPACITOR-FXD .1UF +80 -20% 50 VDC CER | 28480 | 0160-4571 |
| A33C2 | 0160-5104 | 5 | 1 | CAPACITOR-FXD 3.9PF 5% | 28480 | 0160-5104 |
| A33C4 | 0160-2205 | 1 | 1 | CAPACITOR-FXD 120PF +-5% 300 VDC MICA | 28480 | 0160-2205 |
| A33C5 | 0160-4571 | 8 | | CAPACITOR-FXD .2UF +80 -20% 50 VDC CER | 28480 | 0160-4571 |
| A33CR1 | 1910-0016 | 0 | 1 | DIODE-GE 60V 60 MA 1 US DO-7 | 28480 | 1910-0016 |
| A33L1 | 9100-1650 | 1 | 1 | INDUCTOR RF-CH-MLD 680 UH 5% .2DX.45LG | 28480 | 9100-1650 |
| A33Q1 | 1853-0036 | 2 | | TRANSISTOR PNP SI PD=310 MW FT=250 MHZ | 28480 | 1853-0036 |
| A33R1 | 0698-4517 | 1 | 1 | RESISTOR 127K 1% .125 W F TC=0+-100 | 24546 | C4-1/8-TO-1273-F |
| A33R2 | 0757-0465 | 6 | | RESISTOR 100K 1% .125 W F TC=0+-100 | 24546 | C4-1/8-TO-1003-F |
| A33R3 | 0757-0465 | 6 | | RESISTOR 100K 1% .125 W F TC=0+-100 | 24546 | C4-1/8-TO-1003-F |
| A33R4 | 0757-0401 | 0 | 3 | RESISTOR 100 1% .125 W F TC=0+-100 | 24546 | C4-1/8-TO-101-F |
| A33R5 | 0757-0435 | 0 | 1 | RESISTOR 3.92K 1% .125 W F TC=0+-100 | 24546 | C4-1/8-TO-3921-F |
| A33R6 | 0757-0401 | 0 | | RESISTOR 100 1% .125 W F TC=0+-100 | 24546 | C4-1/8-TO-101-F |
| A33R7 | 0698-3557 | 7 | | RESISTOR 806 1% .125 W F TC=0+-100 | 24546 | C4-1/8-TO-806R-F |
| A33R8 | 0698-3149 | 3 | 1 | RESISTOR 255K 1% .125 W F TC=0+-100 | 24546 | C4-1/8-TO-2553-F |
| A33R9 | 0757-0401 | 1 | | RESISTOR 100 1% .125 W F TC=0+-100 | 24546 | C4-1/8-TO-101-F |
| A33R10 | 0757-0442 | 9 | | RESISTOR 10K 1% .125 W F TC=0+-100 | 24546 | C4-1/8-TO-1002-F |
| A33R11 | 0757-0465 | 6 | | RESISTOR 100K 1% .125 W F TC=0+-100 | 24546 | C4-1/8-TO-1003-F |
| A33R12 | 0757-0442 | 9 | | RESISTOR 10K 1% .125 W F TC=0+-100 | 24546 | C4-1/8-TO-1002-F |
| A33R13 | 0757-0415 | 6 | | RESISTOR 475 1% .125 W F TC=0+-100 | 24546 | C4-1/8-TO-475R-F |
| A33R14 | 1757-0415 | 6 | | RESISTOR 475 1% .125 W F TC=0+-100 | 24546 | C4-1/8-TO-475R-F |
| A33R15 | 0757-0415 | 6 | | RESISTOR 475 1% .125 W F TC=0+-100 | 24546 | C4-1/8-TO-475R-F |
| A33R16 | 0757-0415 | 6 | | RESISTOR 475 1% .125 W F TC=0+-100 | 24546 | C4-1/8-TO-475R-F |
| A33R17 | 0757-0415 | 6 | | RESISTOR 475 1% .125 W F TC=0+-100 | 24546 | C4-1/8-TO-475R-F |
| A33R18 | 0757-0415 | 6 | | RESISTOR 475 1% .125 W F TC=0+-100 | 24546 | C4-1/8-TO-475R-F |
| A33R19 | 0757-0415 | 6 | | RESISTOR 475 1% .125 W F TC=0+-100 | 24546 | C4-1/8-TO-475R-F |
| A33R20 | 0757-0415 | 6 | | RESISTOR 475 1% .125 W F TC=0+-100 | 24546 | C4-1/8-TO-475R-F |
| A33R21 | 0757-0442 | 9 | | RESISTOR 10K 1% .125 W F TC=0+-100 | 24546 | C4-1/8-TO-1002-F |
| A33R22 | 0757-0442 | 9 | | RESISTOR 10K 1% .125 W F TC=0+-100 | 24546 | C4-1/8-TO-1002-F |
| A33R24 | 2100-3889 | 5 | 1 | RESISTOR-VAR DUAL 10K-5%-WW/CP | 28480 | 2100-3889 |
| A33U1 | 1820-1963 | 7 | 2 | IC FF CMOS D-TYPE POS-EDGE-TRIG DUAL | 01928 | CB4013BAE |
| A33U2 | 1820-2310 | 0 | 1 | IC CNTR PMOS DECD UP/DOWN SYNCHRO | 50088 | MK50399N |
| A33U3 | 1820-1413 | 2 | 1 | IC DCDR CMOS BCD-TO-7-SEG 4-TO-7-LINE | 04713 | MC14511BCP |
| A33U4 | 1858-0047 | 5 | 1 | TRANSISTOR ARRAY 16-PIN PLSTC DIP | 13606 | ULN-2003A |
| A33U5 | 1820-0938 | 4 | 1 | IC FF CMOS J-K M/S POS-EDGE-TRIG DUAL | 0192B | CD4027AE |
| A33U6 | 1820-0935 | 1 | 1 | IC CNTR CMOS BIN NET-EDGE-TRIG 14-BIT | 0192B | CD4020AE |
| A33U7 | 1820-1963 | 7 | | IC FF CMOS D-TYPE POS-EDGE-TRIG DUAL | 0192B | CD4013BAE |
| A33U8 | 1826-0026 | 3 | 1 | IC COMPARATOR PRCN TO-99 | 01295 | LM311L |
| A33U9 | 1820-1408 | 5 | 1 | IC GATE CMOS AND TPL 3-INP | 0192B | CD40738F |
| A33W1 | 03580-61611 | 0 | 1 | CABLE ASSEMBLY | 28480 | 03580-61611 |
| | 03580-80001 | 2 | 1 | KIT-OPTION 001 | 28480 | 03580-80001 |
| | 03580-80000 | 1 | 1 | KIT-CONFIGURATION 1 AND 2 | 28480 | 03580-80000 |
| | 03580-80002 | 3 | 1 | KIT-CONFIGURATION 3 AND 4 | 28480 | 03580-80002 |
| | 03580-90002 | 4 | 1 | OPERATING AND SERVICE MANUAL | 28480 | 03580-90002 |

Δ1 SEE BACKDATING.

See introduction to this section for ordering information
*Indicates factory selected value

Replaceable Parts

## Table 6-3. Replaceable Parts (Cont'd).

| Reference Designation | HP Part Number | C D | Qty | Description | Mfr Code | Mfr Part Number |
|---|---|---|---|---|---|---|
| | | | | CHASSIS MOUNTED COMPONENTS | | |
| | 03580-04108 | | 2 | PLASTIC BATTERY END GUARD | 28480 | 03580-04108 |
| | 03581-80001 | | | KIT OPTION 001 | 28480 | 03581-80001 |
| BT1 THRU BT4 | 1420-0203 | | 4 | BATTERY PACK (4 CELLS) (OPT 001 ONLY) | 05397 | Y-6114 |
| BT5 | 1420-0202 | | 1 | BATTERY PACK (4 CELLS CENTER TAP) (OPT 001 ONLY) | 05397 | Y-5505 |
| | 10101B | | 1 | COVER:PROTECTIVE FRONT (OPT 001 ONLY) | 28480 | 10101B |
| | 0624-0410 | | 4 | SCR: TPG 6-19 (OPT 001 ONLY) | 28480 | 0624-0410 |
| C1 | 0160-2050 | | 1 | C: FXD 10 UF 30 V 10% | 56289 | 127P1069R3S4 |
| DS1 | 2140-0380 | | 1 | LAMP: INCAND (POWER) | 17537 | 86 |
| | 1450-0153 | | 1 | LAMP HOLDER (FOR DS1) | 08717 | 102SR |
| | 1450-0157 | | 1 | LENS (FOR DS1) | 08717 | 102XX-W |
| DS2 THRU DS4 | 1990-0450 | | 3 | DIODE: LIGHT EMITTING | 28480 | 1990-0450 |
| | 5040-7626 | | 3 | CLAMP LED (FOR DS2-4) | 28480 | 5040-7626 |
| F1 | 2110-0012 | | 1 | FUSE: 0.5 A 250 V NB | 75915 | 312.500 |
| J1 | 1510-0084 | | 1 | BINDING POST: J-GRAY/RED | 28480 | 1510-0084 |
| J2 | 1510-0087 | | 1 | BINDING POST: J-GRAY/BLK | 28480 | 1510-0087 |
| J3, J4 | 1510-0076 | | 2 | BINDING POST: J-GRAY | 28480 | 1510-0076 |
| J5 THRU J10 | 1250-0083 | | 6 | CONN: BNC | 02660 | 31-221-1020 |
| J11, J12 | 1510-0076 | | 2 | BINDING POST: J-GRAY (OPT 002 ONLY) | 28480 | 1510-0076 |
| | 2190-0027 | | | WASHER-INTERNAL LOCK | 78189 | 1914-00 |
| | 2950-0006 | | | NUT-HEX | 73734 | 9000 |
| K1 | 0490-0499 | | 1 | RELAY:SPDT 2A 12 VDC PEN LIST | 12300 | RS5D-12VDC |
| L1 | 01200-44703 | | 1 | COIL: TRACE ALIGN | 28480 | 01200-44703 |
| R1 | 2100-0573 | | 1 | R: VAR LINEAR 200K OHM (INTENSITY) 20% 1/2W | 01121 | WA4N040S204MZ |
| R2 | 2100-0572 | | 1 | R: VAR C COMP 100K OHM (ADAPTIVE SWEEP-INCLUDES S1) | 12697 | 381 |
| R3 | 2100-0571 | | 1 | R: VAR 5M OHM (FOCUS) 20% | 12697 | 381 |
| R4 | 2100-1714 | | 1 | R: VAR C COMP LINEAR 1K OHM 20% 1/2W (CAL 10 KHZ) | 01121 | TYPE W |
| R5 | 2100-2843 | | 1 | R: VAR COMP LINEAR 5K OHM 10% 1/2W (LEVEL) | 28480 | 2100-2843 |
| R6 | 2100-0564 | | 1 | R: VAR, 100 K 20 | 28480 | 2100-0564 |
| R7 | 2100-0574 | | 1 | R: VAR 10 TURN 5 K - 10% | 28480 | 2100-0574 |
| S1 | 2100-0572 | | | SWITCH: SPST (P/O R2) | 12697 | 381 |
| S2 | 03580-01901 | | 1 | SWTICH: PUSHBUTTON (DISPLAY) | 28480 | 03580-01901 |
| S3 | 3101-0548 | | 1 | SWITCH: PUSHBUTTON (AMPLITUDE MODE) | 28480 | 3101-0548 |
| S4 | 3101-0199 | | 1 | SWITCH: SLIDE DPDT (DBV/DBM) 0.5A 125V | 79727 | G126-0012 |
| S5 | 3101-0199 | | 1 | SWTICH: SLIDE DPDT (EXT REF/NORMAL) | 79727 | G126-0012 |
| S6 | 3101-0575 | | 1 | SWITCH: SLIDE (BAL,BRIDGED,TERMINATED)(OPT 002 ONLY) | 79727 | G168S-0000 |
| S7 | 3101-0199 | | 1 | SWTICH: SLIDE | 28480 | 3101-0199 |
| T1 | 9100-3425 | | 1 | TRANSFORMER: POWER | 28480 | 9100-3425 |
| T2 | 9100-3883 | | 1 | TRANSFORMER: OUTPUT (BALANCED TRACKING OSC OUT) (OPT 002 ONLY) | 28480 | 9100-3883 |
| V1 | 5083-1871 | | 1 | TUBE: CATHODE RAY | 28480 | 5083-1871 |
| W1 | 8120-1348 | | 1 | CORD: POWER, DETACHABLE | 70903 | KHS-7041 |
| W2 | 03580-61606 | | 1 | CABLE ASSY: POWER | 28480 | 03580-61606 |
| W3 | 03580-61604 | | 1 | CABLE ASSY: DIGITAL STORAGE | 28480 | 03580-61604 |
| W4 | 03580-61603 | | 1 | CABLE ASSY: POT (INCLUDES FOCUS POT, R3) | 28480 | 03580-61603 |
| W5 | 03580-61601 | | 1 | CABLE ASSY: DBV/DBM SWITCH | 28480 | 03580-61601 |
| | 03580-61608 | | 1 | CABLE ASSY: CRT | 28480 | 03580-61608 |
| W6 | 03580-61602 | | 1 | CABLE ASSY: INPUT (OPT 002 ONLY) | 28480 | 03580-61602 |
| XA1 | 1200-0037 | | 1 | SOCKET: CRT | 72825 | 97097 |
| | | | | MISCELLANEOUS MECHANICAL PARTS | | |
| | 5020-0476 | | 1 | BEZEL: CRT (METAL) | 28480 | 5020-0476 |
| | 03580-04102 | | 1 | COVER: BOTTOM | 28480 | 03580-04102 |
| | 03580-00608 | | 1 | COVER: CARD NEST | 28480 | 03580-00608 |
| | 03580-04104 | | 2 | COVER: SIDE RAIL | 28480 | 03580-04104 |
| | 03580-04103 | | 1 | COVER: TOP | 28480 | 03580-04103 |
| | 01200-44701 | | 1 | CRT NECK-CLAMP | 28480 | 01200-44701 |
| | 1390-0084 | | | FASTENER-PANEL: RECEPTACLE, QUARTER TURN | 94222 | 82-47-101-15 |
| | 1390-0339 | | | FASTENER-PANEL: SCREW, QUARTER TURN | 28480 | 1390-0339 |
| | 1390-0088 | | | FASTENER-PANEL: RETAINER (FOR SCREW) | 28480 | 1390-0088 |
| | 03580-60121 | | 1 | DECK: MAIN | 28480 | 03580-60121 |
| | 5060-0548 | | 1 | FACE PLACE: CRT (BLUE) | 28480 | 5060-0548 |
| | | | | FOOT: REAR PANEL | | |
| | 5040-5862 | | 4 | BASE: FOOT | 28480 | 5040-5862 |
| | 5040-5861 | | 4 | CAP: END | 28480 | 5040-5861 |
| | 03580-20001 | | 1 | FRAME: FRONT | 28480 | 03580-20001 |
| | 03580-20012 | | 1 | FRAME: REAR | 28480 | 03580-20012 |
| | 1510-0038 | | 1 | BINDING POST-SINGLE | 28480 | 1510-0038 |
| | 7120-4609 | | 1 | WARNING LABEL | 28480 | 7120-4609 |
| | 03580-23702 | | 2 | FRAME SIDE RAIL | 28480 | 03580-23702 |
| | 1440-0103 | | 2 | HANDLE: STRAP | 28480 | 1440-0103 |
| | 5040-0508 | | 1 | LIGHT SHIELD: CRT (PLASTIC) | 28480 | 5040-0508 |

See introduction to this section for ordering information
*Indicates factory selected value

## Table 6-3. Replaceable Parts (Cont'd).

| Reference Designation | HP Part Number | C D | Qty | Description | Mfr Code | Mfr Part Number |
|---|---|---|---|---|---|---|
| | | | | MISCELLANEOUS MECHANICAL PARTS (CONT'D) | | |
| | 03580-04104 | | 2 | COVER: SIDE RAIL | 28480 | 03580-04104 |
| | 5040-7042 | | 4 | CAP: END (FOR HANDLE) | 28480 | 5040-7042 |
| | 03580-24706 | | 4 | RETAINER (FOR HANDLE) | 28480 | 03580-24706 |
| | 03580-26001 | | 4 | SCREW (FOR HANDLE) | 28480 | 03580-26001 |
| | 3050-0456 | | 4 | WASHER (FOR HANDLE) | 86928 | 5808-16-15 |
| | 5040-0508 | | 1 | LIGHT SHIELD: CRT (PLASTIC) | 28480 | 5040-0508 |
| | 03580-00209 | | 1 | PANEL: FREQUENCY CONTROL MODULE | 28480 | 03580-00203 |
| | | | | PANEL: FRONT | | |
| | 03580-00211 Δ | | 1 | STANDARD 3580A | 28480 | 03580-00201 |
| | 03580-00214 Δ | | 1 | OPTION 002 | 28480 | 03580-00204 |
| | | | | PANEL: REAR | | |
| | 03580-00212 | | 1 | STANDARD 3580A | 28480 | 03580-00212 |
| | 03580-00205 | | 1 | OPTION 002 | 28480 | 03580-00205 |
| | 1460-1341 | | 1 | STAND: TILT | 28480 | 1460-1341 |
| | 03581-03301 | | 1 | BEZEL: LED | 28480 | 03580-09301 |
| | | | | KNOBS | | |
| | 0370-10005 | | | ADAPTIVE SWEEP | 28480 | 0370-1005 |
| | 0370-2182 | | | AMPLITUDE REF LEVEL | 28480 | 0370-2181 |
| | 0370-2186 | | | BANDWIDTH | 28480 | 0370-2186 |
| | 0370-2188 | | | DISPLAY SMOOTHING | 28480 | 0370-2188 |
| | 0370-1005 | | | FOCUS | 28480 | 0370-1005 |
| | 0370-3034 | | 1 | COARSE FREQUENCY | 28480 | 0370-3034 |
| | 0370-2185 | | | FREQUENCY SPAN | 28480 | 0370-2185 |
| | 03580-67401 | | | INPUT SENSITIVITY | 28480 | 03580-67401 |
| | 7120-4008 | | | DECAL | 28480 | 7120-3115 |
| | 0370-1005 | | | INTENSITY | 28480 | 0370-1005 |
| | 0370-2188 | | | MANUAL VERNIER | 28480 | 0370-2188 |
| | 0370-2994 | | | POWER | 28480 | 0370-2473 |
| | 0370-2187 | | | SWEEP MODE | 28480 | 0370-2187 |
| | 0370-2184 | | | SWEEP TIME | 28480 | 0370-2184 |
| | 0370-3036 | | 1 | CONCENTRIC KNOB (SMOOTHING) | 28480 | 0370-3036 |
| | 0370-2189 | | | VERNIER | 28480 | 0370-2189 |
| | 0370-0906 | | 6 | PUSHBUTTON-BASE | 28480 | 0370-0906 |
| | 0370-0934 | | 6 | PUSHBUTTON-CAP | 28480 | 0370-0934 |
| | 0370-0914 | | 6 | PUSHBUTTON-BEZEL | 28480 | 0370-0914 |
| | 0350-0137 | | 1 | LABEL: PUSHBUTTON, 1 DB | 28480 | 0350-0137 |
| | 0350-0136 | | 1 | LABEL: PUSHBUTTON, 10 DB | 28480 | 0350-0136 |
| | 0350-0135 | | 1 | LABLE: PUSHBUTTON, LIN | 28480 | 0350-0135 |
| | 0350-0138 | | 3 | LABEL: PUSHBUTTON, PLAIN | 28480 | 0350-0138 |
| | 03580-24305 | | 1 | PLATE-FRONT | 28480 | 03580-24305 |
| | 3101-0199 | | 1 | SWITCH-SLIDE | 79727 | G126-0012 |
| | 1450-0404 | | 1 | LENS CAP | 28480 | 1450-0404 |
| | 03580-00611 | | 1 | FOM SHIELD | 28480 | 03580-00611 |
| | 1990-0450 | | 1 | DIODE-LED | 28480 | 1990-0450 |
| R6 | 2100-0564 | | 1 | R: VAR, 100 K 20° | 28480 | 2100-0564 |
| R7 | 2100-3809 | | 1 | R: VAR 5 K | 28480 | 2100-3809 |
| S7 | 3101-0199 | | 1 | SWITCH SLIDE | 28480 | 3101-0199 |

ΔFOR S/N 1312A-00365 AND BELOW: ORDER 03580-00201 (STD) OR 03580-00204 (OPT. 002).

See introduction to this section for ordering information
*Indicates factory selected value

# SECTION VII
# TROUBLESHOOTING AND CIRCUIT DIAGRAMS

## 7-1. INTRODUCTION.

7-2. This section of the manual contains troubleshooting information and circuit diagrams for the Model 3580A Spectrum Analyzer. Included are troubleshooting information, information on factory selected components, functional block diagrams, schematic diagrams and component location diagrams.

## 7-3. TROUBLESHOOTING AND PREVENTIVE MAINTENANCE.

### 7-4. General Troubleshooting Procedures.

7-5. Troubleshooting information for the 3580A can be found in the functional block diagrams and circuit diagrams at the end of Section VII. An extensive set of notes, waveforms, and tables has been provided to help narrow the problems down from the functional block, to a board, and finally to a component.

7-6. Use the Overall Functional Block Diagram (Figure 7-1) to narrow the 3580A problem down into one of the four major functional blocks:

1) Input Section

2) Frequency and Sweep Section

3) IF Section

4) Display Section.

This diagram gives a good overall look at the 3580A operation. Once the diagram is understood, the failure symptoms alone may be adequate to lead you to the proper block. Other times, the output signals from the 3580A will suffice. For instance, the RECORDER X-AXIS and Y-AXIS outputs give an indication of proper instrument operation up to, but not including, the A7 Logic Board. The TRACKING OSC OUTPUT indicates if the Frequency and Sweep Section is working properly.

7-7. If the external control signals and front panel failure symptoms are not adequate to localize a problem to a particular block, remove the 3580A outer covers and check the appropriate input and output lines of each block. This will localize the problem to a block. The Analog Block Diagram (Figure 7-2), circuit schematics and associated notes can then be used to isolate the problem to the component.

### 7-8. A2 Board VTO Troubleshooting.

7-9. The A2 VTO is part of a complex feedback loop. If the VTO circuitry is not working properly, the feedback loop can be broken by applying approximately - 1.6 V dc to A2TP4. A 0 to + 9 V dc signal supplied to the VTO ERROR AMP on the RED jumper lead to the A2 board should then cause the oscillator frequency to vary from 1.0 to 1.5 MHz (0 to 50 kHz Input Frequency). This signal can then be followed around the feedback loop to find the faulty components. Use the waveforms supplied with the A2 board to aid in this process.

### 7-10. A3 Board Troubleshooting.

7-11. This part of Section VII contains test procedures for the digital control circuitry of the A3 Sweep Board (Schematic 4). If the previous troubleshooting procedures indicate problems with the normal or adaptive sweep circuitry, perform these test procedures.

a. Position the 3580A front panel controls to:

SWEEP MODE ..... REP

Short A3TP1 to the gray jumper wire connected near the center of the A3 board (Don't remove the gray jumper).

b. Adjust A3R54 (INTEGRATOR BALANCE) to verify that the output of the Ramp Integrator (A3TP1) can be adjusted from a positive to negative dc voltage. Readjust A3R54 for 0.000 volts ± .001 volts.

c. Measure Vsg on the dual FET, A3Q1. Both FET's should have Vsg $\leq$ 3 V dc.

d. Set switch S1 to the test position (UP position). Verify that CLOCK OUTPUT (A3U8 pin 11) is a TTL HIGH ($\geq$ 2.0 V dc). Return S1 to the normal position.

e. Remove the clock test jumper between Q18 and S1. Reposition:

SWEEP MODE ..... RESET

f. Connect a logic clip to A3U5. Turn the 3580A POWER switch OFF then back to ON. The instrument should come up in state $\overset{CBA}{000}$ or 100, where the C, B, and A state outputs are located on pins 13, 14 and 15 respectively of A3U5. If the instrument comes up in state 000, clock it to state 100 by momentarily switching A3S1 into, and then out of the test position. (This process will be called "clocking S1" from now on.)

g. Reposition the following front panel controls:

ADAPTIVE SWEEP . . . . . OFF
RESOLUTION BANDWIDTH . . . . . 100 Hz
FREQ. SPAN/DIV . . . . . 2 KHz
SWEEP TIME/DIV . . . . . .1 SEC/DIV

h. Check the following:

1. Collector of A3Q4: 10 volts ± .1 volts
2. Collector of A3Q16: 0.0 volts ± .1 volts
3. A3U5 pin 5: TTL LOW (as measured by logic clip).
4. A3U5 pins 2, 3, 4, 6 and 9: TTL HIGH (as measured by logic clip).
5. A3TP2: - .25 volts ± .02 volts.
6. A3TP3: + .175 volts ± .02 volts.
7. A3U8 pin 6: TTL HIGH (> 2.0 volts).

i. Manually "clock" S1 once and verify that the state does not change from 100.

j. Short A3TP3 to A3TP4. Verify that the voltage at A3TP11 can be changed from a negative to positive voltage by rotating A3R14. Readjust A3R14 so the voltage at TP11 is at the 0 V transition point. (In some cases it will alternate between positive and negative.)

k. Check for proper source voltage on A3Q14. (-1 < Vs < +4).

l. Readjust A3R14* fully CCW. Reposition:

ADAPTIVE SWEEP . . . . . CW

m. (L)RESP (A3U7 pin 5) should be a TTL HIGH. Verify that any one of the following will cause (L)RESP to go LOW.

ADAPTIVE SWEEP . . . . . CCW
SWEEP TIME/DIV . . . . . .05 SEC/DIV or faster

If (L)RESP doesn't function properly, check the A8 board.

n. In the following tests, the proper next state qualifiers are set up and the control logic is manually stepped to the next state by "clocking" S1 once. In each case the control logic should go to the next state only when all qualifiers are met and S1 is clocked.

o. If the control logic fails to clock to the proper state, reset the logic to state 000 or 001 by selecting:

SWEEP MODE . . . . . RESET

and momentarily turning the POWER switch OFF and then back to ON. Use Table 7-1 to reclock the control logic up to that state which will not go to the proper next state after clocking S1. Then recheck all the next state qualifiers, as given in Table 7-1 and test for proper inputs to the state flip–flops (U6 and U7). The J and K inputs to these flip–flops should correspond to the change the flip–flop will make on the next clock pulse. For instance, if a flip–flop's Q-output is to change from a 0 to a 1, its J input should be high. Likewise, if it is to change from a 1 to a 0, the K input should be high. If it is to stay at 1, the K input should be a 0. If it is to stay at 0, the J input should be a 0.

**Table 7-1. Conditions for Single Stepping A3 Logic.**

(Initial Setup: [Gray Jumper – TP1], [TP3 – TP4], A3R14* fully CCW, ADAPTIVE SWEEP - OFF, 100 Hz Bandwidth, 2 kHz/DIV, .1 SEC/DIV, RESET.)

| Present State | Next State | Conditions to go to next State | Next State Qualifiers |
|---|---|---|---|
| CBA<br>0 000 | CBA<br>1 100 | SWEEP MODE: RESET | (L)SING - HIGH<br>and<br>(H)GEW - HIGH<br>or<br>(L)RESET - LOW |
| 1 100 | 2 101 | SWEEP MODE: SING | (H)DLYO - HIGH<br>(L)RESET - HIGH |
| 2 101 | 3 111 | ADAP. SWEEP: CW | (L)RESP - HIGH |
| 3 111 | 4 110 | R14: CW* | CCMP - HIGH<br>(L)RESP - HIGH |
| 4 110 | 5 010 | ADAP. SWEEP: CCW | (L)RESET LOW |
| 5 010 | 6 011 | R14: CCW* | CCMP - LOW |
| 6 011 | 7 001 | (Clock after delay) | (H)DLYO - HIGH |
| 7 001 | 2 101 | R14: CW* | CCMP - HIGH |

*If A3R14 has a black casing, set it opposite to the setting given.

See Table 7-2. Notice also that the J and K inputs are not directly accessible on U7. All the inputs to each of the input AND gates must be high before there is a corresponding HIGH level given to one of the internal J or K inputs of the flip–flop.

**Table 7-2. Excitation Table for J – K Flip–Flop.**

| $Q_t$ (Before Clock) | $Q_t + 1$ (After Clock) | J | K |
|---|---|---|---|
| 0 | 1 | 1 | don't care |
| 1 | 0 | don't care | 1 |
| 1 | 1 | don't care | 0 |
| 0 | 0 | 0 | don't care |

p. Reposition (Only those controls printed in BOLD require a change from the previous tests.)

**ADAPTIVE SWEEP .....OFF**
RESOLUTION BANDWIDTH ..... 100 Hz
FREQ. SPAN/DIV ..... 2 KHz
**SWEEP TIME/DIV ..... 0.1 SEC**
**SWEEP MODE .....RESET**
A3R14 ..... fully CCW*

q. State 100

1. Clock S1, observe no change of state.
2. Check the voltage at A3TP5 and A3TP6, it should be 0 V dc ± .1 V.
3. Short the A3 gray jumper to A3TP1 and short A3TP3 to A3TP4 if not already done.
4. Reposition:

   SWEEP MODE ..... SING

5. Clock S1, and the logic should go to State 101.

r. State 101

1. Clock S1 and observe no change of state.
2. Check for the following levels:

   Collector A3Q4 : < - 8 V dc
   Collector A3Q16: 0 V dc ± .1 V
   A3TP5: < - 7 V dc
   A3TP6: 0 V dc ± .1 V
   A3TP8: TTL LOW ( < .8 Vdc)

3. Reposition:

   ADAPTIVE SWEEP .....CW

4. Clock S1 once, and the logic should go to State 111.

s. State 111

1. Adjust A3R14 fully CCW*.
2. Clock S1 and observe no change of state.
3. Check for the following levels:

   Collector A3Q16: -9.9 V ± .1 V
   A3TP5: < - 7 V
   A3TP8: TTL LOW ( < .8 V)

4. Reposition:

   ADAPTIVE SWEEP .....CCW

   Clock S1 and observe no change of state.

5. Adjust A3R14 fully CCW.
   Clock S1 and observe no change of state.
6. Reposition:

   ADAPTIVE SWEEP .....CW*

   Adjust A3R14 fully CCW*.
   Clock S1 and observe no change of state.

7. Adjust A3R14 fully CW*. Clock S1, and the logic should go to state 110.

t. State 110

1. Clock S1 and observe no change of state.
2. Remove the test lead between A3TP3 and A3TP4. The voltage at A3TP3 should be - .25 V ± .1 V.
   Replace the jumper.
3. Check the following levels:

   A3TP6: < - 6 V
   A3TP5: 0 V dc ± .1 V
   Collector of A3Q16: 0 V ± .1 V.

4. Adjust R14 fully CCW*.
   Clock S1 and observe no change of state.
5. Reposition:

   ADAPTIVE SWEEP .....CCW

   Adjust R14 fully CW*.

6. Clock S1, and the logic should go to state 010.

u. State 010

1. Clock S1 and observe no change of state.
2. Check for the following levels:

*If A3R14 has a black casing, set it opposite to the setting given.

A3TP6: > +6 V
A3TP5: 0 V ± .1 V
A3TP8: +9.5 V ± .5 V
Collector A3Q16: -9.9 V ± .1 V

3. Reposition:

RESOLUTION BANDWIDTH ..... 1 Hz

4. Connect an oscilloscope to the collector of A3Q11. Wait 5 seconds. The voltage should be a TTL HIGH ( ≥ 2 V dc).

5. Adjust A3R14 fully CCW*.

6. While watching the oscilloscope clock S1. The oscilloscope should indicate a TTL LOW (< .8 V) for a few seconds and then return HIGH. The logic state should be 011.

v. State 011

1. Check the following levels:

A3TP5: 0 V dc ± .1 V
A3TP6: 0 V dc ± .1 V
Collector of A3Q16: -9.9 V ± .1 V
A3TP8: TTL LOW ( < .8 V)

2. Reposition:

RESOLUTION BANDWIDTH ... 100 Hz

3. Clock S1 and the control logic should go to state 001.

w. State 001

1. Clock S1 and observe no change of state.

2. Check the following levels:

Collector A3Q16: -9.9 V ± .1 V
A3TP5: <-7 V
A3TP8: TTL LOW ( < .8 V)

3. Adjust A3R14 fully CW*. Clock S1, and the control logic should go to State 101.

x. Adjust R14 so that the voltage at A3TP11 is at the transition between a plus and minus voltage.

y. Remove all test leads and replace the clock jumper. The 3580A should sweep normally. The penlift relay should "click" in single sweep mode and the output of the A3 RAMP GENERATOR (A3TP1) should be +5 volts nominal for a front panel display indication at the right graticule. If the LOG SWEEP mode will not work, see the A3 schematic notes.

## 7-12. A7 Board.

7-13. The A7 Board (03580-66507) is available as a rebuilt exchange board (03580-69507) through your local -hp- Sales and Service Office. Many times, however, the board can be repaired without purchasing an exchange board. The following procedure will aid in determining whether the A7 board or the analog circuits preceeding the A7 board are at fault.

a. Connect the 3580A X-AXIS output on the rear panel to the X deflection EXT INPUT of an oscilloscope. A scope with variable persistance works best but is not absolutely necessary. Connect the 3580A Y-AXIS output to the vertical input of the scope. This procedure effectively half splits the 3580A for troubleshooting purposes.

1. If the signal seen of the scope is correct and the signal seen on the 3580A display is incorrect then the problem is in the A7, A8, or A13 boards. If the signal seen on the scope is incorrect DO NOT troubleshoot the A7 board until repairs are made to preceeding circuitry. (See Functional Block Diagram in the Operating and Service Manual.)

2. If the scope presentation is good but the 3580A display is incorrect, check A7TP1. If the presentation is bad there then troubleshoot the A7 board, otherwise troubleshoot A8 or A13.

7-14. Troubleshooting the A7 board.

a. Check A7Q2, Q4, Q6, Q8, and Q9. If these parts are P/N 1853-0098 replace all 5 of them with P/N 1853-0010. The new type is much more reliable and is being used in all instruments with serial numbers above 1415A01276.

b. Check A7TP4 and A7TP5. They should look similar to the figure shown below.

Horiz 2 μ sec/div
Vert .2 V/div (with 10:1 probe)

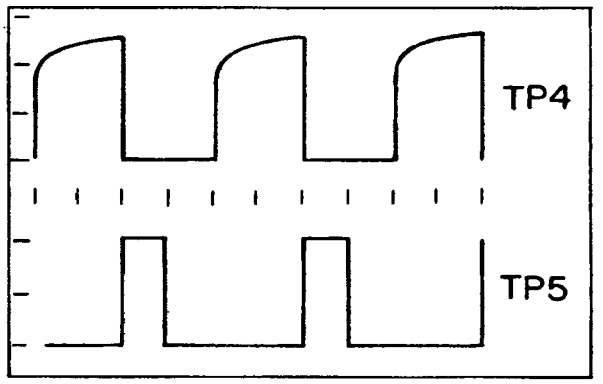


The frequency must be 55 K - 70 kHz! If the frequency is off check A8TP9. The clock frequency is determined by the A8 board.

*If A3R14 has a black casing, set it opposite to the setting given.

c. Clean the A7 board connector with alcohol and see if this eliminates the problem.

d. Flex the board slightly. Occasionally the mounting screws on the A7 board apply pressure in such a way as to intermittantly open traces.

e. If random glitches appear on the display try holding in the CLEAR WRITE button. If the glitches are still present probably a RAM is bad. Short pin 12 of each RAM to ground one at a time. When the glitches disappear replace that RAM.

f. Depress the STORE button, and then release STORE (depress again). If the display appears to shift one or more centimeters then replace A7U58.

g. If an unnatural phenomenon appears repedatively at the same location on the 3580A display (may appear intermittantly) try paralleling the black 99.25 K resistors with a 50 K resistor one at a time. When the 50 K resistor creates an anomaly at the same point, replace the paralleled 99.25 K resistor.

h. Verify that the CLOCK (A7 pin 8, waveform 2) is present. Also, verify that all the internal clocks are operating as indicated by the clock waveforms supplied with the A7 schematic. If these are working properly, check the Y-AXIS A to D and X-AXIS A to D and output D to A for proper operation.

7-15. The two A to D converters are basically counters which count up or down until their digital output is equal to the analog input. The digital output is fed back around to the input via a D to A converter. This feedback signal is then compared with the input signal to control the count of the A to D. By verifying that the feedback signal of the A to D converter is approximately equal to the input signal, the converters can be tested. This feedback signal is available at TP2 and TP3 of the X-AXIS A to D and Y-AXIS A to D respectively. Use MANUAL SWEEP mode when checking these converters.

7-16. The output D to A converter (U53, U61 to U63, and associated resistors) should also be checked for proper operation. It is basically a summing device which converts the digital output from the memory into currents proportional to their digital value. U53 sums these currents into an analog signal present at A7TP1. By using a small FREQ. SPAN/DIV (5 Hz) and a wide bandwidth (300 Hz), the memory can be loaded with a constant value so that the input to the D to A is a constant. Use A4TP4 to determine the input signal level to the memory of the A7 board, and test for proper output.

7-17. As a last test, verify that the U56 and U57 binary counters are receiving a clock pulse at pin 15, and that they are counting.

7-18. If these tests fail, it is probably best to exchange your board for a rebuilt exchange board (03580-69507). This board is available through your local -hp- Sales and Service Office. Exchange credit will be given if you return your original 03580-66507 or 03580-69507 board. Please remember the A7 board uses CMOS integrated circuits extensively and proper handling is important. DO NOT return A7 boards in a plastic bag.

## 7-19. High Voltage Power Supply.

7-20. The A11A1 and A11A2 High Voltage Power Supply boards operate in conjunction with the feedback control circuitry on the A8 board to produce the regulated high voltage for the CRT. One winding of the high voltage transformer (A11A2T1) is further used to produce the + 158 V dc supply for the Deflection Amplifiers. The + 158 V dc regulator is located on the A8 board.

7-21. The high voltage transformer is driven by the high voltage oscillator consisting of A8Q21 and associated circuitry. Oscillation is sustained by positive ac feedback from a tertiary winding on the transformer to the base of A8Q21. Note that the 55 kHz to 65 kHz signal from the collector of A8Q21 serves as the primary clock for the Sweep Generator (A3) and Digital Storage (A7) boards.

7-22. The high voltage output level is determined by the drive level of the high voltage oscillator. This is controlled by dc feedback from the CRT cathode supply. The feedback voltage is fed through divider resistors A11A2 R5 and R6 and applied to the A8 board (A8J1) through a flying red lead. To prevent damage to the high voltage supply, a safety interlock disables the high voltage oscillator when the feedback lead is unplugged from A8J1. On the A8 board, the feedback voltage is processed by control amplifiers Q23 and Q22 and applied to the base of A8Q21 through the tertiary feedback winding of the high voltage transformer.

7-23. The voltage at the cathode of the CRT (CRT pin 2) is normally about - 2,900 V and is not critical. Note, however, that the intensity grid voltage (CRT pin 3) cannot be more than 30 or 40 volts more negative than the cathode voltage. If it is, the display will be blanked.

**WARNING**

*Do* not *attempt to measure the difference between the cathode and intensity grid with a floating voltmeter. Measure the absolute voltage at each point with a high voltage probe and then calculate the difference. These voltages can cause serious injury or even death if proper care is not taken.*

7-24. The A11A1 and A11A2 boards have dangerous voltages which make troubleshooting both hazardous and difficult. Generally, the safest and most efficient approach is to remove all power from the 3580A and check these boards with an ohmmeter. Note that A11A1 CR1 and CR2

each contain many diodes in series and their forward resistance (as measured with -hp- Model 412A) can be as high as 50 megohms while their leakage (reverse) resistance will generally be about 100 megohms. The primary windings of the high voltage transformer and the CRT heater windings have a dc resistance of only a few ohms. The other two secondary windings have dc resistances of 100 to 200 ohms.

### 7-25. Crystal Replacement.

7-26. If it is found that the A5 filters or A2 crystal oscillator need a new crystal, the crystal cannot be exchanged individually but must be exchanged as a matched set of crystals and resistors. For this reason, the 03580-69505 exchange assembly, and 03580-69515 replacement assemblies are available. These assemblies consist of:

| Item | Qty | Description |
|---|---|---|
| 1 | 1 | A5 IF Filter Board, 03580-66505 (Exchange Ass'y, 03580-69505, contains a rebuilt A5 Board; Replacement Ass'y, 03580-69515 contains a new A5 Board). |
| 2 | 1 | 0410-0480 Crystal Set (This is a matched set of six crystals. Five of the crystals are already part of Item 1; the sixth cyrstal is for the A2 Tracking Oscillator). |
| 3 | 1 | A resistor matched to the sixth crystal supplied by Item 2. |

7-27. If you need a new crystal, order the exchange or replacement assembly through your local -hp- Sales and Service Office. Exchange credit can only be given if you return both your old 03580-66505 board and the appropriate crystal and matching resistor from the A2 board. Always use care when removing these crystals, as undue stress on the leads can damage the glass encapsulation.

NOTE

*This 03580-69505 exchange assembly is intended as an aid in crystal replacement. It is not intended to be used in place of repairing other components on the A5 board (03580-66505). The 03580-69515 replacement assembly is provided for those who want to purchase a new A5 Assembly and do not wish to use the exchange program.*

### 7-28. CRT Replacement.

**WARNING**

*Use care when handling the CRT. Undue stress can cause dangerous implosion of the tube. When shipping the CRT, follow the shipping instructions outlined in the Cathode Ray Tube Warranty information at the beginning of this manual.*

7-29. If it is determined that the CRT needs replacement, fill out the Cathode-Ray Tube Failure Report supplied at the beginning of this manual. To remove the CRT, use the following procedure:

a. Remove the front panel bezel (black hood).

b. Remove the metal support and plastic lens (under bezel).

c. Remove the rear protective CRT cover (on rear panel).

d. Remove the CRT rear tube socket.

e. Remove the bottom instrument cover.

f. Through a hole in the left side, at the rear of the instrument, unscrew the CRT neck clamp using a long shaft screwdriver.

g. Slide the CRT out. This may require moderate force. On instruments which have been used extensively, it may be necessary to cut the white CRT mounting tape to separate the CRT from the CRT tube shield. This tape is located on the top and bottom of the CRT, one inch to the rear of the CRT face.

Send the CRT and Failure Report to your local -hp- Sales and Service Office.

NOTES

*1. If the CRT Mounting Tape is cut, replace it with a new mounting tape -hp- Part No. 0460-1115.*

*2. When reinstalling the CRT, push the CRT slightly forward while tightening the CRT neck clamp. This secures the plastic lens in front of the CRT*

### 7-30. Battery Replacement (Option 001 only).

7-31. Each of the five battery sticks can be replaced individually. Do not attempt to replace individual cells within a battery stick. When ordering a new battery stick, order either the center tapped stick (-hp- Part No. 1420-0203) or the regular stick (-hp- Part No. 1420-0202).

**CAUTION**

*Do not remove the individual battery sticks until the entire battery pack has been removed from the instrument. The battery pack can be removed by disconnecting the battery plug (P1)*

*and removing the four screws holding the pack to the side of the instrument chassis. The individual battery sticks may short out against the sides of the instrument if the entire battery pack is not first removed.*

7-32. To determine which battery stick is faulty, place the 3580A on CHARGE for 14 hours and then run the 3580A on battery power until the undervoltage relays shut the battery power off. (Good batteries will run for 5 hours without a recharge). Measure the voltage across each battery stick. The nominal voltage should be approximately 5 volts per stick. Test for the stick which is lower in voltage than the other battery sticks. A bad stick will differ from the other battery sticks by .5 or more volts.

7-33. The normal warranty period on batteries is 90 days. Proper operation implys that the battery, operated under normal temperatures and load, will charge from a state of complete discharge in 14 hours, and will then power the instrument for 5 hours of continuous and normal use.

### 7-34. Cleaning and Lubricating Rotary Switches.

7-35. Faulty switches can cause intermittent performance, spurious responses, noise, and many other annoying problems. Tests have shown that the typical operating life of a switch is 25,000 operations or more. With proper cleaning and lubrication, this life may be extended to as much as 100,000 or more operations. Freon TF cleaner (-hp- Part No. 8500-0232) is available for cleaning switches. Electrotube 2G (-hp- Part No. 5060-6086) is available for lubricating high impedance switches. Electrotube 2A (-hp- Part No. 6040-0300) is available for lubricating low impedance switches. Follow the instructions given with these cleaners, -hp- Service Note M45B (available from your local -hp- Sales and Service Office) also gives detailed information on how to use these cleaners.

**7-36. Repairing Handles.** (For S/N 1415A00975 and below) Anytime a loose or broken handle is repaired the new type screw should be used. The illustration indicates the assembly order. The screw which attaches the L shaped plastic piece remains the same.

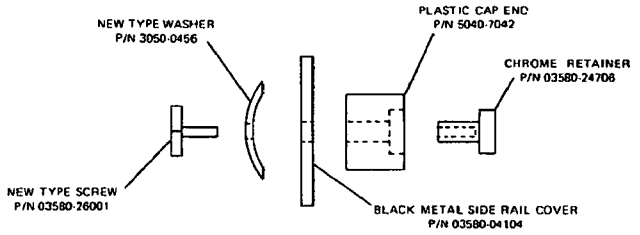


In order to repair both handles on one instrument the following new parts are needed.

| | |
|---|---|
| 4 ea screw | P/N 03580-26001 |
| 4 ea washer | P/N 3050-0456 |

### 7-37. FACTORY SELECTED COMPONENTS.

7-38. Certain components within the 3580A are individually selected at the factory to compensate for slightly varying circuit parameters. These components are identified by an asterisk (*) in the parts list and schematic diagrams.

**Table 7-3. Factory Selected Components.**

| Component | Function | Value Range |
|---|---|---|
| A3R88* | Controls Sweep Time/Div. Increasing A3R88* increases sweep time. Decreasing A3R88* decreases sweep time. | 11.8 kΩ ± 1% 1/8 W<br>13.7 kΩ ± 1% 1/8 W<br>15.4 kΩ ± 1% 1/8 W<br>17.4 kΩ ± 1% 1/8 W<br>19.6 kΩ ± 1% 1/8 W<br>21.5 kΩ ± 1% 1/8 W nominal<br>23.7 kΩ ± 1% 1/8 W<br>26.1 kΩ ± 1% 1/8 W<br>28.0 kΩ ± 1% 1/8 W<br>30.9 kΩ ± 1% 1/8 W<br>33.2 kΩ ± 1% 1/8 W |
| A5R1*<br>A5R26*<br>A5R48*<br>A5R71*<br>A5R73* | Assures equal gain within all crystal stages. Selected by value of the crystal resistance:<br>Crystal Resistance<br>< 91 Ω<br>91 Ω to 110 Ω<br>111 Ω to 130 Ω<br>131 Ω to 150 Ω<br>151 Ω to 170 Ω<br>171 Ω to 190 Ω<br>191 Ω to 210 Ω | <br><br><br><br><br>118 Ω (0698-4407)<br>100 Ω (0757-0401)<br>80.6 Ω (0698-4396)<br>60.4 Ω (0698-4387)<br>40.2 Ω (0698-3262)<br>20.0 Ω (0757-0384)<br>0 Ω (wire) |
| A6R41* | Adjusts +10 V power supply to 10 V ± .050 V. Increasing A6R41* increases the voltage. Decreasing A6R41* decreases the voltage. | 243 Ω to 1.96 kΩ 1/8 W typical: 1.05 kΩ |
| A7R109* | Adjusts positive pulse width at A7TP5 to 1.0 to 1.4 μsec (Rev. A) or 2.0 to 2.4 μsec (Rev. B). Increasing A7R109* increases pulse width. Decreasing A7R109* decreases pulse width. | 18.2 kΩ to 63.4 kΩ 1/8 W typical: 24.3 kΩ |
| A7R111* | Adjusts positive pulse at A7TP4 to 3.5 to 3.9 μsec. Increasing A7R111* increases the pulse width. Decreasing A7R111* decreases the pulse width. | 24.9 kΩ to 41.2 kΩ 1/8 W typical: 32.4 kΩ |
| A11A1R2* | Gives proper intensity limit adjustment. | 100 kΩ or 1 MΩ typical: 100 kΩ |
| A18R3* | Matches alphabetic code printed on transformer. | A 0 Ω<br>B 51.1 Ω ± 1% 1/8 W<br>C 100 Ω ± 1% 1/8 W<br>D 150 Ω ± 1% 1/8 W<br>E 182 Ω ± 1% 1/8 W<br>F 221 Ω ± 1% 1/8 W<br>G 267 Ω ± 1% 1/8 W<br>H 332 Ω ± 1% 1/8 W<br>I 392 Ω ± 1% 1/8 W<br>J 475 Ω ± 1% 1/8 W<br>K 562 Ω ± 1% 1/8 W |
| A34R46 | Adjusts range of "DIAL HI END SET" control. | 11 kΩ ± 1% 1/8 W<br>12.1 kΩ ± 1% 1/8 W<br>13.3 kΩ ± 1% 1/8 W<br>14.7 kΩ ± 1% 1/8 W<br>15.4 kΩ ± 1% 1/8 W |

A typical value is given for each. Table 7-3 is a list of the factory selected components, functions, and value ranges. A detailed description of selecting A3R88* is given in Paragraph 7-39. The other components will usually not require reselection. (The crystal padding resistors are factory selected and cannot be selected in the field. See Crystal Replacement, Paragraph 7-19).

7-39. A3R88* should be reselected if the frequency ramp integrating capacitor (C1) is changed (See Schematic 4). To

select A3R88*, select the following front panel control settings:

ADAPTIVE SWEEP ..... OFF
SWEEP TIME/DIV ..... 1 SEC
SWEEP MODE ..... REP

Measure the time interval between the negative and positive voltage transition at A3TP5 with an electronic counter. For the -hp- 5326A Counter, the controls should be:

| | |
|---|---|
| Sample Rate: | Fast |
| Function: | T.I. A to B |
| Multiplier: | .1 sec. |
| Channel A: | Slope - |
| | D.C. |
| | Atten X1 |
| | Level: set to trigger on negative edge of pulse. |
| Channel B: | Slope + |
| | D.C. |
| | Atten X1 |
| | Level: set to trigger on positive edge of pulse. |
| BNC Input: | Com |

The time interval should be 10.4 to 10.6 sec. The other sweep times can be easily tested at this time. The time interval should be 10.5 x SWEEP TIME/DIV (± 5%).

## 7-40. SCHEMATIC DIAGRAMS.

7-41. The schematic diagrams, Figure 7-3 through 7-12 show the detailed circuits of the Model 3580A. Each schematic is assigned a numerical callout (1 through 10) which is used for referencing. The schematics are arranged to provide as much signal continuity as possible and assemblies do not necessarily appear in the order of their reference designations. Refer to Table 7-4 for a complete cross reference listing. Refer to the General Schematic Notes for further information concerning the schematic diagrams.

**Table 7-4. Assembly Cross Reference.**

| Assembly Number | Assembly Title | Schematic Number |
|---|---|---|
| A2 (03581-66502) | VTO Tracking Oscillator | 6 |
| A3 (03580-66503) | Main and Log Sweep | 4 |
| A4 (03581-66504) | Detector | 3 |
| A5 (03580-66505) | IF Filter | 2 |
| A6 (03580-66506) | Low Voltage Power Supply | 9 |
| A7 (03580-66507) or (03580-69507) | Digital Storage | 7 |
| A8 (03580-66508) | Control Board | 8 |
| A9 (03580-66509) (Standard) (03580-66519) (Option 002) | Input Circuits | 1 |
| A10 (03580-66510 | Connector Board | 7 |
| A11A1 (03580-66531) | High Voltage | 8 |
| A11A2 (03580-66532) and (03580-66537) | HV Transformer | 8 |
| A13 (03580-66513) | Deflection Amp, | 8 |
| A14 (03580-66514) | Bandwidth/Sweep Time | 5 |
| A15 (03580-66515) | Freq Span/Sweep Mode | 5 |
| A16 (03580-66516) | Combining Board | 5 |
| A18 (03581-66518, Opt. 002 only) | Balanced Input | 1 |

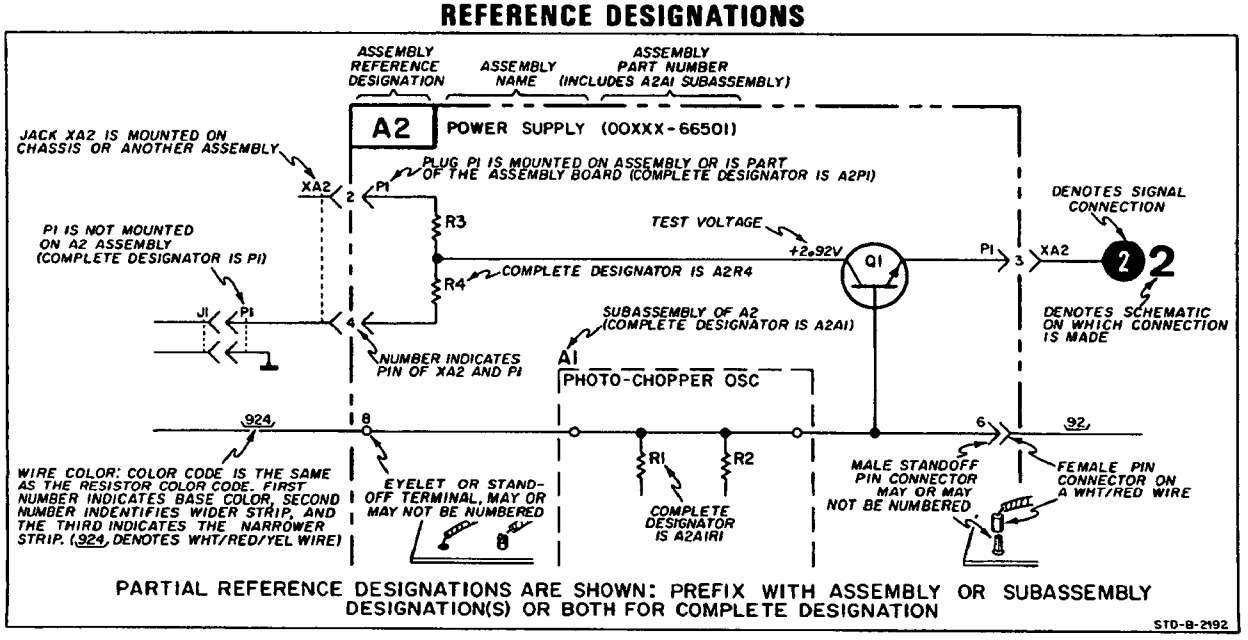

# GENERAL SCHEMATIC NOTES

1. PARTIAL REFERENCE DESIGNATIONS ARE SHOWN. PREFIX WITH ASSEMBLY OR SUBASSEMBLY DESIGNATION(S) OR BOTH FOR COMPLETE DESIGNATION.

2. COMPONENT VALUES ARE SHOWN AS FOLLOWS UNLESS OTHERWISE NOTED.
   RESISTANCE IN OHMS
   CAPACITANCE IN MICROFARADS
   INDUCTANCE IN MILLIHENRYS

3. DENOTES EARTH GROUND. USED FOR TERMINALS WITH NO LESS THAN A NO. 18 GAUGE WIRE CONNECTED BETWEEN TERMINAL AND EARTH GROUND TERMINAL OR AC POWER RECEPTACLE.

4. DENOTES FRAME GROUND. USED FOR TERMINALS WHICH ARE PERMANENTLY CONNECTED WITHIN APPROXIMATELY 0.1 OHM OF EARTH GROUND.

5. DENOTES GROUND ON PRINTED CIRCUIT ASSEMBLY. (PERMANENTLY CONNECTED TO FRAME GROUND).

6. DENOTES ASSEMBLY.

7. DENOTES MAIN SIGNAL PATH.

9. DENOTES FEEDBACK PATH.

10. DENOTES FRONT PANEL MARKING.

11. DENOTES REAR PANEL MARKING.

12. DENOTES SCREWDRIVER ADJUST.

13. * AVERAGE VALUE SHOWN, OPTIMUM VALUE SELECTED AT FACTORY. THE VALUE OF THESE COMPONENTS MAY VARY FROM ONE INSTRUMENT TO ANOTHER. THE METHOD OF SELECTING THESE COMPONENTS IS DESCRIBED IN SECTION V OF THIS MANUAL.

14. DENOTES SECOND APPEARANCE OF A CONNECTOR PIN.

15. \924/ DENOTES WIRE COLOR: COLOR CODE SAME AS RESISTOR COLOR CODE. FIRST NUMBER IDENTIFIES BASE COLOR, SECOND NUMBER IDENTIFIES WIDER STRIP, THIRD NUMBER IDENTIFIES NARROWER STRIP. (e.g. \924/ = WHITE, RED, YELLOW.)

17. ALL RELAYS ARE SHOWN DEENERGIZED.

18. WAVEFORMS AND AC VOLTAGE MEASUREMENTS WERE MADE WITH RESPECT TO CHASSIS GROUND USING AN OSCILLOSCOPE WITH A 10:1 DIVIDER PROBE (10 MEGOHM, 10 pF). THE VOLTAGE LEVELS SHOWN ON THE WAVEFORMS ARE ACTUAL VOLTAGE LEVELS AND ARE NOT TO BE CONFUSED WITH OSCILLOSCOPE SETTING. THE VOLTAGE LEVELS SHOWN ARE NOMINAL AND MAY VARY FROM ONE INSTRUMENT TO ANOTHER. A VARIATION OF ± 10 % IN MEASUREMENTS SHOULD BE ALLOWED.

19. DC VOLTAGE LEVELS WERE MEASURED WITH RESPECT TO CIRCUIT GROUND USING A VTVM WITH 10 MEGOHM INPUT IMPEDANCE. THE VOLTAGE LEVELS SHOWN ARE NOMINAL AND MAY VARY FROM ONE INSTRUMENT TO ANOTHER DUE TO CHANGE IN TRANSISTOR CHARACTERISTICS. A VARIATION OF ± 10 % SHOULD BE ALLOWED.

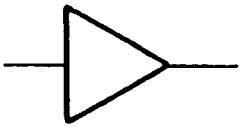

DENOTES BUFFER

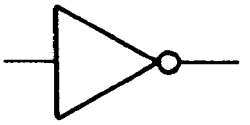

DENOTES INVERTER

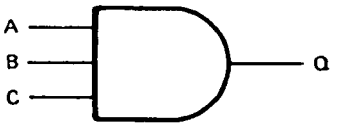


DENOTES AND GATE

| A | B | C | Q |
|---|---|---|---|
| 0 | 0 | 0 | 0 |
| 0 | 0 | 1 | 0 |
| 0 | 1 | 0 | 0 |
| 0 | 1 | 1 | 0 |
| 1 | 0 | 0 | 0 |
| 1 | 0 | 1 | 0 |
| 1 | 1 | 0 | 0 |
| 1 | 1 | 1 | 1 |

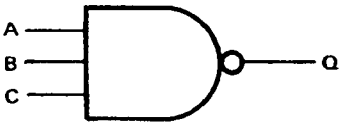


DENOTES NAND GATE

| A | B | C | Q |
|---|---|---|---|
| 0 | 0 | 0 | 1 |
| 0 | 0 | 1 | 1 |
| 0 | 1 | 0 | 1 |
| 0 | 1 | 1 | 1 |
| 1 | 0 | 0 | 1 |
| 1 | 0 | 1 | 1 |
| 1 | 1 | 0 | 1 |
| 1 | 1 | 1 | 0 |

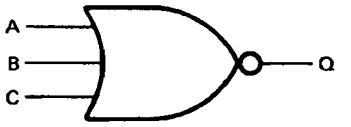


DENOTES NOR GATE

| A | B | C | Q |
|---|---|---|---|
| 0 | 0 | 0 | 1 |
| 0 | 0 | 1 | 0 |
| 0 | 1 | 0 | 0 |
| 0 | 1 | 1 | 0 |
| 1 | 0 | 0 | 0 |
| 1 | 0 | 1 | 0 |
| 1 | 1 | 0 | 0 |
| 1 | 1 | 1 | 0 |

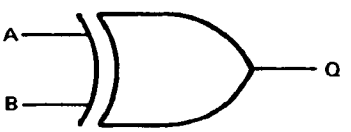


DENOTES EXCLUSIVE OR GATE

| A | B | Q |
|---|---|---|
| 0 | 0 | 0 |
| 0 | 1 | 1 |
| 1 | 0 | 1 |
| 1 | 1 | 0 |

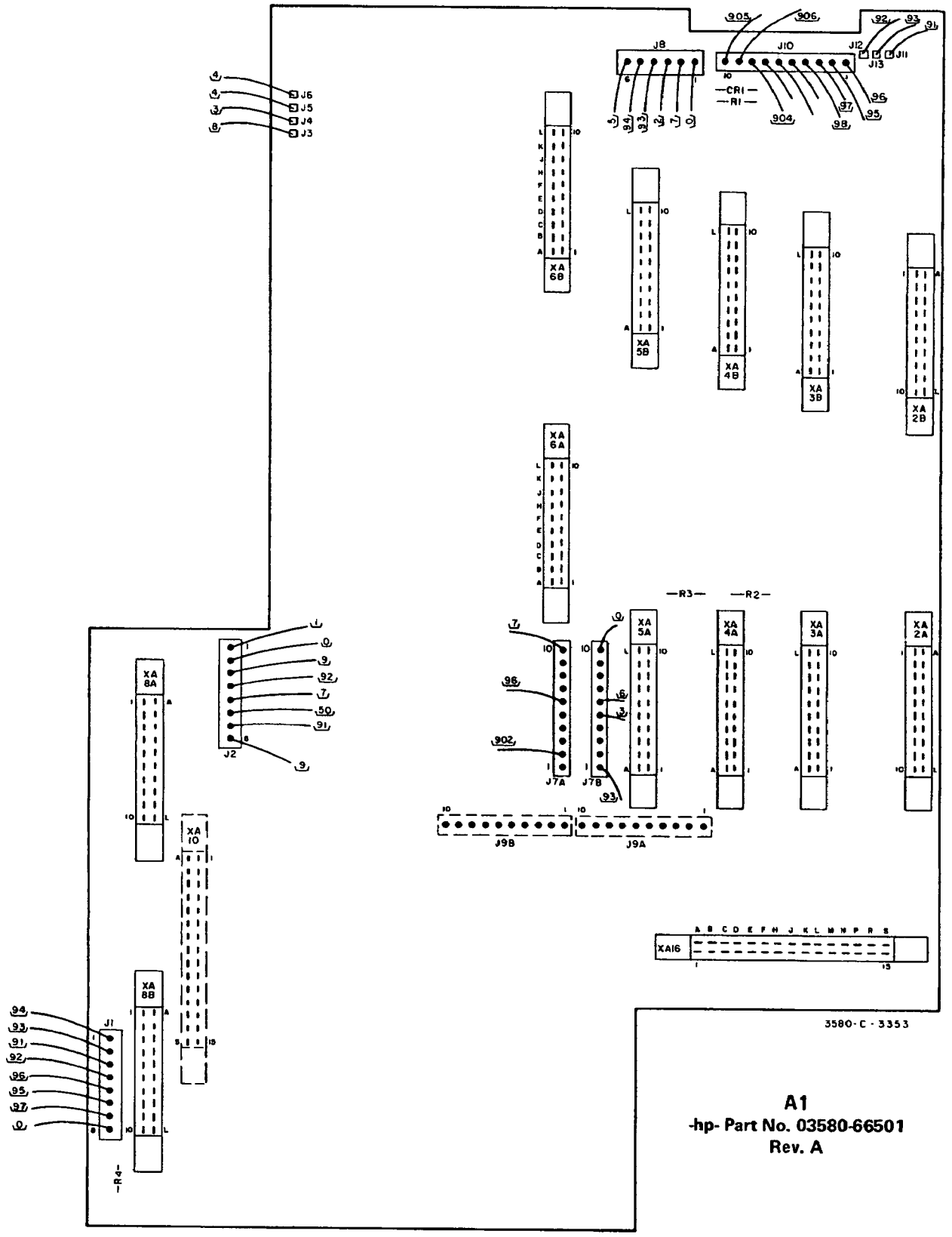


**Figure 7-1. Mother Board (A1) Component Location Diagram.**

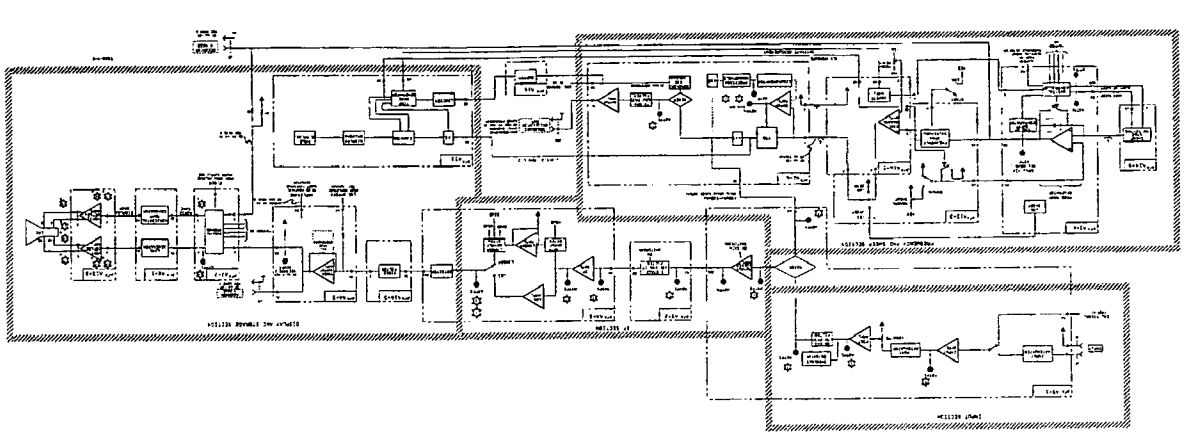

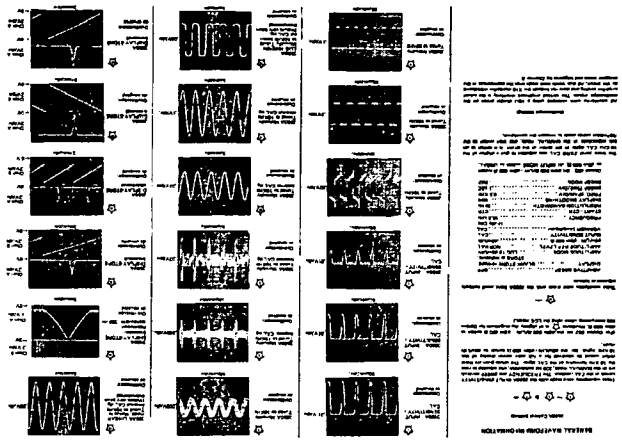

Table 1. Input Circuit Amplitude Levels and Gains for Full Scale Sine Wave Inputs. (Amplitude Ref Level – Nominal). Note: All voltages in RMS.

| Input Amplitude | Bandwidth | I.F. Input A4TP4, A4TP1 | I.F. Output A8 pin 20, A4TP1 |
|---|---|---|---|
| 300 Hz | 840 mV p-p | 420 mV p-p |
| 100 Hz | 840 mV p-p | 420 mV p-p |
| 30 Hz | 325 mV p-p | 160 mV p-p |
| 10 Hz | 205 mV p-p | 100 mV p-p |
| 3 Hz | 110 mV p-p | 60 mV p-p |
| 1 Hz | 110 mV p-p | 60 mV p-p |

Table 2. Approximate IF Level Changes with Bandwidth. (Full Scale Sine Wave Input, LOG Mode, Manually Tuned to Input Frequency)

| Full Scale Input | MAX INPUT (INPUT SENSITIVITY Sensitiv) | AMPLITUDE REF LEVEL | A4TP2 | Input Attenuation | Input Amp Gain | A4A6 pin 8 | Output Attenuation | A4 pin 7, A8 pin 3 (LOG MODE) | Output Amp Gain | A4TP2 (Input Value) |
|---|---|---|---|---|---|---|---|---|---|---|
| 1 V rms | 1 V | X1 | 6.7 V p-p | 40 dB | + 40 dB | 6.7 V p-p | - 40 dB | - 20 V dc | + 34 dB (ASM) | 3.4 V p-p |
| .2 V rms | 1 V | X.2 | 1.22 V p-p | 40 dB | + 40 dB | 1.22 V p-p | - 20 dB | + 4.3 V dc | + 36.2 dB (ASM) | 3.4 V p-p |
| .1 V rms | 1 V | X.1 | .67 V p-p | 40 dB | + 40 dB | .67 V p-p | - 20 dB | - 20 V dc | + 34 dB (ASM) | 3.4 V p-p |
| .03 V rms | 1 V | X.03 | .132 V p-p | 40 dB | + 40 dB | 132 V p-p | - 10 dB | + 4.3 V dc | + 36.2 dB (ASM) | 3.4 V p-p |
| .01 V rms | 1 V | X.01 | .067 V p-p | 0 dB | + 40 dB | 6.7 V p-p | - 40 dB | - 20 V dc | + 34 dB (ASM) | 3.4 V p-p |
| 1 mV p-p | 1 V | X.005 | | 0 dB | + 40 dB | 1.32 V p-p | - 20 dB | + 4.3 V dc | + 36.2 dB (ASM) | 3.4 V p-p |
| .1 mV p-p | 1 V | X.001 | | 0 dB | + 40 dB | .67 V p-p | - 20 dB | - 20 V dc | + 34 dB (ASM) | 3.4 V p-p |
| .2 mV p-p | 1 V | X.0005 | | 0 dB | + 40 dB | 132 V p-p | - 10 dB | + 4.3 V dc | + 36.2 dB (ASM) | 3.4 V p-p |

Table 3. Approximate Full Scale Levels in Linear Amplitude (LINEAR Mode, Full Scale Input, Manually Tuned to Input Frequency).

Table 4. Linear and Log Offsets.

| AMPLITUDE MODE | AMPLITUDE REF LEVEL | A4 pin 17 |
|---|---|---|
| LOG | 0 | - 2.00 V dc |
| LOG | -10 | - 2.20 V dc |
| LOG | -20 | - 2.00 V dc |
| LOG | -30 | - 1.70 V dc |
| LOG | -40 | - 1.00 V dc |
| LOG | -50 | - 1.20 V dc |
| LOG | -60 | - 1.00 V dc |
| LOG | -70 | - 0.70 V dc |
| LINEAR | Any Setting | - 2.00 V dc |

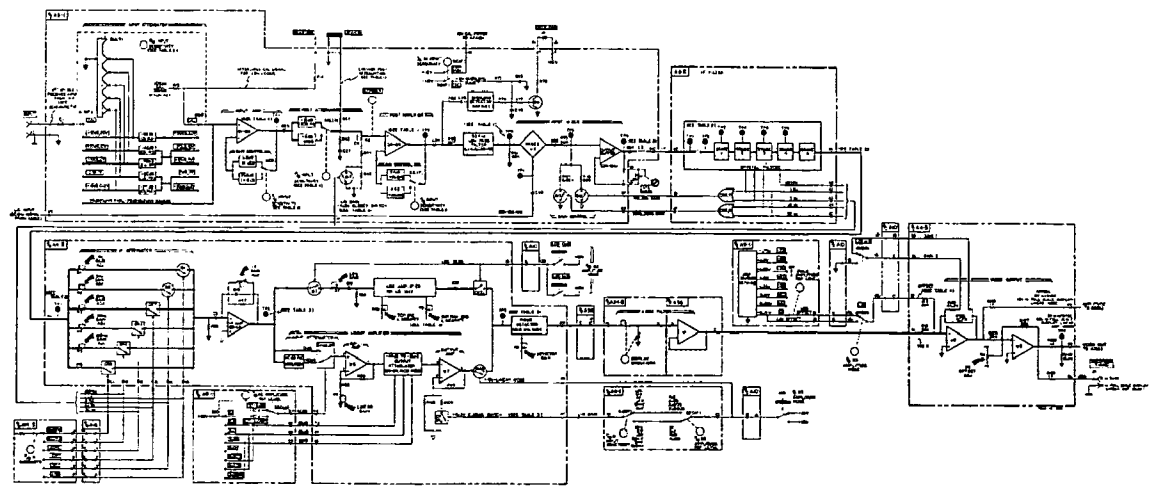

Figure 7-1. Amplitude Section Detailed Block Diagram.

2

3

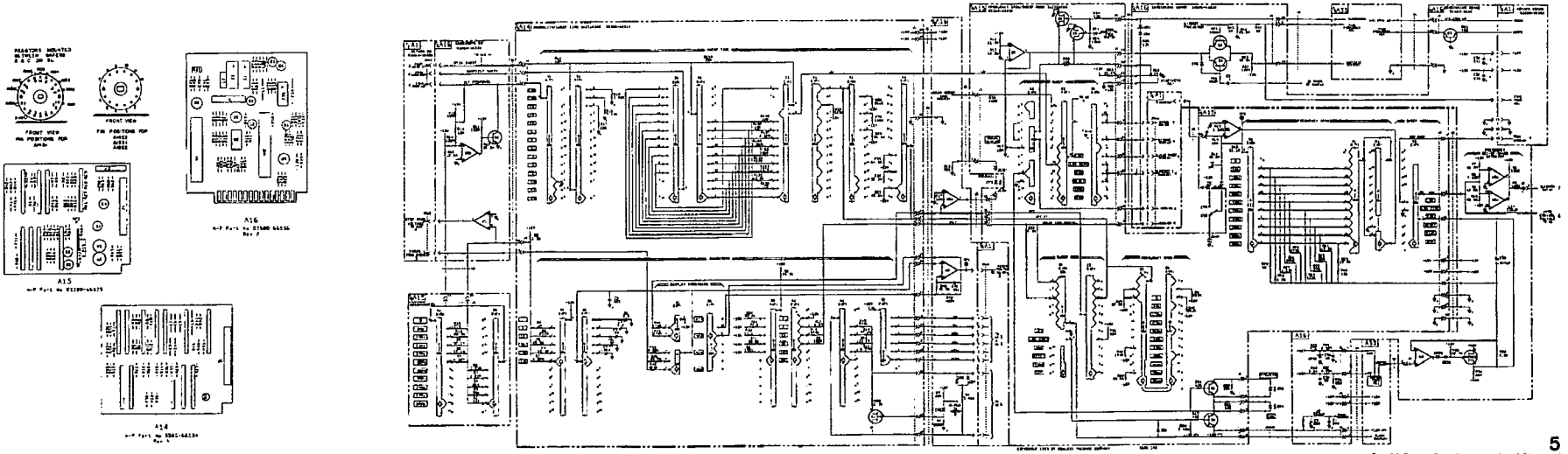

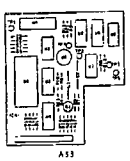

A53

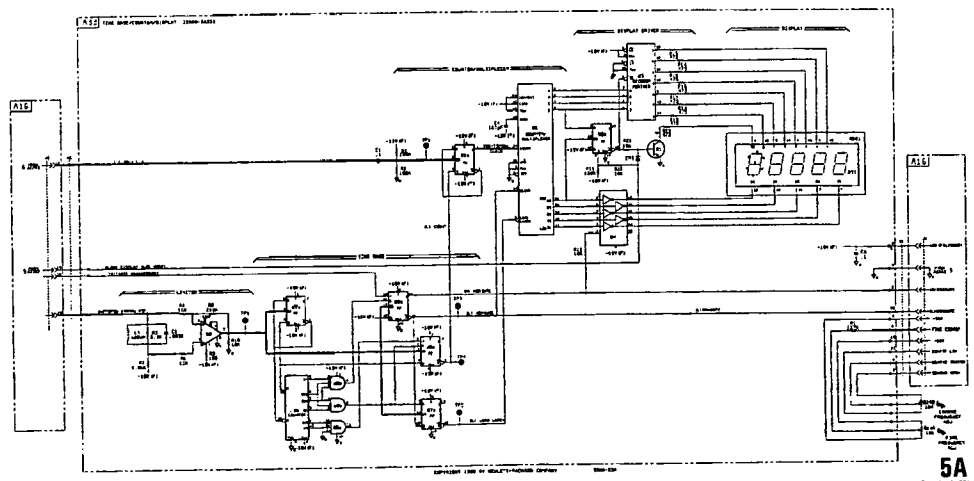

5A

Figure 7-4(a). Frequency Counter and Display Circuits (A33)
Schematic and Component Location Diagrams.

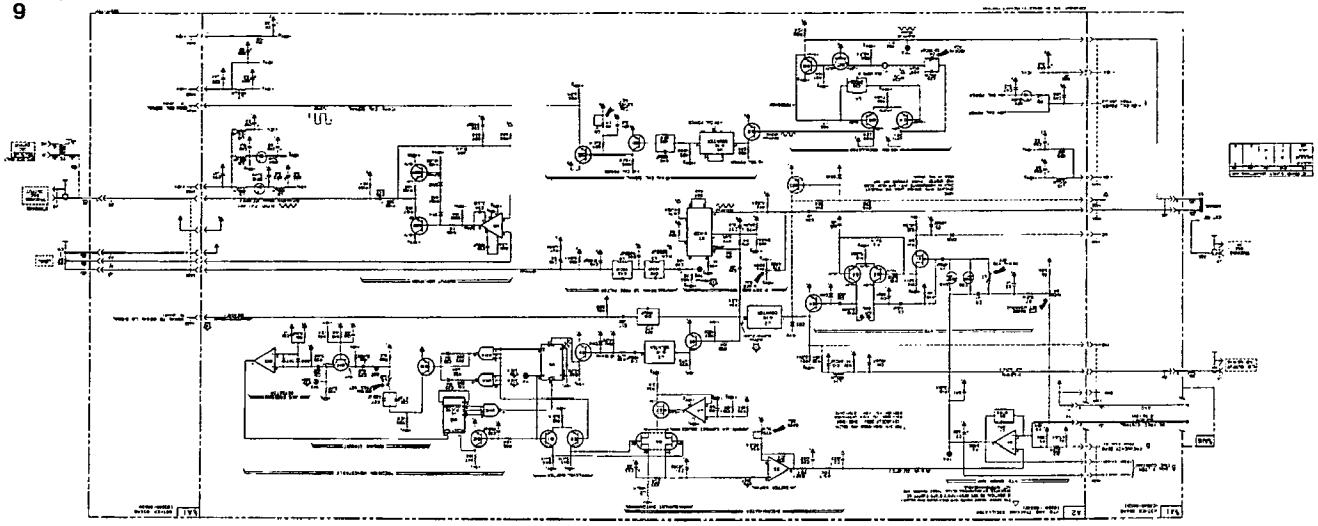

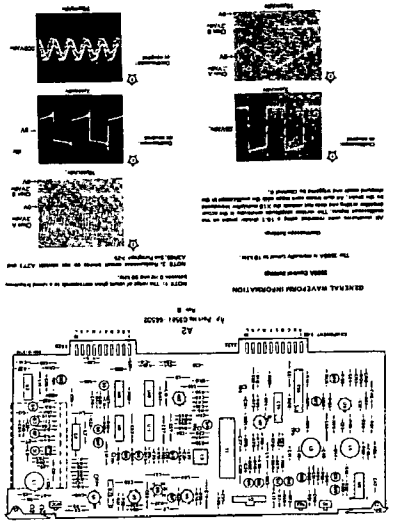

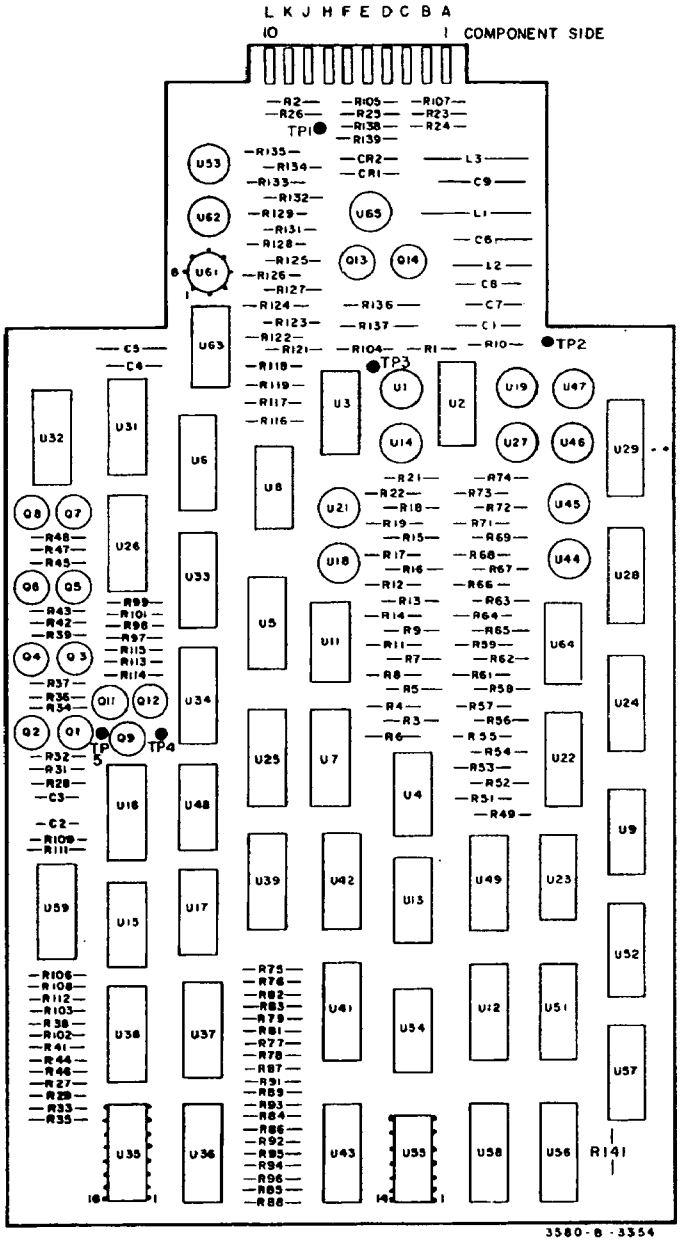


A7

*hp* Part No. 03580-66507

Rev. C

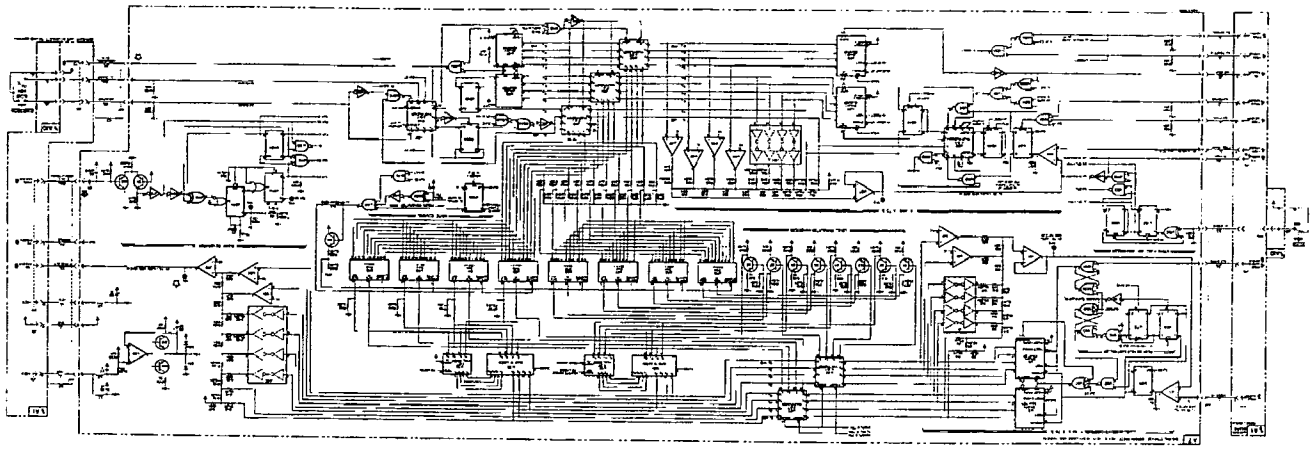

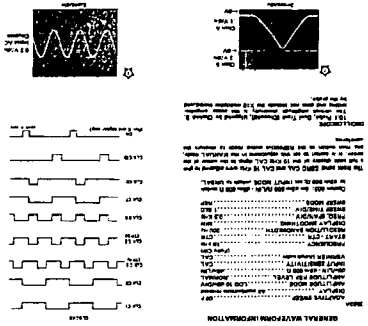

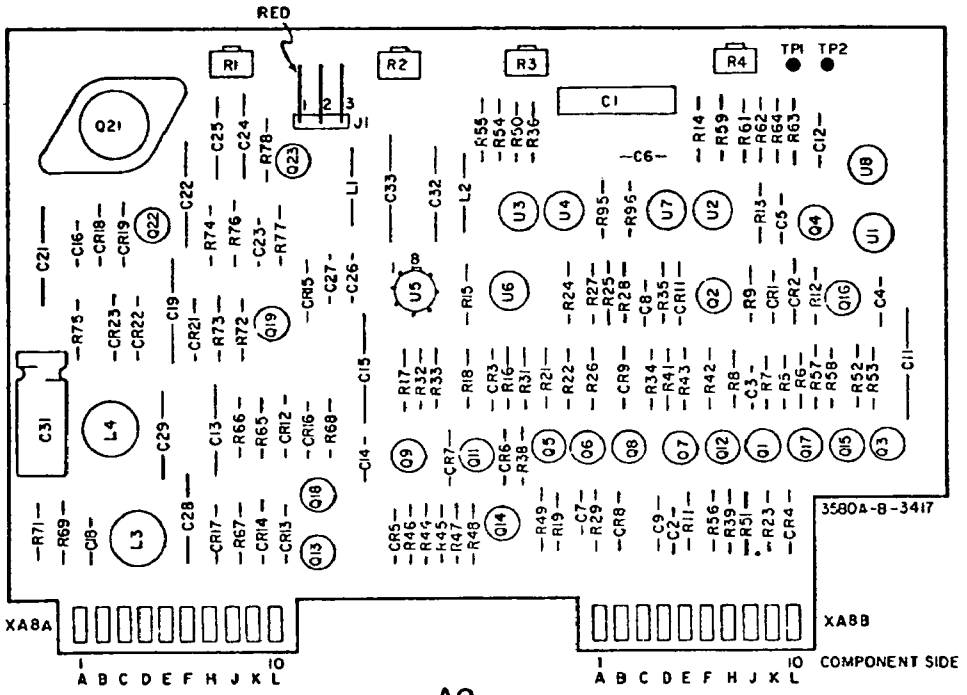


**A8**

*hp* Part No. 3580-66508

Rev B

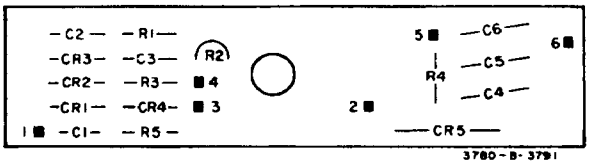


**A11A1**

**-hp- Part No. 03580-66531**

**Rev. A**

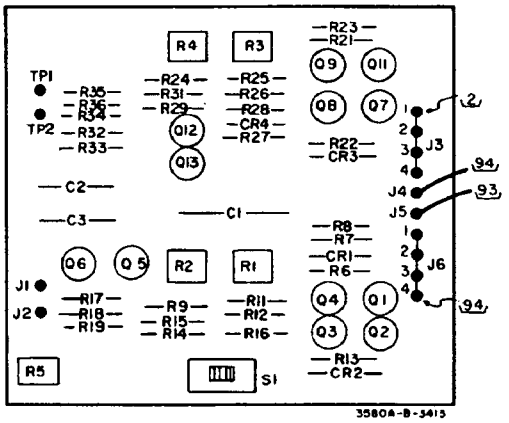


**A13**

**-hp- Part No. 03580-66513**

**Rev. A**

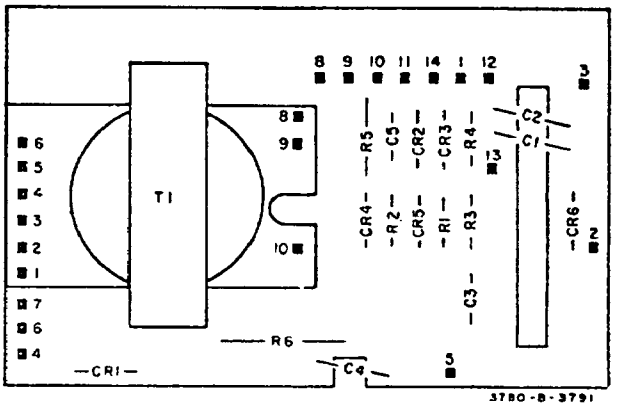


**A11A2**

**-hp- Part No. 03580-66532**

**Rev. A**

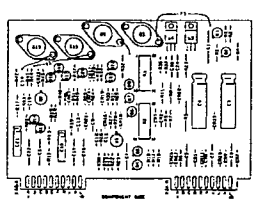

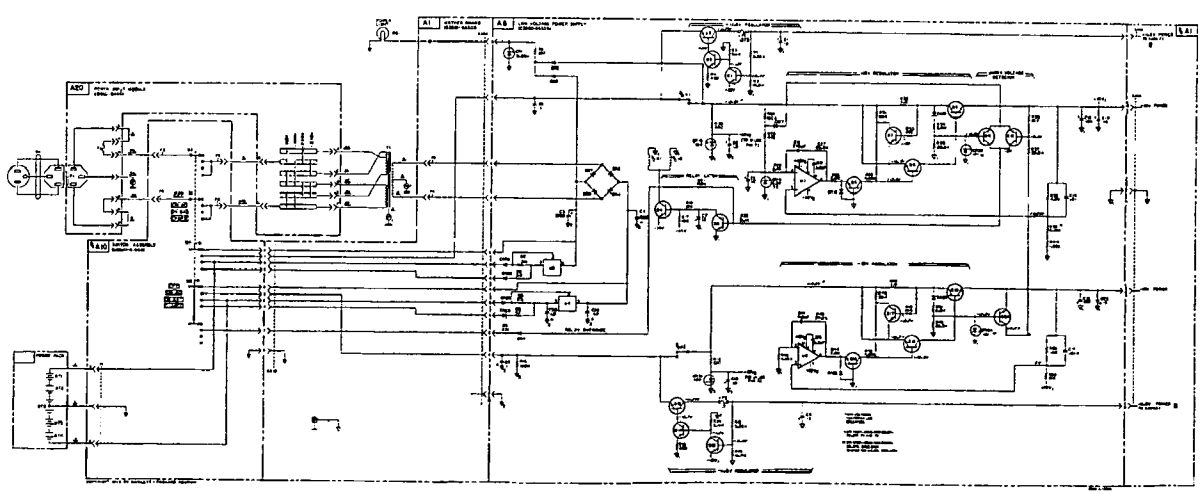

Figure 7-12. Low Voltage Power Supply (A8) Schematic and Component Location Diagram, and Power Input Module (A20) Schematic.

# SECTION VIII
# BACKDATING

## 8-1. INTRODUCTION.

8-2. This section contains backdating changes which make this manual applicable to earlier instruments. Where possible, backdating changes have been integrated into the manual text, parts list and schematic diagrams. Changes that are too long or otherwise impractical to integrate into the manual are covered in this section. Backdating changes included in this section are referenced by a numbered delta ($\Delta_1$) which appears in the text, parts list and schematic diagrams. The number indicates the number of the corresponding backdating change. Make all backdating changes that apply to your instrument.

**CHANGE NO. $\Delta_1$:** Applies to Option 002 instruments with serial number 1312A-00465 and below.

**Table 1-1:** Change Balanced Input Frequency Response specification to ± 0.5 dB, 300 Hz to 20 kHz.

**Paragraph 3-188:** Change CAUTION to read as follows:

**CAUTION**

*When using the balanced terminated input configuration, the differential input level must not exceed + 27 dBm or ± 15 V dc. Exceeding these input levels will damage the input circuitry.*

**Figure 3-25(C):** Change the Terminated input configuration as shown in Figure 8-1.

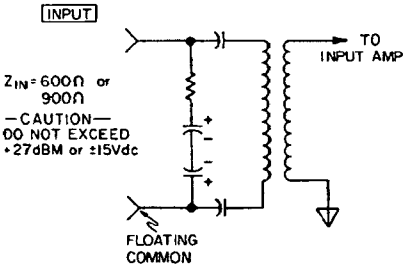


C. TERMINATED

**Figure 8-1. Balanced-Terminated Input Configuration.**

**Table 5-13 (pp. 5-15):** Delete 40 Hz from the Frequency Response Test.

**Table 6-1:** Change the Balanced Input Assembly (A18) parts list as follows:

| | | | | | |
|---|---|---|---|---|---|
| A18 | 03580-66518 | 1 | BOARD ASSY:INPUT,BALANCED (OPTION 002) | 28480 | 03580-66518 |
| A18C1 | 0170-0042 | | C:FXD MY 0.33UF 5% 100VDCW | 99515 | E1-334D TYPE E120 |
| A18C2 | 0180-0228 | | C:FXD ELECT 22 UF 10% 15VDCW | 56289 | 1500226X901582-DYS |
| A18C3 | 0180-0228 | | C:FXD ELECT 22 UF 10% 15VDCW | 56289 | 1500226X901582-DYS |
| A18C4 | 0170-0042 | | C:FXD MY 0.33UF 5% 100VDCW | 99515 | E1-334D TYPE E120 |
| A18C5 | 0160-2206 | | C:FXD MICA 160 PF 5% | 28480 | 0160-2206 |
| A18C6 | 0140-0204 | | C:FXD MICA 47 PF 5% | 14655 | RDM15E470J5C |
| A18J1 | 1251-2969 | | CONN:PHONO,SINGLE JACK | 27264 | 15-24-0501 |
| A18J2 | 1251-3638 | | CONN:POST | 28480 | 1251-3638 |
| A18R1 | 0757-0819 | 1 | R:FXD MET FLM 909 OHM 1% 1/2W | 28480 | 0757-0819 |
| A18R2 | 0698-4870 | 1 | R:FXD FLM 604 OHM 1.0% 1/2W | 28480 | 0698-4870 |
| A18R3 * | 0757-0284 | | R:FXD MET FLM 150 OHM 1% 1/8W | 28480 | 0757-0284 |
| A18R3 | | | FACTORY SELECTED PART | | |
| A18R4 | 0757-0472 | | R:FXD MET FLM 200K OHM 1% 1/8W | 28480 | 0757-0472 |
| A18R5 | 0698-3245 | | R:FXD MET FLM 20.5K OHM 1% 1/8W | 28480 | 0698-3245 |
| A18T1 | 9100-1460 | 1 | TRANSFORMER AUDIO | 28480 | 9100-1460 |

**Schematic No. 1:** Change the Balanced Input Assembly (A18) schematic and component locator as shown in Figure 8-2.

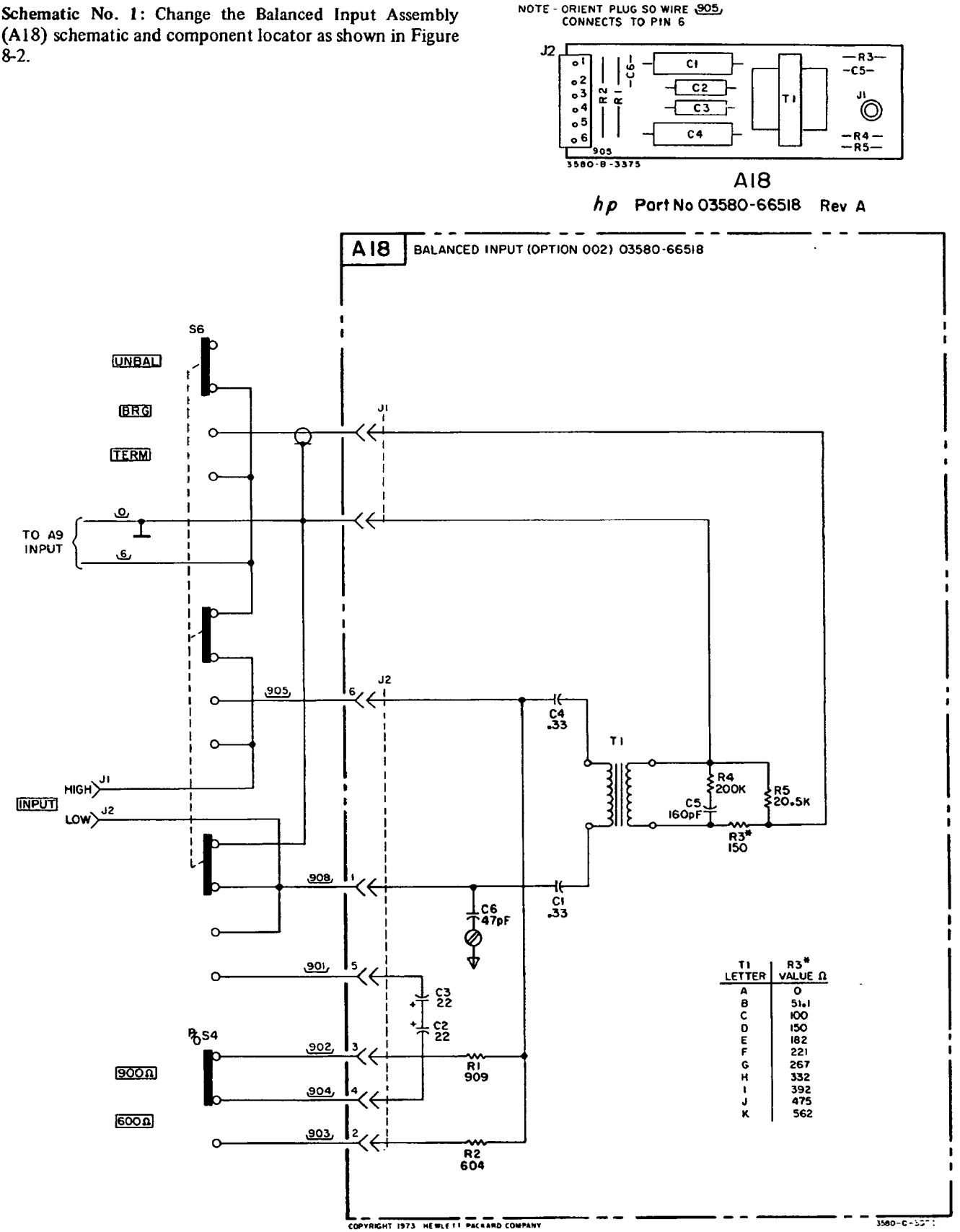


**Figure 8-2. Balanced Input Assembly.**

**CHANGE NO. $\Delta_2$:** Applies to instruments with the following serial numbers:

1312A-00399 and lower
1312A-00402
1312A-00403
1312A-00405
1312A-00408
1312A-00410
1312A-00413
1312A-00416 thru 1409A-00515

**Table 6-1:** Change the High Voltage Power Supply (A11) parts list as follows:

| | | | | | |
|---|---|---|---|---|---|
| A11 | 03580-64201 | 1 | POWER SUPPLY-HIGH VOLTAGE | 28480 | 03580-64201 |
| | 1251-3069 | 1 | CONNECTOR:PC B MALE CONTACT | 28480 | 1251-3069 |
| | 1251-3201 | 1 | CONNECTOR:POST TYPE 3-CONTACT POSITION | 27264 | 09-50-7031 |
| A11A1 | 03580-66511 | 1 | PC ASSY:POWER SUPPLY 1, HIGH VOLTAGE | 28480 | 03580-66511 |
| A11A1C1 | 0160-3007 | 5 | C:FXD CER 4700 PF 20% 4K VDCW | 72982 | 3888-024-Y5S0-472M |
| A11A1C2, C3 | 0160-3008 | 4 | C:FXD CER 4700 PF 20% 4K VDCW | 72982 | 3888-024-Y5S0-472M |
| A11A1C4 | 0160-3007 | | C:FXD CER 4700 PF 20% 4K VDCW | 72982 | 3888-024-Y5S0-472M |
| A11A1C5 | 0160-3008 | | C:FXD CER 4700 PF 20% 4K VDCW | 72982 | 3888-024-Y5S0-472M |
| A11A1CR1, CR2 | 1901-0341 | 2 | DIODE:SI 7000 PIV 50MA | 28480 | 1901-0341 |
| A11A1R1 | 2100-3359 | 1 | R:VAR CERMET 2 MEGOHM 20% TYPE VI 1/2W | 28480 | 2100-3359 |
| A11A1R2 * | 0687-1041 | 1 | R:FXD COMP 100K OHM 10% 1/2W FACTORY SELECTED PART | 01121 | EB 1041 |
| A11A2 | 03580-66512 | 1 | BOARD ASSY: POWER SUPPLY 2 - DOESN'T INCLUDE A11A2T1 | 28480 | 03580-66512 |
| A11A2C1 | 0160-3007 | | C:FXD CER 4700 PF 20% 4K VDCW | 72982 | 3888-024-Y5S0-472M |
| A11A2C2 | 0160-3008 | | C:FXD CER 4700 PF 20% 4K VDCW | 72982 | 3888-024-Y5S0-472M |
| A11A2C3 | 0160-3007 | | C:FXD CER 4700 PF 20% 4K VDCW | 72982 | 3888-024-Y5S0-472M |
| A11A2C4 | 0160-3007 | | C:FXD CER 4700 PF 20% 4K VDCW | 72982 | 3888-024-Y5S0-472M |
| A11A2C5 | 0160-3007 | | C:FXD CER 4700 PF 20% 4K VDCW | 72982 | 3888-024-Y5S0-472M |
| A11A2C6 | 0160-2544 | 1 | C:FXD CER 270 PF 10% 1000VDCW | 56289 | C0168102E271KS27-CDH |
| A11A2CR1 | 1902-3428 | 2 | DIODE BREAKDOWN:SILICON 100V 5% | 28480 | 1902-3428 |
| A11A2CR2 | 1902-3428 | | DIODE BREAKDOWN:SILICON 100V 5% | 28480 | 1902-3428 |
| A11A2CR3 | 1902-3237 | 1 | DIODE BREAKDOWN:SILICON 20.0V 5% | 28480 | 1902-3237 |
| A11A2R1 | 0836-0001 | 1 | R:FXD CARBON 50 MEGOHM 10% 2W | 28480 | 0836-0001 |
| A11A2R2 | 0687-1051 | 1 | R:FXD COMP 1 MEGOHM 10% 1/2W | 01121 | EB 1051 |
| A11A2R3 | 0687-1531 | 1 | R:FXD COMP 15K OHM 10% 1/2W | 01121 | EB 1531 |
| A11A2R4 | 0687-2221 | 1 | R:FXD COMP 2200 OHM 10% 1/2W | 01121 | EB 2221 |
| A11A2R5 | 0687-2751 | 1 | R:FXD COMP 2.7 MEGOHM 10% 1/2W | 01121 | EB 2751 |
| A11A2R6 | 0698-8427 | 1 | R:FXD MET FLM 29 MEGOHM 10% 1.0W | 28480 | 0698-8427 |
| A11A2T1 | 9100-3263 | 1 | TRANSFORMER:H.V. (INCLUDES 03580-66517) | 28480 | 9100-3263 |

**Schematic No. 8:** Use the High Voltage Power Supply schematic (Figure 8-6) in place of the existing schematic.

**CHANGE NO. $\Delta_3$:** Applies to instruments with serial numbers 1415A00935 and below.

**Table 6-1, Page 6-22.** Delete A8R95 and A8R96 from the A8 assembly parts list.

**Figure 7-11, Page 7-29/7-30.** Change the A8 schematic as shown in Figure 8-3.

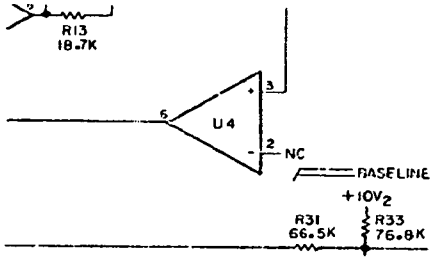


**Figure 8-3. Control Board Circuit Change.**

**CHANGE NO. $\Delta_4$:** Applies to instruments with serial numbers 1415AA00740 and below.

The new crystal used on the A2 board, Tracking Oscillator Assembly, differs in size from that used in the serial numbers listed above (see Figure 8-4 and 8-5). In order for the tie wrap to hold the new crystal, some new holes must be drilled in the A2 board.

Follow the Crystal Replacement procedure given in Section VII of the manual. While the A2 board crystal is removed, drill two holes in the A2 board about .120 inches (#31 drill bit) in diameter 1/4 inch above the existing tie wrap holes (see Figure 8-5). The new holes may now be used to secure the crystal to the board. The rest of the crystal replacement procedure is unchanged.

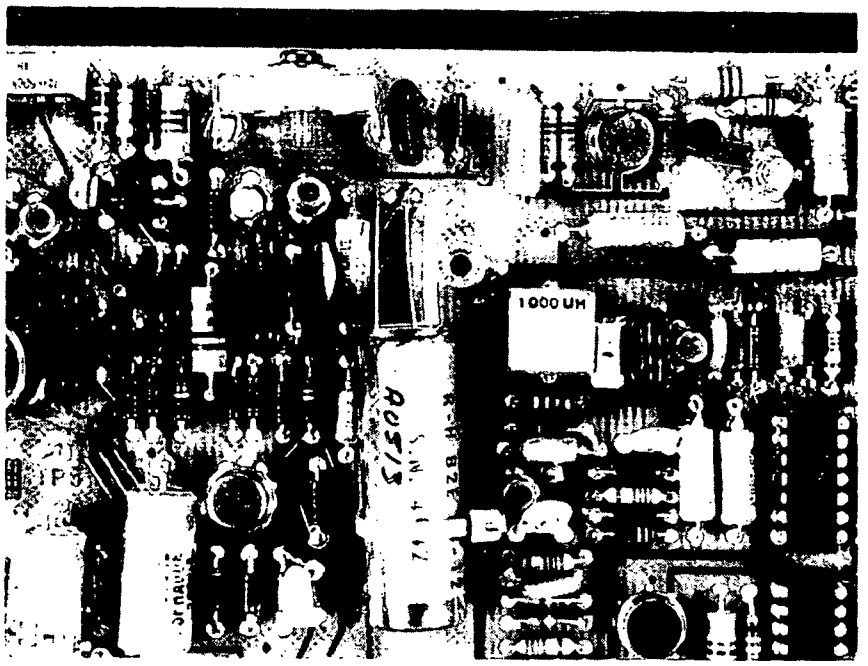


Figure 8-4. Old Style Crystal.

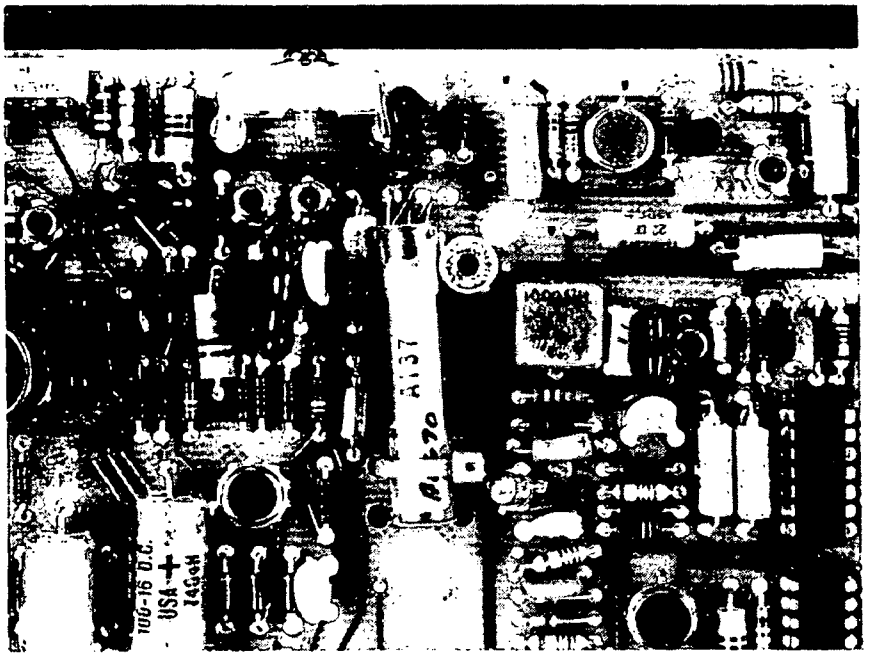

Figure 8-5. New Crystal on Modified A2 Board.

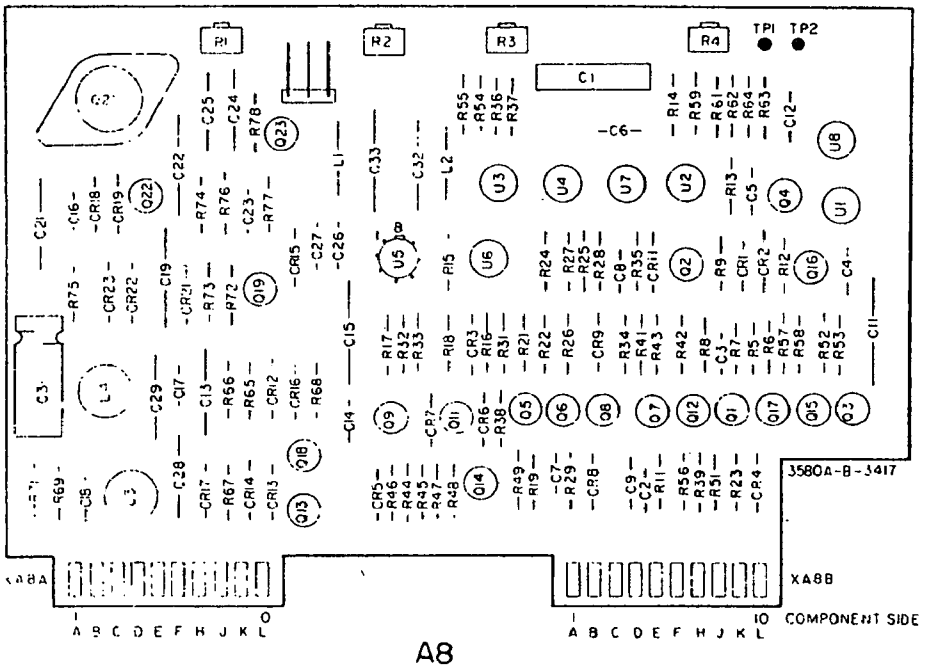


A8

*hp* Part No. 3580-66508

Rev B

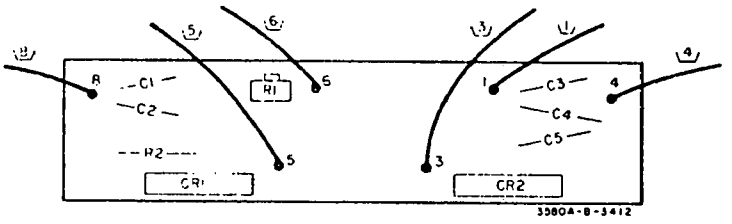


A11A1

*hp* Part No. 03580-66511

Rev A

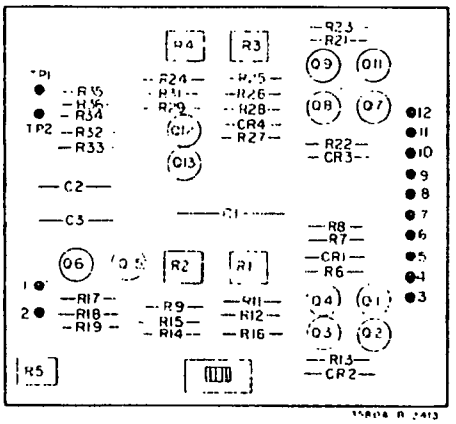


A13

*hp* Part No. 03580-66513

Rev A

03580-66517

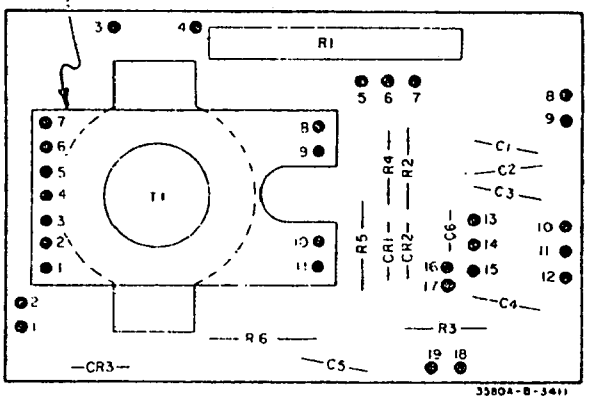


A11A2

*hp* Part No. 03580-66512

Rev. B

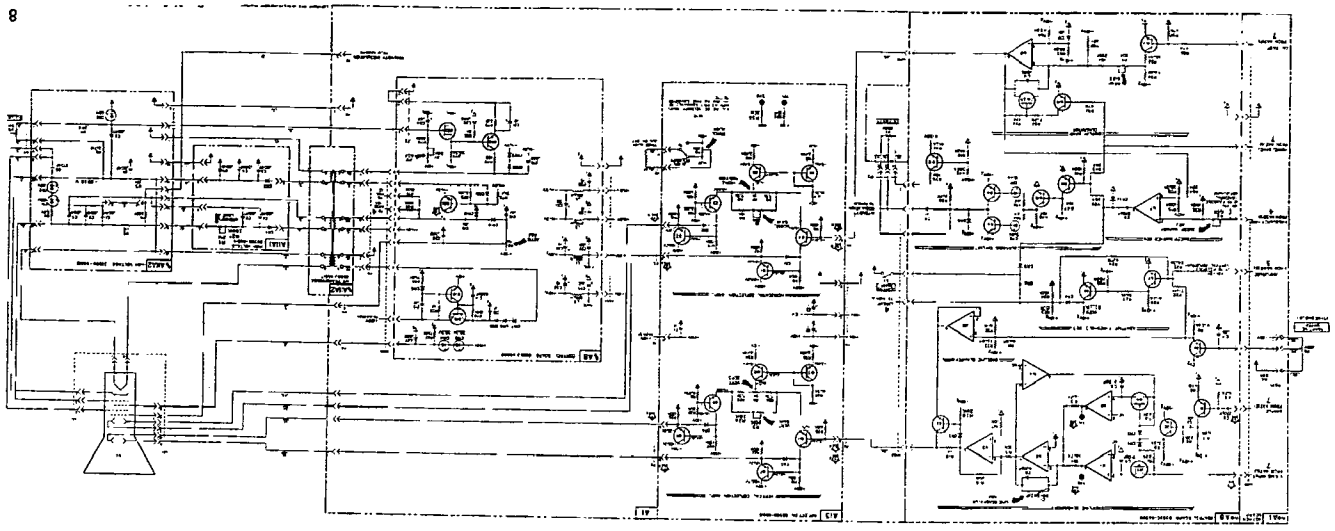

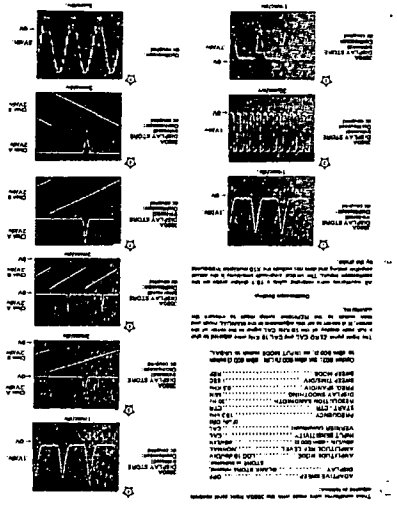

**CHANGE NO. $\Delta_5$:** Applies to instruments with serial numbers 1415A02090 and below.

**Page 6-5.** Change the part numbers of the following:

| | | |
|---|---|---|
| A2U2, 5, 8 | to | 1820-0600 |
| A2U6 | to | 1820-0594 |
| A2U11 | to | 1820-0587 |

**Page 6-7.** Change the part numbers of the following:

| | | |
|---|---|---|
| A3U5 | to | 1820-0777 |
| A3U6 | to | 1820-0595 |
| A3U7 | to | 1820-0594 |
| A3U8 | to | 1820-0583 |
| A3U9, 13, 14 | to | 1820-0588 |
| A3U11 | to | 1820-0584 |
| A3U12 | to | 1820-0587 |
| A3R52 | to | 0684-2231 |

**Page 6-20.** Change A7U15 to 1820-0947.

**Page 7-21/7-22, Figure 7-7.** Change the value of R52 on schematic 4 to 22 k ohms.

**CHANGE NO. $\Delta_6$:** Applies to instruments with serial number 1415A02010 and below.

**Page 6-3.** Change A3CR2, 3 to 0122-0059.

**Page 6-16.** Change A6F1, F2 to 2110-0343.

**CHANGE NO. $\Delta_7$:** Applies to instruments with serial number 1415A02050 and below.

**Page 6-17.** Delete 1400-0507 from the 03580-66506 Hardware List.

**Page 6-35.** Change part number 0370-2994 to 0370-2473.

**CHANGE NO. $\Delta_8$:** Applies to instruments with serial number 1415A02280 and below.

**Page 6-11.** Change the part numbers of the following:

| | | |
|---|---|---|
| A4R71 | to | 0757-0434 |
| A4R109 | to | 0698-4430 |
| A4R122B | to | 0757-0465 |

**Page 7-19/7-20, Figure 7-6.** Change the values of these components on Schematic 3:

| | | |
|---|---|---|
| R71 | to | 174 k ohms |
| R109 | to | 1.87 k ohms |

**CHANGE NO. $\Delta_9$:** Applies to instruments with serial number 1415A02140 and below.

**Page 6-33.** Delete part number 7124-2308.

**CHANGE NO. $\Delta_{10}$:** Applies to instruments with serial number 1415A01775 and below.

**Page 7-15/7-16, Figure 7-4.** Change the ground for A9C26 from ⏚ to ⏚.

**CHANGE NO. $\Delta_{11}$:** Applies to instruments having a serial number of 1415A03290 or lower.

**Page 6-5.** Change A3C24 to 0140-0149.

**Page 6-6.** Change A3R16 to 0684-1031.

**Page 7-21/7-22, Figure 7-7.** Change the following values on Schematic 4:

| | | |
|---|---|---|
| C24 | to | 470 pF |
| R16 | to | 10 k ohm |

**CHANGE NO. $\Delta_{12}$:** Applies to instruments having a serial number of 1415A03390 or lower.

**Page 6-16.** Add:

A6K1, 0490-0366, Sw-Reed
A6K1, 0490-0515, Coil Assy
A6K2, 0490-0366, Sw-Reed
A6K2, 0490-0515, Coil Assy
A6K1, 0490-1208, Reed Relay
A6K2, 0490-1208, Reed Relay

**CHANGE NO $\Delta_{13}$:** Applies to instruments having a serial number of 1415A03490 or lower.

**Page 6-34.** Under Misc. Mechanical Parts: Add 03580-23701 Rail-Rt. Side. Change the description of 03580-23702 to Frame: Left Side Rail, Quantity 1.

**CHANGE NO. $\Delta_{14}$:** Applies to instruments having a serial number of 1415A03590 or lower.

**Page 6-35.** Change R7 to 2100-0574.

**CHANGE NO. $\Delta_{15}$:** Applies to instruments having serial numbers of 1415A03440 and lower.

**Page 6-16.**

a. Delete the following parts:

A6CR26
A6CR27
A6CR28
A6CR29
A6C24
A6C30

b. Change the following parts:

| | | |
|---|---|---|
| A6C3 | to | 0180-1943 |
| A6C4 | to | 0180-1943 |
| A6C8 | to | 0180-0197 |
| A6C9 | to | 0180-0197 |
| A6C13 | to | 0180-0197 |
| A6CR7 | to | 1901-0045 |
| A6CR8 | to | 1901-0045 |
| A6CR9 | to | 1901-0045 |
| A6CR11 | to | 1901-0045 |
| A6F1 | to | 2110-0343 |
| A6F2 | to | 2110-0343 |

**Page 6-17.**

a. Change 03580-21102 to 03580-21101.

b. Change the following parts:

| | | |
|---|---|---|
| A6R7 | to | 0757-0799 |
| A6R8 | to | 0766-0014 |
| A6R9 | to | 0757-0799 |
| A6R11 | to | 0766-0014 |
| A6R19 | to | 0757-0809 |
| A6R23 | to | 0757-0809 |

c. Change the part number of INSULATOR:

| | | |
|---|---|---|
| TRANSISTOR | to | 0340-0162 |

d. Delete the following parts:

A6U3
A6U4

**Page 7-15/7-16, Figure 7-4.** Change J9A at "Cal Pwr to A2A" to J9B.

**Page 7-23/7-24, Figure 7-8.** On board A15 change R to L, L to R.

**Page 7-25.** Revise the component locator for the -hp- part number 03581-66502 as follows:

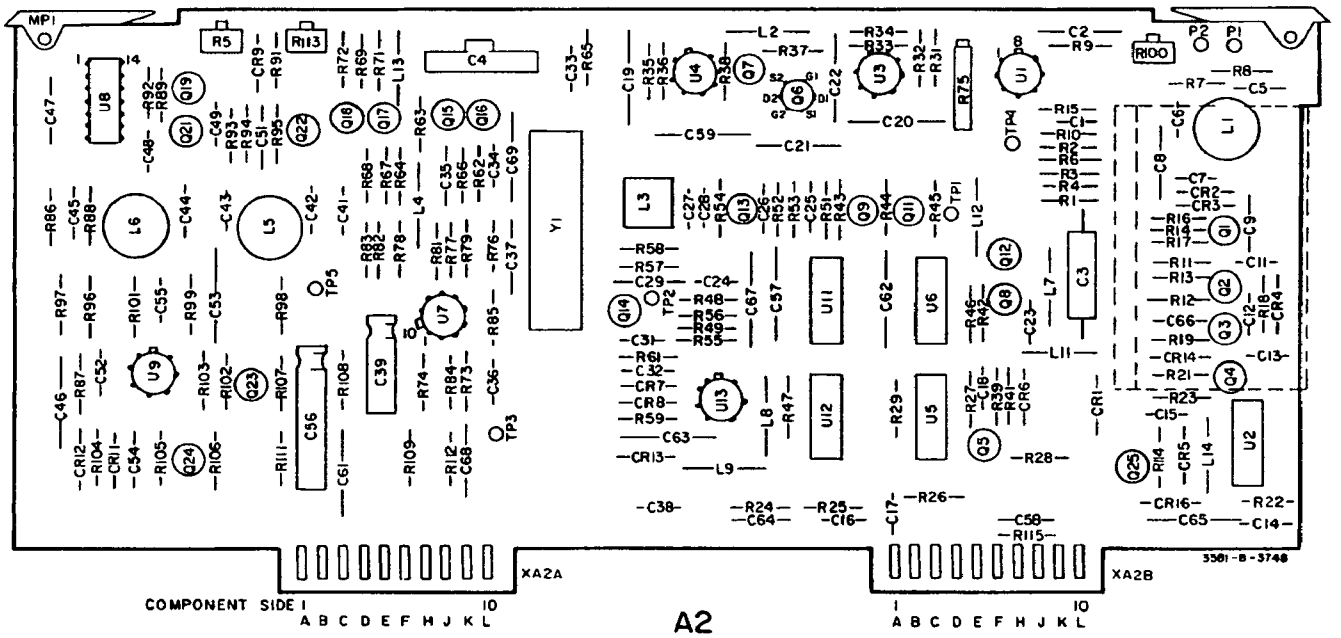


**Page 7-31/7-32, Figure 7-12.** Insert the following schematic drawing.

Figure 1-12. Low Voltage Power Supply (LVPS) Schematic and Component Location Diagrams, and Power Input Monitor (PIM) Schematic

**CHANGE NO. $\Delta_{16}$.** Applies to instruments having a serial number of 1415A04280 or lower.

**Page 7-23/7-24, Figure 7-8.** Change the component locator for the A16 board (-hp- part number 03580-66516) as follows:

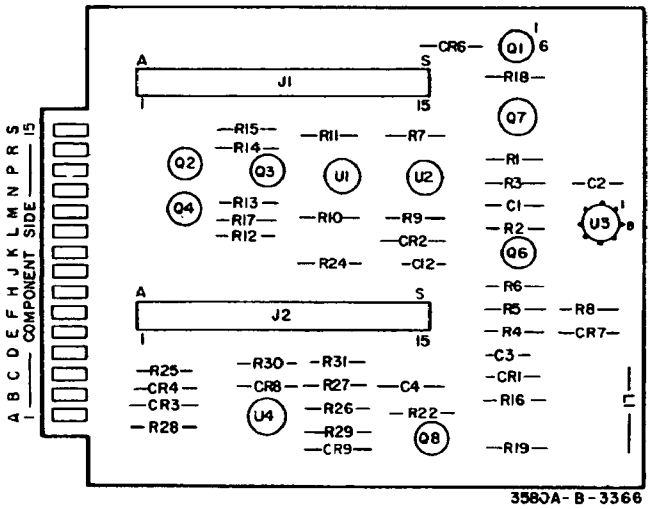


A16

*hp* Part No. 03580-66516

Rev A

**Page 1-0, Table 1-1.** Change the Frequency Dial Accuracy to ± 100 Hz, 20°C to 30°C; ± 300 Hz 0°C to 55°C.

**Page 1-2, Table 1-2.** The frequency control, dial, and stability should be as follows.

**Frequency Control:** The front panel FREQUENCY control tunes the frequency of the analyzer over the 0 Hz to 50 kHz range. The control can be used to set either the start or center frequency of linear or manual sweeps.

Coarse or Fine Tuning: Coarse tuning is selected by pushing the crank toward the front panel; fine tuning is selected by pulling the crank outward. In the coarse position, one revolution of the crank changes the frequency by approximately 2.7 kHz. In the fine position, one revolution of the crank changes the frequency by approximately 73 Hz.

**Frequency Dial:** Indicates start or center frequency in kHz.

Range: 00.0 kHz to approximately 50.8 kHz.

Resolution: 20 Hz (one minor division)

**Typical Frequency Stability:** ± 10 Hz/hr. after 1 hour; ± 5 Hz/°C

**Page 3-2, Figure 3-1.** Change items (5), (6), (7), and (8) to read as follows:

(5) FREQUENCY Dial: Indicates start or center frequency of linear or manual sweep. (Paragraph 3-99)

(6) START/CTR Switch: When set to START position, FREQUENCY dial indicates start frequency of linear or manual sweep; when set to CTR position, FREQUENCY dial indicates center frequency of linear or manual sweeps. (Paragraph 3-100)

(7) FREQUENCY Control: Tunes frequency of instrument over 0 Hz to 50 Hz range. Is used to set start or center frequency of linear or manual sweeps. Push in for coarse tuning; pull out for fine tuning. (Paragraph 3-96)

(8) ZERO CAL Potentiometer: Used to calibrate FREQUENCY dial for linear or manual sweeps and to set the correct starting point for log sweep. (Paragraph 3-102)

**Page 3-2, Figure 3-1.** The photograph of the front panel should appear as follows:

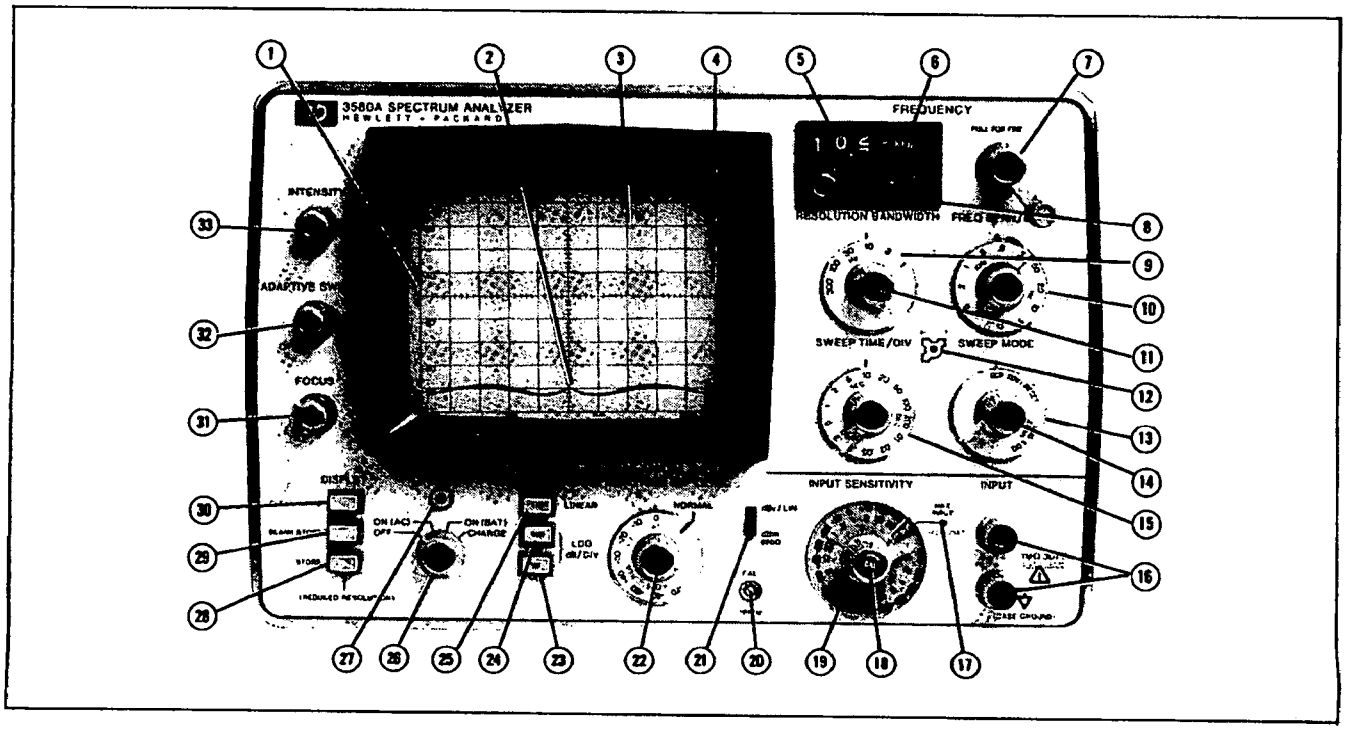

**Page 3-15.** Change paragraphs 3-97 through 3-102 to read as follows:

3-97. The front panel FREQUENCY control tunes the frequency of the analyzer over the 0 Hz to 50 kHz range. The control can be used to set either the start or center frequency of a linear sweep. The start or center frequency selected by the FREQUENCY control is indicated on the FREQUENCY dial.

3-98. The FREQUENCY control has two selectable drive ratios to permit coarse or fine tuning. Coarse tuning is selected by pushing the crank toward the front panel; fine tuning is selected by pulling the crank outward. In the coarse position, one revolution of the crank changes the FREQUENCY dial setting by approximately 2.7 kHz. In the fine position, one revolution of the crank changes the frequency by approximately 73 Hz.

**3-99. Frequency Dial.** The FREQUENCY dial indicates the start or center frequency in kHz. Dial settings range from 00.0 kHz to approximately 50.5 kHz. The frequency dial resolution is 20 Hz represented by one minor division on the frequency scale. When the instrument is properly calibrated (Paragraph 3-195), the frequency dial accuracy is:

a. ± 100 Hz when the ambient temperature is within the range of 20°C (68°F) to 30°C (86°F).

b. ± 300 Hz when the ambient temperature is within the range of 0°C (32°F) to 20°C (68°F) or 30°C (86°F) to 55°C (131°F).

**3-100. Start/Center.** With the START/CENTER slide switch in the START position, the FREQUENCY dial setting indicates the frequency represented by the first vertical line on the left-hand side of the display graticule. This is the "start frequency" or frequency at which the sweep begins. With the switch in the CENTER position, the FREQUENCY dial setting indicates the frequency represented by the center vertical line on the display graticule. This is the "center frequency" of the sweep.

3-101. When surveying a spectrum containing two or more signals, it is generally convenient to leave the START/CENTER switch in the START position. The FREQUENCY control can then be used to set the start frequency and the FREQUENCY SPAN control can be used to set the spectrum width or "end frequency". To observe one frequency component in a spectrum, set the START/CENTER switch to the CENTER position and set the FREQUENCY dial to the frequency of interest. The frequency of interest will appear in the center of the display. The width of the center frequency response can be adjusted by changing the FREQUENCY SPAN or BANDWIDTH setting.

**3-102. Zero Cal. Potentiometer.** The purpose of the ZERO CAL potentiometer is to enable the operator to compensate for slight variations in frequency dial accuracy that occur during warm-up or when the instrument is operated in an uncontrolled environment. The ZERO CAL potentiometer is also used in the Log Zero sweep mode to establish the correct starting point for the log sweep. Refer to Paragraph 3-195 for the Frequency Calibration Procedure.

**Page 3-16.** Delete the last two sentences of Paragraph 3-115.

**Page 3-17.** Change Paragraphs 3-119 through 3-124 to read as follows:

**3-119. Reset Mode.** When the Reset mode is selected, the sweep is reset to the left-hand side of the screen and the instrument remains at the *start* frequency determined by the FREQUENCY dial setting.

3-120. The Reset mode is used primarily for calibrating the FREQUENCY dial. In the Frequency Calibration Procedure (Paragraph 3-195), the Reset mode is selected and the FREQUENCY dial is set for a start frequency of 00.0 kHz. The ZERO CAL potentiometer is then adjusted so that the zero response peaks at 0 Hz on the display.

**3-121. Manual Mode.** In the Manual sweep mode, the electronic frequency sweep is disabled and frequency control is transferred to the MANUAL VERNIER potentiometer. By adjusting the MANUAL VERNIER, the frequency can be set anywhere within the selected spectrum. With the MANUAL VERNIER set fully counterclockwise, the CRT sweep is at the left-hand side of the screen and the instrument is tuned to the start frequency determined by the FREQUENCY setting. As the vernier is rotated in a clockwise direction, the frequency increases and the video information is written (and retained) on the CRT just as it is when using the electronic sweep.

3-122. The Manual sweep is useful for applications where it is necessary to precisely measure the frequency of a signal within the spectrum. For precise frequency measurements, an electronic counter is connected to the rear panel TRACKING OSC OUT or LO OUTPUT to monitor the frequency. Using a narrow bandwidth such as 10 Hz or 30 Hz, the MANUAL VERNIER is adjusted so that the CRT sweep is at the peak of the signal to be measured. If the TRACKING OSC OUT is used, the frequency of the signal can then be read directly from the counter. If the LO OUTPUT is used, the frequency must be calculated by dividing the counter reading by ten and subtracting 100 kHz (Paragraph 3-178).

NOTE

*When the SWEEP MODE setting is changed from LOG ZERO to MAN or from RESET to MAN, the frequency sweep jumps from the start frequency to the frequency set by the MANUAL VERNIER. Conversely, when the SWEEP MODE is changed from MAN to LOG*

*ZERO or from MAN to RESET, the frequency sweep jumps from the frequency set by the MANUAL VERNIER to 0 Hz or to the start frequency. In either case, the rapid change in frequency will distort the trace being displayed on the CRT. If it is desirable to retain a specific trace when switching to or from the Manual mode, set the MANUAL VERNIER fully counterclockwise before changing the SWEEP MODE setting.*

**3-123. Log Zero Mode.** The Log Zero mode is used to establish the correct starting frequency for the log sweep. When the Log Zero mode is selected, the sweep is reset to the left-hand side of the screen, the FREQUENCY and FREQUENCY SPAN controls are disabled and the start frequency is internally set to 0 Hz. To calibrate the log sweep, the front panel ZERO CAL potentiometer is adjusted to peak the zero response at the left-hand edge of the display graticule. Peaking the zero response at 0 Hz in the Log Zero mode nulls out any dc offsets in the frequency control circuit. This ensures that the log sweep will start at 20 Hz.

**3-124. Log Sweep.** When the Log sweep mode is selected, the following things take place:

a. The FREQUENCY, FREQUENCY SPAN and SWEEP TIME controls are disabled and their settings do not effect the log sweep. The ZERO CAL potentiometer remains operative and, to ensure the proper starting point for the log sweep, must be adjusted for peak zero response in the Log Zero mode.

b. The instrument sweeps logarithmically over the 20 Hz to 43 kHz frequency range. The log sweep is repetitive and the duration of each sweep is approximately 5 seconds.

NOTE

*When the Log sweep mode is first selected or when the log sweep is initiated by external triggering, optimum frequency accuracy will not be obtained until 3 or 4 continuous sweeps have been made. This peculiarity of the Log sweep is caused by dielectric absorption (soak effect) in the integrating capacitor of the Log sweep generator.*

**Page 3-27.** Change Paragraphs 3-195 through 3-198 to read the following:

**3-195. Frequency Calibration Procedure.**

3-196. The Frequency Calibration Procedure should be performed after warm-up each time the instrument is turned on. It should also be performed before and after using the log sweep.

3-197. For operation in the Repetitive, Single or Manual sweep mode, proceed as follows:

a. Turn the instrument on as outlined in Paragraph 3-192.

b. Set the 3580A controls as follows:

ADAPTIVE SWEEP ..... OFF
DISPLAY ..... STORE and BLANK STORE Released
AMPLITUDE MODE ..... LOG 10 dB/DIV
AMPLITUDE REF LEVEL ..... NORMAL
dBv/LIN - dBm Switch ..... dBv/LIN
INPUT SENSITIVITY ..... CAL
VERNIER ..... CAL (Fully CW)
FREQUENCY ..... 00.0 kHz
START CTR ..... START
BANDWIDTH ..... 30 Hz
DISPLAY SMOOTHING ..... MIN
FREQ. SPAN/DIV ..... N/A
SWEEP TIME/DIV ..... N/A
SWEEP MODE ..... RESET

c. Clear the display by pressing the CLEAR WRITE button.

d. Adjust the front panel ZERO CAL potentiometer for peak zero response. (The zero response will appear on the first line on the left-hand side of the display graticule.)

e. Set the BANDWIDTH to 10 Hz. Repeat Step d.

3-198. For operation in the Log sweep mode, proceed as follows:

a. Set the 3580A controls as follows:

ADAPTIVE SWEEP ..... OFF
DISPLAY ..... STORE and BLANK STORE Released
AMPLITUDE MODE ..... LOG 10 dB/DIV
AMPLITUDE REF LEVEL ..... NORMAL
dBv/LIN - dBm Switch ..... dBv/LIN
INPUT SENSITIVITY ..... CAL
VERNIER ..... CAL (Fully CW)
FREQUENCY ..... N/A
START CTR ..... N/A
BANDWIDTH ..... 30 Hz
DISPLAY SMOOTHING ..... MIN
FREQ. SPAN/DIV ..... N/A
SWEEP TIME/DIV ..... N/A
SWEEP MODE ..... LOG ZERO

b. Clear the display by pressing the CLEAR WRITE button.

c. Adjust the front panel ZERO CAL potentiometer for peak zero response. (The zero response will appear on the first line on the left-hand side of the display graticule.)

**Page 3-28.**

**a. Paragraph 3-201, Step b.** Change FREQUENCY to 10.0 kHz.

**b. Paragraph 3-201, Step e,** should read as follows: "Pull out the Frequency control for fine tuning. Carefully adjust the FREQUENCY control for a peak 10 kHz response in the center of the display."

**c. Paragraph 3-202, Step b.** Change FREQUENCY to 10.0 kHz.

**d. Paragraph 3-204, Step c.** Change FREQUENCY to 00.0 kHz.

**Page 3-29.**

**a. Paragraph 3-206, Step a.** The second sentence should read as follows: "Perform the Frequency Calibration Procedure (Paragraph 3-195) and the Amplitude Calibration Procedure (Paragraph 3-199).

**b. Paragraph 3-206, Step b.** Change FREQUENCY to 00.0 kHz.

**Page 3-30.**

**a. Paragraph 3-206, Step l.** The second-to-the-last sentence should read as follows: "Set the FREQUENCY dial to 20.0 kHz."

**Page 4-1.** Paragraph 4-4 should read as follows:

4-4. Refer to the Simplified Block Diagram (Figure 4-1) for the following discussion.

The 3580A can be divided into four major sections:

1) Amplitude Section
2) Frequency and Sweep Section
3) Digital Storage Section
4) Display

**Page 4-2.** Delete the discussion of the Frequency Display Section beginning in Paragraph 4-27.

**Page 4-24.** Delete the discussion of the Frequency Counter and Display beginning in Paragraph 4-167.

**Figure 4-1,** Simplified Block Diagram, should appear as on Page 8-17/8-18.

AMPLITUDE SECTION
FREQUENCY AND SWEEP SECTION
TRACKING OSC
DISPLAY

**Pages 5-1 through 5-15.** The following paragraphs in the Performance Tests should appear as follows:

## 5-9. Frequency Tests.

5-10. These tests verify part of the Frequency Characteristic Specifications listed in Table 1-1. If, for any reason, the instrument will not pass these tests, perform the Sweep Alignment and Dial Calibration (Paragraph 5-63) of the Adjustment Procedures.

### 5-11. Range and Frequency Dial Accuracy Test.

a. Position the following front panel controls:

ADAPTIVE SWEEP ..... OFF
DISPLAY ..... All pushbuttons released
AMPLITUDE MODE ..... LOG 10 dBv/DIV
AMPLITUDE REF LEVEL ..... NORMAL
dBv/LIN - dBm 600 Ω ..... dBv/LIN
INPUT SENSITIVITY ..... CAL
VERNIER (Amplitude) ..... CAL (Fully CW)
FREQUENCY ..... 00.0 kHz
START - CTR ..... START
RESOLUTION BANDWIDTH ..... 30 Hz
DISPLAY SMOOTHING ..... MIN
FREQ. SPAN/DIV ..... 0 Hz
SWEEP TIME/DIV ..... 0.2 SEC
SWEEP MODE ..... REP

Option 002: Set dBm 900 Ω/LIN - dBm 600 Ω switch to dBm 900 Ω; set INPUT MODE switch to UNBAL.

b. Adjust the front panel ZERO CAL control for a maximum display indication. Readjust the FREQUENCY control for 10, 20, 30, 40 and 50 kHz. A peak response should occur for each of these settings (± .1 kHz) to verify the Range Specifications and Frequency Dial Accuracy Specifications (20° C to 30° C) given in Table 1-1.

NOTE

*As the frequency of the peak response is approached, pull out the knob for easier tuning.*

### 5-12. Display Accuracy Tests.

a. Reposition the following front panel controls.

FREQUENCY ..... 00.0 kHz
RESOLUTION BANDWIDTH ..... 300 Hz
FREQ. SPAN/DIV ..... 5 KHz

b. The 10 kHz CAL signal and its harmonics should be repetitively swept and appear on the display as shown by Figure 5-1. The separation between the Zero Response and 50 kHz harmonic should be 10 major divisions ± 1 minor division. The separation between any two adjacent responses should be 2 major divisions ± .2 minor divisions. Momentarily push and release DISPLAY - STORE, watching the display to verify that the STORE and NON-STORE traces appear in the same position.

## 5-13. Sweep Tests.

5-14. These tests verify the Sweep Characteristics Specifications given in Table 1-1. If the instrument fails the Frequency Span Tests (Paragraph 5-15), perform the Sweep Alignment and Dial Calibration (Paragraph 5-63) of the Adjustment Procedures. If it fails only the Log Sweep Test (Paragraph 5-16), perform only the Log Sweep Adjustments (Paragraph 5-67) of the Sweep Alignment and Dial Calibration. All sweep time calibration is done with a factory selected resistor. If the instrument will not pass the Sweep Time Tests (Paragraph 5-17), refer to Section VII for additional information.

Equipment Required:

Electronic Counter (-hp- Model 5326A)

### 5-15. Frequency Span Test.

a. Position the following front panel controls: (Only those controls printed in **BOLD** require a change from the previous test.)

ADAPTIVE SWEEP ..... OFF
DISPLAY ..... All pushbuttons released
AMPLITUDE MODE ..... LOG 10 dBv/DIV
AMPLITUDE REF LEVEL ..... NORMAL
dBv/LIN - dBm 600 Ω ..... dBv/LIN
**INPUT SENSITIVITY ..... 0 dBV**
VERNIER (Amplitude) ..... CAL (Fully CW)
FREQUENCY ..... 00.0 kHz
START - CTR ..... START
RESOLUTION BANDWIDTH ..... 300 Hz
DISPLAY SMOOTHING ..... MIN
**FREQ. SPAN/DIV ..... 5 Hz**
SWEEP TIME/DIV ..... 0.2 SEC
SWEEP MODE ..... Manual

Option 002: Set dBm 900 Ω/LIN - dBm 600 Ω switch to dBm 900 Ω; set INPUT MODE switch to UNBAL.

b. Adjust MANUAL VERNIER full CCW.

c. Set the electronic counter to the frequency mode and adjust the time base/multiplier for a measurement of 1 MHz with 6 digits of resolution (1000.00 kHz). Adjust for maximum input sensitivity and either a zero trigger level or Preset. For the -hp- 5326A Counter, the controls should be set to:

| | |
|---|---|
| Sample Rate: | Fast |
| Function: | Freq. A |
| Multiplier: | $10^6$ |
| Channel A | Slope + |
| | AC |
| | Atten: X1 |
| | Level: Preset |
| BNC Input: | Sep. |

d. Connect the counter Channel A input to the L.O. OUTPUT terminal on the back panel of the 3580A.

e. Adjust the ZERO CAL for approximately a 1000.00 kHz reading on the counter. Adjust the FREQUENCY dial (pulled out for fine tuning) for a 1000.00 kHz indication on the counter.

f. Adjust MANUAL VERNIER full CW. The counter indication should be 1000.50 kHz ± .01 kHz.

g. Readjust MANUAL VERNIER full CCW. Reposition FREQ. SPAN/DIV - 10 Hz.

h. Readjust the FREQUENCY dial (pulled out for fine tuning) for a 1000.00 kHz indication on the counter.

i. Adjust MANUAL VERNIER full CW. The counter indication should be 1001.00 kHz ± .02 kHz.

j. Continue this procedure for the remaining FREQ. SPAN/DIV settings. Refer to Table 5-2 for the proper tolerances.

**Table 5-2. Frequency Span Test.**

| FREQ. SPAN/DIV | COUNTER READING | |
|---|---|---|
| | MANUAL VERNIER FULL CCW | MANUAL VERNIER FULL CW |
| 5 Hz | 1000.00 kHz | 1000.50 kHz ± .01 kHz |
| 10 Hz | 1000.00 kHz | 1001.00 kHz ± .02 kHz |
| 20 Hz | 1000.00 kHz | 1002.00 kHz ± .04 kHz |
| 50 Hz | 1000.00 kHz | 1005.00 kHz ± .10 kHz |
| .1 kHz | 1000.00 kHz | 1010.00 kHz ± .20 kHz |
| .2 kHz | 1000.00 kHz | 1020.00 kHz ± .40 kHz |
| .5 kHz | 1000.00 kHz | 1050.00 kHz ± 1.00 kHz |
| 1 kHz | 1000.00 kHz | 1100.00 kHz ± 2.00 kHz |
| 2 kHz | 1000.00 kHz | 1200.00 kHz ± 4.00 kHz |
| 5 kHz (checked in Para 5-16) | ----- | ----- |

**5-16. Log Sweep Test.**

a. Reposition the controls as follows:

INPUT SENSITIVITY ..... CAL
RESOLUTION BANDWIDTH ..... 30 Hz
SWEEP MODE ..... LOG ZERO

b. Momentarily press DISPLAY - CLEAR WRITE.

c. Adjust the ZERO CAL control for a maximum indication on the leftmost display graticule.

d. Reposition the controls as follows:

RESOLUTION BANDWIDTH ..... 300 Hz
SWEEP MODE ..... LOG

Allow time for three complete sweeps.

e. Verify that the 20 kHz harmonic of the internal CAL signal falls on the proper graticule (± 1 minor division). If the instrument will not pass this test, but passes all previous tests, perform only the Log Sweep Adjustments (Paragraph 5-67) of the Adjustment Procedures.

**5-20. Bandwidth Switching Accuracy Tests.**

a. Position the following front panel controls: (Only those controls printed in **BOLD** require a change from the previous tests.)

ADAPTIVE SWEEP ..... OFF
**DISPLAY** ..... **All pushbuttons released**
**AMPLITUDE MODE** ..... **LOG 1 dBv/DIV**
AMPLITUDE REF LEVEL ..... NORMAL
dBv/LIN - dBm 600 Ω ..... dBv/LIN
**INPUT SENSITIVITY** ..... **0 dBV**
VERNIER (Amplitude) ..... CAL (Fully CW)
**FREQUENCY** ..... **10.0 kHz**
**START - CTR** ..... **CTR**
RESOLUTION BANDWIDTH ..... 300 Hz
DISPLAY SMOOTHING ..... MIN
**FREQUENCY SPAN/DIV** ..... **5 Hz**
**SWEEP TIME/DIV** ..... 0.1 SEC
**SWEEP MODE** ..... **MANUAL**

Option 002: Set dBm 900 Ω/LIN - dBm 600 Ω switch to dBm 900 Ω; set INPUT MODE switch to UNBAL.

**b. Connect a properly terminated frequency synthesizer to the 3580A INPUT and adjust the source for a 10 kHz, 0 dBV output level (0 dBm 900 Ω for instruments with Option 002).**

NOTE

*See Table 5-3 for the proper level to use with your source. See Figure 5-2 for the proper hookup with an -hp- 3320B Frequency Synthesizer.*

c. By alternately pressing and releasing DISPLAY - CLEAR WRITE while adjusting MANUAL VERNIER, center the display indication (a narrow spike). Adjust ZERO CAL for a peak display of this spike.

d. Adjust the front panel ZERO CAL for a peak indication.

**5-24. Amplitude Reference Level Tests (Log Mode).**

NOTE

*If the instrument fails this test, see Section VII for troubleshooting information. There are no adjustments for this specification.*

a. Reposition the following front panel controls:

AMPLITUDE MODE .....LOG 10 dB/DIV
AMPLITUDE REF LEVEL .....NORMAL
INPUT SENSITIVITY..... – 10 dBV

b. Connect the digital multimeter (DC mode, 100 volt range) to the Y AXIS output of the 3580A.

c. Adjust the signal source for a - 70 dB V output (- 70 dBm 900 Ω for Option 002). (See Table 5-3 for proper levels.) Adjust the MANUAL VERNIER and ZERO CAL for a peak display. Adjust VERNIER (Amplitude) for a 1.50 volt ± .01 volt reading on the multimeter.

d. Adjust the AMPLITUDE REF LEVEL switch to the settings given in Table 5-7. Check for the proper multimeter reading.

NOTE

*MANUAL VERNIER may have to be readjusted to insure a peak display indication.*

**Table 5-7. Amplitude Ref. Level Tests (Log Mode).**

| INPUT LEVEL (10 KHz) STANDARD INSTRUMENT | INPUT LEVEL (10 KHz) OPTION 002 900 Ω | AMPLITUDE REF. LEVEL | MULTIMETER READING |
|---|---|---|---|
| - 70 dBv | - 70 dBm | - 10 dB | 2.00 V ± .02 V |
| - 70 dBv | - 70 dBm | - 20 dB | 2.50 V ± .02 V |
| - 70 dBv | - 70 dBm | - 30 dB | 3.00 V ± .03 V |
| - 70 dBv | - 70 dBm | - 40 dB | 3.50 V ± .03 V |
| - 70 dBv | - 70 dBm | - 50 dB | 4.00 V ± .04 V |
| - 70 dBv | - 70 dBm | - 60 dB | 4.50 V ± .04 V |
| - 70 dBv | - 70 dBm | - 70 dB | 5.00 V ± .05 V |

e. Disconnect the multimeter from the 3580A.

**5-26. Frequency Response Tests.**

a. Reposition the following front panel controls:

AMPLITUDE MODE .....LOG 10 dB/DIV
AMPLITUDE REF LEVEL ..... - 30 dB
INPUT SENSITIVITY
(according to white marker) ..... 0 dB
RESOLUTION BANDWIDTH ..... 3 Hz

b. Adjust the signal source for a 10 kHz 0 dBv output (0 dBm 900 Ω for Option 002). (See Table 5-3).

c. By alternately pressing and releasing DISPLAY-CLEAR WRITE while adjusting MANUAL VERNIER, center the display indication (a narrow spike). Adjust ZERO CAL for a peak display of this spike.

d. Reposition the following front panel control:

AMPLITUDE MODE .....LOG 1 dB/DIV

e. Readjust MANUAL VERNIER for a peak display.

f. Adjust VERNIER (Amplitude) for a - 1 dB display (1 dB/div).

**g. Adjust the signal source to the frequencies given in Table 5-10 (refer to Table 5-3) for an INPUT SENSITIVITY of 0 dB. At each frequency, adjust the FREQUENCY dial to that of the source. Then, slowly adjust the ZERO CAL for a peak display indication. Momentarily press DISPLAY-CLEAR WRITE. Check for proper level as given in Table 5-10. Note: The display is calibrated 1 dB per major division.**

h. Repeat Steps e through g for an INPUT SENSITIVITY and source levels of - 10 dB, - 20 dB, - 30 dB and - 40 dB (according to white marker and with a - 30 dB AMPLITUDE REF LEVEL). Consult Table 5-3 and Table 5-10 for the proper input level and frequencies to use. At the start of each new INPUT SENSITIVITY, always recalibrate the instrument at 10 KHz with CAL 10 KHz.

**5-27. Internal Calibrator Test.**

a. Reposition the following front panel controls:

VERNIER (Amplitude) ..... CAL
AMPLITUDE REF LEVEL.....NORMAL
INPUT SENSITIVITY .....- 20 dB
FREQUENCY ..... 00.0 kHz
START - CTR. ..... START
RESOLUTION BANDWIDTH ..... 300 Hz
FREQ. SPAN/DIV. ..... 5 kHz
SWEEP TIME/DIV ..... 0.2 SEC
SWEEP MODE .....REP

b. Adjust the signal source for a 10 KHz - 20 dBv (- 20 dBm 900 Ω if Option 002) output. (See Table 5-3 for proper level.)

c. Adjust the ZERO CAL for a display response on the 10 KHz graticule (2 major divisions from left graticule). (After each trial adjustment, allow 2 seconds for the next sweep before verifying the accuracy of the adjustment.)

d. Adjust the CAL 10 KHz for a full scale 0 dB display. (After each trial adjustment, allow 2 seconds for the next sweep before verifying the accuracy of the adjustment.)

e. Reposition the following front panel control:

INPUT SENSITIVITY .....CAL

f. Verify that the 10 KHz harmonic of the CAL signal appears 2 major divisions from left graticule with a full scale 0 dB level (± .15 dB). (1 dB = 1 major division.)

### 5-28. Bandwidth Tests.

5-29. This test verifies the bandwidth specifications of Table 1-1. If the instrument will not pass this test, perform the IF Filter Alignment (Paragraph 5-70) of the Adjustment Procedures.

Equipment Required:

Frequency Synthesizer (-hp- Model 3320B, 50 ohms)
50 Ohm Termination (-hp- 11048C)

a. Position the following front panel controls. (Only those controls printed in **BOLD** require a change from the previous test.)

ADAPTIVE SWEEP ..... OFF
DISPLAY ..... All pushbuttons released
**AMPLITUDE MODE ..... LOG 10 dBv/DIV**
AMPLITUDE REF LEVEL ..... NORMAL
dBv/LIN - dBm 600 Ω ..... dBv/LIN
**INPUT SENSITIVITY ..... - 20 dB**
VERNIER (Amplitude) ..... CAL (Fully CW)
**FREQUENCY ..... 10.0 KHz**
**START - CTR ..... CTR**
RESOLUTION BANDWIDTH ..... 300 Hz
DISPLAY SMOOTHING ..... MIN
**FREQUENCY SPAN/DIV ..... 50 Hz**
SWEEP TIME/DIV ..... 0.2 SEC
**SWEEP MODE ..... MANUAL**

Option 002: Set dBm 900 Ω/LIN - dBm 600 Ω switch to dBm 900 Ω; set INPUT MODE switch to UNBAL.

b. By alternately pressing and releasing DISPLAY - CLEAR WRITE while adjusting MANUAL VERNIER, center the display indication (a narrow spike).

c. Connect a properly terminated frequency synthesizer to the input of the 3580A. Adjust the synthesizer for a 10 kHz - 20 dBv signal (- 20 dBm 900 Ω for Option 002) output. (See Table 5-3.) Momentarily press DISPLAY - CLEAR WRITE.

d. Adjust the FREQUENCY dial (pulled out for fine tuning) for a peak display indication.

e. Reposition the following front panel controls:

AMPLITUDE MODE ..... LOG 1 dB/DIV

f. Readjust the FREQUENCY dial (fine tune position) for a peak display indication of the 10 KHz input. Adjust CAL 10 KHz for a full scale 0 dB display, if not already so adjusted.

g. Slowly rotate MANUAL VERNIER CW until the display dot has dropped 3 dB in amplitude. (Remember, the display is calibrated 1 dB/DIV). This is the upper 3 dB point of the filter.

h. Momentarily press DISPLAY - CLEAR WRITE. Slowly increase the frequency of the source. The dot will move to a full scale display and then down to the lower 3 dB point of the filter.

i. Note the frequency of the source at this lower 3 dB point ___ Hz. This frequency, less the original 10 KHz start frequency, is the 3 dB bandwidth of the 300 Hz filter. It should be 300 Hz ± 45 Hz.

j. Repeat Steps f through i for the 100 Hz, 30 Hz and 10 Hz filters. See Table 5-11 for the start frequency of the source, FREQUENCY dial setting, RESOLUTION BANDWIDTH, FREQ. SPAN/DIV, and the test limits. At the start of each new bandwidth setting, always center the display with MANUAL VERNIER, and adjust the FREQUENCY dial, and CAL 10 KHz for a full scale, peak display at the appropriate start frequency. Then make the appropriate adjustments for the upper and lower 3 dB points.

k. Using Table 5-12 and the same technique used for the 300 Hz, 100 Hz, 30 Hz, and 10 Hz Bandwidths, test the 60 dB Bandpass of the 3 Hz and 1 Hz filters. However, use

AMPLITUDE MODE ..... LOG 10 dB/DIV

and measure the frequency difference between the 60 dB points. As before, always adjust the FREQUENCY dial and CAL 10 KHz for a peaked full scale display before **attempting to measure the 60 dB bandwidths. If the display is noisy at the 60 dB points, use Display Smoothing..... Max. Note: The display is now calibrated 10 dB/DIV.**

### 5-32. Noise Level Tests.

a. Connect the 1 kΩ resistor across the INPUT terminals of the 3580A. Disconnect all signal sources.

b. Position the following front panel controls: (Only those controls printed in **BOLD** require a change from the previous tests).

ADAPTIVE SWEEP ..... OFF
DISPLAY ..... All pushbuttons released
AMPLITUDE MODE ..... LOG 10 dBv/DIV
AMPLITUDE REF LEVEL ..... NORMAL
dBv/LIN - dBm 600 Ω ..... dBv/LIN
**INPUT SENSITIVITY ..... - 70 dB**
VERNIER (Amplitude) ..... CAL (Fully CW)
**FREQUENCY ..... 00.0 kHz**
**START - CTR ..... START**
**RESOLUTION BANDWIDTH ..... 300 Hz**

DISPLAY SMOOTHING ..... MAX
FREQ. SPAN/DIV ..... 5 KHz
SWEEP TIME/DIV ..... 5 SEC
SWEEP MODE .....MANUAL

Option 002: Set dBm 900 Ω/ LIN - dBm 600 Ω switch to dBm 900 Ω; set INPUT MODE switch to UNBAL.

c. Adjust the MANUAL VERNIER full CCW. Adjust ZERO CAL for a peak display indication.

d. Adjust the MANUAL VERNIER for a display indication at 10 KHz (2 major divisions from left graticule). Momentarily press the following control:

DISPLAY .....CLEAR WRITE

e. The display indication should always be less than - 130 dB (6 major divisions down from top graticule, since Full Scale = - 70 dB).

f. Reposition the following front panel control:

RESOLUTION BANDWIDTH ..... 30Hz

g. Momentarily press the following control:

DISPLAY .....CLEAR WRITE

The display indication should be less than - 140 dB (7 major divisions down from top graticule).

h. Reposition the following control:

FREQ. SPAN/DIV .....0.1 KHz

i. Adjust MANUAL VERNIER full CCW. Adjust ZERO CAL for a peak display indication.

j. Adjust MANUAL VERNIER for a display indication at 100 Hz (1 major division from leftmost graticule). Momentarily press the following control:

DISPLAY .....CLEAR WRITE

k. The display indication should be less than - 132 dB (6.2 major divisions down from top graticule).

l. Adjust MANUAL VERNIER for a display indication of 1 KHz (far right graticule). Momentarily press the following control:

DISPLAY .....CLEAR WRITE

m. The display indication should be less than - 140 dB (7 major divisions down from top graticule).

n. Reposition the following control:

RESOLUTION BANDWIDTH ..... 1 Hz

Momentarily press the following control:

DISPLAY .....CLEAR WRITE

o. The display indication should be less than - 150 dB (8 major divisions down from top graticule).

p. Readjust MANUAL VERNIER for a display indication at 100 Hz (1 major division from leftmost graticule). Momentarily press the following control:

DISPLAY .....CLEAR WRITE

q. The indication should be less than - 143 dB (7.3 major divisions down from top graticule).

r. Reposition the following controls:

DISPLAY SMOOTHING ..... MIN
FREQ. SPAN/DIV ..... 5 Hz

s. Adjust MANUAL VERNIER full CCW. Momentarily press the following front panel control:

DISPLAY ..... CLEAR WRITE

t. Adjust ZERO CAL for a peak response at the leftmost graticule. Reposition the following front panel control:

DISPLAY SMOOTHING .....MAX

u. Adjust the MANUAL VERNIER for a display indication at 10 Hz (2 major divisions from leftmost graticule). Momentarily press the following control:

DISPLAY .....CLEAR WRITE

v. The display indication should be less than - 135 dB (6.5 major divisions down from top graticule). Remove the 1 kΩ resistor from the input terminals.

**5-33. Noise Sideband Test.**

a. Reposition the following controls:

INPUT SENSITIVITY .....CAL
FREQUENCY ..... 10.0 kHz
START - CTR .....CTR
DISPLAY SMOOTHING ..... MIN
FREQ. SPAN/DIV .....5 Hz
SWEEP TIME/DIV ..... 10 SEC

b. By alternately pressing and releasing DISPLAY - CLEAR WRITE while adjusting MANUAL VERNIER, center the display indication (a narrow spike).

c. Adjust the FREQUENCY dial (pulled out for fine tuning) for a peak display of this spike.

d. Reposition the following controls:

SWEEP MODE ..... SING

e. After waiting for the sweep to be completed (100 sec.), verify that the noise on the display ± 10 Hz (± 2 major divisions) away from the 10 KHz CAL signal (in center of display) is at least 70 dB below the CAL signal.

**5-34. Spurious Response Test.**

a. Reposition the following controls:

INPUT SENSITIVITY ..... - 20 dB
FREQUENCY ..... 00.0 Hz
START - CTR ..... START
RESOLUTION BANDWIDTH ..... 30 Hz
FREQ. SPAN/DIV ..... 2 KHz
SWEEP TIME/DIV ..... 5 SEC
SWEEP MODE ..... RESET

b. Momentarily press:

DISPLAY ..... CLEAR WRITE

c. Adjust ZERO CAL for a peak display on the leftmost display graticule.

d. Reposition the following controls:

SWEEP MODE ..... MANUAL

and momentarily press:

DISPLAY ..... CLEAR WRITE

e. Connect the frequency synthesizer (use proper output impedance needed for the bandpass filter) to the input of the bandpass filter. Adjust the filter for a 5 kHz center frequency and adjust the synthesizer for a 5 kHz output. (For a 50 ohm source and the White 2640 filter, connect a 550 Ω resistor (± 10%) in series between the filter and synthesizer. This gives the 600 Ω source impedance required by the White filter (See Figure 5-3).

f. Connect the output of the filter to the input of the 3580A. Always terminate properly if required. (The White Model 2640 filter requires no output termination. See Figure 5-3).

g. Adjust MANUAL VERNIER for a display indication at 5 kHz (2 1/2 major divisions from left graticule). Adjust the source level for a - 20 dBv (full scale) input to the 3580A (For the White 2640 filter and a 50 Ω source, this corresponds to - 16.99 dBm 50 Ω level on the source). Readjust MANUAL VERNIER for a peak display. Adjust CAL 10 KHz for a full scale display.

h. Reposition the following controls:

SWEEP MODE ..... SING

i. After waiting for one complete sweep (50 sec.) verify that all responses other than the zero response are at least 80 dB below the 5 kHz response.

**5-35. Line Related Spurious Test.**

Specification: > 80 dB below input reference level or - 140 dBV (0.1 μV).

a. Disconnect the Synthesizer and Bandpass Filter from the 3580A Input. Turn off all unnecessary equipment located near the 3580A. This especially includes large current users such as soldering irons, blowers, moters, etc.

b. Using a short piece of wire, connect a short across the 3580A INPUT terminals.

c. Reposition the following controls:

INPUT SENSITIVITY ..... - 70 dB
RESOLUTION BANDWIDTH ..... 3 Hz
FREQ. SPAN/DIV ..... 5 Hz
SWEEP MODE ..... MAN
MANUAL VERNIER ..... centered
DISPLAY SMOOTHING ..... MAX
START-CTR ..... CTR

d. Connect the LO OUTPUT (rear panel) to the input of an Electronic Counter (-hp- Model 5326A).

NOTE

*If the power-line frequency is 50 Hz, substitute the following Counter readings for Steps e and f.*

*Step e and f: 1000.48 kHz to 1000.52 kHz*
*Step e and f: 1000.98 kHz to 1001.02 kHz*
*Step e and f: 1001.48 kHz to 1001.52 kHz*

e. With the FREQUENCY control pulled out for fine tuning, tune the 3580A frequency for a Counter reading between 1000.58 kHz and 1000.62 kHz.

f. Press CLEAR WRITE, then slowly turn the MANUAL VERNIER to obtain a peak reading. The peak should be more than 70 dB below full scale (- 140 dBV).

g. Repeat Steps e and f substituting 1001.18 kHz to 1001.22 kHz, and 1001.78 kHz to 1001.82 kHz for the Counter readings.

DISPLAY SMOOTHING ..... MIN
FREQ.SPAN/DIV ..... 20 Hz

NOTE

*If the instrument fails this test double check that the input short is as small as possible; that all power line current is kept at a minimum, and that all covers are tightly secured on the 3580A.*

**5-36. IF Feedthru and Zero Beat Response Tests.**

5-37. These tests verify the ability of the instrument to reject a 100 kHz signal at the input and also how well the

Zero Beat Response is suppressed. Proceed to the Mixer Balance Adjustments (Paragraph 5-81) of the Adjustment Procedures if the Zero Beat Response is too large. Proceed to Section VII for troubleshooting information if there is too much IF Feedthru.

Equipment Required:

Frequency Synthesizer (-hp- Model 3320B, 50 ohm)

a. Reconnect the synthesizer to the 3580A. Do not terminate. Adjust the source for a 10 volt 100 kHz output (+ 26.99 dBm 50 ohms setting on 3320B and unterminated).

b. Position the following front panel controls: (Only those controls printed in **BOLD** require a change from the previous test).

ADAPTIVE SWEEP ..... OFF
DISPLAY ..... All pushbuttons released
AMPLITUDE MODE ..... LOG 10 dBv/DIV
AMPLITUDE REF LEVEL ..... NORMAL
dBv/LIN - dBm 600 Ω ..... dBv/LIN
**INPUT SENSITIVITY** ..... **+ 20 dB**
VERNIER (Amplitude) ..... CAL (Fully CW)
FREQUENCY ..... 00.0 kHz
START - CTR ..... START
RESOLUTION BANDWIDTH ..... 3 Hz
DISPLAY SMOOTHING ..... MIN
FREQ. SPAN/DIV ..... 20 Hz
SWEEP TIME/DIV ..... 5 SEC
SWEEP MODE ..... MANUAL

Option 002: Set dBm 900 Ω/LIN - dBm 600 Ω switch to dBm 900 Ω; set INPUT MODE switch to UNBAL.

c. Adjust MANUAL VERNIER for a response in the center of the screen. The display indication should be at least 70 dB below full scale to verify the IF Feedthru specification of Table 1-1. If the instrument fails this test, see Section VII for troubleshooting information.

d. Disconnect the synthesizer. Reposition the following front panel controls:

RESOLUTION BANDWIDTH ..... 300 Hz
FREQ. SPAN/DIV ..... 5 KHz
SWEEP MODE ..... RESET

e. Momentarily press the following front panel control:

DISPLAY ..... CLEAR WRITE

f. Adjust ZERO CAL for a maximum display indication on the left graticule. This display should be at least 30 dB (3 major divisions) below full scale to verify the Zero Beat Response specification of Table 1-1. If the instrument fails this test, go to the Mixer Balance Adjustments (Paragraph 5-81) of the Adjustment Procedures.

**5-38. Input Impedance Tests.**

5-39. These tests verify the Input Impedance characteristics of Table 1-2. Since there is no adjustment for this parameter, see Section VII for troubleshooting information if the instrument fails this test.

Equipment required:

1 MΩ ± 1% film resistor (-hp- Part No. 0757-0344)

a. Position the following front panel controls. (Only those controls printed in **BOLD** require a change from the previous tests.)

ADAPTIVE SWEEP ..... OFF
DISPLAY ..... All pushbuttons released
AMPLITUDE MODE ..... LOG 10 dBv/DIV
AMPLITUDE REF LEVEL ..... NORMAL
dBv/LIN - dBm 600 Ω ..... dBv/LIN
**INPUT SENSITIVITY** ..... **0 dB**
VERNIER (Amplitude ..... CAL (Fully CW)
FREQUENCY ..... 00.0 kHz
START - CTR ..... START
DISPLAY SMOOTHING ..... MIN
**RESOLUTION BANDWIDTH** ..... **10 Hz**
**FREQ. SPAN/DIV** ..... **1 KHz**
SWEEP TIME/DIV ..... 5 SEC
SWEEP MODE ..... RESET

Option 002: Set dBm 900 Ω/LIN - dBm 600 Ω switch to dBm 900 Ω; set INPUT MODE switch to UNBAL.

b. Adjust ZERO CAL for a peak display on the left graticule.

c. Reposition the following front panel controls:

AMPLITUDE MODE ..... LOG 1 dB/DIV
SWEEP MODE ..... MANUAL

d. Connect the rear panel TRACKING OSC OUT to the front INPUT terminals of the 3580A. Adjust the rear panel TRACKING OSC LEVEL control fully CW. Adjust MANUAL VERNIER for a 1 kHz display indication (1 major division from left graticule). Readjust the TRACKING OSC LEVEL control for a full scale 0 dB display. Momentarily press the following control:

DISPLAY ..... CLEAR WRITE

e. Connect the 1 MΩ resistor in series between the TRACKING OSC OUT and front panel INPUT terminals. The display indication should drop 6 dB ± .3 dB (6 major divisions ± .3 major divisions) to verify an input impedance of 1 MΩ.

f. Reposition the following front panel control:

INPUT SENSITIVITY ..... - 10 dB

g. Readjust the rear panel TRACKING OSC LEVEL control for a full scale display. Adjust MANUAL VERNIER for a display indication at 10 kHz (far right display graticule). DO NOT REMOVE 1 MΩ RESISTOR. Momentarily press the following front panel control:

DISPLAY ..... CLEAR WRITE

h. 1) Std. 3580A: The amplitude should drop 3 dB ± 1 dB, verifying that the input shunt capacitance is 30 pF, nominal.

2) Option 002: The amplitude should drop 4 dB ± 1 dB, verifying that the input shunt capacitance is 40 pF, nominal.

i. Disconnect the cable connected between the TRACKING OSC OUT and the front panel INPUT terminals.

**5-40. Output Tests.**

5-41. These tests verify the Output specifications of the 3580A listed in Table 1-1.

Equipment Required:

Electronic Counter (-hp- Model 5326A)
Digital Multimeter (-hp- Model 34740/34702)
Distortion Analyzer (-hp- Model 333A)

**5-42. TRACKING OSC OUTPUT Tests.**

a. Position the following front panel controls. (Only those controls printed in **BOLD** require a change from the previous tests).

ADAPTIVE SWEEP ..... OFF
DISPLAY ..... All pushbuttons released
**AMPLITUDE MODE ..... LOG 10 dBv/DIV**
AMPLITUDE REF LEVEL ..... NORMAL
dBv/LIN - dBm 600 Ω ..... dBv/LIN
**INPUT SENSITIVITY ..... + 20 dB**
VERNIER (Amplitude) ..... CAL (Fully CW)
FREQUENCY ..... 00.0 kHz
START - CTR ..... START
RESOLUTION BANDWIDTH ..... 10 Hz
DISPLAY SMOOTHING ..... MIN
**FREQ. SPAN/DIV ..... 5 KHz**
SWEEP TIME/DIV ..... 5 SEC
**SWEEP MODE ..... RESET**

Option 002: Set dBm 900 Ω/LIN - dBm 600 Ω switch to dBm 900 Ω; set INPUT MODE switch to UNBAL.

b. Momentarily press DISPLAY - CLEAR WRITE. Adjust the ZERO CAL for a peak display (on leftmost display graticule).

c. Connect the multimeter (AC mode 100 volt range) to the rear panel TRACKING OSC OUT. Adjust the FREQUENCY dial for 50 Hz (300 Hz for Option 002). Adjust the rear panel TRACKING OSC LEVEL control for a 2.00 volt reading on the multimeter.*

d. Adjust the FREQUENCY control to 50.0 kHz (20.0 kHz for Option 002 instruments). Verify that the multimeter reads 2.00 volts ± .06 volts (± .1 volts for Option 002 instruments).

e. Reposition the following front panel controls:

AMPLITUDE MODE ..... LIN
INPUT SENSITIVITY ..... 2 V
FREQUENCY ..... 00.0 Hz
RESOLUTION BANDWIDTH ..... 30 Hz
SWEEP MODE ..... MANUAL

f. Connect the rear panel TRACKING OSC OUT to the front panel INPUT terminals. Momentarily press the following control:

DISPLAY ..... CLEAR WRITE

g. By alternately pressing and releasing DISPLAY - CLEAR WRITE while adjusting MANUAL VERNIER, center the display indication (a narrow spike).

h. Adjust the rear panel TRACKING OSC LEVEL control for a full scale 2 V display. Reposition the following front panel control:

RESOLUTION BANDWIDTH ..... 3 Hz

i. The display indication should drop no lower than 1 V (5 major divisions) to verify the frequency accuracy of the tracking oscillator. If the tracking oscillator frequency is out of tolerance, remove the top cover and adjust A2C4 for a peak display indication.

j. Reposition the following front panel control:

FREQ. SPAN/DIV ..... 0.1 KHz

k. Adjust MANUAL VERNIER for a 1 KHz display indication (indication on far right display graticule). Momentarily press the following front panel control:

DISPLAY ..... CLEAR WRITE

l. Connect the TRACKING OSC OUT to the INPUT of

*For measurements below 50 Hz, use a low frequency Digital Voltmeter such as the -hp- Model 3480/3484 with true rms.

the distortion analyzer. Adjust the TRACKING OSC LEVEL control fully CW.

m. Reference the TRACKING OSC OUT to 0 dB on the distortion analyzer. (For the -hp- 333A Distortion Analyzer, position the following controls:

FUNCTION ..... SET LEVEL
METER RANGE ..... 0 dB
FREQUENCY RANGE ..... X100
FREQUENCY ..... 10 (1 kHz)
HIGH PASS FILTER ..... OUT

Adjust the SENSITIVITY and VERNIER controls of the distortion analyzer for a 0 dB meter indication. Set the distortion analyzer FUNCTION switch to DISTORTION.)

n. Measure the distortion in dB by nulling the distortion analyzer.

o. Adjust the FREQUENCY and BALANCE controls for a meter null. Use automatic nulling if available.

p. The total distortion indication should be at least 40 dB below the reference level. If it is not, perform the Mixer Balance Adjustments (Paragraph 5-81). Disconnect the distortion analyzer from the 3580A.

**5-46. Common Mode Rejection Test.**

a. Position the following front panel controls:

ADAPTIVE SWEEP ..... OFF
DISPLAY ..... All pushbuttons released
**AMPLITUDE MODE ..... LOG 10 dBv/DIV**
AMPLITUDE REF LEVEL ..... NORMAL
dBm 900 Ω/LIN - dBm 600 Ω .....
- dBm 900 Ω/LIN
**INPUT SENSITIVITY ..... 0 dB**
VERNIER (Amplitude) ..... CAL
(Fully CW)
**INPUT MODE ..... BRDG**
FREQUENCY ..... 00.0 kHz
START - CTR ..... START
**RESOLUTION BANDWIDTH ..... 3 Hz**
DISPLAY SMOOTHING ..... MIN
**FREQ. SPAN/DIV ..... 10 Hz**
SWEEP TIME/DIV ..... 5 SEC
**SWEEP MODE ..... RESET**

b. Disconnect all inputs to the 3580A. Momentarily press the following front panel control:

DISPLAY ..... CLEAR WRITE

c. Adjust the ZERO CAL control for a peak display at the leftmost graticule of the CRT. Reposition the following front panel control:

SWEEP MODE ..... MANUAL

d. Adjust the frequency synthesizer for a 60 Hz, +5 dBm 900 Ω output (+ 17.55 dBm/50 ohms). Connect the synthesizer (properly terminated) to the INPUT of the 3580A.

e. Slowly adjust MANUAL VERNIER to the 60 Hz signal which will appear as a peak on the sixth major division from the left. Momentarily press the following front panel control:

DISPLAY ..... CLEAR WRITE

f. Adjust the VERNIER (Amplitude) for a full scale 0 dB display.

g. Disconnect the synthesizer from the 3580A and connect two 453 ohm resistors in series between the INPUT terminals. (See Figure 5-4)

h. Connect the synthesizer to the junction of the two resistors and to the chassis on the rear panel as shown in Figure 5-4. (Do not change the synthesizer amplitude setting.)

i. The display indication on the 3580A should be at least 70 dB below full scale (10 dB/DIV).

**5-47. Frequency Response Test.**

a. Disconnect the resistors from the 3580A INPUT terminals and reconnect the synthesizer (properly terminated in 50 ohms). Adjust the source for a 0 dBm 900 Ω (+ 12.55 dBm 50 Ω) 10 kHz signal.

b. Reposition the following front panel controls:

FREQUENCY ..... 10.0 kHz
START - CTR ..... CTR
VERNIER (Amplitude) ..... Fully CW

c. By alternately pressing and releasing DISPLAY - CLEAR WRITE while adjusting MANUAL VERNIER, center the display indication (a narrow spike). Adjust the FREQUENCY dial (pulled out for fine tuning) for a peak display of the 10 kHz input signal.

d. Reposition the following front panel control:

AMPLITUDE MODE ..... LOG 1 dB/DIV

e. Readjust the FREQUENCY dial for a peak display indication. Adjust VERNIER (Amplitude) for a full scale - 1 dB display indication (1 major division down from full scale).

f. Adjust the frequency synthesizer and 3580A FREQUENCY dial to the frequencies given by Table 5-13. Always peak the display indication with the FREQUENCY dial and check for proper amplitude accuracy.

**Pages 5-16 through 5-28.** The following items in the Adjustment Procedures should appear as follows:

## 5-48. ADJUSTMENT PROCEDURE.

5-49. This portion of Section V contains complete Adjustment Procedures for the Model 3580A Spectrum Analyzer:

POWER SUPPLY CHECKS AND ADJUSTMENTS (Paragraph 5-53).

DISPLAY ADJUSTMENTS (Paragraph 5-68).

SWEEP ALIGNMENT AND DIAL CALIBRATION (Paragraph 5-63).

LINE GENERATOR ADJUSTMENTS (Paragraph 5-68).

I.F. FILTER ALIGNMENT (Paragraph 5-70).

AMPLITUDE CALIBRATION (Paragraph 5-74).

MIXER BALANCE ADJUSTMENTS (Paragraph 5-81).

ADAPTIVE SWEEP MARKER ADJUSTMENT (Paragraph 5-84).

### 5-62. Trace Alignment Adjustment.

a. Position the 3580A front panel controls as follows:

ADAPTIVE SWEEP .....Centered
DISPLAY ..... All pushbuttons released
AMPLITUDE MODE .....LOG 10 dB/DIV
AMPLITUDE REF LEVEL .....NORMAL
dBv/LIN - dBm 600 Ω .....dBv/LIN
INPUT SENSITIVITY ..... -30 dB
VERNIER (Amplitude) .....CAL
(Fully CW)
FREQUENCY ..... 00.0 Hz
START - CTR .....START
RESOLUTION BANDWIDTH ..... 300 Hz
DISPLAY SMOOTHING .....MIN
FREQ. SPAN/DIV ..... 0.2 KHz
SWEEP TIME/DIV ..... 0.1 SEC
SWEEP MODE .....REP

Option 002: Set dBm 900 Ω/LIN - dBm 600 Ω switch to dBm 900 Ω; set INPUT MODE switch to UNBAL.

b. Adjust the front panel ADAPTIVE SWEEP for a line in the middle of the display. Adjust the front panel FOCUS control for the narrowest and sharpest line.

c. Adjust A13R5 (TRACE ALIGN) for a level trace. If unable to achieve this, switch A13S1 and readjust A13R5.

### 5-63. Sweep Alignment and Dial Calibration.

5-64. These adjustments calibrate the front panel FREQUENCY dial plus align the frequency sweep limits. They should be done if the Frequency Tests (Paragraph 5-9) or Sweep Tests (Paragraph 5-13) of the Performance Tests cannot be passed by the instrument. In addition, the adjustment should be made if the high voltage supply was previously adjusted.

### 5-65. Recommended Test Equipment.

Digital Multimeter (-hp- Model 34740A and 34702A plug-on)
Electronic Counter (-hp- Model 5326A)
Oscilloscope (-hp- Model 180A with 1801A and 1820A plug-ins)

### 5-66. Linear Sweep Adjustments.

a. Position the following front panel controls: (Only those controls printed in **BOLD** require a change from the previous adjustments).

**ADAPTIVE SWEEP** .....**OFF**
DISPLAY ..... All pushbuttons released
AMPLITUDE MODE .....LOG 10 dB/DIV
dBv/LIN - dBm 600 Ω .....dBv/LIN
**INPUT SENSITIVITY** .....**CAL**
VERNIER (Amplitude) .....CAL
(Fully CW)
FREQUENCY ..... 00.0 kHz
START - CTR .....START
RESOLUTION BANDWIDTH ..... 300 Hz
DISPLAY SMOOTHING .....MIN
**FREQ. SPAN/DIV** ..... **0 kHz**
SWEEP TIME/DIV ..... 0.1 SEC
**SWEEP MODE** ..... **LOG ZERO**

Option 002: Set dBm 900 Ω/LIN - dBm 600 Ω switch to dBm 900 Ω; set INPUT MODE switch to UNBAL.

b. Connect the multimeter (DC mode, 1 volt range) to the wiper of the front panel ZERO CAL pot (center terminal of pot). Adjust the front panel ZERO CAL pot for a dc reading on the multimeter of 0 ± 100 mV.

c. Set the counter to the Frequency Mode and adjust the time base/multiplier for a measurement of 1 MHz with 6 digits of resolution (1000.00 kHz). Adjust for maximum input sensitivity and either a zero trigger Level or Preset. For the -hp- Model 5326A Counter, the controls should be set to:

| | |
|---|---|
| Sample Rate: | Fast |
| Function: | Freq. |
| Multiplier | $10^6$ |
| Channel A: | Slope + |

DC
Atten: X1.
BNC Input: Sep.

Connect the counter Channel A Input to the LO Output terminal on the back of the 3580A, and adjust the Level control until the LO frequency is displayed.

d. Remove the inner circuit board shield (covering A2–A5). Connect the multimeter (DC mode 100 volt range) to A2TP4.

e. Adjust A2L3 (100 kHz FREQ. ADJ.) for a reading of 1000.00 kHz ± .1 kHz on the counter. (100 kHz FREQ. ADJ. can be reached through side of circuit board card nest.)

f. Adjust A2L1 (100 kHz VCO ADJ.) for a voltage reading on the multimeter between -1.5 V and -1.7 V. Record the reading.

g. Repeat Steps e and f as necessary to meet the frequency and voltage specifications.

h. Set the SWEEP MODE control to MANUAL and turn the MANUAL VERNIER control fully counterclockwise (CCW).

i. Adjust A14R27 (DIAL LOW END ADJ.) for a display of 1000.00 kHz ± .01 kHz on the counter.

j. Reposition the following front panel control:

FREQ. SPAN/DIV ..... 5 kHz

k. Adjust A3R54 (INTEGRATOR BALANCE) for a display of 1000.00 kHz ± .01 kHz on the counter.

l. Position the front panel MANUAL VERNIER control fully clockwise (CW).

m. Adjust A2R75 (BUFFER AMP GAIN ADJ.) for a display of 1500.00 kHz ± .01 kHz on the counter.

n. Adjust A2R100 (VCO RANGE SET) for a reading on the multimeter equal to that obtained in Step f (± 10 mV).

o. Repeat Steps m and n as necessary to meet the frequency and voltage specifications.

p. Position the front panel MANUAL VERNIER fully CCW.

q. Reposition the following front panel control:

FREQUENCY ..... 50.0 kHz

r. Adjust A14R25 (DIAL HIGH END SET) for a display of 1500.00 kHz ± .01 kHz on the counter.

s. Reposition the following front panel control:

FREQUENCY ..... 00.0 kHz

t. Readjust A14R27 (DIAL LOW END ADJ.) for a display of 1000.00 kHz ± .01 kHz on the counter.

u. Repeat Steps q through t as necessary to meet the frequency specifications.

v. Adjust the front panel FREQUENCY dial for 0, 10, 20, 30, 40 and 50 kHz. The corresponding frequency counter reading should be 1 MHz, 1.1 MHz, 1.2 MHz etc. with a tolerance of ± 1 kHz.

w. Reposition the following front panel controls: :

FREQUENCY ..... 00.0 kHz
RESOLUTION BANDWIDTH ..... 300 Hz
SWEEP TIME/DIV ..... 2 SEC
SWEEP MODE ..... REP

x. Adjust A13R1 (HORIZONTAL GAIN ADJ.) and A13R2 (HORIZONTAL POSITION ADJ.) for a full 10 cm display. The 10 kHz signal and its harmonics should fall on the proper graticule marking ± 1/2 minor divisions (2nd, 4th, 6th, 8th and 10th graticule from the left).

y. Connect the input of the oscilloscope to A3TP11. Set the oscilloscope input to dc coupling. Connect a jumper between A3TP3 and A3TP4.

z. Adjust the A3R14 (RAMP COMPARATOR BALANCE) so that the output of the ramp comparator (on scope) just changes states.

aa. Remove the jumpers from the A3 board.

ab. Reposition the following front panel control:

SWEEP TIME/DIV ..... 0.1 sec

ac. Alternately press and release the STORE pushbutton, adjusting A8R4 (RAMP SIZE ADJ.) so that the 40 kHz harmonic of the CAL signal falls on the same point for both the STORE and non-STORE display modes.

**5-67. Log Sweep Adjustments.**

a. Position the following front panel controls: (Only those controls printed in BOLD require a change from the previous adjustments).

ADAPTIVE SWEEP ..... OFF
**DISPLAY ..... All pushbuttons released**
AMPLITUDE MODE ..... LOG 10 dB/DIV
AMPLITUDE REF LEVEL ..... NORMAL
dBv/LIN - dBm 600 Ω ..... dBv/LIN
INPUT SENSITIVITY ..... CAL
VERNIER (Amplitude) ..... CAL (Fully CW)

FREQUENCY ..... 00.0 kHz
START - CTR. ..... START
RESOLUTION BANDWIDTH ..... .300 Hz
DISPLAY SMOOTHING. ..... .MIN
FREQ. SPAN/DIV. ..... .5 kHz
**SWEEP TIME/DIV** ..... **0.5 SEC**
**SWEEP MODE** ..... **.LOG ZERO**

Option 002: Set dBm 900 Ω/LIN - dBm 600 Ω switch to dBm 900 Ω; set INPUT MODE switch to UNBAL.

b. Momentarily push:

DISPLAY ..... .CLEAR WRITE

Adjust the front panel ZERO CAL pot for a peak at the left graticule. If the peak is off the screen, adjust A13R3 for an on screen indication.

c. Reposition the following front panel control:

SWEEP MODE ..... .LOG

d. Allow the 3580A to make three complete sweeps. Then adjust A3R76 (20 kHz LOG SWEEP ADJ.) so that the 20 kHz harmonic of the CAL signal falls on the 20 kHz LOG SWEEP graticule.

NOTE

*After each adjustment of A3R76, wait for the 3580A to sweep through 20 kHz before attempting to readjust the setting.*

**5-68. Line Generator Adjustments.**

5-69. This adjustment properly aligns the line generator circuitry. The adjustment is usually not necessary, but should be done if components in the high voltage power supply are changed, or if the display exhibits overshoot to abrupt level changes.

a. Position the following front panel controls: (Only those controls printed in **BOLD** require a change from the previous adjustments).

ADAPTIVE SWEEP ..... .OFF
DISPLAY ..... All pushbuttons released
AMPLITUDE MODE ..... .LOG 10 dB/DIV
AMPLITUDE REF LEVEL ..... .NORMAL
dBv/LIN - dBm 600 Ω ..... .dBv/LIN
INPUT SENSITIVITY ..... .CAL
VERNIER (Amplitude) ..... .CAL
(Fully CW)
**FREQUENCY** ..... **10.0 kHz**
**START - CTR** ..... **.CTR**
RESOLUTION BANDWIDTH ..... 300 Hz
DISPLAY SMOOTHING ..... .MIN
**FREQ. SPAN/DIV** ..... **0.2 KHz**
**SWEEP TIME/DIV** ..... **0.1 SEC**
SWEEP MODE ..... .MANUAL

Option 002: Set dBm 900 Ω/LIN - dBm 600 Ω switch to dBm 900 Ω; set INPUT MODE switch to UNBAL.

b. Adjust MANUAL VERNIER for a peak display signal. Note: The Amplitude VERNIER may have to be adjusted to keep the signal within the display limits.

c. Momentarily press:

DISPLAY ..... .CLEAR WRITE

**5-72. Tracking Oscillator and Center Frequency Adjustments.**

a. Position the following front panel controls: (Only those controls printed in **BOLD** require a change from the previous adjustments).

ADAPTIVE SWEEP ..... .OFF
DISPLAY ..... All pushbuttons released
**AMPLITUDE MODE** ..... **.LINEAR**
AMPLITUDE REF LEVEL ..... .NORMAL
dBv/LIN - dBm 600 Ω ..... .dBv/LIN
**INPUT SENSITIVITY** ..... **+ 20 dB**
VERNIER (Amplitude) ..... .CAL
(Fully CW)
FREQUENCY ..... 10.0 kHz
**START - CTR** ..... **.START**
DISPLAY SMOOTHING ..... .MIN
**RESOLUTION BANDWIDTH** ..... **1 Hz**
**FREQ. SPAN/DIV** ..... **0.5 KHz**
**SWEEP TIME/DIV** ..... **.0.5 SEC.**
SWEEP MODE ..... .MANUAL

Option 002: Set dBm 900 Ω/LIN - dBm 600 Ω switch to dBm 900 Ω; set INPUT MODE switch to UNBAL.

**5-73. Symmetry Adjustments.**

a. Position the following front panel controls: (Only those controls printed in **BOLD** require a change from the previous adjustments).

ADAPTIVE SWEEP ..... .OFF
DISPLAY ..... All pushbuttons released
**AMPLITUDE MODE** ..... **.LOG 10 dB/DIV**
AMPLITUDE REF LEVEL ..... .NORMAL
dBv/LIN - dBm 600 Ω ..... .dBv/LIN
**INPUT SENSITIVITY** ..... **.CAL**
VERNIER (Amplitude) ..... .CAL
(Fully CW)
FREQUENCY ..... 10.0 kHz
**START - CTR** ..... **.CTR**
**RESOLUTION BANDWIDTH** ..... **30 Hz**
DISPLAY SMOOTHING ..... .MIN
FREQ. SPAN/DIV ..... 0.5 KHz
**SWEEP TIME/DIV** ..... **0.1 SEC**
SWEEP MODE ..... .MANUAL

OPTION 002: Set dBm 900 Ω/LIN - dBm 600 Ω switch to dBm 900 Ω; set INPUT MODE switch to UNBAL.

c. Fine tune the FREQUENCY dial for a maximum display indication.

i. Adjust MANUAL VERNIER while pressing and releasing DISPLAY - CLEAR WRITE for a spike display indication in the center of the screen. Adjust the front panel FREQUENCY dial for a maximum display indication.

**5-77. Linear and Log Gain Adjustments.**

a. Position the following front panel controls: (Only those controls printed in **BOLD** require a change from the previous adjustments).

ADAPTIVE SWEEP . . . . . OFF
DISPLAY . . . . . All pushbuttons released
**AMPLITUDE MODE . . . . . LOG 10 dB/DIV**
AMPLITUDE REF LEVEL . . . . . .NORMAL
dBv/LIN - dBm 600 Ω . . . . . .dBv/LIN
**INPUT SENSITIVITY . . . . . -20 dB**
VERNIER (Amplitude) . . . . . CAL (Fully CW)
FREQUENCY . . . . . 10.0 kHz
START - CTR . . . . . CTR
RESOLUTION BANDWIDTH . . . . . .300 Hz
DISPLAY SMOOTHING . . . . . .MIN
**FREQ. SPAN/DIV. . . . . 0.5 kHz**
SWEEP TIME/DIV . . . . . 0.1 SEC
SWEEP MODE . . . . . .MANUAL

Option 002: Set dBm 900 Ω/LIN - dBm 600 Ω switch to dBm 900 Ω; set INPUT MODE switch to UNBAL.

**5-78. Bandwidth Gain Switching Adjustments.**

a. Position the following front panel controls: (Only those controls printed in **BOLD** require a change from the previous adjustments).

ADAPTIVE SWEEP . . . . . OFF
DISPLAY . . . . . All pushbuttons released
AMPLITUDE MODE . . . . . .LINEAR
AMPLITUDE REF LEVEL . . . . . .NORMAL
dBv/LIN - dBm 600 Ω . . . . . .dBv/LIN
INPUT SENSITIVITY . . . . . -20 dB
VERNIER (Amplitude) . . . . . CAL (Fully CW)
FREQUENCY . . . . . 10.0 kHz
START - CTR . . . . . CTR
DISPLAY SMOOTHING . . . . . .MIN
RESOLUTION BANDWIDTH . . . . . .300 Hz
**FREQ. SPAN/DIV. . . . . .50 Hz**
SWEEP TIME/DIV . . . . . 0.1 SEC
**SWEEP MODE . . . . . .MANUAL**

d. Adjust MANUAL VERNIER and the front panel ZERO CAL pot for a peak reading in the center of the display. Make the following full scale adjustments on the appropriate bandwidth setting.

NOTE

*The ZERO CAL pot may have to be readjusted after each Bandwidth/Freq. Span setting for a peak reading in the center of the screen.*

**5-79. Frequency Response Adjustments.**

a. Position the following front panel controls: (Only those controls printed in **BOLD** require a change from the previous adjustments.

ADAPTIVE SWEEP . . . . . OFF
DISPLAY . . . . . All pushbuttons released
**AMPLITUDE MODE . . . . . 1 dB/DIV**
AMPLITUDE REF LEVEL . . . . . .NORMAL
dBv/LIN - dBm 600 Ω . . . . . .dBv/LIN
INPUT SENSITIVITY . . . . . -20 dB
VERNIER (Amplitude) . . . . . CAL (Fully CW)
**FREQUENCY . . . . . 01.0 kHz**
START - CTR . . . . . CTR
**RESOLUTION BANDWIDTH . . . . . .300 Hz**
DISPLAY SMOOTHING . . . . . .MIN
**FREQ. SPAN/DIV. . . . . 0.2 kHz**
SWEEP TIME/DIV . . . . . 0.1 SEC
**SWEEP MODE . . . . . .REP**
Option 002: Set dBm 900 Ω/LIN - dBm 600 Ω switch to dBm 900 Ω; set INPUT MODE switch to UNBAL.

b. Adjust the frequency synthesizer for 1 kHz output at - 20 dBV (- 20 dBm 900 Ω for Option 002), and connect it to the 3580A INPUT (properly terminated). Adjust the front panel CAL 10 KHz for a full scale (0 dB) display.

c. Reposition the following front panel controls:

FREQUENCY . . . . . 40.0 kHz
INPUT SENSITIVITY . . . . . - 10 dB

**5-84. Adaptive Sweep Marker Adjustment.**

5-85. This adjustment properly positions the ADAPTIVE SWEEP marker. If the marker (blank spot on screen) does not appear at the same point on the display as new information being written onto the display, do this adjustment:

a. Position the following front panel controls: (Only those controls printed in **BOLD** require a change from the previous adjustments).

ADAPTIVE SWEEP . . . . . OFF (Fully CCW)
DISPLAY . . . . . All pushbuttons released
AMPLITUDE MODE . . . . . LOG 10 dBV/DIV
AMPLITUDE REF LEVEL . . . . . .NORMAL
dBv/LIN - dBm 600 Ω . . . . . .dBv/LIN
**INPUT SENSITIVITY . . . . . .CAL**

VERNIER (Amplitude) ..... CAL
(Fully CW)
**FREQUENCY ..... 00.0 kHz**
START - CTR ..... START
RESOLUTION BANDWIDTH ..... 300 Hz
DISPLAY SMOOTHING ..... MIN
**FREQ. SPAN/DIV ..... 2 kHz**
**SWEEP TIME/DIV ..... .1 SEC**
**SWEEP MODE ..... MAN**

Option 002: Set dBm 900 Ω/LIN - dBm 600 Ω switch to dBm 900 Ω; set INPUT MODE switch to UNBAL.

b. Adjust the MANUAL VERNIER control until the trace is at the peak of the 10 kHz signal.

c. Momentarily press the DISPLAY-CLEAR WRITE button. A dot should remain at the top of the scope.

d. Turn the ADAPTIVE SWEEP on and adjust A8R3 (SWEEP MARKER ADJ.) until the sweep marker (blank spot in trace) blanks out the dot at the top of the scope.

**Page 5-27/5-28, Figure 5-8** should appear as on Page 8-33/8-34.

**Performance Test Card.** The following items in the Performance Test Card (following Page 5-27/5-28) should appear as follows:

FREQUENCY SPAN TESTS

| Frequency Span/Div. | Counter Reading (Manual Vernier Fully CW) | Test Limits |
|---|---|---|
| 5 Hz | _____ kHz | 1000.50 kHz ± .01 kHz |
| 10 Hz | _____ kHz | 1001.00 kHz ± .02 kHz |
| 20 Hz | _____ kHz | 1002.00 kHz ± .04 kHz |
| 50 Hz | _____ kHz | 1005.00 kHz ± .10 kHz |
| .1 kHz | _____ kHz | 1010.00 kHz ± .20 kHz |
| .2 kHz | _____ kHz | 1020.00 kHz ± .40 kHz |
| .5 kHz | _____ kHz | 1050.00 kHz ± 1.00 kHz |
| 1 kHz | _____ kHz | 1100.00 kHz ± 2.00 kHz |
| 2 kHz | _____ kHz | 1200.00 kHz ± 4.00 kHz |

RANGE AND FREQUENCY DIAL ACCURACY TESTS

| Ideal Frequency Dial Setting | Actual Setting for a Peak | Test Limits |
|---|---|---|
| 10 kHz | _____ kHz | ± .1 kHz |
| 20 kHz | _____ kHz | ± .1 kHz |
| 30 kHz | _____ kHz | ± .1 kHz |
| 40 kHz | _____ kHz | ± .1 kHz |
| 50 kHz | _____ kHz | ± .1 kHz |

Figure 5-1. Test Points and Adjustment Locations

**Page 6-31, 6-32, and 6-33** should be as follows:

| Reference Designation | HP Part Number | Qty | Description | Mfr Code | Mfr Part Number |
|---|---|---|---|---|---|
| A13R33 | 0698-4435 | | R:FXD FLM 2.49K OHM 1% 1/8W | 28480 | 0698-4435 |
| A13R34 | 0698-4435 | | R:FXD FLM 2.49K OHM 1% 1/8W | 28480 | 0698-4435 |
| A13R35 | 0757-0467 | 2 | R:FXD MET FLM 121K OHM 1% 1/8W | 28480 | 0757-0467 |
| A13R36 | 0757-0476 | 1 | R:FXD MET FLM 301K OHM 1% 1/8W | 28480 | 0757-0476 |
| A13S1 | 3101-1162 | 1 | SWITCH:SLIDE MINIATURE, SPDT | 79727 | GF124-0008 |
| A14 | 03580-66514 | 1 | BOARD ASSY:BANDWIDTH SWITCH | 28480 | 03580-66514 |
| A14C4 | 0180-0197 | | C:FXD ELECT 2.2 UF 10% 20VDCW | 56289 | 150D225X9020A2-DYS |
| A14C5 | 0180-0373 | 1 | C:FXD ELECT 0.68 UF 10% 35VDCW | 56289 | 150D684X9035A2-DYS |
| A14C6 | 0180-1735 | | C:FXD ELECT 0.22 UF 10% 35VDCW | 28480 | 0180-1735 |
| A14C7 | 0180-2050 | 1 | C:FXD TANT, 0.082 UF 10% 35VDCW | 56289 | 150D823X9035A2-DYS |
| A14C8 | 0180-1701 | | C:FXD ELECT 6.8 UF 20% 6VDCW | 28480 | 0180-1701 |
| A14C9 | 0160-0162 | | C:FXD MY 0.022 UF 10% 200VDCW | 56289 | 192P22392-PTS |
| A14C12 | 0180-0106 | | C:FXD ELECT 60 UF 20% 6VDCW | 28480 | 0180-0106 |
| A14C15 | 0180-0339 | | C:FXD AL ELECT 50 UF +75-10% 15VDCW | 56289 | 30D506G015CB2-DSM |
| A14CR1 | 1902-0777 | | DIODE:BREAKDOWN 6.2V 5% | 04713 | 1N825 |
| A14R1 | 0698-3453 | 1 | R:FXD MET FLM 196K OHM 1% 1/8W | 28480 | 0698-3453 |
| A14R2 | 0698-4488 | | R:FXD FLM 26.7K OHM 1% 1/8W | 28480 | 0698-4488 |
| A14R3 | 0698-3558 | | R:FXD MFT FLM 4.02K OHM 1% 1/8W | 28480 | 0698-3558 |
| A14R4 | 0698-3519 | | R:FXD MET FLM 12.4K OHM 1% 1/8W | 28480 | 0698-3519 |
| A14R5 | 0698-3228 | | R:FXD MET FLM 49.9K OHM 1% 1/8W | 28480 | 0698-3228 |
| A14R6 | 0757-0473 | 1 | R:FXD MET FLM 221K OHM 1% 1/8W | 28480 | 0757-0473 |
| A14R7 | 0684-1051 | | R:FXD COMP 1MEGOHM 1% 1/4W | 01121 | CB 1051 |
| A14R8 | 0684-2251 | | R:FXD COMP 2.2 MEGOHM 10% 1/4W | 01121 | CB 2251 |
| A14R9 | 0684-1041 | | R:FXD COMP 100K OHM 10% 1/4W | 01121 | CB 1041 |
| A14R10 | 0684-3941 | 1 | R:FXD COMP 390K OHM 10% 1/4W | 01121 | CB 3941 |
| A14R11 | 0698-5102 | 1 | R:FXD COMP 1.2 MEGOHM 10% 1/4W | 01121 | CB 1251 |
| A14R12 | 0698-4443 | | R:FXD FLM 4.53K OHM 1% 1/8W | 28480 | 0698-4443 |
| A14R13 | 0757-0454 | 1 | R:FXD MFT FLM 33.2K OHM 1% 1/8W | 28480 | 0757-0454 |
| A14R14 | 0698-4506 | 1 | R:FXD FLM 73.2K OHM 1% 1/8W | 28480 | 0698-4506 |
| A14R15 | 0698-3459 | 1 | R:FXD MFT FLM 383K OHM 1% 1/8W | 28480 | 0698-3459 |
| A14R16 | 0698-4524 | 3 | R:FXD FLM 174K OHM 1% 1/8W | 28480 | 0698-4524 |
| A14R17 | 0757-0442 | | R:FXD MET FLM 10.0K OHM 1% 1/8W | 28480 | 0757-0442 |
| A14R18 | 0698-4441 | | R:FXD MFT FLM 3.74K OHM 1% 1/8W | 28480 | 0698-4441 |
| A14R19 | 0698-4427 | 1 | R:FXD FLM 1650 OHM 1% 1/8W | 28480 | 0698-4427 |
| A14R20 | 0698-4511 | 3 | R:FXD FLM 86.6K OHM 1.0% 1/8W | 28480 | 0698-4511 |
| A14R21 | 0757-0456 | 3 | R:FXD MET FLM 43.2K OHM 1% 1/8W | 28480 | 0757-0456 |
| A14R22 | 0757-0446 | | R:FXD MET FLM 15.0K OHM 1% 1/8W | 28480 | 0757-0446 |
| A14R23 | 0757-0415 | 1 | R:FXD MET FLM 475 OHM 1% 1/8W | 28480 | 0757-0415 |
| A14R24 | 0757-0407 | | R:FXD MET FLM 200 OHM 1% 1/8W | 28480 | 0757-0407 |
| A14R25 | 2100-3123 | 1 | R:VAR CERMET 500 OHM 10% TYPE P 3/4W | 28480 | 2100-3123 |
| A14R26 | 0698-5673 | 1 | R:FXD MET FLM 3.9K OHM 1% 1/8W | 28480 | 0698-5673 |
| A14R27 | 2100-3161 | 1 | R:VAR CERMET 20K OHM 10% TYPE P 3/4W | 28480 | 2100-3161 |
| A14R28 | 0698-3279 | | R:FXD MET FLM 4990 OHM 1% 1/8W | 28480 | 0698-3279 |
| A14R31 | 0698-4511 | | R:FXD FLM 86.6K OHM 1.0% 1/8W | 28480 | 0698-4511 |
| A14R32 | 0698-4500 | 2 | R:FXD FLM 57.6K OHM 1% 1/8W | 28480 | 0698-4500 |
| A14R33 | 0757-0456 | | R:FXD MET FLM 43.2K OHM 1% 1/8W | 28480 | 0757-0456 |
| A14R34 | 0757-0123 | 1 | R:FXD MFT FLM 34.8K OHM 1% 1/8W | 28480 | 0757-0123 |
| A14R35 | 0698-3455 | 2 | R:FXD MET FLM 261K OHM 1% 1/8W | 28480 | 0698-3455 |
| A14R36 | 0757-0468 | 1 | R:FXD FLM 130K OHM 1% 1/8W | 28480 | 0757-0468 |
| A14R37 | 0698-7802 | 2 | R:FXD FLM 523K OHM 1.0% 1/8W | 28480 | 0698-7802 |
| A14R38 | 0757-0272 | | R:FXD FLM 52.3K OHM 1% 1/8W | 28480 | 0757-0272 |
| A14R39 | 0698-4502 | 1 | R:FXF FLM 64.9K OHM 1% 1/8W | 28480 | 0698-4502 |
| A14R40 | 0698-3228 | | R:FXD MET FLM 49.9K OHM 1% 1/8W | 28480 | 0698-3228 |
| A14R41 | 0698-3215 | 1 | R:FXD FLM 499K OHM 1.0% 1/8W | 28480 | 0698-3215 |
| A14R42 | 0698-3228 | | R:FXD MET FLM 49.9K OHM 1% 1/8W | 28480 | 0698-3228 |
| A14R43 | 0698-3279 | | R:FXD MET FLM 4990 OHM 1% 1/8W | 28480 | 0698-3279 |
| A14R44 | 0698-4524 | | R:FXD FLM 174K OHM 1% 1/8W | 28480 | 0698-4524 |
| A14R45 | 0698-4542 | 1 | R:FXD FLM 453K OHM 1% 1/8W | 28480 | 0698-4542 |
| A14R46* | 0698-3540 | | R: FXD MET FLM 15.4 K OHM 1% 1/8W | 16299 | C4-1/8-TO-1542-F |
| A14R101 | 0757-0448 | | R: FXD MET FLM 15.0 K OHM 1% 1/8W | 28480 | 0757-0446 |
| A14R102 | 0698-3572 | | R:FXD FLM 60.4K OHM 1% 1/8W | 28480 | 0698-3572 |
| A14R103 | 0698-4518 | | R:FXD FLM 137K OHM 1% 1/8W | 28480 | 0698-4518 |
| A14R104 | 0698-3456 | 1 | R:FXD MET FLM 287K OHM 1% 1/8W | 28480 | 0698-3456 |
| A14R105 | 0757-0486 | | R:FXD MET FLM 750K OHM 1% 1/8W | 28480 | 0757-0486 |
| A14R106 | 0698-5904 | 1 | R:FXD FLM 1.58 MEGOHM 1.0% 1/2W | 28480 | 0698-5904 |
| A14R107 | 0698-7094 | 1 | R:FXD MET FLM 3.32 MEGOHM 1% 1/4W | 28480 | 0698-7094 |
| A14R108 | 0698-7091 | 1 | R:FXD MET FLM 10 MEGOHM 1% 1/2W | 28480 | 0698-7091 |
| A14R109 | 0698-5675 | 2 | R:FXD MET FLM 30 MEGOHM 1% 1W | 28480 | 0698-5675 |
| A14R110 | 0698-5675 | | R:FXD MET FLM 30 MEGOHM 1% 1W | 28480 | 0698-5675 |
| A14S1 | 03580-61901 | 1 | SWITCH ASSY | 28480 | 03580-61901 |

| Reference Designation | HP Part Number | Qty | Description | Mfr Code | Mfr Part Number |
|---|---|---|---|---|---|
| A14S1 | 3100-2740 | 1 | SWITCH:ROTARY | 28480 | 3100-2740 |
| A14S1 | 3100-2736 | 1 | SWITCH:ROTARY | 28480 | 3100-2736 |
| A14S2 | 3100-2740 | 1 | SWITCH:BANDWIDTH | 28480 | 3100-2740 |
| A14U1 | 1826-0304 | 1 | IC LF 355 OP AMP | 27014 | LF355H |
| A15 | 03580-66515 | 1 | BOARD ASSY:SWEEP SWITCH | 28480 | 03580-66515 |
| A15R1 | 0698-7802 | | R:FXD FLM 523K OHM 1.0% 1/8W | 28480 | 0698-7802 |
| A15R2 | 0757-0403 | | R:FXD MET FLM 121 OHM 1% 1/8W | 28480 | 0757-0403 |
| A15R3 | 0757-0410 | | R:FXD MET FLM 301 OHM 1% 1/8W | 28480 | 0757-0410 |
| A15R4 | 0757-0161 | | R:FXD FLM 604 OHM 1% 1/8W | 28480 | 0757-0161 |
| A15R5 | 0757-0274 | | R:FXD MET FLM 1.21K OHM 1% 1/8W | 28480 | 0757-0274 |
| A15R6 | 0757-0273 | | R:FXD MET FLM 3.01K OHM 1% 1/8W | 28480 | 0757-0273 |
| A15R7 | 0698-3497 | | R:FXD FLM 6.04K OHM 1% 1/8W | 28480 | 0698-3497 |
| A15R8 | 0757-0444 | 2 | R:FXD MET FLM 12.1K OHM 1% 1/8W | 28480 | 0757-0444 |
| A15R9 | 0757-0453 | | R:FXD MET FLM 30.1K OHM 1% 1/8W | 28480 | 0757-0453 |
| A15R10 | 0698-3572 | | R:FXD FLM 60.4K OHM 1% 1/8W | 28480 | 0698-3572 |
| A15R11 | 0757-0467 | | R:FXD MET FLM 121K OHM 1% 1/8W | 28480 | 0757-0467 |
| A15R12 | 0698-3499 | | R:FXD FLM 40.2K OHM 1% 1/8W | 28480 | 0698-3499 |
| A15R13 | 0698-3497 | | R:FXD FLM 6.04K OHM 1% 1/8W | 28480 | 0698-3497 |
| A15R14 | 0757-0442 | | R:FXD MET FLM 10.0K OHM 1% 1/8W | 28480 | 0757-0442 |
| A15R15 | 0757-0444 | | R:FXD MET FLM 12.1K OHM 1% 1/8W | 28480 | 0757-0444 |
| A15R16 | 0698-5572 | 2 | R:FXD FLM 12.5K OHM 0.5% 1/8W | 28480 | 0698-5572 |
| A15R17 | 0698-5572 | | R:FXD FLM 12.5K OHM 0.5% 1/8W | 28480 | 0698-5572 |
| A15R18 | 0757-0442 | | R:FXD MET FLM 10.0K OHM 1% 1/8W | 28480 | 0757-0442 |
| A15R19 | 2100-0668 | | R:VAR 10 K 10% | 12697 | 381 |
| A15R20 | 0698-3519 | | R:FXD MET FLM 12.4K OHM 1% 1/8W | 28480 | 0698-3519 |
| A15R21 | 0698-6758 | 1 | R:FXD FLM 12.5K OHM 0.5% 1/8W | 28480 | 0698-6758 |
| A15R22 | 0698-5580 | 1 | R:FXD FLM 25K OHM 0.5% 1/8W | 28480 | 0698-5580 |
| A15R23 | 0698-5573 | | R:FXD FLM 50K OHM 0.5% 1/8W | 28480 | 0698-5573 |
| A15R24 | 0698-6292 | 1 | R:FXD FLM 125K OHM 0.5% 1/8W | 28480 | 0698-6292 |
| A15R25 | 0698-5581 | 1 | R:FXD FLM 250K OHM 0.5% 1/8W | 28480 | 0698-5581 |
| A15R26 | 0757-0015 | 1 | R:FXD MET FLM 500K OHM 1/2% 1/2W | 28480 | 0757-0015 |
| A15R27 | 0698-5916 | 1 | R:FXD MET FLM 1.25 MEGOHM 1.0% 1/2W | 28480 | 0698-5916 |
| A15R28 | 0698-5987 | 1 | R:FXD MET FLM 2.5 MEGOHM 1.0% 1/2W | 28480 | 0698-5987 |
| A15R29 | 0698-3587 | 1 | R:FXD MET FLM 5.00 MEGOHM 1% 1W | 28480 | 0698-3587 |
| A15R30 | 0757-0486 | | R:FXD MET FLM 750K OHM 1% 1/8W | 28480 | 0757-0486 |
| A15R31 | 0698-4489 | | R:FXD FLM 28K OHM 1% 1/8W | 28480 | 0698-4489 |
| A15R32 | 0684-3351 | 1 | R:FXD 3.3 MEGOHM 10% | 01121 | CB 3351 |
| A15R41 | 0698-4524 | | R:FXD FLM 174K OHM 1% 1/8W | 28480 | 0698-4524 |
| A15R42 | 0698-3455 | | R:FXD MET FLM 261K OHM 1% 1/8W | 28480 | 0698-3455 |
| A15R43 | 0698-4500 | | R:FXD FLM 57.6K OHM 1% 1/8W | 28480 | 0698-4500 |
| A15R44 | 0698-4511 | | R:FXD FLM 86.6K OHM 1.0% 1/8W | 28480 | 0698-4511 |
| A15S1 | 03580-61903 | 1 | SWITCH ASSY:SPAN | 28480 | 03580-61903 |
| A15S1 | 3100-2742 | 1 | SWITCH:ROTARY | 28480 | 3100-2742 |
| A15S2 | 03580-61904 | 1 | SWITCH ASSY:MODE | 28480 | 03580-61904 |
| A15U1 | 1826-0043 | | IC:LINEAR OPERATIONAL AMPLIFIER | 28480 | 1826-0043 |
| A15U2 | 1826-0043 | | IC:LINEAR OPERATIONAL AMPLIFIER | 28480 | 1826-0043 |
| A16 | 03580-66516 | 1 | BOARD ASSY:FCM | 28480 | 03580-66516 |
| A16C1 | 0180-1743 | | C:FXD ELECT 0.1 UF 10% 35VDCW | 56289 | 150D104X9035A2-DYS |
| A16C2 | 0160-2207 | | C:FXD MICA 300 PF 5% | 28480 | 0160-2207 |
| A16C3 | 0150-0093 | | C:FXD CER 0.01 UF +80-20% 100VDCW | 72982 | 801-K800011 |
| A16C4 | 0180-0376 | | C:FXD ELECT 0.47 UF 10% 35VDCW | 56289 | 150D474X9035A2-DYS |
| A16C12 | 0150-0093 | | C:FXD CER 0.01 UF +80-20% 100VDCW | 72982 | 801-K800011 |
| A16CR1 | 1901-0040 | | DIODE:SILICON 50 MA 30 WV | 07263 | FDG1088 |
| A16CR2 | 1901-0040 | | DIODE:SILICON 50 MA 30 WV | 07263 | FDG1088 |
| A16CR3 | 1901-0040 | | DIODE:SILICON 50 MA 30 WV | 07263 | FDG1088 |
| A16CR4 | 1901-0040 | | DIODE:SILICON 50 MA 30 WV | 07263 | FDG1088 |
| A16CR6 | 1902-0025 | | DIODE,BREAKDOWN:10.0V 5% 400 MW | 28480 | 1902-0025 |
| A16CR7 | 1901-0040 | | DIODE:SILICON 50 MA 30 WV | 07263 | FDG1088 |
| A16CR8, CR9 | 1901-0040 | | DIODE:SILICON 50 MA 30 WV | 07263 | FDG1088 |
| A16J1, J2 | 1251-2035 | | CONN:PC EDGE (2 x 15) 30 CONTACT | 71785 | 252-15-30-300 |
| A16L1 | 9100-1644 | 1 | COIL/CHOKE 330 UH 5% | 28480 | 9100-1644 |
| A1601 | 1854-0354 | | TSTR:SI NPN | 28480 | 1854-0354 |
| A1602 | 1853-0010 | | TSTR:SI PNP(SELECTED FROM 2N3251) | 28480 | 1853-0010 |
| A1603 | 1854-0071 | | TSTR:SI NPN(SELECTED FROM 2N3704) | 28480 | 1854-0071 |
| A1604 | 1853-0010 | | TSTR:SI PNP(SELECTED FROM 2N3251) | 28480 | 1853-0010 |
| A1606 | 1854-0071 | | TSTR:SI NPN(SELECTED FROM 2N3704) | 28480 | 1854-0071 |
| A1607 | 1854-0475 | 1 | TSTR:SI NPN | 28480 | 1854-0475 |
| A1608 | 1855-0386 | | TSTR:FET N-CHANNEL | 80131 | 2N4392 |

| Reference Designation | HP Part Number | Qty | Description | Mfr Code | Mfr Part Number |
|---|---|---|---|---|---|
| A16R1 | 0757-0270 | 2 | R:FXD MET FLM 249K OHM 1% 1/8W | 28480 | 0757-0270 |
| A16R2 | 0757-0270 | | R:FXD MET FLM 249K OHM 1% 1/8W | 28480 | 0757-0270 |
| A16R3 | 0757-0426 | | R:FXD FLM 1.3K OHM 1% 1/8W | 28480 | 0757-0426 |
| A16R4 | 0698-4499 | 1 | R:FXD FLM 54.9K OHM 1% 1/8W | 28480 | 0698-4499 |
| A16R5 | 0698-3162 | 2 | R:FXD MET FLM 46.4K OHM 1% 1/8W | 28480 | 0698-3162 |
| A16R6 | 0698-4503 | | R:FXD FLM 66.5K OHM 1% 1/8W | 28480 | 0698-4503 |
| A16R7 | 0684-2231 | | R:FXD COMP 22K OHM 10% 1/4W | 01121 | CB 2231 |
| A16R8 | 0757-0282 | | R:FXD MET FLM 221 OHM 1% 1/8W | 28480 | 0757-0282 |
| A16R9 | 0684-1031 | | R:FXD COMP 10K OHM 10% 1/4W | 01121 | CB 1031 |
| A16R10 | 0698-3228 | | R:FXD MET FLM 49.9K OHM 1% 1/8W | 28480 | 0698-3228 |
| A16R11 | 0757-0456 | | R:FXD MET FLM 43.2K OHM 1% 1/8W | 28480 | 0757-0456 |
| A16R12 | 0698-3228 | | R:FXD MET FLM 49.9K OHM 1% 1/8W | 28480 | 0698-3228 |
| A16R13 | 0698-3228 | | R:FXD MET FLM 49.9K OHM 1% 1/8W | 28480 | 0698-3228 |
| A16R14 | 0684-1041 | | R:FXD COMP 100K OHM 10% 1/4W | 01121 | CB 1041 |
| A16R15 | 0684-2251 | | R:FXD COMP 2.2 MEGOHM 10% 1/4W | 01121 | CB 2251 |
| A16R16 | 0757-0440 | | R:FXD MET FLM 7.50K OHM 1% 1/8W | 28480 | 0757-0440 |
| A16R17 | 0757-0460 | | R:FXD MET FLM 61.9K OHM 1% 1/8W | 28480 | 0757-0460 |
| A16R18 | 0698-3557 | | R:FXD FLM 806 OHM 1% 1/8W | 28480 | 0698-3557 |
| A16R19 | 0698-3228 | | R:FXD MET FLM 49.9K OHM 1% 1/8W | 28480 | 0698-3228 |
| A16R22 | 0684-2231 | | R:FXD COMP 22K OHM 10% 1/4W | 01121 | CB 2231 |
| A16R24 | 0757-0479 | 1 | R:FXD MET FLM 392K OHM 1% 1/8W | 28480 | 0757-0479 |
| A16R25 | 0757-0273 | | R:FXD MET FLM 3.01K OHM 1% 1/8W | 28480 | 0757-0273 |
| A16R26 | 0698-3162 | | R:FXD MET FLM 46.4K OHM 1% 1/8W | 28480 | 0698-3162 |
| A16R27 | 0698-3228 | | R:FXD MET FLM 49.9K OHM 1% 1/8W | 28480 | 0698-3228 |
| A16R28 | 0757-0463 | 1 | R:FXD MET FLM 82.5K OHM 1% 1/8W | 28480 | 0757-0463 |
| A16R29 | 0698-3557 | | R:FXD FLM 806 OHM 1% 1/8W | 28480 | 0698-3557 |
| A16R30 | 0684-6831 | | R:FXD COMP 68K OHM 10% 1/4W | 01121 | CB 6831 |
| A16R31 | 0684-1041 | | R:FXD COMP 100K OHM 10% 1/4W | 01121 | CB 1041 |
| A16U1 | 1826-0043 | | IC:LINEAR OPERATIONAL AMPLIFIER | 28480 | 1826-0043 |
| A16U2 | 1826-0043 | | IC:LINEAR OPERATIONAL AMPLIFIER | 28480 | 1826-0043 |
| A16U3 | 1820-0223 | | INTEGRATED CIRCUIT:OPERATIONAL AMPL. | 28480 | 1820-0223 |
| A16U4 | 1826-0111 | 1 | IC | 04713 | MC1458C |
| A17 | | | NOT ASSIGNED | | |
| A18 Δ, | 03581-66518 | 1 | BOARD ASSY: INPUT, BALANCED (FOR OPTION 002 ONLY) | 28480 | 03580-66518 |
| A18C1 | 0180-0091 | 2 | C:FXD 10UF+50-10% 100VDC AL | 56289 | 30D106F100DC2 |
| A18C4 | 0180-0091 | | C:FXD 10UF +50-10% 100VDC AL | 56289 | 30D106F100DC2 |
| A18C5 | 0160-2206 | | C:FXD 160PF 5% 300VDCW | 28480 | 0160-2206 |
| A18C6 | 0140-0204 | 1 | C:FXD 47PF 5% 500VDCW | 72136 | DM15E470J0500WV1CR |
| A18J1 | 1251-2969 | | CONN:PHONO, SINGLE JACK | 27264 | 15-24-0501 |
| A18J2 | 1251-3638 | 1 | CONN:POST TYPE | 27264 | 09-65-1061 |
| A18R1 | 0698-4882 | 1 | R:FXD 976 OHM 1% .5 W F TUBULAR | 24546 | NA6 -F |
| A18R2 | 0698-5874 | 1 | R:FXD 639 OHM 1% .5W F TUBULAR | 24546 | NA6 R-F |
| A18R3* | 0757-0284 | 1 | R:FXD 150 OHM 1% .125W F TUBULAR FACTORY SELECTED PART | 24546 | C4-1/8-TO-151-F |
| A18R4 | 0757-0472 | 1 | R:FXD 200K 1% .125W F TUBULAR | 24546 | C4-1/8-TO-2003-F |
| A18R5 | 0698-4308 | | R:FXD 16.9K 1% .125W F TUBULAR | 16299 | C4-1/8-TO-1692-F |
| A18T1 | 9100-1460 | 1 | TRANSFORMER AUDIO | 28480 | 9100-1460 |
| A19 | | | NOT ASSIGNED | | |
| A20 | 0960-0444 | 1 | POWER INPUT MODULE | 28480 | 0960-0444 |

Δ, See Backdating

**Page 6-34.** Delete the parts list for the A33 board.

**Pages 6-35, 6-36** should be as follows:

| Reference Designation | HP Part Number | Qty | Description | Mfr Code | Mfr Part Number |
|---|---|---|---|---|---|
| | | | MISCELLANEOUS MECHANICAL PARTS (CONT'D) | | |
| | 03580-04104 | 2 | COVER:SIDE RAIL | 28480 | 03580-04104 |
| | 5040-7042 | 4 | CAP:END (FOR HANDLE) | 28480 | 5040-7042 |
| | 03580-24706 | 4 | RETAINER (FOR HANDLE) | 28480 | 03580-24706 |
| | 03580-26001 | 4 | SCREW (FOR HANDLE) | 28480 | 03580-26001 |
| | 3050-0456 | 4 | WASHER (FOR HANDLE) | 86928 | 5808-16-15 |
| | 5040-0508 | 1 | LIGHT SHIELD:CRT (PLASTIC) | 28480 | 5040-0508 |
| | 03580-00203 | 1 | PANEL:FREQUENCY CONTROL MODULE | 28480 | 03580-00203 |
| | | | PANEL:FRONT | | |
| | 03580-00211 Δ | 1 | STANDARD 3580A | 28480 | 03580-00201 |
| | 03580-00214 Δ | 1 | OPTION 002 | 28480 | 03580-00204 |
| | | | PANEL:REAR | | |
| | 03580-00212 | 1 | STANDARD 3580A | 28480 | 03580-00202 |
| | 03580-00205 | 1 | OPTION 002 | 28480 | 03580-00205 |
| | 1460-1341 | 1 | STAND:TILT | 28480 | 1460-1341 |
| | 5060-7440 | 1 | WINDOW:FREQUENCY | 28480 | 5060-7440 |
| | | | KNOBS | | |
| | 0370-1005 | | ADAPTIVE SWEEP | 28480 | 0370-1005 |
| | 0370-2182 | | AMPLITUDE REF LEVEL | 28480 | 0370-2182 |
| | 0370-2186 | | BANDWIDTH | 28480 | 0370-2186 |
| | 0370-2188 | | DISPLAY SMOOTHING | 28480 | 0370-2188 |
| | 0370-1005 | | FOCUS | 28480 | 0370-1005 |
| | 0370-1115 | | FREQUENCY (CRANK) | 28480 | 0370-1115 |
| | 0370-2185 | | FREQUENCY SPAN | 28480 | 0370-2185 |
| | 03580-67401 | | INPUT SENSITIVITY | 28480 | 03580-67401 |
| | 7120-4008 | | DECAL | 28480 | 7120-3115 |
| | 0370-1005 | | INTENSITY | 28480 | 0370-1005 |
| | 0370-2188 | | MANUAL VERNIER | 28480 | 0370-2188 |
| | 0370-2473 | | POWER | 28480 | 0370-2473 |
| | 0370-2187 | | SWEEP MODE | 28480 | 0370-2187 |
| | 0370-2184 | | SWEEP TIME | 28480 | 0370-2184 |
| | 0370-2188 | | CONCENTRIC KNOB | 28480 | 0370-2188 |
| | 0370-2189 | | VERNIER | 28480 | 0370-2189 |
| | 0370-1019 | | ZERO CAL | 28480 | 0370-1019 |
| | 0370-0906 | 6 | PUSHBUTTON-BASE | 28480 | 0370-0906 |
| | 0370-0934 | 6 | PUSHBUTTON-CAP | 28480 | 0370-0934 |
| | 0370-0914 | 6 | PUSHBUTTON-BEZEL | 28480 | 0370-0914 |
| | 0350-0137 | 1 | LABEL:PUSHBUTTON, 1 DB | 28480 | 0350-0137 |
| | 0350-0136 | 1 | LABEL:PUSHBUTTON, 10 DB | 28480 | 0350-0136 |
| | 0350-0135 | 1 | LABEL:PUSHBUTTON, LIN | 28480 | 0350-0135 |
| | 0350-0138 | 3 | LABEL:PUSHBUTTON, PLAIN | 28480 | 0350-0138 |
| | | | MECHANICAL PARTS (SEE FIGURE 6-1) | | |
| MP1 | 1140-0059 | 1 | COUNTER:MECH | 28480 | 1140-0059 |
| MP2 | 03580-24302 | 1 | PLATE:COUNTER | 28480 | 03580-24302 |
| MP3 | 03580-24303 | 1 | PLATE:POT | 28480 | 03580-24303 |
| MP4 | 1430-0777 | 1 | GEAR:SPUR | 28480 | 1430-0777 |
| MP5 | 03580-24304 | 1 | PLATE:REAR | 28480 | 03580-24304 |
| MP6 | 03580-20801 | 1 | HSG:DETENT | 28480 | 03580-20801 |
| MP7 | 1430-0778 | 1 | GEAR:SPUR | 28480 | 1430-0778 |
| MP8 | 1430-0775 | 1 | GEAR:SPUR | 28480 | 1430-0775 |
| MP9 | 03580-24704 | 4 | HSG:SPACER | 28480 | 03580-24704 |
| MP10 | 1460-0563 | 1 | SPRING:CLUTCH | 28480 | 1460-0563 |
| MP11 | 03580-24705 | 2 | SPACER:RATIO DRIVE | 28480 | 03580-24705 |
| MP12 | 03580-23704 | 1 | SHAFT:COUNTER | 28480 | 03580-23704 |
| MP13 | 03580-21401 | 2 | RATIO DRIVE | 28480 | 03580-21401 |
| MP14 | 03580-21204 | 1 | ADAPTER:CLUTCH | 28480 | 03580-21204 |
| MP15 | 3050-0587 | 1 | WASH:NEOPRENE | 28480 | 3050-0587 |
| MP16 | 03580-23703 | 1 | SHAFT:RATIO DRIVE | 28480 | 03580-23703 |
| MP17 | 1430-0713 | 1 | GEAR:MITER | 28480 | 1430-0713 |
| MP18 | 03580-22402 | 1 | GEAR:BEVEL, MOD | 28480 | 03580-22402 |
| MP19 | 03580-24301 | 1 | PLATE:FRONT (THIS INCLUDES SWITCH, 3101-0199) | 28480 | 03580-24301 |
| MP20 | 03580-24702 | 3 | SPACER:HSG | 28480 | 03580-24702 |
| MP21 | 03580-01216 | 1 | PLATE:CLUTCH | 28480 | 03580-01216 |
| MP22 | 5040-7532 | 1 | CLUTCH | 28480 | 5040-7532 |
| MP23 | 03580-24703 | 2 | SPACER:HSG | 28480 | 03580-24703 |
| MP24 | 03580-62401 | 1 | GEAR:ANTI-BACKLASH | 28480 | 03580-62401 |
| MP25 | 03580-22401 | 1 | GEAR:STOP-MOD | 28480 | 03580-22401 |
| MP26 | 00692-247 | 1 | GEAR:STOP | 28480 | 00692-247 |
| MP27 | 03580-23705 | 1 | SHAFT:LIMIT | 28480 | 03580-23705 |
| R6 | 2100-0564 | 1 | R:VAR, 100 K 20° | 28480 | 2100-0564 |
| R7 | 2100-0574 | 1 | R:VAR 10 TURN 5 K - 10% | 28480 | 2100-0574 |
| S7 | 3101-0199 | 1 | SWITCH SLIDE | 28480 | 3101-0199 |

Δ For S/N 1312A-00365 and below: order 03580-00201 (Std) or 03580-00204 (Opt. 002).

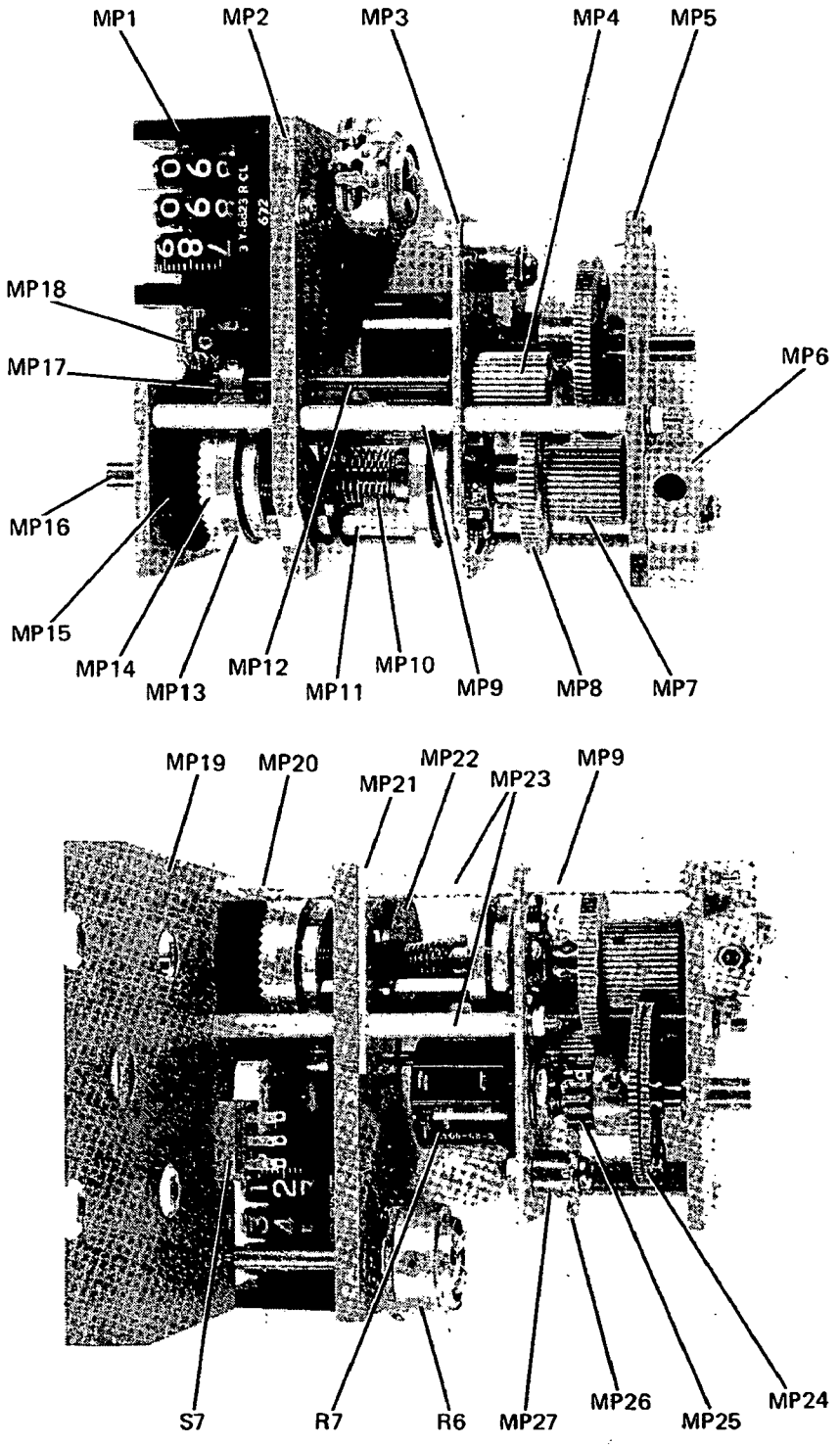


**Figure 6-1. Frequency Control Component Locator.**

Page 7-11/7-12 should appear as follows:

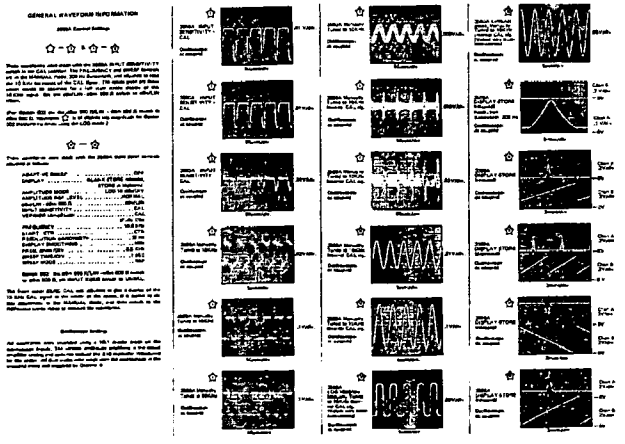

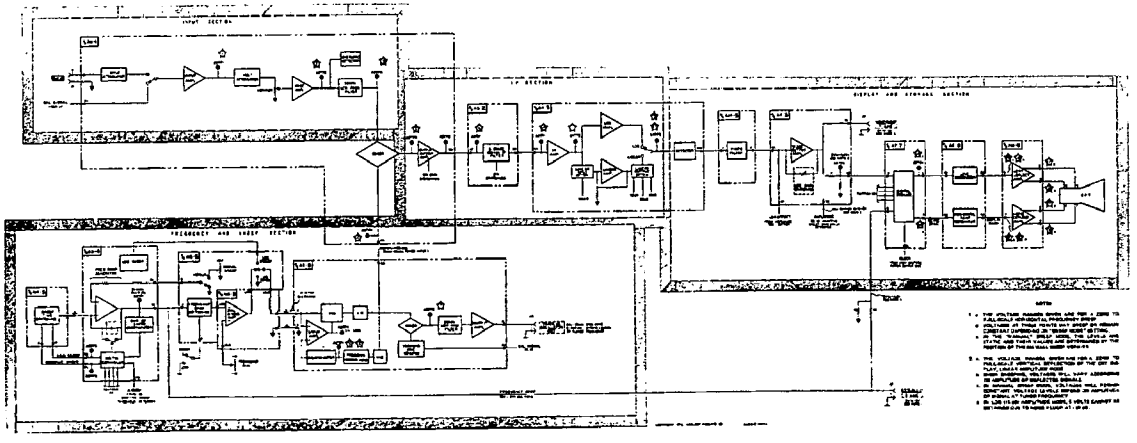

Figure 7-2. Functional Block Diagram

Page 7-13/7-14 should appear as follows:

Table 1. Input Circuit Amplitude Levels and Gains for Full Scale Sine Wave Inputs (Amplitude Ref Level – Normal). Note: All voltages in RMS.

| | | | | | | | | | | | |
|---|---|---|---|---|---|---|---|---|---|---|---|
| [illegible] | [illegible] | [illegible] | [illegible] | [illegible] | [illegible] | [illegible] | [illegible] | [illegible] | [illegible] | [illegible] | [illegible] |
| [illegible] | [illegible] | [illegible] | [illegible] | [illegible] | [illegible] | [illegible] | [illegible] | [illegible] | [illegible] | [illegible] | [illegible] |
| [illegible] | [illegible] | [illegible] | [illegible] | [illegible] | [illegible] | [illegible] | [illegible] | [illegible] | [illegible] | [illegible] | [illegible] |
| [illegible] | [illegible] | [illegible] | [illegible] | [illegible] | [illegible] | [illegible] | [illegible] | [illegible] | [illegible] | [illegible] | [illegible] |
| [illegible] | [illegible] | [illegible] | [illegible] | [illegible] | [illegible] | [illegible] | [illegible] | [illegible] | [illegible] | [illegible] | [illegible] |
| [illegible] | [illegible] | [illegible] | [illegible] | [illegible] | [illegible] | [illegible] | [illegible] | [illegible] | [illegible] | [illegible] | [illegible] |
| [illegible] | [illegible] | [illegible] | [illegible] | [illegible] | [illegible] | [illegible] | [illegible] | [illegible] | [illegible] | [illegible] | [illegible] |
| [illegible] | [illegible] | [illegible] | [illegible] | [illegible] | [illegible] | [illegible] | [illegible] | [illegible] | [illegible] | [illegible] | [illegible] |

Table 2. Approximate IF Level Changes with Bandwidth (Full Scale Sine Wave Input, LOG Mode, Manually Tuned to Input Frequency)

| Bandwidth | I.F. Input A5TP5, A5TP1 | I.F. Output A4 pin 88, A4TP1 |
|---|---|---|
| 300 Hz | 640 mV p-p | 430 mV p-p |
| 100 Hz | 640 mV p-p | 420 mV p-p |
| 30 Hz | 320 mV p-p | 150 mV p-p |
| 10 Hz | 325 mV p-p | 140 mV p-p |
| 3 Hz | 110 mV p-p | 80 mV p-p |
| 1 Hz | 110 mV p-p | 80 mV p-p |

| Full Scale Input | MAX INPUT (INPUT SENSITIVITY Switch) | AMPLITUDE REF LEVEL | A4TP2 | Input Attenuation | Input Amp Gain | A4U6 pin 6 | Output Attenuation | A4 pin T, A6 pin 2 (LIN GAIN) | Output Amp Gain | A4TP3 (Approx. Value) |
|---|---|---|---|---|---|---|---|---|---|---|
| 1 V rms | 1 V | x1 | 8.7 V p-p | -40 dB | +40 dB | 8.7 V p-p | 40 dB | .28 V dc | +34 dB (X50) | 2.4 V p-p |
| .3 V rms | 1 V | x.3 | 1.22 V p-p | -40 dB | +40 dB | 1.22 V p-p | 30 dB | +4.3 V dc | +38.2 dB (X81) | 2.4 V p-p |
| .1 V rms | 1 V | x.1 | .87 V p-p | -40 dB | +40 dB | .87 V p-p | 20 dB | .28 V dc | +34 dB (X50) | 2.4 V p-p |
| .03 V rms | 1 V | x.03 | .122 V p-p | -40 dB | +40 dB | .122 V p-p | 10 dB | +4.3 V dc | +38.2 dB (X81) | 2.4 V p-p |
| .01 V rms | 1 V | x.01 | .087 V p-p | 0 dB | +40 dB | 8.7 V p-p | 40 dB | .28 V dc | +34 dB (X50) | 2.4 V p-p |
| 3 mV p-p | 1 V | x.003 | | 0 dB | +40 dB | 1.22 V p-p | 30 dB | +4.3 V dc | +38.2 dB (X81) | 2.4 V p-p |
| 1 mV p-p | 1 V | x.001 | | 0 dB | +40 dB | .87 V p-p | 20 dB | .28 V dc | +34 dB (X50) | 2.4 V p-p |
| .3 mV p-p | 1 V | x.0003 | | 0 dB | +40 dB | .122 V p-p | 10 dB | +4.3 V dc | +38.2 dB (X81) | 2.4 V p-p |

Table 3. Approximate Full Scale Levels in Linear Amplifier (LINEAR Mode, Full Scale Input, Manually Tuned to Input Frequency).

Table 4. Linear and Log Offsets.

| AMPLITUDE MODE | AMPLITUDE REF LEVEL | A4 pin 87 |
|---|---|---|
| LOG | 0 | -2.50 V dc |
| LOG | -10 | -2.25 V dc |
| LOG | -20 | -2.00 V dc |
| LOG | -30 | -1.75 V dc |
| LOG | -40 | -1.50 V dc |
| LOG | -50 | -1.25 V dc |
| LOG | -60 | -1.00 V dc |
| LOG | -70 | -0.75 V dc |
| LINEAR | Any Setting | -2.50 V dc |

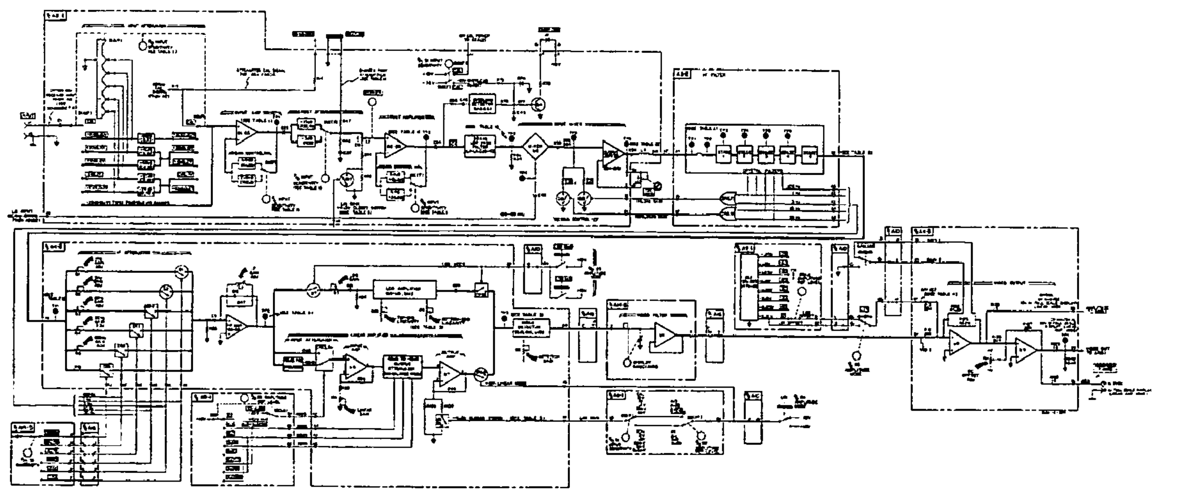

Page 7-13/7-14, Figure 7-8 should appear as follows:

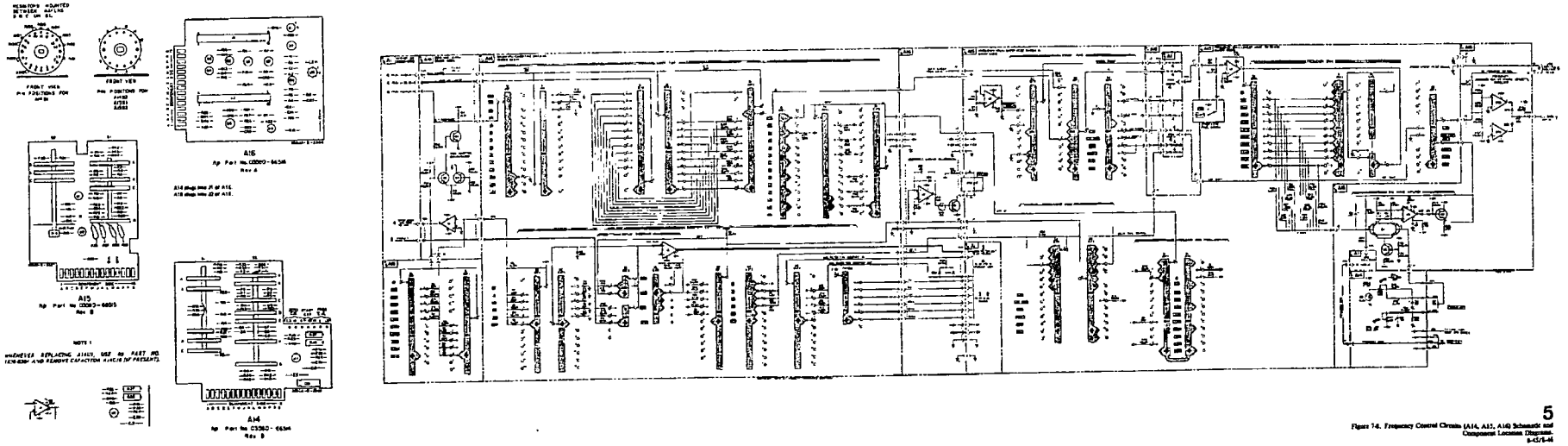

Figure 7-8. Frequency Control Circuits (A14, A15, A16) Schematic and Component Location Diagrams.