User's Reference

Publication number 54720-97005
First edition, October 1995

This book applies directly to firmware revision 4.XX.

For Safety information, Warranties, and Regulatory information, see the pages behind the index

HP 54710A, 54710D, 54720A and 54720D Oscilloscopes

Specifications

The following are specifications used to test the HP 54700-Series mainframes. Specifications are valid after a 20 minute warm-up period.

Time base

Time-Interval Measurement Accuracy [1]

Real Time ±[(0.2)(sample interval) + 0.007% of delta-time marker reading].

Equivalent Time (16 averages) ±(30 ps + 0.007% of delta time marker reading)

Front Panel Calibrator

dc Output

Adjustable output range –2.5 V to +2.5 V when terminated into 50 Ω.

Output Delta Voltage Accuracy ±(0.2% of delta voltage output)

1) Time interval measurement accuracy includes error sources such as time base inaccuracy, aperture uncertainty/sample clock phase jitter, reconstruction filter uncertainty (real-time only), trigger interpolation jitter, and channel-to-channel skew. Real-time time-interval accuracy applies for input rise times greater than 1.4 multiplied by the sample interval.

Characteristics

The following characteristics are typical for the HP 54700-Series mainframes.

Channel

ADC Input Sources (simultaneous acquisition)

HP 54720A/D mainframe 4, each plug-in slot has its own 2 GSa/s ADC with 16,384 point acquisition memory for the HP 54720A and 65,536 points for the HP 54720D.

HP 54710A/D mainframe 2, each plug-in slot has its own 2 GSa/s ADC with 16,384 point acquisition memory for the HP 54710A and 65,536 points for the HP 54710D.

Best Accuracy Calibration Performing the Best Accuracy Cal on a channel just prior to a series of critical measurements will ensure the most accurate results. This calibration adjusts the channel's gain, offset, and linearity and requires a specific plug-in to stay installed in a specific mainframe slot.

Channel Skew Adjustment The time skew between channels can be manually eliminated all the way to the probe tip to 1-ps resolution.

Probe Calibration A probe calibration routine automatically computes the offset and the attenuation created by the probe attached to the channel input.

Time base

Time Base Scale 100 ps/div to 20 s/div (in 1-2-5 or fine steps)

Time Base Position Range (auto sample rate and record length)

Pretrigger 0 to –1 s or one full screen width, whichever is larger.

Posttrigger 0 to 1 s or one full screen width, whichever is larger.

Time Interval Measurement and Trigger Interpolator Resolution
1 ps

Time Base Window

Scale: 1 ps/div to the main time base scale factor.

Position: The window must always stay in the time window defined by the main sweep.

Trigger

Sources All four input plug-in slots can be used for triggering. See plug-in specifications for more details.

Edge Slope Positive/negative

Holdoff Range 60 ns to 320 ms

Pattern Trigger A pattern can be specified using any channel or external trigger input (up to four bits wide). Each of the inputs can be specified as high, low, or don't care with respect to the trigger level setting for that source. Trigger occurs when that pattern is entered or exited.

Glitch Trigger This mode makes it easy to look for glitches on a single source. The user can distinguish glitches down to 3 ns ±1 ns in width and can capture glitches as narrow as 500 ps in width, depending on the plug-in.

Time-Qualified Pattern Trigger A trigger will occur on the first edge to exit a pattern only if it meets one of these criteria: pattern present <[time], pattern present >[time], pattern present in range >[time1] and <[time2]. The time settings are adjustable from 20 ns to 160 ms [±(3% + 2 ns)] with 10 ns resolution. Filter recovery time is ≤12 ns.

State Trigger A pattern is specified on any three of the four inputs, with the fourth input used as a clock. Trigger occurs on the rising or falling edge of the input specified as the clock, and when the pattern is present or is not present. Setup time for the pattern with respect to the clock is 10 ns or less; hold time is zero.

Event-Delayed Trigger The trigger is qualified by an edge. The delay can be spec- ified as a number of occurrences of a rising or falling edge of any input. After the delay, an occurrence of a rising or falling edge of any input will generate the trigger. The trigger occurrence value is selectable from 1 to 16,000,000. The maximum edge counting rate is 70 MHz. Edges occurring <30 ns after the qualifying edge may not be detected.

Time-Delayed Trigger The trigger is qualified by an edge. The delay is selectable from 30 ns to 160 ms. After the delay, an occurrence of a rising or falling edge on any one selected input will generate the trigger.

Standard and User Defined TV Trigger You can trigger on 525 lines/60 Hz, 625 lines/50 Hz, and 875 lines/60 Hz standard TV systems, or you can use the user defined menu to customize the TV triggering.

Fast Fourier Transforms (FFT)

Frequency Specifications (HP 54710A/20A in Real Time Mode)

Plug-in	Bandwidth (-3 dB)	Maximum Sample Rate	Record Length	Maximum Freq Span	Max Resolution at Max Frequency
54711A	>1.5 GHz [1]	2 GSa/s	16-16,384 [2]	1 GHz	122 kHz [3]
54712A	>1.1 GHz	2 GSa/s	16-16,384 [2]	1 GHz	122 kHz [3]
54713A	>500 MHz	2 GSa/s	16-16,384 [2]	1 GHz	122 kHz [3]
54714A	>500 MHz	2 GSa/s	16-8,192 [2]	1 GHz	244 kHz [3]
54721A	>1.1 GHz	4 GSa/s	16-32,768	2 GHz	122 kHz
54722A	>1.5 GHz [1]	8 GSa/s	16-32,768	4 GHz	244 kHz

1. 2.0 GHz in the HP 54710D and 54720D mainframes
2. 16-32,768 in the HP 54710D and 54720D mainframes
3. 61 kHz in the HP 54710D and 54720D mainframes

Span sample rate / 2

Resolution sample rate / record length

Frequency Accuracy ±[(0.5 × resolution)+(0.00007 × signal frequency)]

Magnitude Specifications

Magnitude Accuracy (Flattop window) 0.26 dB (3%) Near dc, –3 dB at maximum bandwidth

Signal-to-noise Ratio 55 to 65 dB (typical).

Controls

Span Sets the maximum frequency

Resolution Sets the spacing between points in the frequency domain

Magnify Controls For zooming in on a portion of the frequency record up to an expansion factor of 200. The magnify controls are: magnify on/off, magnify span, and center frequency.

Vertical Scaling The vertical scale is adjustable in dBm, a logarithmic scale. You can adjust sensitivity and offset.

Window There are three windows for reducing leakage and enhancing certain characteristics in the frequency domain.

Rectangular (window off) Use for transients and signals where there are an integral number of cycles in the time record.

Hanning Use for frequency accuracy and general purpose use.

Flattop Use for amplitude accuracy.

Window Characteristics The window characteristics are shown below.

Window	Highest Side Lobe (dB)	3 dB Bandwidth (bins)	6 dB Bandwidth (bins)	Scallop Loss (dB)
Rectangular	–13	0.89	1.21	3.92
Hanning	–32	1.44	2.00	1.42
Flattop	–70	3.38	4.17	0.005

Highest Side Lobe The minimum attenuation in the stop band. It indicates the level of leakage present in the filter; that is, how high the skirts are in relation to the main peak.

3 dB bandwidth The width of the peak at a level 3 dB down. A narrow 3 dB bandwidth helps in separating frequency peaks that are close together.

6 dB Bandwidth The width of the peak at a level 6 dB down.

Bins The distance between frequency points. One bin equals the resolution.

Scallop Loss The attenuation of the peak half way between bins. The scallop loss determines the amplitude accuracy of a window. It measures the attenuation of a signal that falls between frequency bins versus one that is exactly on a frequency bin.

FFT Measurements

FFT Freq	Frequency of a peak	TMin	Frequency at minimum point
FFT Mag	Magnitude of a peak	VMax	Maximum amplitude
FFT ΔFreq	Δ Magnitude between peaks	VMin	Minimum amplitude
FFT ΔMag	ΔFrequency between peaks	Vp-p	Δ Magnitude, Max–Min
TMax	Frequency at maximum point	Vtim	Magnitude at a frequency (HP-IB only)

FFT Update Time

Points	Update Time	Points	Update Time
64	10 ms	2048	140 ms
128	15 ms	4096	290 ms
256	20 ms	8192	600 ms
512	35 ms	16384	1.25 s
1024	70 ms	32768	2.60 s

The update time includes acquisition, window calculation, FFT calculation, and the display of the FFT. The conditions are: 125 MHz span, real time, triggered mode, channels off, measurements and markers off, other functions off, and interpolation off.

Display Update

Maximum Display Update Rate: 550 Kpixels/s

HP-IB Transfer

Maximum HP-IB Transfer Rate: 500 Kbytes/s

Throughput

This throughput data was taken in the real-time sampling mode (250 MSa/s) with 512-point records onscreen, no measurements (waveforms/s only), no interpolation, fast draw mode, infinite persistence, markers off, math off, and one channel acquisition. Vp-p does not require threshold detection, but period does.

Throughput	Waveforms/second	Measurements/second	
Measurement		Vp-p	Period
Front-Panel Capture and Transfer Rate	>170	>44	>39
HP-IB Capture and Transfer Rate	>50	>33	>31

Front Panel Calibrator

ac Output A 2 kHz or 500 kHz square wave with approximately 1.6 ns transitions can be used for probe compensation and system calibration. The waveform levels are 0 V and 1 V when terminated into 50 Ω.

Product Support

Calibration

All instrument calibration is executed with built-in calibration routines. The mainframe calibration and plug-in calibration should be performed yearly. These calibrations are valid only if performed between 15°C and 35°C. Specifications are valid ±5°C from the calibration temperature. Perform probe calibration and best-accuracy calibration to assure the highest level of performance at the time of measurement.

Low Cost of Ownership

The HP 54700-Series, including plug-ins and probes, include a one year, return to HP warranty. To minimize the mean time to repair and the calibration time, the series was designed with no periodic hardware adjustments. HP's board exchange program assures economical and timely repair of units, reducing the cost-of-ownership.

Reliability

Under normal use, estimated mean time between failures (MTBF) for the HP 54710A/D is 10,000 hours. The estimated MTBF of the HP 54720A/D is 9,000 hours.

General Characteristics

These general characteristics apply to the HP 54700-Series mainframes.

Environmental Conditions

The instruments meet Hewlett-Packard's environmental specifications (section 750) for class B-1 products with exceptions as described for temperature and condensation. Contact your local HP field engineer for complete details.

Temperature

Operating 10°C to +40°C (50°F to +104°F)

Non-operating –40°C to +70°C (–40°F to +158°F)

Humidity

Operating up to 95% relative humidity (non-condensing) at +40°C (+104°F)

Non-operating up to 90% relative humidity at +65°C (+149°F)

Altitude

Operating up to 4,600 meters (15,000 ft)

Non-operating up to 15,300 meters (50,000 ft).

Vibration

Operating Random vibration 5-500 Hz, 10 minutes per axis, 0.3 g_{rms}

Non-operating Random vibration 5-500 Hz, 10 minute per axis, 2.41 g_{rms}; Resonant search, 5 to 500 Hz swept sine, 1 Octave/minute sweep rate, 0.75g, 5 minute resonant dwell at 4 resonances per axis.

Power Requirements

Voltage 90 to 132 or 198 to 264 Vac, 48-66 Hz.

Power 1200 VA; 650 W

Weight (approximate)

	HP 54710A/D	HP 54720A/D
Net	24.5 kg (54 lb)	26.4 kg (58 lb)
Shipping	31.8 kg (70 lb)	33.6 kg (74 lb)

Dimensions

Refer to the outline drawings to the right.

Notes

1. Dimensions are for general information only. If dimensions are required for building special enclosures, contact your HP field engineer.
2. Dimensions are in millimeters and (inches).

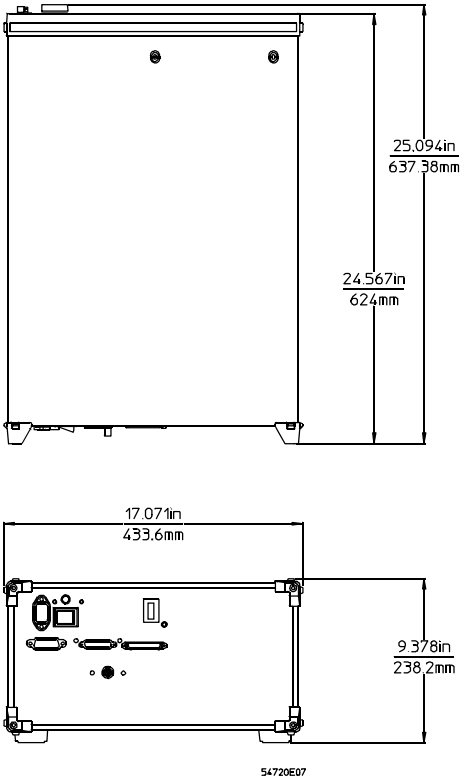

Product Regulations

Safety

IEC 348
UL 1244
CSA Standard C22.2 No.231 (Series M-89)

EMC

This product meets the requirement of the European Communities (EC) EMC Directive 89/336/EEC.

Emissions

EN55011/CISPR 11 (ISM, Group 1, Class A equipment)
SABS RAA Act No. 24 (1990)

Immunity

EN50082-1	Code[1]	Notes[2]
IEC 801-2 (ESD) 4kV CD, 8kV AD	1	
IEC 801-3 (Rad.) 3 V/m	2	
IEC 801-4 (EFT) 1kV	1	

[1] Performance Codes:
1 PASS - Normal operation, no effect.
2 PASS - Temporary degradation, self recoverable.
3 PASS - Temporary degradation, operator intervention required.
4 FAIL - Not recoverable, component damage.

[2] Notes:
(None)