User's Guide

Amplifier Test Application

(For the Agilent 86140-Series Optical Spectrum Analyzer)

Agilent Technologies

Agilent Part No. 86140-90051
Printed in USA
August 2000

Agilent Technologies
Lightwave Division
1400 Fountaingrove Parkway
Santa Rosa, CA 95403-1799, USA.

Notice.
The information contained in this document is subject to change without notice. Companies, names, and data used in examples herein are fictitious unless otherwise noted. Agilent Technologies makes no warranty of any kind with regard to this material, including but not limited to, the implied warranties of merchantability and fitness for a particular purpose. Agilent Technologies shall not be liable for errors contained herein or for incidental or consequential damages in connection with the furnishing, performance, or use of this material.

Restricted Rights Legend.
Use, duplication, or disclosure by the U.S. Government is subject to restrictions as set forth in subparagraph (c) (1) (ii) of the Rights in Technical Data and Computer Software clause at DFARS 252.227-7013 for DOD agencies, and subparagraphs (c) (1) and (c) (2) of the Commercial Computer Software Restricted Rights clause at FAR 52.227-19 for other agencies.

Safety Symbols.

CAUTION

The *caution* sign denotes a hazard. It calls attention to a procedure which, if not correctly performed or adhered to, could result in damage to or destruction of the product. Do not proceed beyond a caution sign until the indicated conditions are fully understood and met.

WARNING

The *warning* sign denotes a hazard. It calls attention to a procedure which, if not correctly performed or adhered to, could result in injury or loss of life. Do not proceed beyond a warning sign until the indicated conditions are fully understood and met.

⚠ The instruction manual symbol. The product is marked with this warning symbol when it is necessary for the user to refer to the instructions in the manual.

The laser radiation symbol. This warning symbol is marked on products which have a laser output.

∿ The AC symbol is used to indicate the required nature of the line module input power.

| The ON symbols are used to mark the positions of the instrument power line switch.

❍ The OFF symbols are used to mark the positions of the instrument power line switch.

CE The CE mark is a registered trademark of the European Community.

The CSA mark is a registered trademark of the Canadian Standards Association.

The C-Tick mark is a registered trademark of the Australian Spectrum Management Agency.

ISM1-A This text denotes the instrument is an Industrial Scientific and Medical Group 1 Class A product.

Software License
The following License Terms govern your use of the accompanying Software unless you have a separate signed agreement with Agilent Technologies.

License Grant. Agilent grants you a license to Use one copy of the Software. “Use” means storing, loading, installing, executing or displaying the Software. You may not modify the Software or disable any licensing or control features of the Software. If the Software is licensed for “concurrent use,” you may not allow more than the maximum number of authorized users to Use the Software concurrently.

Ownership. The Software is owned and copyrighted by Agilent or its third party suppliers. Your license confers no title to, or ownership in, the Software and is not a sale of any rights in the Software. Agilent 's third party suppliers may protect their rights in the event of any violation of these License Terms.

Copies and Adaptations. You may only make copies or adaptations of the Software for archival purposes or when copying or adaptation is an essential step in the authorized Use of the Software. You must reproduce all copyright notices in the original Software on all copies or adaptations. You may not copy the Software onto any public network.

No Disassembly or Decryption. You may not disassemble or decompile the Software unless Agilent 's prior written consent is obtained. In some jurisdictions, Agilent 's consent may not be required for limited disassembly or decompilation. Upon request, you will provide Agilent with reasonably detailed information regarding any disassembly or decompilation. You may not decrypt the Software unless decryption is a necessary part of the operation of the Software.

Transfer. Your license will automatically terminate upon any transfer of the Software. Upon transfer, you must deliver the Software, including any copies and related documentation, to the transferee. The transferee must accept these License Terms as a condition of the transfer.

Termination. Agilent may terminate your license upon notice for failure to comply with any of these License Terms. Upon termination, you must immediately destroy the Software, together with all copies, adaptations and merged portions in any form.

Export Requirements. You may not export or re-export the Software or any copies or adaptation in violation of any applicable laws or regulations.

U.S. Government Restricted Rights. The Software and Documentation have been developed entirely at private expense. They are delivered and licensed as “commercial computer software” as defined in DFARS 252.227-7013 (Oct 1988), DFARS 252.211-7015 (May 1991) or DFARS 252.227-7014 (Jun 1995), as a “commercial item” as defined in FAR 2.101(a), or as “Restricted computer software” as defined in FAR 52.227-19 (Jun 1987) (or any equivalent agency regulation or contract clause), whichever is applicable. You have those rights provided for such Software and Documentation by the applicable FAR or DFARS clause or the Agilent standard software agreement for the product involved.

Limited Software Warranty
Software. Agilent Technologies warrants for a period of one year from the date of purchase that the software product will execute its programming instructions when properly installed on the instrument indicated on this package. Agilent Technologies does not warrant that the operation of the software will be uninterrupted or error free. In the event that this software product fails to execute its programming instructions during the warranty period, Customer's remedy shall be to return the media to Agilent Technologies for replacement. Should Agilent Technologies be unable to replace the media within a reasonable amount of time, Customer's alternate remedy shall be a refund of the purchase price upon return of the product and all copies.

Media. Agilent Technologies warrants the media upon which this product is recorded to be free from defects in materials and workmanship under normal use for a period of one year from the date of purchase. In the event any media prove to be defective during the warranty period, Customer's remedy shall be to return the media to Agilent Technologies for replacement. Should Agilent Technologies be unable to replace the media within a reasonable amount of time, Customer's alternate remedy shall be a refund of the purchase price upon return of the product and all copies.

Notice of Warranty Claims. Customer must notify Agilent Technologies in writing of any warranty claim not later than thirty (30) days after the expiration of the warranty period.

Limitation of Warranty. Agilent Technologies makes no other express warranty, whether written or oral, with respect to this product. Any implied warranty of merchantability or fitness is limited to the one year duration of this written warranty.

This warranty gives specific legal rights, and Customer may also have other rights which vary from state to state, or province to province.

Exclusive Remedies. The remedies provided above are Customer's sole and exclusive remedies. In no event shall Agilent Technologies be liable for any direct, indirect, special, incidental, or consequential damages (including lost profit) whether based on warranty, contract, tort, or any other legal theory.

Warranty Service. Warranty service may be obtained from the nearest Agilent Technologies sales office or other location indicated in the owner's manual or service booklet.

Contents

1

Using the Application

About the Application

The amplifier test application for the 86140-series optical spectrum analyzers allows quick, accurate characterization of optical amplifiers with a minimum of user inputs. All specifications and characteristics are derived from the 86140-series specifications.

The application measures the channel wavelengths, source power, gain, and noise figure of an amplifier using Interpolation Source Subtraction (ISS) techniques.

The ISS method is composed of one set of sweeps to measure source signal wavelength, power, and spontaneous emission, and a second set of sweeps to measure the amplifier signal power and amplified spontaneous emission. These measured parameters are used to calculate the gain and noise figure for the amplifier.

The application calculates the following data and displays the results in the display table:

- Channel wavelength
- Source Power
- Gain
- Noise figure
- Source mean wavelength
- Sum of source signal power
- Amplifier mean wavelength
- Sum of amplifier signal power

The Amplifier Test Application Menus

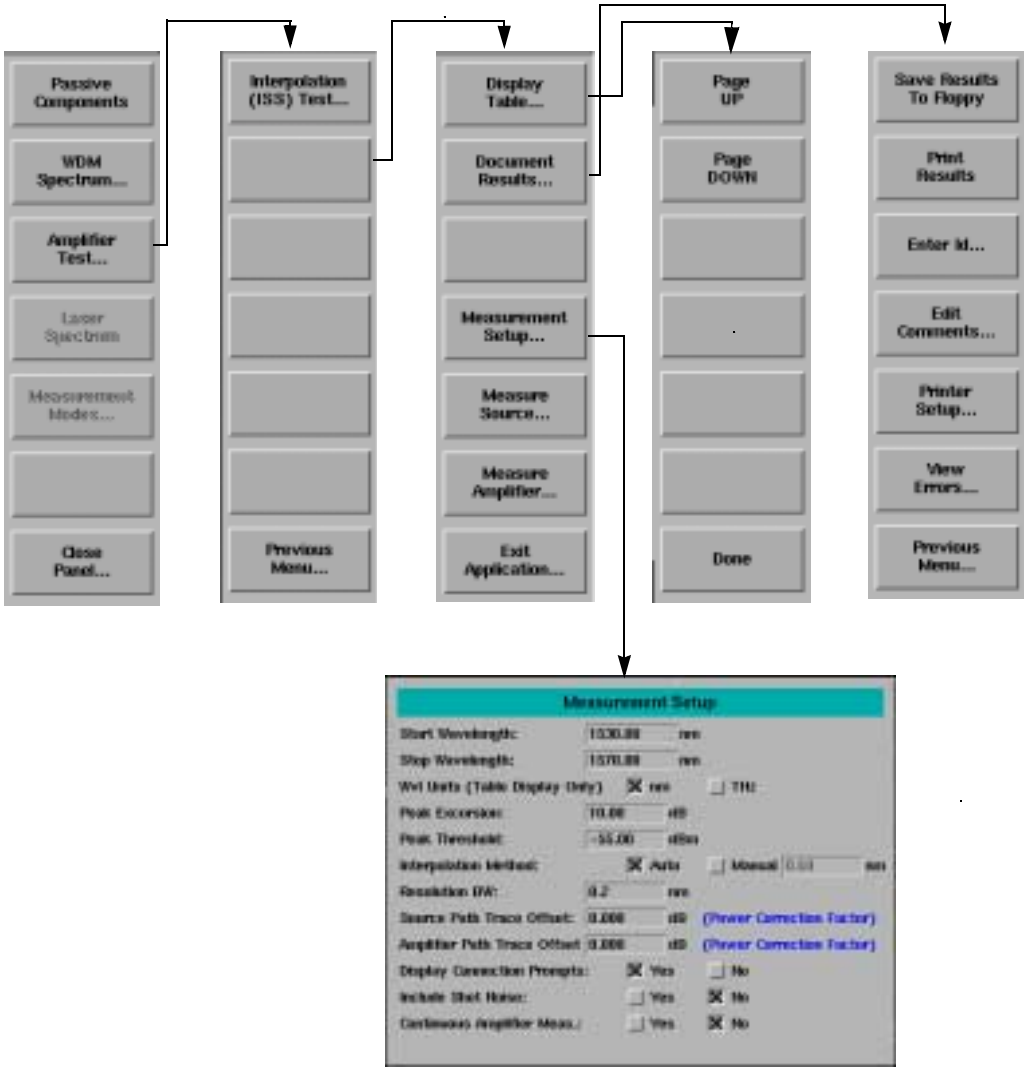

To Start the Amplifier Test Application

1 Press the front-panel Appl's key or, on the **Applications** menu, select **Launch an Installed Application**.

The following screen is displayed:

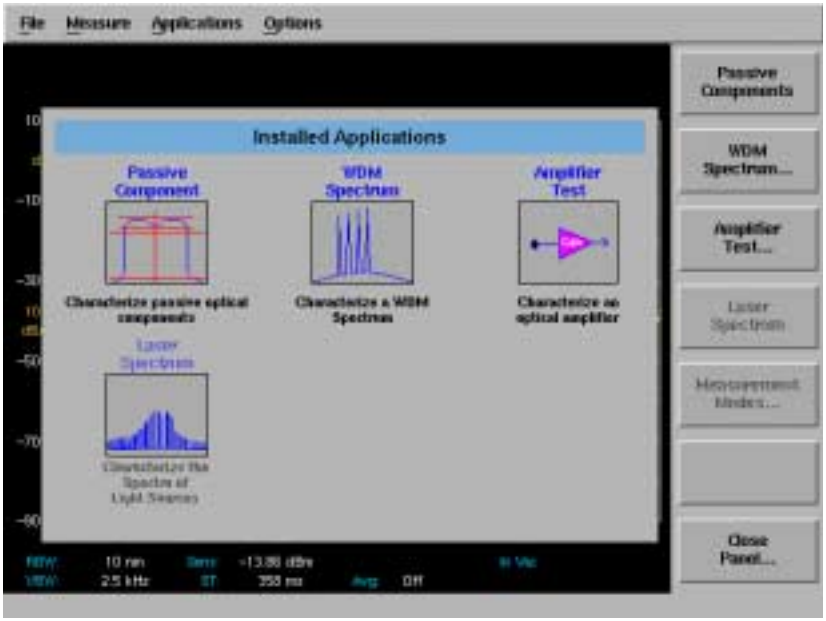

Applications Panel and Menu

The panel and the menu change whenever an application is installed or uninstalled. Each installed application has an icon on the panel and a corresponding softkey.

2 Press *Amplifier Tests* to bring up a second menu with a choice of amplifier tests.

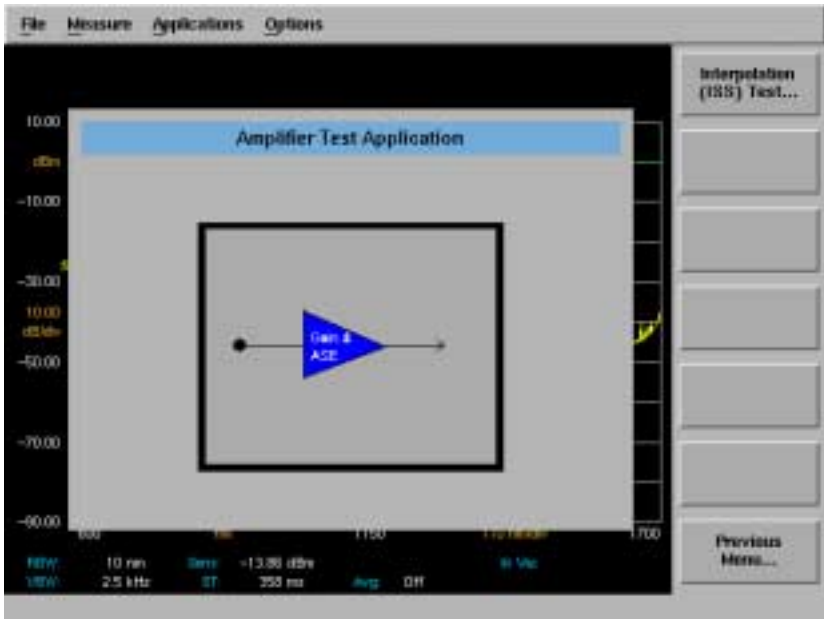

Amplifier Test Menu

Select *Interpolation (ISS) Test* to launch the application. In the future, more tests will be added to this menu.

When the interpolation ISS test is launched, the Interpolation ISS Test main menu is displayed and several changes to the standard OSA screen are made. The Marker Display Panel is replaced with the Interpolation ISS Test status panel.

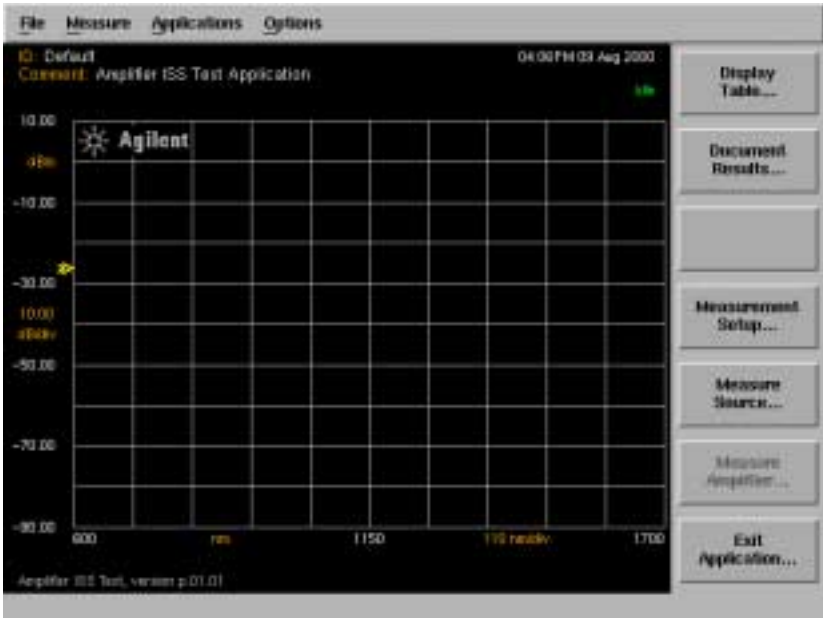

Status Panel

The status panel is always visible at the top of the screen when the application is running and consists of two lines of information. The top line contains the current Device ID on the left and the current date and time on the right. The second line contains a user-entered comment on the left and the measurement status on the right.

The above example indicates the application status is “`Idle`”.

To set up a measurement

The Measurement Setup dialog box allows you to define the parameters for the measurement.

Amplifier Test Measurement Setup

The *Measurement Setup...* softkey is enabled whenever the system is not actively measuring. Selecting this key opens the Measurement Setup dialog box

Navigating the Measurement Setup Window

The softkeys allow you to navigate through the measurement setup dialog box.

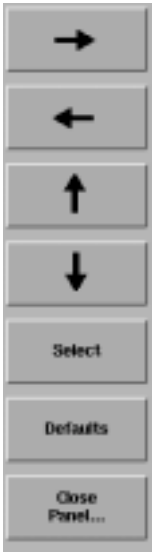

The **arrow** softkeys allow you to navigate from field to field in the dialog box. The highlighted parameter can be changed.

Select selects the highlighted parameter.

Defaults resets the parameters to their default condition.

Close Panel... saves the current setup and returns you to the previous menu.

The front-panel number keys, step keys, and knob on the OSA allow you to enter a numeric value in the highlighted field.

Measurement setup parameters

Under manual operation, all measurement parameters are set to default by pressing the *Defaults* softkey. Otherwise, they retain the previous setting from the last time the application was started. These settings are retained when Preset is pressed. Values are entered from the keypad or incremented using the knob or step keys.

Start Wavelength

Default: 1530 nm

Sets the start wavelength for the measurement span. Units are fixed in nm.

Stop Wavelength

Default: 1570 nm

Sets the stop wavelength for the measurement span. Units are fixed in nm.

Wavelength Units

Default: nm

Selects the wavelength units, either nm or THz. These units are used in the Display Table only.

Peak Excursion

Default: 10 dB

Sets the peak excursion value in dB. This is the amount of amplitude the trace must rise and fall to be considered a peak. Lower values lead to more signals being discerned, but if peak excursion is set too low, peaks in the noise floor may be discerned as signals. If peak excursion is set too high, legitimate peaks may not be discerned as signals.

Peak Threshold

Default: -55 dBm

Sets the peak threshold value in dBm. Power levels below this threshold are not considered for peak search.

Interpolation Method

Default: Auto

Sets the noise marker ‘noise offset’ interval to the left and right of the channel when making a noise power measurement. The noise power at the channel wavelength is the interpolation value of the noise markers to the left and right of the channel. The offset can be entered manually, or calculated automatically using (0.5×RBW+0.5nm).

The system measures half the distance between channels and compares this amount to the entered offset. If the half distance figure is closer to the channel, the system will override the manually entered offset value with the half distance value. This prevents adjacent channels from interfering with noise measurements.

Resolution Bandwidth

Default: 0.2 nm

Sets the resolution bandwidth value to be used during peak sweep. This determines the analyzer's ability to display two closely spaced signals as two distinct responses. Decreasing the resolution bandwidth provides a more detailed sweep but increases the scan time. The resolution bandwidth can be set to one of the following values: 0.07, 0.1, 0.2, 0.5, 1, 2, 5, or 10 nm. For model 86142, the minimum setting is 0.06 nm.

Source Path Trace Offset

Default: 0.000 dB

Sets an offset to compensate for any losses caused by cables and connections in the source path.

Amplifier Path Trace Offset

Default: 0.000 dB

Sets an offset to compensate for any losses caused by cables and connections in the amplifier path.

Display Connection Prompts

Default: Yes

Displays equipment setup prompts when Measure Source or Measure Amplifier are selected.

Include Shot Noise

Default: No

Sets a flag to include or exclude the 1/Gain term in noise figure calculations.

Continuous Amplifier Measurement

Default: Single

Allows you to select either single sweep measurement or continuous sweep measurement mode.

Calibrating the Signal Path Offsets

To compensate for any losses caused by the cables and connections in the signal paths, it is necessary to determine the path offsets using a power meter, such as the Agilent 8163A lightwave power meter.

The objective of measuring and calculating the offsets is to transfer the amplitude accuracy of the power meter to the application at it's reference plane.

Refer to "Measuring the Source" on page 1-19 and "Measuring the Amplifier" on page 1-22 for information on how to use the application to obtain source and amplifier path wavelength and power values. These values are used in calculating the path offsets.

To ensure accurate measurements, the system must be properly warmed up and calibrated. All OSA specifications apply when the instrument's internal temperature has been stabilized after 1 hour continuous operation, the auto align routine has been run, and user cal has been performed.

NOTE

As in all optical measurements, it is critical to follow good connector care practices. Always clean the connector interfaces before connecting. Refer to "Cleaning Connections for Accurate Measurements" in the optical spectrum analyzer user's guide.

CAUTION

Limit the power applied to the OSA to a maximum of +30 dBm total, +12 dBm per channel. To avoid exceeding the total safe input power, an attenuator should be installed at the OSA input. A 10 dB optical attenuator is available as option 030 for your OSA. Following this calibration procedure insures that this attenuation value will be subtracted from the measurement.

To perform an Auto Align

Before entering the amplifier test application, connect a reference signal to the instrument, then press Auto Align. This starts an automatic alignment procedure that should be performed whenever the instrument has been moved, subjected to large temperature changes, or warmed up at the start of each day.

Calculating Source and Amplifier Path Offsets

To calculate offsets in a standard measurement setup

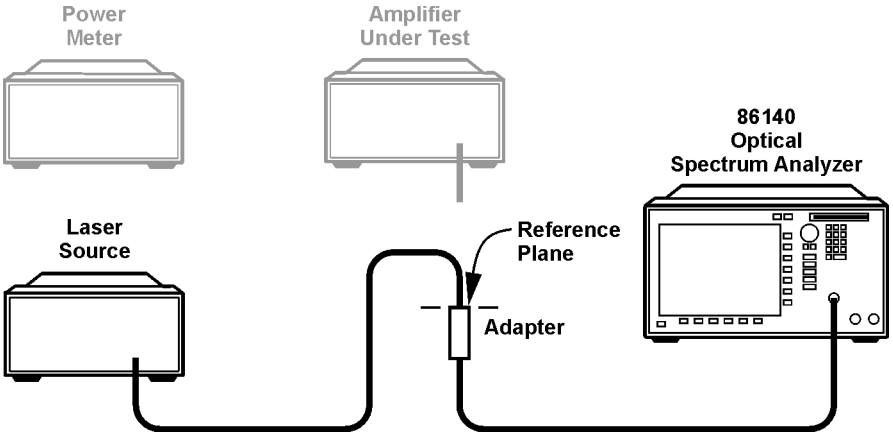

Figure 1-1. Reference Measurement

1. Connect the equipment as in Figure 1-1. Connect the source output and OSA input fibers at the reference plane.
2. Measure the source path using the OSA amplifier test application Measure Source process.
3. Without changing the setup, perform the Measure Amplifier process in the amplifier test application. This step is necessary to have the source data appear in the Display Table.
4. Record the source mean wavelength and sum of source signal power values from the Display Table.

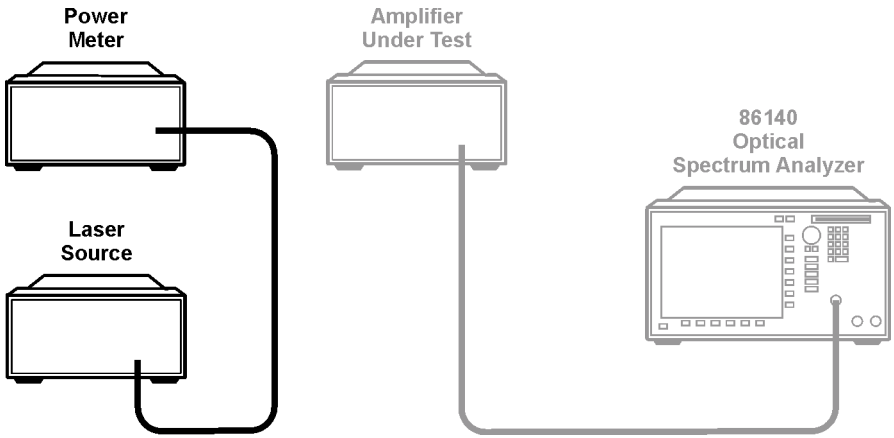

Figure 1-2. Power Meter Measurement

5 Connect the source to the power meter as in Figure 1-2. Set the power meter wavelength parameter to the source mean wavelength value.

6 Measure the power and record the value.

7 Calculate the difference between the power meter reading and the application reading using:

Offset = Power Meter Reading – Application Sum of Source Signal Power.

8 Enter the calculated value into the Measurement Setup dialog box as Source Path Trace Offset and Amplifier Path Trace Offset. For a standard measurement setup, the offsets in the source and amplifier paths will be the same.

9 To verify the offset is correct, repeat Measure Source and Measure Amplifier. The source total power should read the same as measured by the power meter in Step 6. The gain should be 0.0 dB for each channel.

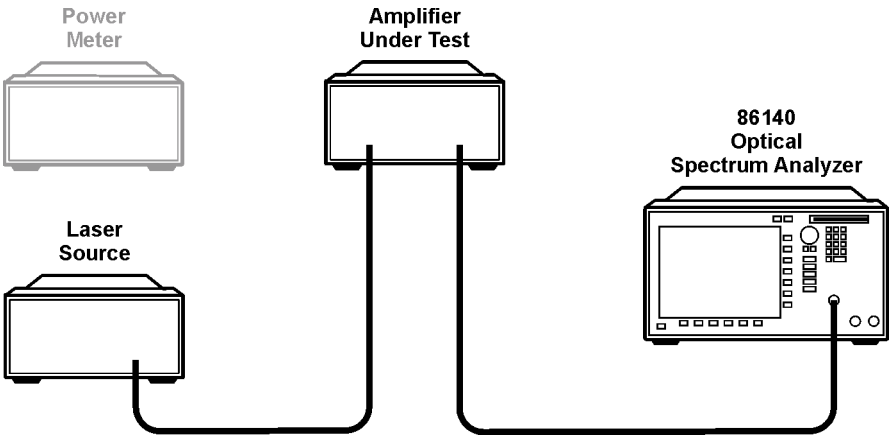

Figure 1-3. Amplifier Measurement

10 After measuring and verifying the path offsets, you can connect the amplifier under test as in Figure 1-3.

To calculate offsets in a complex measurement setup

More complex measurement setups can provide an alternative path for measuring the source. When this is the case, the offsets in the source and amplifier paths will be different. This second procedure accounts for these additional losses in a sample test configuration using switches.

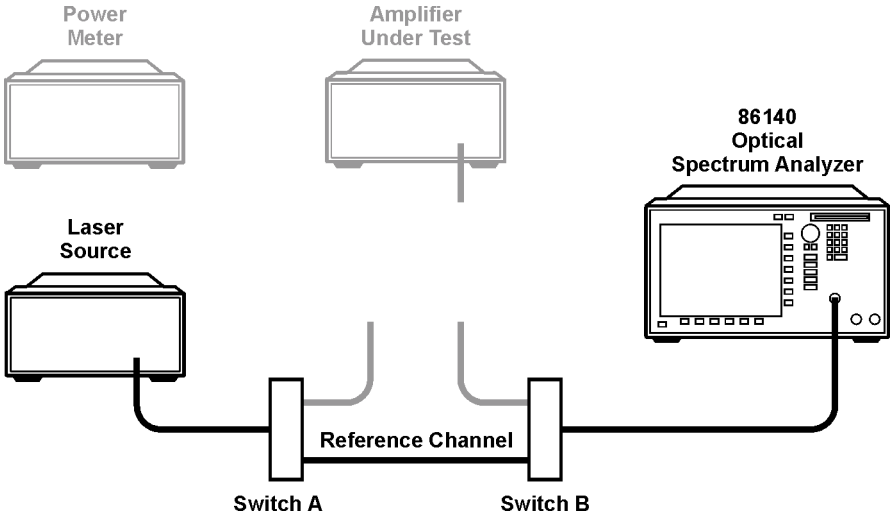

Figure 1-4. Source Path Measurement

1. Connect the equipment as in Figure 1-4. Set Switch A and Switch B to the reference channel position.
2. Measure the source path with the OSA amplifier test application.

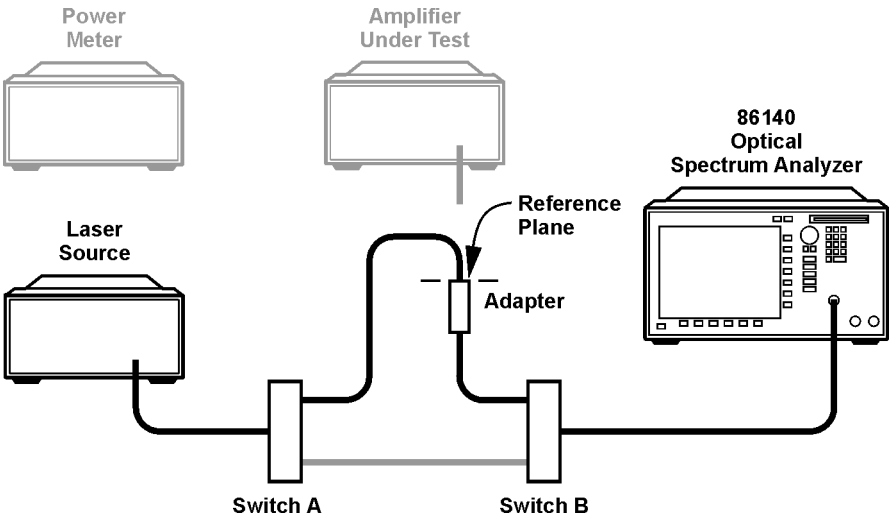

Figure 1-5. Amplifier Path Measurement

3 Connect the source output and receiver input fibers through the switches as in Figure 1-5. Set Switch A and Switch B to the amplifier channel position.

4 Measure the amplifier path with the OSA amplifier test application.

5 Record the source and amplifier mean wavelength and sum of signal power values from the Display Table.

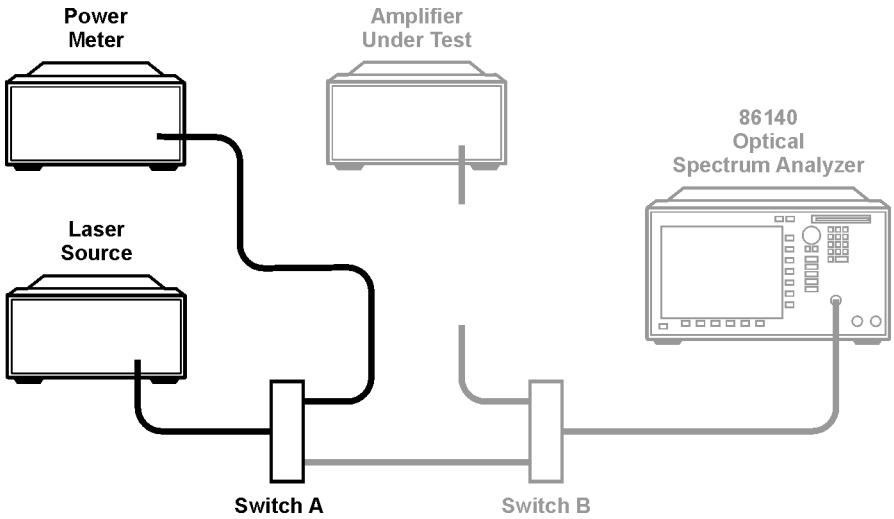

Figure 1-6. Power Meter Measurement

6 Connect the source to the power meter through switch A as in Figure 1-6. Set the power meter wavelength parameter to the source mean wavelength value.

7 Measure the power and record the value.

8 Calculate the difference between the power meter reading and the application source reading using:

Offset = Power Meter Reading – Application Sum of Source Signal Power.

9 Enter the calculated value into the Measurement Setup dialog box as the Source Path Trace Offset.

10 Calculate the difference between the power meter reading and the application amplifier reading using:

Offset = Power Meter Reading – Application Sum of Amplifier Signal Power.

11 Enter the calculated value into the Measurement Setup dialog box as the Amplifier Path Trace Offset.

12 To verify the offsets are correct, repeat Measure Source and Measure Amplifier. The source and amplifier total power should read the same as measured by the power meter in Step 7. The gain should be 0.0 dB for each channel.

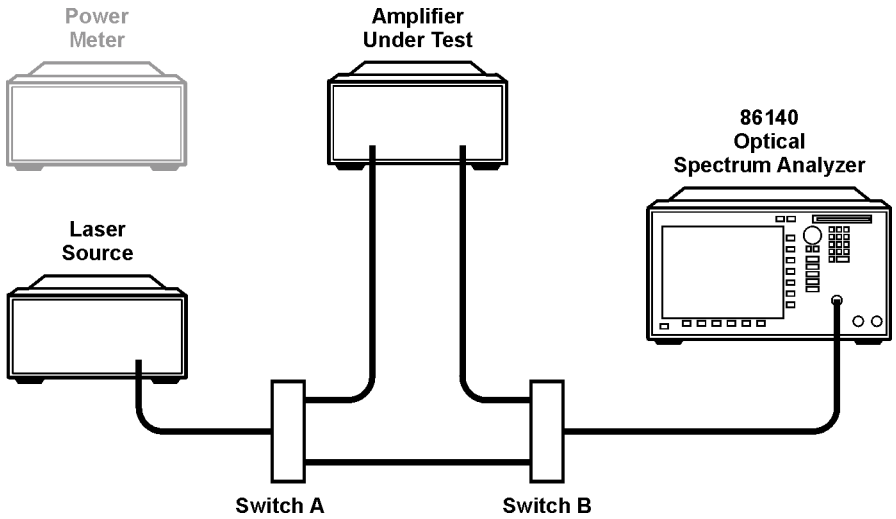

Figure 1-7. Amplifier Measurement

13 After measuring and verifying the path offsets, you can connect the amplifier under test as in as in Figure 1-7.

Measuring the Source

The first step of the two-step ISS method is a set of sweeps that measure signal wavelength, power, and spontaneous emission of the source. A second set of sweeps will measure the amplifier signal power and amplified spontaneous emission.

NOTE

The Measure Source step must be repeated if there is any change in the measurement parameters or the source wavelength and power. Source data will be lost when exiting the application and must be remeasured.

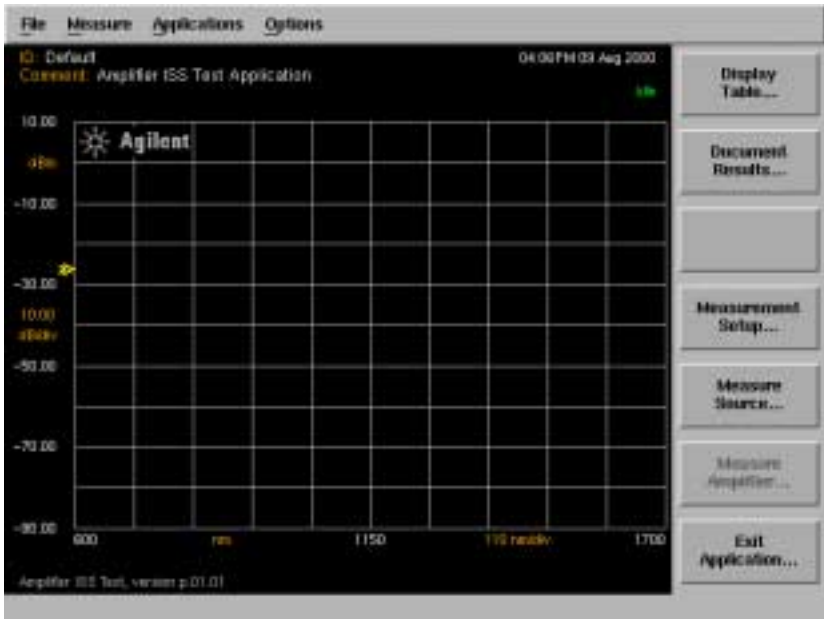

Measuring the Source

1 From the Interpolation ISS Test menu, select *Measure Source...* .

Note that the *Measure Amplifier...* softkey is disabled until the source measurement is completed.

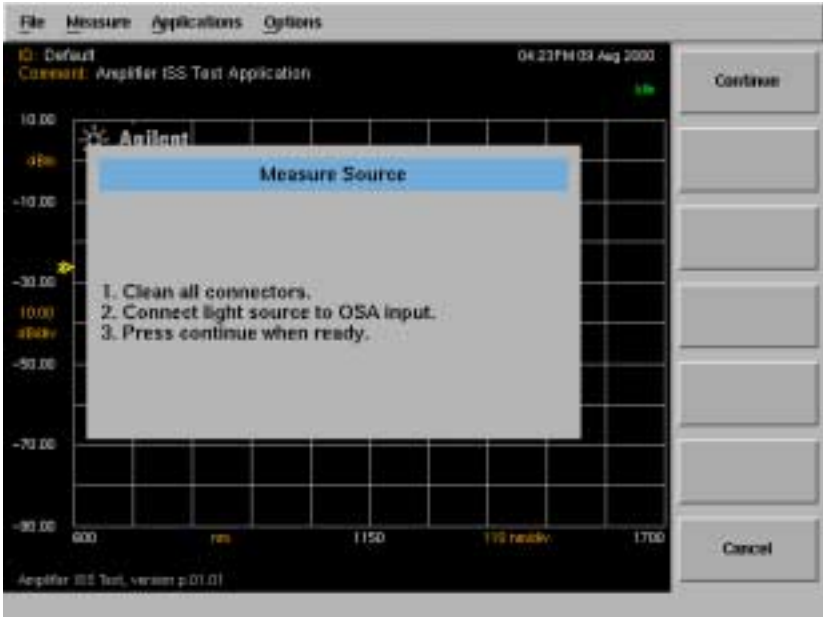

Source Measurement Prompts

2 The system prompts you to connect the source to the OSA.

The display connection prompts can be turned off in the measurement setup dialog box, in which case *Measure Source...* will immediately initiate the measurement.

3 Press *Continue* to initiate the measurement.

Measure Source... is replaced with *Stop Source Measurement...* while the measurement is in progress.

4 The progress of the measurement is noted on the status panel:

a An initial sweep is taken to set references, indicated by `"Source Initial Sweep..."`.

b A second sweep measures the peak of the signal, indicated by `"Source Peak Sweep..."`.

c A third sweep measures the noise level, indicated by “`Source Noise Sweep...`”.

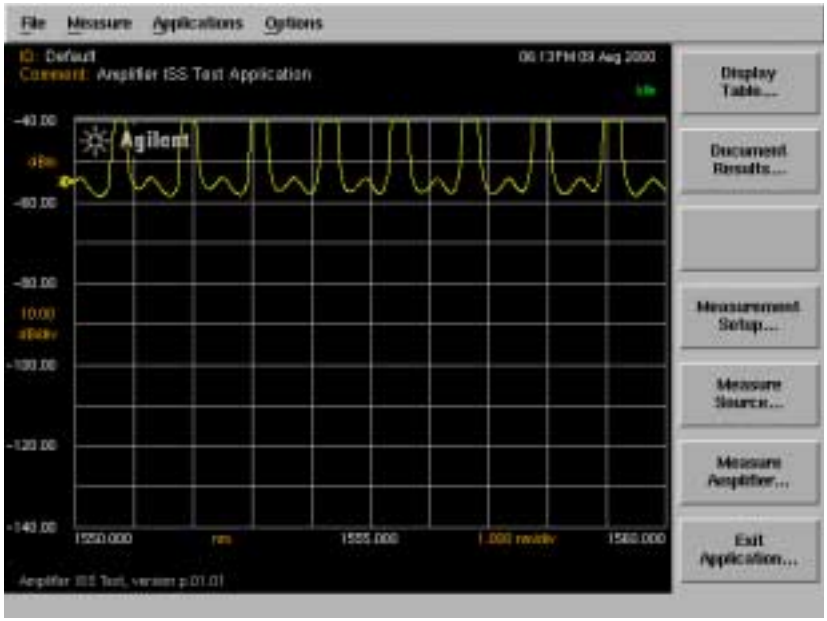

5 When the measurement is complete, the *Measure Amplifier...* softkey is enabled. The progress status label reads “`Idle`”.

Measuring the Amplifier

In the second step of the two-step process the amplifier is connected between the source and the OSA. The system measures the peak and noise power for the wavelengths measured in Measuring the Source and creates/updates the Display Table.

Amplifier Measurement Prompts

1. Press *Measure Amplifier...* to begin the process.
2. The system prompts you to install the device to be tested.

   The display connection prompts can be turned off in the measurement setup dialog box, in which case *Measure Amplifier...* will immediately initiate the measurement.

3 Press *Continue* to initiate the measurement.

The *Measure Source...* softkey is disabled. *Measure Amplifier...* is replaced with *Stop Amp Measurement...* while the measurement is in progress.

4 The progress of the measurement is noted on the status panel:

a An initial sweep is taken to set references, indicated by `"Amplifier Initial Sweep..."`.

b A second sweep measures the peak of the signal, indicated by `"Amplifier Peak Sweep..."`.

c A third sweep measures the noise level, indicated by `"Amplifier Noise Sweep..."`.

d After all the data is received, the application calculates the measurement results. The progress label reads `"Calculating Results..."`.

5 When the measurement is complete, the progress status label reads `"Idle"`.

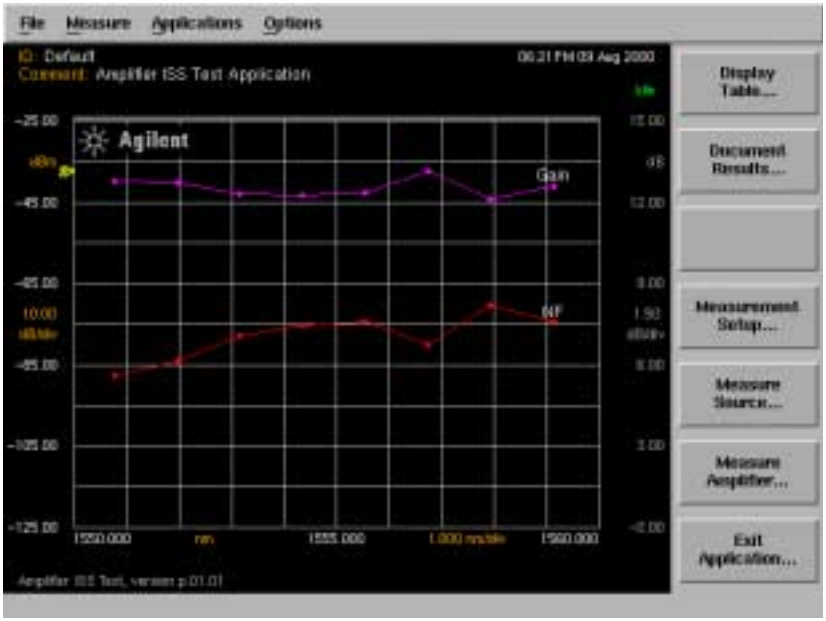

Amplifier Measurement Results

6 The measurement results will be displayed graphically. The points indicating the amplifier gain and noise figure are displayed relative to the dB scale on the right side of the graph. Negative noise figure values will not be displayed.

NOTE If Continuous Amplifier Measurement mode is selected in the measurement setup dialog box, the measurement will continue to update the points on the display and in the Display Table at the end of each measurement.

Display Table

The *Display Table...* softkey is enabled when an amplifier measurement is complete and valid data is available. The results are displayed in a table similar to the one shown below. The Page Up and Page Down keys display previous and next pages of data if available.

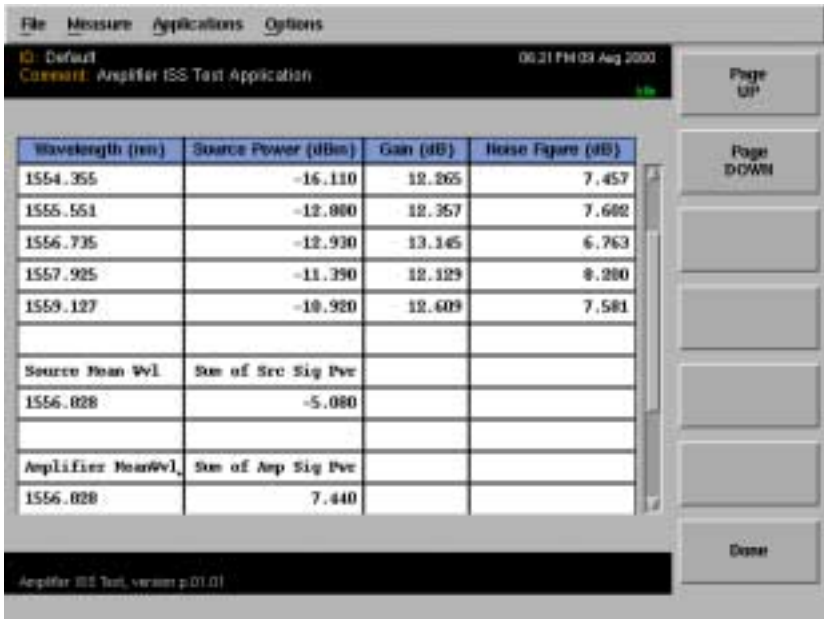

Wavelength (nm)	Source Power (dBm)	Gain (dB)	Noise Figure (dB)
1554.355	-16.110	12.265	7.457
1555.551	-12.880	12.357	7.682
1556.735	-12.930	13.145	6.763
1557.925	-11.390	12.129	8.280
1559.127	-10.920	12.609	7.581
Source Mean Wvl	Sum of Src Sig Pwr		
1556.028	-5.080		
Amplifier MeanWvl	Sum of Amp Sig Pwr		
1556.028	7.440		

When in continuous sweep mode the Interpolation ISS Test application continues to sweep and update the tabular data at the end of each measurement.

At the end of the table, after all channels present have been measured, the table will display values of source mean wavelength, sum of source signal power, amplifier mean wavelength, and sum of amplifier signal power.

For a description of mathematical calculations see Chapter 2, Theory of Operation.

Document Results

There are two ways to document results in the amplifier test application. You can either print them to a printer (specified under Printer Setup) or save them to a floppy disk.

After the source and amplifier measurements are complete and valid measurement data exists, the *Document Results...* softkey will be enabled.

Press *Document Results...* to display the Document Results selections.

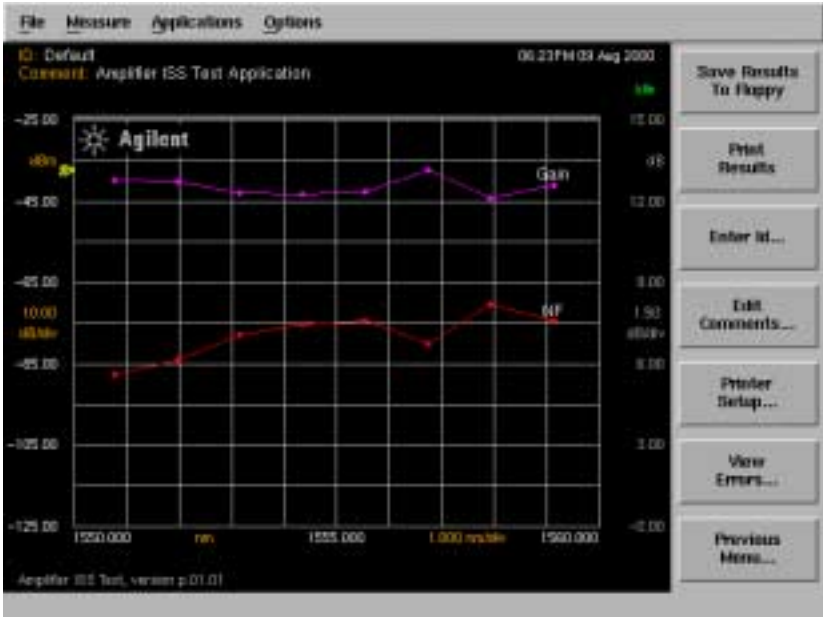

Document Results Menu

Saving the results to a floppy disk

Press the *Save Results to Floppy* softkey to save the current results to a file on the floppy drive.

If a device ID has been entered, the name of the file is defaulted to the last 8 characters of the device ID.

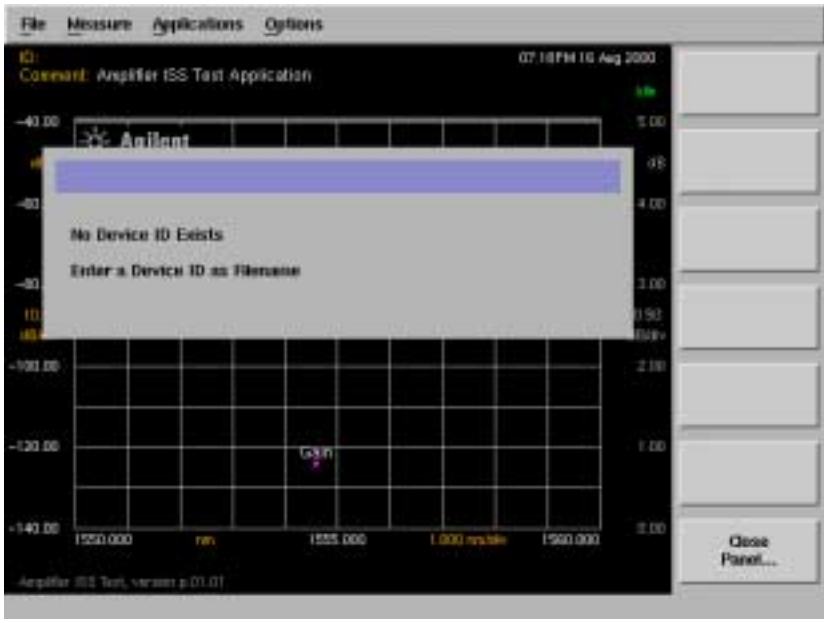

If no ID exists, a message prompts you to `"Enter a Device ID as Filename".` Press *Close Panel...* to return to the Document Results menu and select *Enter ID...* .

If the ID already exists, the warning "`Overwrite File?`" is displayed. Press *Overwrite File* to overwrite the existing file or *Cancel* to return to the Enter ID screen.

A successful save operation is confirmed by a progress message displayed on the bottom left of the OSA display.

The current file is saved in ASCII (*.csv)* spreadsheet format. Graphics data is stored in Computer Graphics Metafile (*.cgm)* graphics format. This is a vector graphics format that describes pictures and graphical elements in geometric terms.

Using the alphanumeric panel

Alphanumeric panels, such as the Device ID panel, allow you to enter identification and comment labels for the devices you test.

An example of an alphanumeric panel

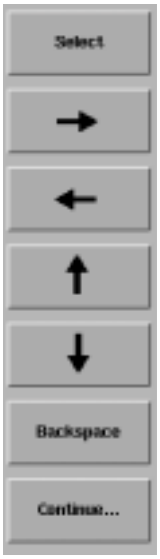

Select selects the highlighted character.

The **arrow** softkeys allow you to navigate from character to character in the dialog box.

Backspace removes a previously selected character.

Continue saves the current entry and returns you to the previous menu.

To enter a device ID

Press *Enter ID...* to access the Device Identification panel. Use the arrow and Select softkeys to enter the device ID. A maximum of 20 characters can be entered in this field.

Device Identification panel

.

To enter comments

Press *Enter Comments...* to access the Enter Comments panel. Use the arrow and Select softkeys to enter a comment. A maximum of 50 characters can be entered in this field.

Enter Comments panel

Printing the results

1 Press *Print Results* to print the results to the target printer.

The default setting is the internal printer and the default printout type is table only.

2 Press *Printer Setup...* to access the Printer Setup dialog box.

3 Use the arrow and Select softkeys to select the target printer, and the printout type. This setting is reset when the front-panel Preset key is pressed, otherwise the previous setting from the last time the application was started is retained.

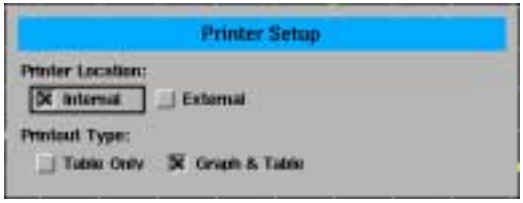

Printer Setup panel

The print operation is confirmed by a progress message displayed on the bottom left of the OSA display.

4 *Close Panel...* returns to the Document Results Menu.

The four possible print formats are shown in the following four figures:

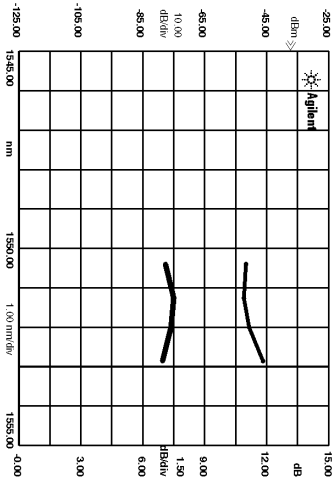

02:05PM 18 Aug 2000

DATA1 Amplifier ISS Test Application

Model# / Serial#	86140A / pilot00052
FW Rev / App Rev	p.01.67 p.01.01 / p.01.01
Sens / Measured In	-69.55dBm / In Vacuum

Wavelength (nm)	Source Power (dBm)	Gain (dB)	Noise Figure (dB)
1550.390	-5.440	11.024	7.106
1551.260	-5.800	10.874	7.532
1551.990	-5.800	11.169	7.420
1552.830	-5.980	11.810	6.946
Source Mean Wvl	Sum of Src Sig Pwr		
1551.567	0.150		
Amplifier MeanWvl	Sum of Amp Sig Pwr		
1551.634	11.370		

Graphics and Table, Internal Printer

8.5"

02:05PM 18 Aug 2000
DATA1
Amplifier ISS Test Application

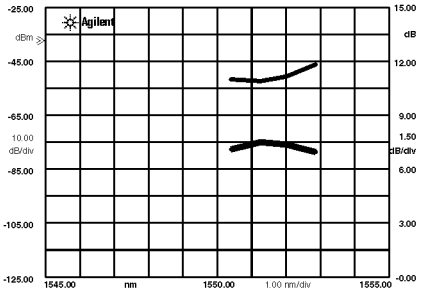

Model# / Serial#	86140A / pilot00052
FW Rev / App Rev	p.01.67 p.01.01 / p.01.01
Sens / Measured In	-69.55dBm / In Vacuum

Wavelength (nm)	Source Power (dBm)	Gain (dB)	Noise Figure (dB)
1550.390	-5.440	11.024	7.106
1551.260	-5.800	10.874	7.532
1551.990	-5.800	11.169	7.420
1552.830	-5.980	11.810	6.946
Source Mean Wvl	Sum of Src Sig Pwr		
1551.567	0.150		
Amplifier MeanWvl	Sum of Amp Sig Pwr		
1551.634	11.370		

Graphics and Table, External Printer

3.0"

02:05PM 18 Aug 2000

DATA1 Amplifier ISS Test Application

Model# / Serial#	86140A / pilot00052
FW Rev / App Rev	p.01.67 p.01.01 / p.01.01
Sens / Measured In	-69.55dBm / In Vacuum

Wavelength (nm)	Source Power (dBm)	Gain (dB)	Noise Figure (dB)
1550.390	-5.440	11.024	7.106
1551.260	-5.800	10.874	7.532
1551.990	-5.800	11.169	7.420
1552.830	-5.980	11.810	6.946
Source Mean Wvl	Sum of Src Sig Pwr		
1551.567	0.150		
Amplifier MeanWvl	Sum of Amp Sig Pwr		
1551.634	11.370		

Table Only, Internal Printer

8.5"

02:05PM 18 Aug 2000

DATA1	Amplifier ISS Test Application
Model# / Serial#	86140A / pilot00052
FW Rev / App Rev	p.01.67 p.01.01 / p.01.01
Sens / Measured In	-69.55dBm / In Vacuum

Wavelength (nm)	Source Power (dBm)	Gain (dB)	Noise Figure (dB)
1550.390	-5.440	11.024	7.106
1551.260	-5.800	10.874	7.532
1551.990	-5.800	11.169	7.420
1552.830	-5.980	11.810	6.946
Source Mean Wvl	Sum of Src Sig Pwr		
1551.567	0.150		
Amplifier MeanWvl	Sum of Amp Sig Pwr		
1551.634	11.370		

Table Only, External Printer

Viewing Errors

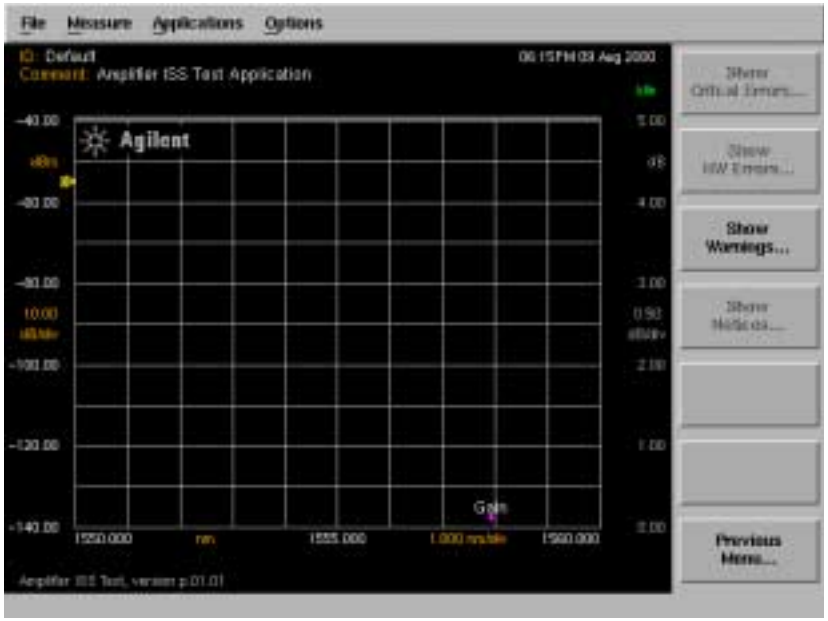

Error Menu

Any errors generated in the course of the test or result documentation will generate error codes. These codes can be accessed by pressing the *View Errors...* softkey. If any errors exist, the appropriate selection on the error menu will be enabled.

2

Theory of Operation

Interpolation Source Subtraction

The Amplifier Test application uses the Interpolation Source Subtraction (ISS) measurement technique to determine the noise figure of an amplifier. This method determines the amplified spontaneous emission (ASE) of the amplifier at the signal wavelength by measuring the noise power levels at wavelengths just above and below the signal and then interpolating to determine the level at the signal wavelength.

First, the spontaneous emission of the source is determined by measuring it's level at a specified offset (typically 1nm) above and below the signal wavelength and then taking the average of the measurements. This offset can be specified in the Measurement Setup dialog box, or calculated automatically using (0.5×RBW+0.5nm).

The same procedure is then used to determine the spontaneous emission at the output of the amplifier. The ASE and noise figure of the amplifier can then be determined using it's calculated gain and these two spontaneous emission values.

Gain and Spontaneous Emission

The purpose of an amplifier is to provide gain, which is defined as the ratio of output signal power to input signal power. These measured powers are actually the sum of the signal power and the small amount of spontaneous emission at the signal wavelength. This additional measured power can be a factor when high spontaneous emission levels are present.

Amplified Spontaneous Emission (ASE)

Ideally, an amplifier would amplify the input signal by it's gain and produce no additional output. However, amplifiers also produce ASE, which adds to the spontaneous emission of the source. This ASE is calculated as the difference between the output spontaneous emission power and the equivalent source spontaneous emission power measured at the amplifier output.

Interpolating Noise

In order to correctly determine the noise figure, the ASE level must be determined at the signal wavelength. This cannot be directly measured because the ASE is masked by the signal power level. The ISS method uses filter characteristics of the OSA to reject the signal and measure the spontaneous emission levels at wavelengths near each signal.

To determine the noise level at the signal wavelength, several measurement sweeps are taken. The initial sweep adjusts the reference level to peak. The second sweep measures the power level and channel wavelength for each channel present, as well as the maximum noise value. The third and final sweep sets the reference level to the maximum noise level measured in the second sweep. It then measures the noise power for each channel by taking a measurement above and below the channel wavelength at the predetermined offset value. These values are interpolated to determine the noise value at the channel wavelength.

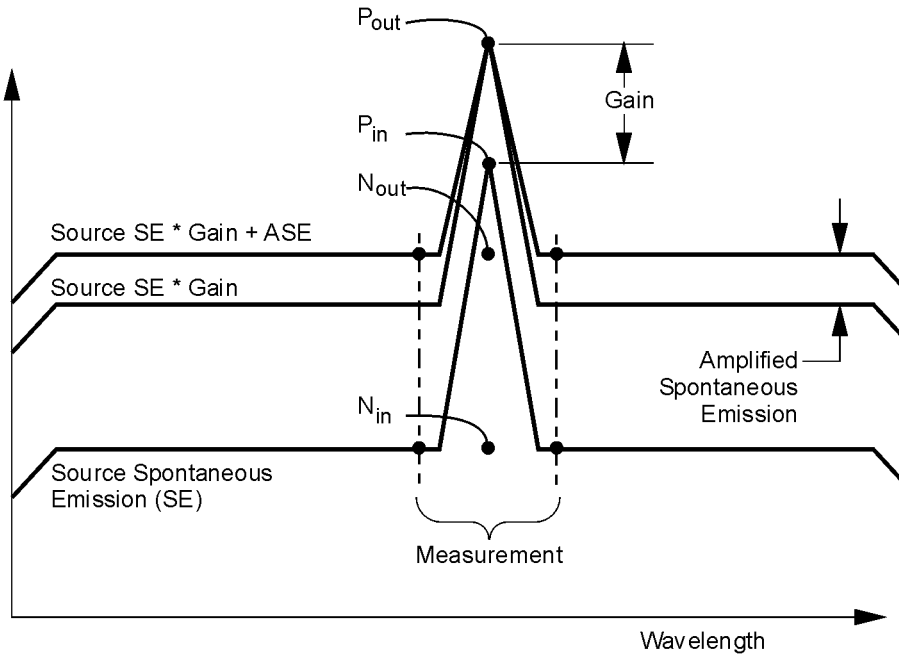

The noise figure of the amplifier is calculated from the measurements of the signal and ASE power levels using the following equations:

$$Gain = \frac{P_{out} - N_{out}}{P_{in} - N_{in}}$$

$$Gain(dB) = 10\log(Gain)$$

$$NoiseFactor = \frac{N_{out} - (N_{in}G)}{h\nu B_w G} + \frac{1}{G}$$

$$NoiseFigure = 10\log(NoiseFactor)$$

Where:

- P_{out} = amplifier output power
- P_{in} = amplifier input power
- N_{out} = interpolated output noise power
- N_{in} = interpolated source noise power
- G = amplifier gain
- 1/G = the optional shot noise component
- B_w = optical spectrum analyzer's noise bandwidth in Hertz
- h = Plank's constant (6.626×10^{-34} Watt seconds^2)
- v = signal frequency in Hertz

3

Remote Commands

Amplifier Test Application Remote Commands

The 86140-series user's guide for the mainframe provides detailed information on remote programming of the instrument. Only commands unique to the amplifier test application are included in this chapter.

The amplifier test application remote command set is comprised of two types of commands:

General Application support commands

These are part of the base firmware and support applications in general. They allow you to get a list of installed applications, load/unload an application, and so on. These commands are grouped under:

- INSTrument Subsystem Commands

Amplifier test application specific commands

These remote commands are specific to the amplifier test application and allow you to control the application remotely. They are grouped under the following subsystems:

- CALCulate Subsystem Commands
- FORMat Subsystem Commands
- INITiate Subsystem Commands
- SENSe Subsystem Commands

For more information, refer to the Remote Operation chapter in the 86140-series user's guide, or to the following book:

SCPI Consortium. *SCPI–Standard Commands for Programming Instruments, 1997*

Command Conventions

Convention	Description
< >	Angle brackets indicate text strings entered by the developer.
[ ]	Square brackets indicate that the keyword DEFAULT can be used instead of a value or a variable for that parameter. Refer to the actual command description for the behavior when the DEFAULT keyword is used for a parameter.
|	Indicates a choice of one element from a list.
{ }	Braces indicate a group of constants to select from. Each constant is separated by the | character.
name	Indicates the variable for which you provide a descriptive name. Any letter (Aa-Zz) followed by letters, digits (0-9) and underscore (_). Only the first 32 characters are significant.
spec_min	–infinity. The parameter *spec_min* cannot be a variable, only a constant or DEFAULT.
spec_max	+infinity. The parameter *spec_max* cannot be a variable, only a constant or DEFAULT.
from	Start wavelength or frequency of trace in nm (default) or THz.
to	Stop wavelength or frequency of trace in nm (default) or THz.
excursion	+excursion: means excursion dBs up (for example, from a pit). -excursion: means excursion dBs down (for example, from a peak).
ref_pt	The reference point to be used for a measurement keyword.

CALCulate Subsystem Commands

The CALCulate subsystem performs post-acquisition data processing. The CALCulate subsystem operates on data acquired by a SENSe function.

`CALCulate:DATA:CPOWers?`

Downloads the array of source channel powers measured. The data is returned in either an ASCII or binary form as determined by the FORMat:DATA command. The number of data points in this array is determined by the CALCulate:DATA:NCHannels? query.

`CALCulate:DATA:CGAin?`

Downloads the array of channel gain values measured. The data is returned in either an ASCII or binary form as determined by the FORMat:DATA command. The number of data points in this array is determined by the CALCulate:DATA:NCHannels? query.

`CALCulate:DATA:CNF?`

Downloads the array of channel noise figure values measured. The data is returned in either an ASCII or binary form as determined by the FORMat:DATA command. The number of data points in this array is determined by the CALCulate:DATA:NCHannels? query.

`CALCulate:DATA:CSTats?`

Downloads the following statistics using a single query:

- Source mean wavelength
- Sum of source signal power
- Amplifier mean wavelength
- Sum of amplifier signal power

The data is returned in either an ASCII or binary form as determined by the FORMAT:DATA command.

`CALCulate:DATA:CWAVelengths?`

Downloads the array of channel wavelengths measured. The data is returned in either an ASCII or binary form as determined by the FORMat:DATA command. The number of data points in this array is determined by the CALCulate:DATA:NCHannels? query. The units are either nanometers or terahertz and can be changed using the CALCulate:DATA:TABLe:WAVe command.

`CALCulate:DATA:NCHannels?`

Queries the number of channels detected in the last measurement. The data is returned as an ASCII integer.

`CALCulate:DATA:TABLe:WAVe NM|THZ`

`CALCulate:DATA:TABLe:WAVe?`

Sets the wavelength units used for the tabular display and for the CALCulate:DATA:CWAVelengths remote query. Default units are NM.

The instrument x-axis display always displays wavelength in nanometers and is not affected by this command.

Example

```
calc:data:tabl:wav nm          ! Assign table units to nm
```

`CALCulate:OFFSet:AMPLifier <numeric_value>`

`CALCulate:OFFSet:AMPLifier?`

Sets the trace level offset or power correction factor in dB for the amplifier path. The “dB” terminator is not required in the command.

Example

```
calc:offs:ampl 11              ! Assign an amp offset
calc:offs:ampl?                ! Read offset
```

`CALCulate:OFFSet:SOURce <numeric value>`

`CALCulate:OFFSet:SOURce?`

Sets the trace level offset or power correction factor in dB for the source path. The “dB” terminator is not required in the command.

Example

```
calc:offs:sour 13              ! Assign a source offset
calc:offs:sour?                ! Read offset
```

```
CALCulate:PEXcursion[:PEAK] <numeric_value>
CALCulate:PEXcursion[:PEAK]?
```

Sets the peak excursion value for the marker search routines. The peak excursion value is used to determine whether or not a local maximum in the trace is to be considered a peak. To qualify as a peak, both sides of the local maximum must fall by at least the peak excursion value.

Example

```
calc:pex 5          ! Assign peak excursion
calc:pex?           ! Read peak excursion
```

```
CALCulate:THReshold <numeric_value> [DBM]
CALCulate:THReshold?
```

Specifies the value for the peak search threshold. Peaks with amplitudes below this value will not be included in the channel count.

Units are DBM.

Example

```
calc:thr -40 dbm    ! Assign a peak threshold
calc:thr?           ! Read peak threshold
```

```
CALCulate:SNOise [on|off|0|1]
CALCulate:SNOise?
```

Sets the shot noise term included/excluded in noise figure calculations. Default value is false. By default the shot noise term will not be added to the noise figure.

Example

```
calc:sno off        ! Turn off shot noise term
calc:sno?           ! Read shot noise
```

FORMat Subsystem Commands

The FORMat subsystem sets a data format for transferring numeric and array information.

```
FORMat[:DATA] REAL[32,64]|ASCII
FORMat[:DATA]?
```

Specifies the trace data format used during data transfer via GPIB. This command affects data transfers for the CALCulate[:DATA] subsystem.

The ASCII format is a comma-separated list of numbers.

The REAL format is a definite-length block of either 32-bit or 64-bit floating-point binary numbers. The definite-length block is defined by IEEE 488.2: a "#" character, followed by one digit (in ASCII) specifying the number of length bytes to follow, followed by the length (in ASCII), followed by length bytes of binary data. The binary data is a sequence of 8-byte floating point numbers, default to 64-bit and selectable to 32-bit.

INITiate Subsystem Commands

`INITiate:IMMediate[:SEQuence [1|2]]`

Initiates the source measurement (sequence 1) or amplifier measurement (sequence 2) based on the sequence number. Default is sequence 2.

INSTrument Subsystem Commands

The INSTrument subsystem provides a mechanism to identify and select logical instruments by either name or number. Arguments and responses are case sensitive.

`INSTrument:CATalog?`

`{OSA,PassiveComponent,WDM_AutoScan,Amp_ISS_Test<null>}`

Comma-separated list of strings representing the modes and applications supported in the instrument.

`INSTrument:CATalog:FULL?`

`{OSA,0,PassiveComponent,1,WDM_AutoScan,4,Amp_ISS_Test,5}`

Comma-separated list of string-numeric pairs representing the modes and applications supported in the instrument.

`INSTrument:SELect <identifier> identifier - string`

`INSTrument:NSELect <numeric_value>`

`INSTrument:NSELect?`

Loads the application or instrument mode specified. Use the `CATalog:FULL?` command to obtain the number. Firmware revisions will add additional applications and the order may vary.

Example

```
inst:sel 'Amp_ISS_Test'     !Select amplifier test
inst:sel 5                  !Select amplifier test by number
inst:sel?                   !Read test
```

`INSTrument:*RST`

Exits the amplifier application and returns the instrument to standard operation.

SENSe Subsystem Commands

The SENSe setup commands control the specific settings of the device.

```
SENSe:BANDwidth|BWIDth[:RESolution]: <numeric_value> [M|NM|UM|A]
SENSe:BANDwidth|BWIDth[:RESolution]:?
```

Specifies the resolution bandwidth value used for the sweep. Default units are NM. The resolution bandwidth can be set to one of the following values: 0.07, 0.1, 0.2, 0.5, 1, 2, 5, or 10 nm. For model 86142, the minimum setting is 0.06 nm.

Example

```
sens:bwid .5 nm          ! Select a RBW for measurement
sens:bwid?               ! Read bandwidth
```

```
SENSe:INTerpolation:OFFset:VALue <numeric_value> [M|NM|UM|A]
SENSe:INTerpolation:OFFset:VALue?
SENSe:INTerpolation:OFFset:AUTO [on|off|0|1]
SENSe:INTerpolation:OFFset:AUTO?
```

Specifies the noise measurement locations for interpolation. If auto is set to true, then the application will calculate the best offset value. Default units are NM.

```
SENSe:[WAVelength:]STARt <numeric_value> [M|NM|UM|A|HZ|KHZ|MHZ|GHZ]
SENSe:[WAVelength:]STARt?
```

Specifies the start wavelength for the amplifier test application. Default units are NM.

Example

```
sens:star 1500 nm        ! Select the start wavelength
sens:star?               ! Read wavelength
```

```
SENSe:[WAVelength:]STOP <numeric_value> [M|NM|UM|A|HZ|KHZ|MHZ|GHZ]
SENSe:[WAVelength:]STOP?
```

Specifies the stop wavelength for the amplifier test application. Default units are NM.

Example

```
sens:stop 1540 nm        ! Select the stop wavelength
sens:stop?               ! Read wavelength
```

Sample Program

Description

This program demonstrates the amplifier test application.

Program

```
!**********************Select Amplifier ISS Test**********************
!
ASSIGN OUTPUT TO 723;EOL CHR$(10) END  ! Use LF and EOI as terms
!
OUTPUT 723;"inst:sel 'Amp_ISS_Test'"  ! Select Amp test
!
!************************Measure the Source************************
!
INPUT "Connect source and press Enter to continue",A$
OUTPUT 723;"init:imm:seq 1"        ! Take a source measurement

!************************Measure the Amplifier************************
!
INPUT "Connect amplifier and press Enter to continue",A$
OUTPUT 723;"init:imm:seq 2"        ! Take an amplifier measurement

!*************************Read the Results*************************
!
OUTPUT 723;"calc:data:nch?"        ! Find number of channels measured
ENTER 723;Nchannels
PRINT "Number of channels"
PRINT Nchannels
PRINT
!
ALLOCATE Datarray(1:Nchannels)
!
OUTPUT 723;"calc:data:cwav?"       ! Read in the channel wavelengths
ENTER 723;Datarray(*)
PRINT "Channel wavelengths"
PRINT Datarray(*)
PRINT
!
OUTPUT 723;"calc:data:cpow?"       ! Read in the channel power array
ENTER 723;Datarray(*)
PRINT "Channel powers"
PRINT Datarray(*)
PRINT
```

```
!
OUTPUT 723;"calc:data:cga?"        ! Read in the channel gains
ENTER 723;Datarray(*)
PRINT "Channel Gains"
PRINT Datarray(*)
PRINT
!
OUTPUT 723;"calc:data:cnf?"        ! Read in the channel noise figures
ENTER 723;Datarray(*)
PRINT "Channel noise figures"
PRINT Datarray(*)
PRINT
!*
!************************Read the test results************************
!
OUTPUT 723;"calc:data:cst?"        ! Query statistics table results
ENTER 723;Sourmwl;Sumsrcpwr;Ampmwl;Sumsamppwr
PRINT "Source Mean WL"
PRINT Sourmwl
!
PRINT "Sum of Src Sig Pwr"
PRINT Sumsrcpwr
!
PRINT "Amplifier Mean Wvl"
PRINT Ampmwl
!
PRINT "Sum of AMP Sig Pwr"
PRINT Sumsamppwr
PRINT
!
!************************Exit the application************************
!
OUTPUT 723;"*RST"                  ! Exit amplifier application
LOCAL 723                          ! Release OSA from remote
END
```

Test Results

```
Number of channels
 4

Channel wavelengths
 1.55039E-6        1.55126E-6        1.55199E-6        1.55283E-6

Channel powers
-5.43510863        -5.79789344        -6.33410061        -5.97747801

Channel Gains
 11.024021         10.8738203         11.1689193         11.8100457
```

```
Channel noise figures
 7.10625572        7.53191082        7.42049031        6.94632562

Source Mean WL
 1.55156722E-6
Sum of Src Sig Pwr
 .0146547392
Amplifier Mean Wvl
 1.55163422E-6
Sum of AMP Sig Pwr
 1.1371750
```

4

Contacting Agilent Technologies

Contacting Agilent Technologies

To learn more about your optical spectrum analyzer and other lightwave optical communication test solutions, visit our Internet web site. Before returning an instrument for service, call the Agilent Technologies Instrument Support Center at (800) 403-0801, or visit the Agilent Lightwave web site at http://www.agilent.com/comms/lightwave. See “Agilent Technologies Service Offices” on page 4-3 for a list of service centers.

Agilent Technologies Service Offices

Before returning an instrument for service, call the Agilent Technologies Instrument Support Center at (800) 403-0801, or call one of the numbers listed below.

Agilent Technologies Service Numbers

Austria	+43-1-25125-7006
Belgium	02-788 9340
Brazil	(+55-11) 7297-4771
China	86 10 6261 3819
Denmark	+45 45 99 15 15
Finland	358-10-855-2360
France	01.69.82.66.66
Germany	(01805)24-6330
India	080-34 34755
Ireland	01 205 4538
Italy	+39 02 9260 8329
Japan	(81)-426-56-7799
Korea	82/2-3770-0400
Mexico	(5) 258-4826
Netherlands	020-547 2111
Norway	+47 22 73 57 59
Russian Federation	+7-095-797-3628
Spain	(34/91) 631 1213
Sweden	(08) 506 487 00
Switzerland	+41-1-735 9300
United Kingdom	07004 666666
United States and Canada	(800) 403-0801