Established 1981
Advanced Test Equipment Rentals
www.atecorp.com 800-404-ATEC (2832)

DWG NO. 10-A-MFA-XX | SHEET 1 | REV B

SPECIFICATIONS:

10 WATT BI-DIRECTIONAL COAXIAL ATTENUATOR
POWER RATING: 10 WATTS MAXIMUM @ 40°C.
12 WATTS MAXIMUM @ 25°C.
CONNECTORS: SMA MALE/FEMALE, PASSIVATED STAINLESS STEEL
FREQUENCY RANGE & VSWR: DC TO 1GHz AT 1.10:1 MAX.
1GHz TO 4GHz AT 1.25:1 MAX.
IMPEDANCE: 50 OHMS, NOMINAL
AMBIENT TEMPERATURE RANGE: -40°C TO +40°C
OPERATING POSITION: ANY
COOLANT: DRY (CONVECTION COOLED)
FINISH: BLACK ANODIZED COOLING FINS, SILVER OR TRI-ALLOY PLATED CONNECTORS
NOMINAL SIZE: 2.2"L X 2.3" DIA.
WEIGHT: APPROX. 5 OZ.

REVISIONS				
ZONE	REV	DESCRIPTION	DATE	APPROVED
	A	ECN #0185	12-22-97	MBV
	B	ECN #0246	2-3-00	MBV

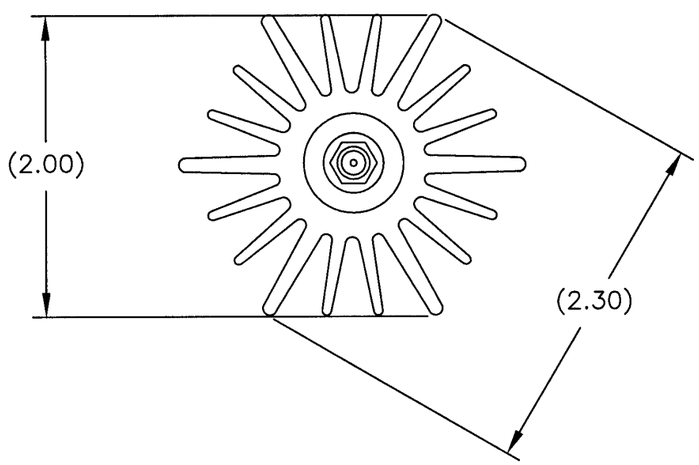

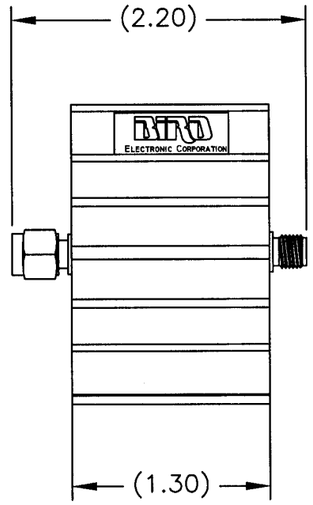

NOTE:
FOR VALUES NOT LISTED, REFER TO THE NEXT HIGHER ATTENUATION LEVEL FOR SPECIFICATIONS. FOR ATTENUATION VALUES GREATER THAN THE HIGHEST LISTED ATTENUATION VALUE, REFER TO THE VALUE 1/2 THE DESIRED ATTENUATION LEVEL, THEN DOUBLE THE LISTED SPECIFICATION VALUES, UNLESS OTHERWISE SPECIFIED.

XX = DASH NUMBER (dB VALUE)

DASH NO.	dB ATTEN.	DC – 1GHz ATTENUATOR ACCURACY ±dB	1 – 4GHz ATTENUATOR ACCURACY ±dB
-30	30	±0.8 dB	±1.3 dB
-20	20	±0.5 dB	±1.0 dB
-10	10	±0.4 dB	±0.8 dB
-06	6	±0.4 dB	±0.6 dB
-03	3	±0.3 dB	±0.5 dB
-02	2	±0.3 dB	±0.5 dB
-01	1	±0.3 dB	±0.5 dB

UNLESS OTHERWISE SPECIFIED DIMENSIONS ARE IN INCHES TOLERANCES ARE:
FRACTIONS ±1/64 DECIMALS .XX= ±.010 .XXX= ±.005 ANGLES ±30'
MILLIMETERS .X= ±.4 .XX= ±.12
DO NOT SCALE DRAWING

MATERIAL

FINISH

THIS DRAWING IS THE PROPERTY OF THE BIRD ELECTRONIC CORPORATION. THE DESIGNS AND SPECIFICATIONS DISCLOSED HEREON ARE PROPRIETARY AND SHALL NOT BE REPRODUCED, NOR COPIED, NOR USED AS THE BASIS FOR THE MANUFACTURE OR SALE OF APPARATUS OR DEVICES WITHOUT THEIR EXPRESS WRITTEN CONSENT.

APPROVALS	DATE
DRAWN D.M.RINK	3-17-03
CHECKED	
APPROVED MABEN	3-19-03
	AUTOCAD

BIRD Electronic Corporation
Cleveland (Solon) Ohio USA

TITLE: ATTENUATOR, SMA MALE/FEMALE, 10W

SIZE	FSCM NO.	DWG. NO.	REV
B	70998	10-A-MFA-XX	B

SCALE	COMM CODE	SHEET
1:1	AT1	1 OF 1