View 5

Characteristics

EXTENDED 3 YEARS WARRANTY

Easy to replace electrodes

3 Bright LEDs for dark environment

Detachable heat oven for SOC

Ceramic Clamp - Improved durability

Mirrorless - easy maintenance

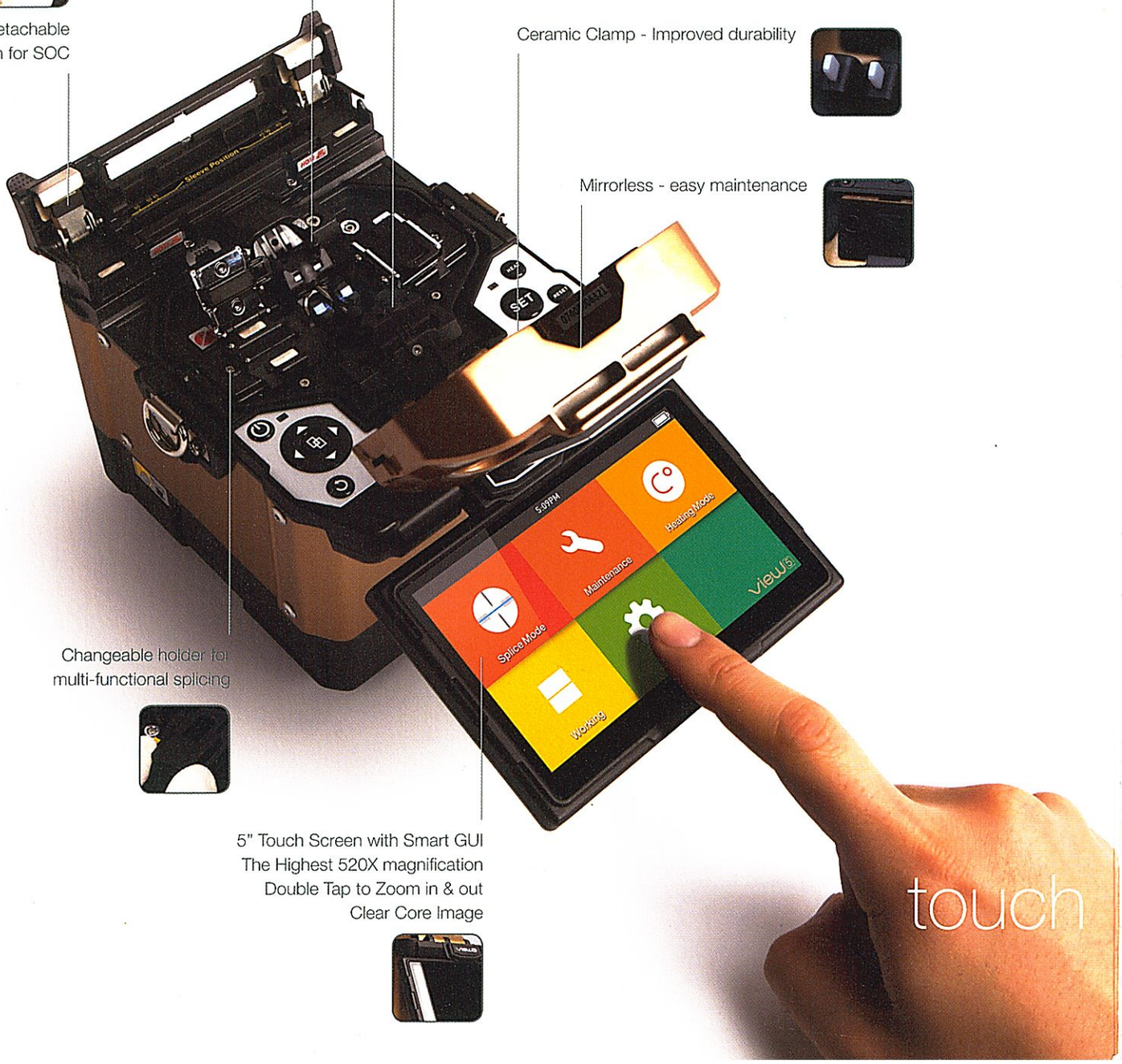

Changeable holder for multi-functional splicing

5" Touch Screen with Smart GUI
The Highest 520X magnification
Double Tap to Zoom in & out
Clear Core Image

Description

View 5, a core-alignment splicer with the world's highest fiber image magnification rate, is the most dependable fusion splicer in the market. View 5's 5 inch high-resolution color LCD touch screen with user-friendly intuitive GUI (Graphic User Interface) offers large and clear fiber images to users. By double-tapping the screen, users can Zoom In & Out the image to the world's highest magnification of 520x. Also View 5's compatibility with SOC (Splice-On-Connectors) will bring satisfactory experiences to users in FTTx field. Moreover, the 3 LED lights provide bright splice condition to the users working under dark environments. View 5 is the new industry standard of core-alignment splicer in the telecommunications industry.

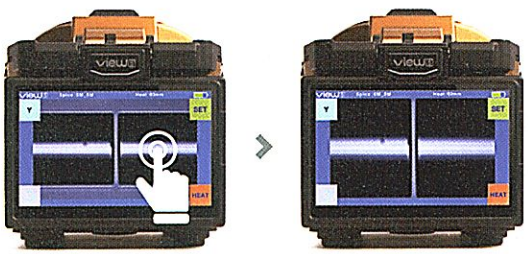

Double Tapping

By double-tapping the screen, users can zoom in the fiber image to the industry's highest magnification of 520x. Fiber condition can be easily checked with unaided eyes.

Specifications	
Model	View 5
Dimension	147H x 130W x 155D mm
Weight	2.21KG (with battery) / 1.85KG (without battery)
Number of Fiber	Single
Applicable Fibers	SM(ITU-T G.652&G.657) / MM(ITU-T G.651) / DS(ITU-T G.653) / NZDS(ITU-T G.655)
Compatible Fiber / Cable	0.25~3.0 mm / Indoor Cable
Cleaved Length	Diameter: 0.125~1 mm / Cleave Length: 8~16 mm
Splicing Mode	Preset 35 modes / Max 128 modes
Typical Splice Loss	SM: 0.02dB / MM:0.01dB / DS:0.04dB / NZDS: 0.04dB / G.657: 0.02dB(ITU-T Standard)
Return Loss	>>60dB
Lighting	3 White LEDs
Splicing Time	Auto mode : 9 sec / Quick mode : 7 sec
Estimated Splice Loss	Available
Protection Sleeve Length	20~60 mm
Heating Time	Typical heating time: 35 sec
Results Storage	The last 2000 results
Tension Test	1.96~2.25N
Operating Condition	Operating Altitude: 0~5000m above sea level, 0~95% relative humidity, -10~50°C, Max Wind 15m/s
Storage Condition	0~95% relative humidity, -40~80°C
Display	90° bi-directional view, 5.0" Color High Resolution Display
Fiber View & Magnification	X, Y, XY, X/Y : 520X Magnification
Power Supply	AC Input 100-240V, DC Input 9-14V
No. of Splice / Heating with Battery	4200mAh Battery Capacity, Typical 170 times (Splice+Heat)
Operating Methods	Button / Touch screen
Automatic Calibration	Automatic arc calibration by air pressure and temperature
Electrode Life	3500 arcs, can be extended by using an electrode grinder
Terminal	USB2.0 / MINI USB / HDMI

Weight and Dimensions

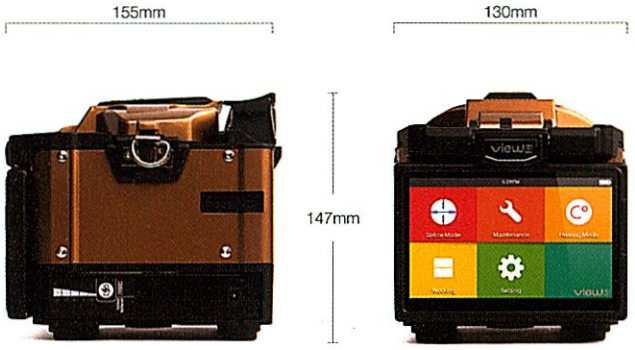

Height: 5.78 inches (147 mm)
Width: 5.11 inches (130 mm)
Depth: 6.10 inches (155 mm)
Weight: 4 pounds (1.85 kg without battery)

Detailed View

Package

Package	
Fusion Splicer	View 5
High Precision Cleaver	VF-15H
Fiber Holder	VFH-40 / FH-SOC
AC Adapter	JS-180300
Cooling Tray	CG-22
Electrode	E-50
Manual CD	CD
Battery Pack	LBT-40
Power Cable	ACC-25
Carrying Case	NBX-35
Stripper	CFS-2

Please visit us on Facebook www.facebook.com/innoinstrument

INNO INSTRUMENT™ | You dream, we DESIGN

Copyright © 2014 INNO Instrument Inc. All rights reserved.
11, Sunhwan-ro 214beon-gil, Jungwon-gu, Seongnam-si, Gyeonggido 462-807, Republic of Korea
tel 82-31-742-8755 fax 82-31-742-8799

37/F, King Palace Plaza, 52A Sha Tsui Rd, Tsuen Wan, N.T., Hong Kong
tel 852-3590-5555 fax 852-3996-8443

Printed in Korea

www.innoinstrument.com