Advanced Test Equipment Rentals
www.atecorp.com 800-404-ATEC (2832)
Established 1981

DOUBLE-RIDGE WAVEGUIDE BROADWALL DIRECTIONAL COUPLERS

- **HIGH DIRECTIVITY OR EXTRA HIGH DIRECTIVITY**
- **BUILT TO LAST**

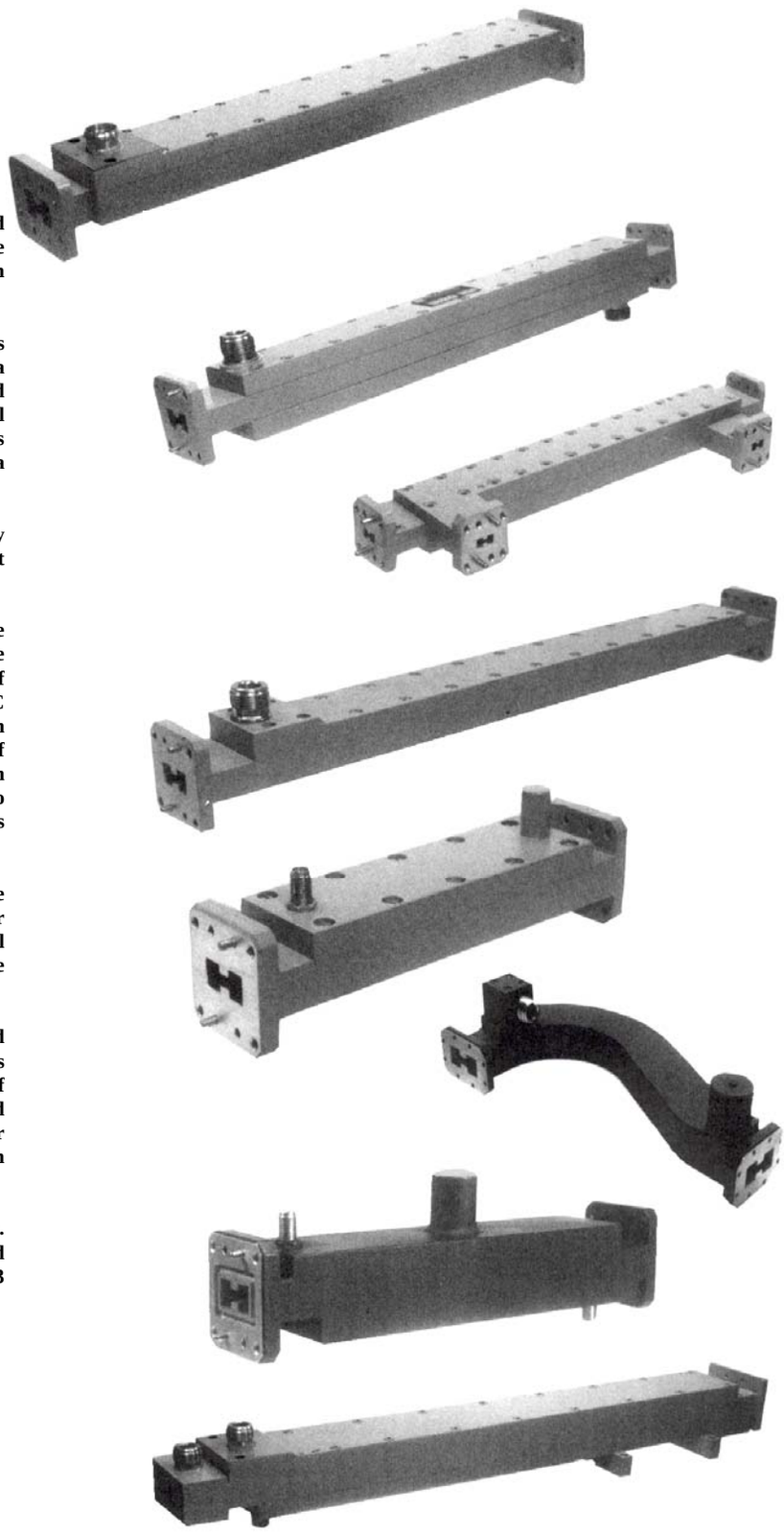

DESCRIPTION

These directional couplers consist of double-ridge primary and secondary waveguides sharing a common broadwall where multi-hole arrays provide the required coupling level in the forward direction relative to the input wave and high directivity in the reverse direction.

In the basic R160 series, the primary waveguide is flanged at both ends with excellent VSWR and loss characteristics while the secondary has a precision internal termination at its isolated end and a well-matched coaxial output at the coupled port suitable for attaching a video crystal detector or power monitor. In the H-bend style, a flange output is provided in place of the connector for applications requiring a waveguide coupled port.

The dual R200 series ahas two coupled secondaries to independently monitor both the forward and reverse waves with the same or different coupling level on each side.

Broadwall couplers are capable of superior directivity due to the large number of coupling holes which can be used. As such, they are the heart of any reflectometer test stand measuring the reflection of double-ridge components. Given the importance of directivity, MEC offers two options: the standard R160 & R200 with minimum directivity of 30 dB adequate for most laboratory measurements of VSWR down to about 1.12:1 and the R160A series with minimum directivity of 38 dB to measure VSWR levels as low as 1.04:1 or to perform measurements requiring high precision such as in standards labs and to calibrate other devices.

Available options which can be provided upon request include coupling levels as tight as 3 dB and as loose as 80dB, high power versions for peak and CW transmitter stands, various mechanical configurations, compact versions, pressure sealing and a large assortment of waveguide flanges and coaxial connectors.

While most couplers of this type are made of waveguide extrusions and discrete flanges which are joined together by dip-brazing. MEC's couplers are fabricated as an integral unit to minimize the number of leaky seams, improve dimensional control, preserve surface finish and prevent internal distortions. The result is a sturdy unit with superior electrical performance well suited for many years of rough service on the bench or in the field.

Flanges are cover type with alternate tapped and clearance holes. Coaxial connectors are passivated stainless steel and solidly anchored into the body. Finish is chromate conversion per MIL-C-5541, Class 3 and paint is gray epoxy enamel

Data subject to change without notice

m·e·c
MICROWAVE ENGINEERING CORPORATION
1551 STREET, NORTH ANDOVER, MA 01845 • TEL (978) 685-2776 • FAX (978) 975-4363 • Website: www.microwaveeng.com • Email: sales@microwaveeng.com

DOUBLE-RIDGE WAVEGUIDE BROADWALL DIRECTIONAL COUPLERS

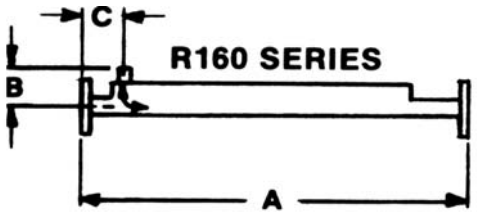

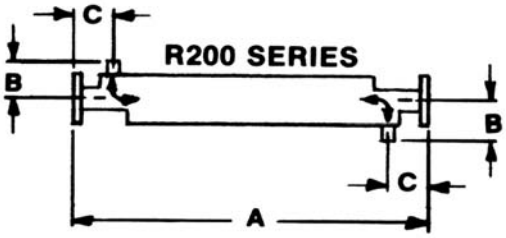

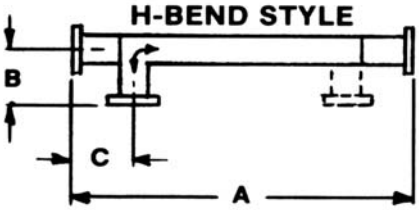

SPECIFICATIONS

Coupling: 10, 20, 30, 40, 50 dB
Frequency Sensitivity: ± 1.0 dB max,. (octave band)
Coupling Mean: ±0.8 dB

Mainline VSWR: 1.06 max.
Secondary VSWR: 1.35:1 max., coaxial
1.2:1 max., waveguide

MODEL NUMBER		FREQUENCY RANGE(GHz)	WAVEGUIDE SIZE	COUPLING	DIRECTIVITY		DIMENSIONS (Inches)			
SINGLE	DUAL				MIN	TYP	A 10, 20	A 30-50	B max	C
R165	R205	18.0 – 40.0	WRD-180C24	10-50	30	32	8.0	8.0	(1)	(1)
R165A	—			10,20	35		12.0		1.3	1.2
R166	R206	11.0 – 26.5	WRD-110C24	10-50	30	32	12.0	10.0	(1)	(1)
R166A	—			10,20	35		14.0		1.6	1.2
R160	R200	7.5 – 18.0	WRD-750D24	10-50	30	35	14.0	12.0		
R160A	—			10,20	38		21.0		1.2	1.4
R167	R207	6.5 –18.0	WRD-650D28	10-50	30	35	14.0	12.0		
R167A	—			10,20	38		21.0		1.2	1.4
R168	R208	5.8 – 16.0	WRD-580D28	10-50	30	35	18.0	14.0		
R168A	—			10,20	38		24.0		1.3	1.4
R161	R201	4.75 – 11.0	WRD-475D24	10-50	33	36	21.0	14.0		
R161A	—			10,20	40		36.0		1.3	1.8
R169	R209	4.8 – 11.0	DR19	10-50	33	36	21.0	14.0		
R169A	—			10,20	40		36.0		1.3	1.8
R162	R202	3.5 – 8.2	WRD350-D24	10-50	33	36	24.0	18.0		
R62A	—			10,20	40		36.0		1.6	1.9
R163	R203	2.0 – 4.8	WRD200-D24	10-50	33	36	36.0	28.0		
R163A	—			10,20	40		42.0		2.1	2.1

(1) 11-26.5 & 18-40 GHz couplers have H-Bend style secondaries.
(2) For dual 10 dB couplers, two single couplers are used back to back resulting in a length of 2A.

ORDERING INFORMATION

(1) Specify frequency limits if less than full band to obtain further optimization of specifications.
(2) Order by model number and add coupling level suffix as follows:
-10 for 10dB -20 for 20dB -30 for 30dB -40 for 40dB -50 for 50dB
(3) Specify suffix for secondary coaxial connector for all models (except 11-26.5 & 18-40 GHz) as follows:
-3 for SMA female -T for TNC female -N for type N female -7 for precision 7 mm
(4) H-Bend and other styles available on special request.

Data subject to change without notice

MICROWAVE ENGINEERING CORPORATION
1551 STREET, NORTH ANDOVER, MA 01845 • TEL (978) 685-2776 • FAX (978) 975-4363 • Website: www.microwaveeng.com • Email: sales@microwaveeng.com