Advanced Test Equipment Rentals
www.atecorp.com 800-404-ATEC (2832)

Instruction Manual

Tektronix

1101A, 1102 & 1103 Power Supplies

070-8276-02

Warning
The servicing instructions are for use by qualified personnel only. To avoid personal injury, do not perform any servicing unless you are qualified to do so. Refer to all safety summaries prior to performing service.

CE

Copyright © Tektronix, Inc. All rights reserved.

Tektronix products are covered by U.S. and foreign patents, issued and pending. Information in this publication supercedes that in all previously published material. Specifications and price change privileges reserved.

Printed in the U.S.A.

Tektronix, Inc., P.O. Box 1000, Wilsonville, OR 97070–1000

TEKTRONIX and TEK are registered trademarks of Tektronix, Inc.

WARRANTY

Tektronix warrants that the products that it manufactures and sells will be free from defects in materials and workmanship for a period of one (1) year from the date of shipment. If a product proves defective during this warranty period, Tektronix, at its option, either will repair the defective product without charge for parts and labor, or will provide a replacement in exchange for the defective product.

In order to obtain service under this warranty, Customer must notify Tektronix of the defect before the expiration of the warranty period and make suitable arrangements for the performance of service. Customer shall be responsible for packaging and shipping the defective product to the service center designated by Tektronix, with shipping charges prepaid. Tektronix shall pay for the return of the product to Customer if the shipment is to a location within the country in which the Tektronix service center is located. Customer shall be responsible for paying all shipping charges, duties, taxes, and any other charges for products returned to any other locations.

This warranty shall not apply to any defect, failure or damage caused by improper use or improper or inadequate maintenance and care. Tektronix shall not be obligated to furnish service under this warranty a) to repair damage resulting from attempts by personnel other than Tektronix representatives to install, repair or service the product; b) to repair damage resulting from improper use or connection to incompatible equipment; c) to repair any damage or malfunction caused by the use of non-Tektronix supplies; or d) to service a product that has been modified or integrated with other products when the effect of such modification or integration increases the time or difficulty of servicing the product.

THIS WARRANTY IS GIVEN BY TEKTRONIX IN LIEU OF ANY OTHER WARRANTIES, EXPRESS OR IMPLIED. TEKTRONIX AND ITS VENDORS DISCLAIM ANY IMPLIED WARRANTIES OF MERCHANTABILITY OR FITNESS FOR A PARTICULAR PURPOSE. TEKTRONIX' RESPONSIBILITY TO REPAIR OR REPLACE DEFECTIVE PRODUCTS IS THE SOLE AND EXCLUSIVE REMEDY PROVIDED TO THE CUSTOMER FOR BREACH OF THIS WARRANTY. TEKTRONIX AND ITS VENDORS WILL NOT BE LIABLE FOR ANY INDIRECT, SPECIAL, INCIDENTAL, OR CONSEQUENTIAL DAMAGES IRRESPECTIVE OF WHETHER TEKTRONIX OR THE VENDOR HAS ADVANCE NOTICE OF THE POSSIBILITY OF SUCH DAMAGES.

Contacting Tektronix

Product Support	For application-oriented questions about a Tektronix measurement product, call toll free in North America: 1-800-TEK-WIDE (1-800-835-9433 ext. 2400) 6:00 a.m. – 5:00 p.m. Pacific time
	Or contact us by e-mail: tm_app_supp@tek.com
	For product support outside of North America, contact your local Tektronix distributor or sales office.
Service Support	Contact your local Tektronix distributor or sales office. Or visit our web site for a listing of worldwide service locations.
	www.tektronix.com
For other information	In North America: 1-800-TEK-WIDE (1-800-835-9433) An operator will direct your call.
To write us	Tektronix, Inc. P.O. Box 1000 Wilsonville, OR 97070-1000

TABLE OF CONTENTS

GENERAL SAFETY SUMMARY iii

Chapter 1 DESCRIPTION

About This Manual 1-1
Product Description and Applications 1-2
1101A Accessory Power Supply 1-2
1102 Accessory Power Supply 1-3
1103 TEKPROBE Power Supply 1-4
Specifications 1-5
Power Cord Options 1-8

Chapter 2 OPERATION

Power Source Safety Summary 2-1
Line Voltage Fuse 2-2
Line Voltage Selector 2-2
Operator Information 2-3
Power Switch and Indicator 2-3
Probe Connection 2-3
1103 Offset Controls 2-5

WARNING

The following servicing instructions are for use only by qualified personnel. To avoid personnel injury, do not perform any servicing other than that contained in the operating instructions unless you are qualified to do so.

SERVICE SAFETY SUMMARY S–1

Chapter 3 MAINTENANCE AND ADJUSTMENT

Preventive Maintenance 3-1
Cleaning 3-1
Visual Inspection 3-2
Periodic Electrical Adjustment 3-2
Parts Replacement 3-3
Parts Ordering Information 3-3
Disassembly/Assembly 3-4
Top Cover Removal 3-4
Assembly and Component Removal 3-4
Line Voltage Wiring 3-4
Power Supply Adjustment 3-6
Test Equipment 3-6
Adjustment Procedure 3-6

TABLE OF CONTENTS (CONT.)

Chapter 4 REPLACEABLE ELECTRICAL PARTS

Chapter 5 SCHEMATIC DIAGRAMS AND CIRCUIT BOARD ILLUSTRATIONS

Chapter 6 REPLACEABLE MECHANICAL PARTS

CHANGE INFORMATION

LIST OF FIGURES

Figure 1-1 Front Panel of the 1101A Accessory Power Supply 1-2
Figure 1-2 Front Panel of the 1102 Accessory Power Supply 1-3
Figure 1-3 Front Panel of the 1103 TEKPROBE Power Supply 1-4
Figure 2-1 Front View of Output Pin Configuration for the 1101A, 1102, and 1103 2-4
Figure 3-1 Line Voltage Wiring 3-5
Figure 3-2 Test Point and Adjustment Locations 3-7

LIST OF TABLES

Table 1-1 Electrical Characteristics 1-5
Table 1–2 Certifications and Compliances 1–6a
Table 1-3 Physical Characteristics 1-7
Table 1-4 Instrument Power Cord Options 1-8
Table 3-1 Voltage Adjustment Limits 3-7

General Safety Summary

Review the following safety precautions to avoid injury and prevent damage to this product or any products connected to it. To avoid potential hazards, use this product only as specified.

Only qualified personnel should perform service procedures.

To Avoid Fire or Personal Injury

Use Proper Power Cord. Use only the power cord specified for this product and certified for the country of use.

Use Proper Voltage Setting. Before applying power, ensure that the line selector is in the proper position for the power source being used.

Connect and Disconnect Properly. Do not connect or disconnect probes or test leads while they are connected to a voltage source.

Connect and Disconnect Properly. Connect the probe output to the measurement instrument before connecting the probe to the circuit under test. Disconnect the probe input and the probe ground from the circuit under test before disconnecting the probe from the measurement instrument.

Ground the Product. This product is grounded through the grounding conductor of the power cord. To avoid electric shock, the grounding conductor must be connected to earth ground. Before making connections to the input or output terminals of the product, ensure that the product is properly grounded.

Observe All Terminal Ratings. To avoid fire or shock hazard, observe all ratings and markings on the product. Consult the product manual for further ratings information before making connections to the product.

Connect the ground lead of the probe to earth ground only.

Do not apply a potential to any terminal, including the common terminal, that exceeds the maximum rating of that terminal.

Do Not Operate Without Covers. Do not operate this product with covers or panels removed.

Use Proper Fuse. Use only the fuse type and rating specified for this product.

Avoid Exposed Circuitry. Do not touch exposed connections and components when power is present.

Do Not Operate With Suspected Failures. If you suspect there is damage to this product, have it inspected by qualified service personnel.

Do Not Operate in Wet/Damp Conditions.

Do Not Operate in an Explosive Atmosphere.

Keep Product Surfaces Clean and Dry.

Provide Proper Ventilation. Refer to the manual's installation instructions for details on installing the product so it has proper ventilation.

Symbols and Terms

Terms in this Manual. These terms may appear in this manual:

WARNING. *Warning statements identify conditions or practices that could result in injury or loss of life.*

CAUTION. *Caution statements identify conditions or practices that could result in damage to this product or other property.*

Terms on the Product. These terms may appear on the product:

DANGER indicates an injury hazard immediately accessible as you read the marking.

WARNING indicates an injury hazard not immediately accessible as you read the marking.

CAUTION indicates a hazard to property including the product.

Symbols on the Product. The following symbols may appear on the product:

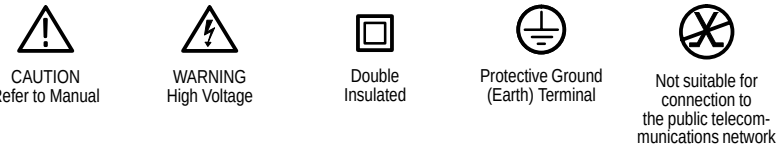

Chapter 1
DESCRIPTION

ABOUT THIS MANUAL

This manual provides both operator and service information for the Tektronix, Inc. 1101A/1102 Accessory Power Supplies and the 1103 TEKPROBE Power Supply. Operator and service information is presented as follows:

- Chapter 1 describes each product, lists product specifications, and describes optional power cords.
- Chapter 2 describes how to change the line voltage fuse, how to configure the supply for an alternate line voltage, and how to make the probe power connection.
- Chapter 3 provides general maintenance information and describes how to adjust the power supply voltages.
- Chapter 4 lists replaceable electrical parts.
- Chapter 5 contains detailed circuit diagrams.
- Chapter 6 lists replaceable mechanical parts and provides mechanical parts illustrations.

PRODUCT DESCRIPTION AND APPLICATIONS

The 1101A/1102 Accessory Power Supplies and 1103 TEKPROBE Power Supply provide external power to accessories and probes when the oscilloscope or other instrument does not have the capability to do so.

The power supply units are similar in design and function. They can operate at either 115 VAC or 230 VAC nominal voltage. Optional power cords are available to provide compatibility with different power source connections. All power supplies have overload protection. Each unit has a power switch on the rear panel and a power indicator on the front panel. The primary difference between the power units is that their front panels are designed for use with different specific probes. The following information describes the features and applications for each power supply product.

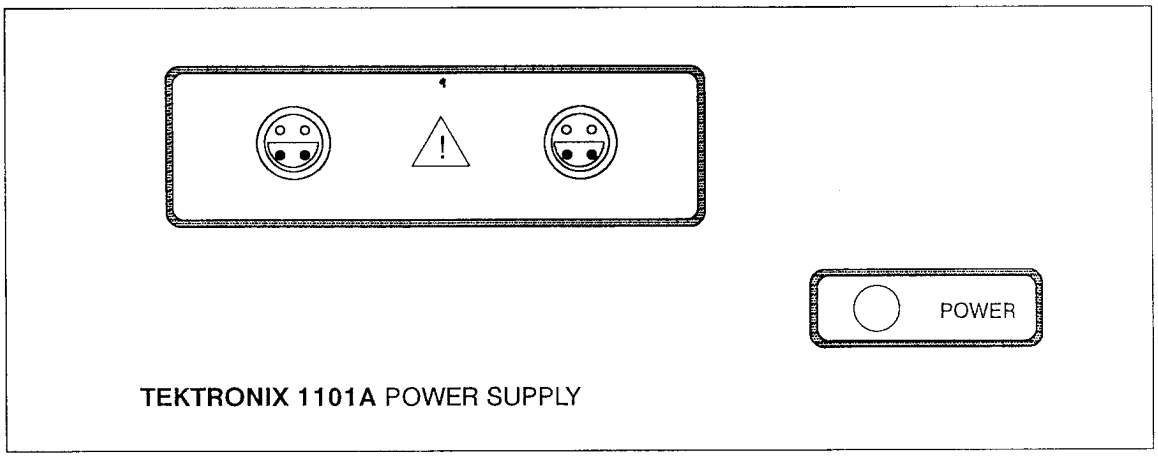

Figure 1-1. Front Panel of the 1101A Accessory Power Supply

1101A Accessory Power Supply

Figure 1-1 shows the 1101A front panel. The 1101A has two front panel power receptacles that will power up to two independent probes, such as the Tektronix P6201, P6202A, or P6230. The 1101A provides +5 VDC, +15 VDC, and −15 VDC at the probe connectors.

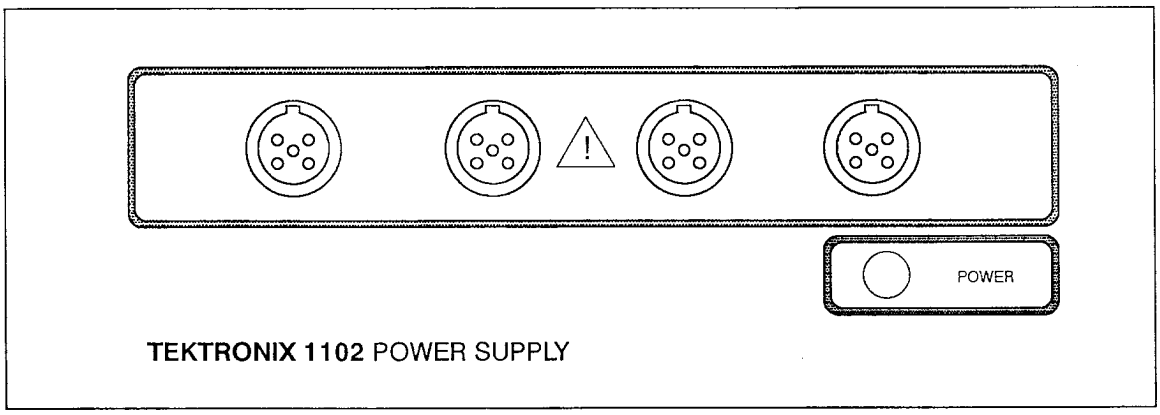

Figure 1-2. Front Panel of the 1102 Accessory Power Supply

1102 Accessory Power Supply

Figure 1-2 shows the 1102 front panel. The 1102 has four power receptacles that will power up to four independent probes, such as the Tektronix P6511 or P6515 spring contact probes. In addition, the 1102 will power the P6501 microprobe or the A6501 buffer amplifier when used with the appropriate power cord. The 1102 provides +5 VDC, -5 VDC, +15 VDC, and -15 VDC at the probe connectors.

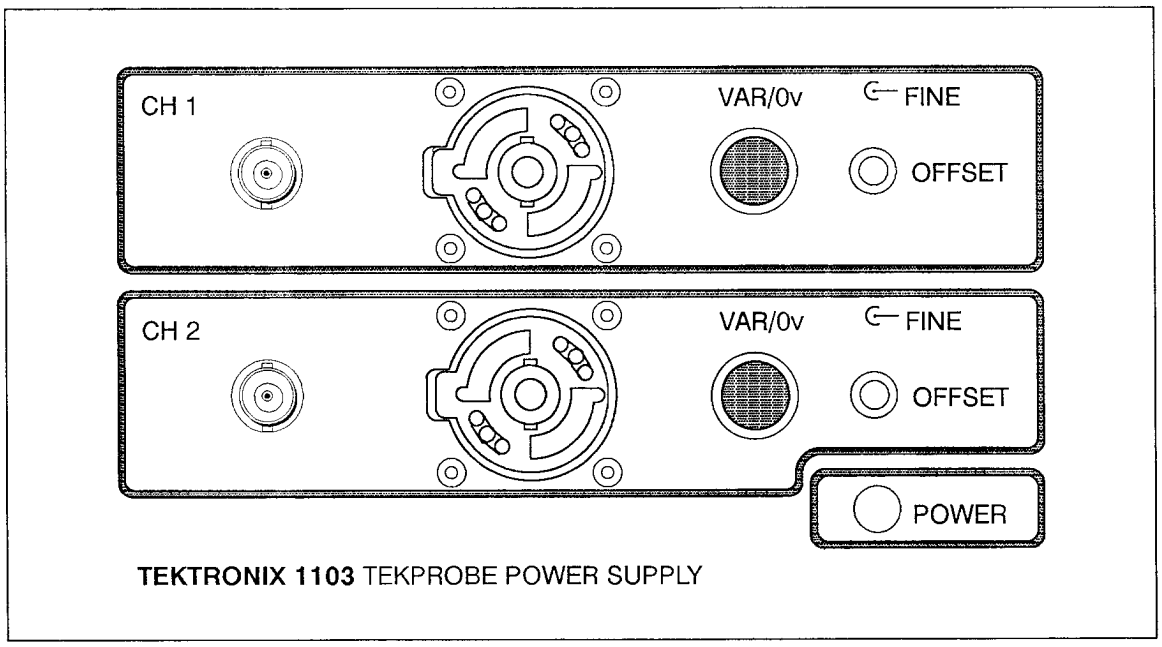

Figure 1-3. Front Panel of the 1103 TEKPROBE Power Supply

1103 TEKPROBE Power Supply

Figure 1-3 shows the 1103 front panel. The 1103 allows probes that need TEKPROBE interface power to be used with any oscilloscope or digitizer that does not provide TEKPROBE power. The 1103 has connections and offset controls for two probe channels. Each channel has a TEKPROBE connector (which combines power output and signal input), a BNC signal output connector, an offset enable switch (with LED), and fine and coarse controls. The offset controls enable the user to set an offset voltage for probes such as the Tektronix P6701, P6702, P6703 optical to electrical converters, and for active probes such as the Tektronix P6203, P6204, P6231, and P6501 Active Probes (when used with appropriate power cord). The 1103 provides +5 VDC, -5 VDC, +15 VDC, and -15 VDC at the probe connector.

SPECIFICATIONS

This section lists the electrical, environmental, and physical characteristics of the probe power supply units. Characteristics that differ among the three probe power supply units are as noted.

The electrical characteristics listed in Table 1-1 apply when an adjusted power supply is operating within the environmental conditions stated in Table 1-2.

Table 1-1
Electrical Characteristics

Characteristic	Information
Output Voltage	
+15 VDC	+15 VDC ±2%
-15 VDC	-15 VDC ±2%
+5 VDC	+5 VDC ±2%
-5 VDC	-5 VDC ±2%
Output Current	300 mA from each supply
Line Voltage	
Low Range	87 VAC to 128 VAC
High Range	174 VAC to 250 VAC
Line Frequency	48 to 440 Hz
Power Consumption	35 W
Line Fuse	
Low Range (115 VAC)	250 V, 0.4 A T/SB
High Range (230 VAC)	250 V, 0.20 A T/SB
1101A Output Configuration (see Fig. 2-1)	Lemo-type connector Pin 1: +5 VDC Pin 2: Common Pin 3: +15 VDC Pin 4: -15 VDC

Table 1-1
Electrical Characteristics (Cont.)

Characteristic	Information
1102 Output Configuration (see Fig. 2-1)	Pin 1: +15 VDC Pin 2: +5 VDC Pin 3: -5 VDC Pin 4: -15 VDC Pin 5: Common
1103 Output Configuration (see Fig. 2-1)	TEKPROBE connector Pin 1: no connection Pin 2: no connection Pin 3: +5 VDC Pin 4: +15 VDC Pin 5: Offset 1 V Pin 6: -5 VDC Pin 7: -15 VDC

Table 1–2: Certifications and compliances

Category	Standards or description	
EC Declaration of Conformity – EMC	Meets intent of Directive 89/336/EEC for Electromagnetic Compatibility. Compliance was demonstrated to the following specifications as listed in the Official Journal of the European Union:	
	EN 55011	Class B Radiated and Conducted Emissions
	EN 50081-1 Emissions:	
	EN 60555-2	AC Power Line Harmonic Emissions
	EN 50082-1 Immunity:	
	IEC 801-2	Electrostatic Discharge Immunity
	IEC 801-3	RF Electromagnetic Field Immunity
	IEC 801-4	Electrical Fast Transient/Burst Immunity
FCC Compliance	Emissions comply with FCC Code of Federal Regulations 47, Part 15, Subpart B, Class A Limits.	
Installation (Overvoltage) Category	Terminals on this product may have different installation (overvoltage) category designations. The installation categories are:	
	CAT III	Distribution-level mains (usually permanently connected). Equipment at this level is typically in a fixed industrial location.
	CAT II	Local-level mains (wall sockets). Equipment at this level includes appliances, portable tools, and similar products. Equipment is usually cord-connected.
	CAT I	Secondary (signal level) or battery operated circuits of electronic equipment.
Pollution Degree	A measure of the contaminates that could occur in the environment around and within a product. Typically the internal environment inside a product is considered to be the same as the external. Products should be used only in the environment for which they are rated.	
	Pollution Degree 1	No pollution or only dry, nonconductive pollution occurs. Products in this category are generally encapsulated, hermetically sealed, or located in clean rooms.
	Pollution Degree 2	Normally only dry, nonconductive pollution occurs. Occasionally a temporary conductivity that is caused by condensation must be expected. This location is a typical office/home environment. Temporary condensation occurs only when the product is out of service.
	Pollution Degree 3	Conductive pollution, or dry, nonconductive pollution that becomes conductive due to condensation. These are sheltered locations where neither temperature nor humidity is controlled. The area is protected from direct sunshine, rain, or direct wind.
	Pollution Degree 4	Pollution that generates persistent conductivity through conductive dust, rain, or snow. Typical outdoor locations.
Safety Standards		
U.S. Nationally Recognized Testing Laboratory Listing	UL1244	Standard for electrical and electronic measuring and test equipment.
Canadian Certification	CAN/CSA C22.2 No. 231	CSA safety requirements for electrical and electronic measuring and test equipment.
European Union Compliance	Low Voltage Directive 73/23/EEC, amended by 93/69/EEC	
	EN 61010-1	Safety requirements for electrical equipment for measurement, control, and laboratory use.

Table 1–2: Certifications and compliances (cont.)

Category	Standards or description	
Additional Compliance	IEC61010-1	Safety requirements for electrical equipment for measurement, control, and laboratory use.
Safety Certification Compliance		
Temperature, operating	+5 to +40° C	
Altitude (maximum operating)	2000 meters	
Equipment Type	Test and measuring	
Safety Class	Class 1 (as defined in IEC 1010-1, Annex H) – grounded product	
Overvoltage Category	Overvoltage Category II (as defined in IEC 1010-1, Annex J)	
Pollution Degree	Pollution Degree 2 (as defined in IEC 1010-1). Note: Rated for indoor use only.	

Table 1-3
Physical Characteristics

Characteristic	Information
Net Weight (1101A and 1102)	1.6 kg (3.5 lb)
Net Weight (1103)	1.8 kg (3.9 lb)
Length (1101A and 1102)	16.5 cm (6.5 in)
Length (1103)	17.8 cm (7.0 in)
Width	15.8 cm (6.2 in)
Height	8.9 cm (3.5 in)

POWER CORD OPTIONS

Table 1-4 lists the power cord options and shows their respective plug configurations.

Table 1-4
Instrument Power Cord Options

Plug Configuration	Usage (Max Rating)	Reference Standards & Certification	Option #
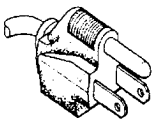	North American 125 V/6 A	[1]ANSI C73.11 [2]NEMA 5-15-P [3]IEC 83 [10]UL [11]CSA	Standard
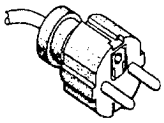	European 220 V/6 A	[3]ICE 83 [4]CEE (7), II, IV, VII [8]VDE [9]SEMKO	A1
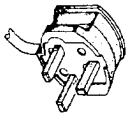	United Kingdom 240 V/6 A	[3]IEC 83 [5]BSI 1363	A2
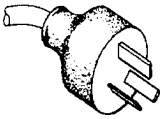	Australian 240 V/6 A	[6]AS C112 [12]ETSA	A3
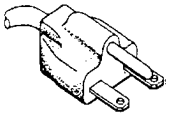	North American 250 V/10 A	[1]ANSI C73.20 [2]NEMA 6-15-P [3]IEC 83 [10]UL [11]CSA	A4
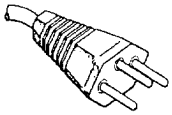	Switzerland 240 V/6 A	[7]SEV	A5

[1]*ANSI—American National Standards Institute*
[2]*NEMA—National Electrical Manufacturers' Association*
[3]*IEC—International Electrotechnical Commission*
[4]*CEE—International Commission on Rules for the Approval of Electrical Equipment*
[5]*BSI—British Standards Institute*
[6]*AS—Standards Association of Australia*
[7]*SEV—Schweizevischer Elektrotechischer Verein*
[8]*VDE—Verband Deutscher Elektrotechniker*
[9]*SEMKO—Swedish Institute for Testing and Approval of Electrical Equipment*
[10]*UL—Underwriters Laboratories*
[11]*CSA—Canadian Standards Association*
[12]*ETSA—Electricity Trust of South Australia*

Section 2
OPERATION

This chapter describes how to use the power supplies. Unless otherwise noted, information applies to all three versions of the power supply. Each supply is equipped with unique connectors to ensure that only certain probes can be connected to a specific supply unit. If in doubt about whether a probe and power supply are compatible, contact your Tektronix field representative.

This chapter provides information on the following subjects:

- Power source safety summary
- Line voltage fuse
- Line voltage selector
- Operator information

POWER SOURCE SAFETY SUMMARY

Read and comply with the following warning statements to ensure that equipment is operated in a safe manner to avoid equipment damage and personal injury.

WARNING

The 1101A/1102 Accessory Power Supplies and the 1103 TEKPROBE Power Supply are intended to operate from a power source that will not apply more than 250 V rms between the supply conductors or between either supply conductor and ground. A protective ground connection, by way of the grounding conductor in the power cord, is essential for safe operation.

Each power supply unit is grounded through the grounding conductor of the power cord. To avoid electrical shock, plug the power cord into a properly wired receptacle.

Upon loss of the protective ground connection, all accessible conductive parts (including knobs and controls that may appear to be insulating) can render an electrical shock.

WARNING

To avoid explosion, do not operate these products in an atmosphere of explosive gasses.

LINE VOLTAGE FUSE

The AC line voltage fuse is located inside the line input assembly on the rear panel. To access and change the line voltage fuse, perform the following steps:

1. Remove the power cord from the line input assembly on the rear panel.
2. Insert the tip of a small flat blade screwdriver in the small slot in the top edge of the plastic cover of the line input assembly.
3. Pry outward carefully to open the cover.
4. Use the tip of the screwdriver to pull the fuse holder (grey box with arrow) from the line input assembly.
5. Replace the fuse with one that conforms to the specifications below:

Low Range (115VAC)	3AG, 0.4 A, 250 VAC, SLOW BLOW
High Range (230VAC)	3AG, 0.20 A, 250 VAC, SLOW BLOW

6. Insert the fuse holder back into the AC receptacle and close the receptacle cover.

LINE VOLTAGE SELECTOR

Each power supply unit has a line voltage selector that is used to configure the power supply transformer to the customer's line voltage. Either a low range (115 VAC) or a high range (230 VAC) selection can be made. Usually, the power supply unit is configured at the factory and is provided with a power cord that is compatible with the customer's line voltage.

Before plugging in the power cord, check to ensure that you have the proper power cord and that the line voltage selector indicates the proper line voltage. The power supplies can be damaged when power is applied to an inappropriately configured power supply transformer.

The AC line voltage selector is located inside the AC receptacle on the rear panel. To change the line voltage selection, perform the following procedure:

1. Remove the power cord from the AC receptacle on the rear panel. Insert the tip of a small flat blade screwdriver in the small slot in the top edge of the plastic cover of the AC receptacle.

2. Pry outward carefully to open the receptacle cover.

3. Use your thumb or the tip of the screwdriver to rotate the selector drum to the alternative line voltage selection.

4. Close the receptacle cover.

OPERATOR INFORMATION

Information in this section describes the power switch and indicator, probe connection, and 1103 TEKPROBE Power Supply controls.

Power Switch and Indicator

A rocker-type power switch is located on the rear panel of all three power supply units. When the power is on, the POWER indicator on the front panel is lighted.

Probe Connection

The 1101A, 1102, and 1103 power supplies contain different front panel connectors that ensure only compatible probe power connectors can be connected to a specific power supply unit. Figure 2-1 shows the pin configuration for each power supply unit.

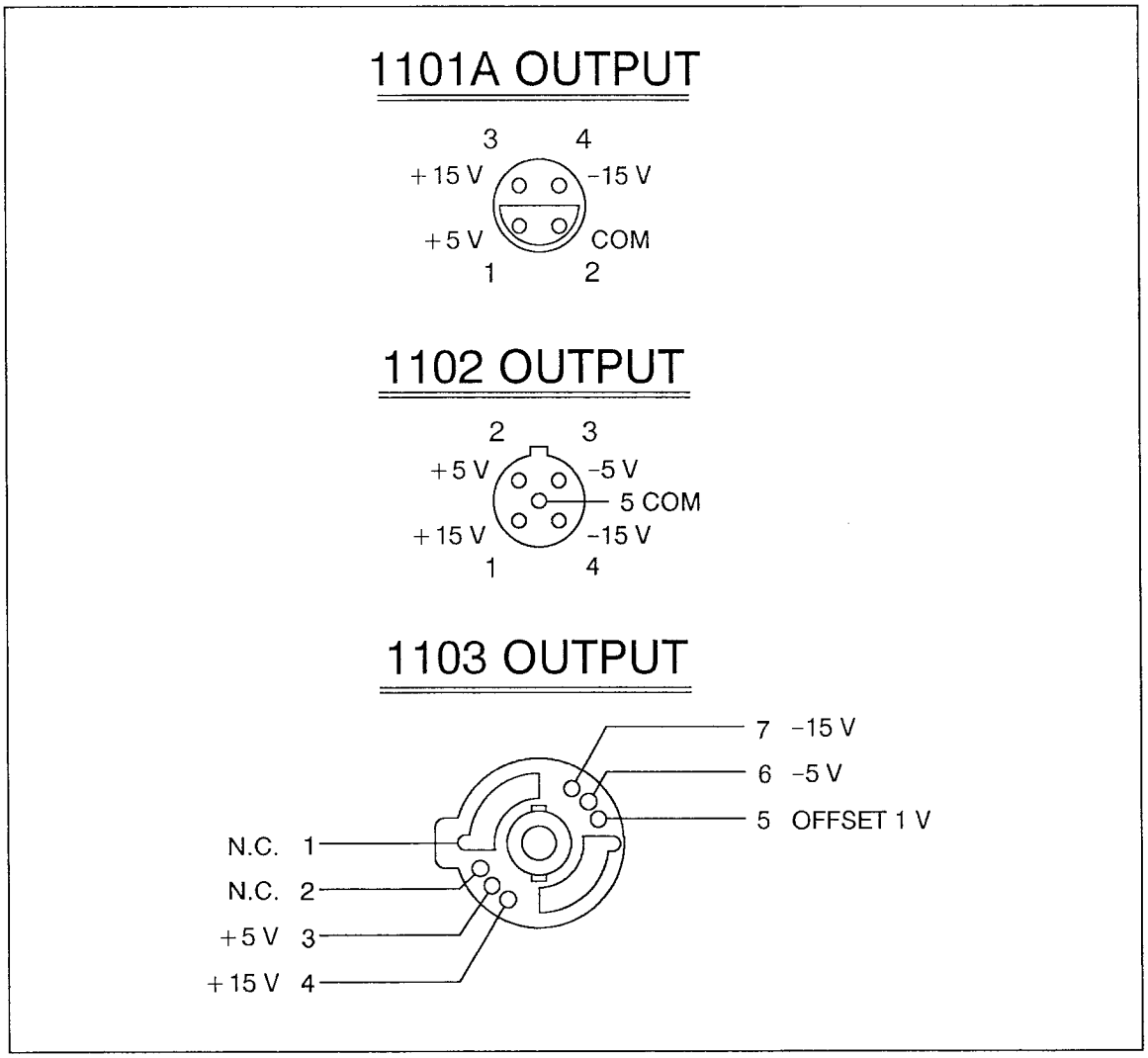

Figure 2-1. Front View of Output Pin Configuration for the 1101A, 1102, and 1103

For the 1101A and 1102 supplies, connect a probe to the desired input channel on the oscilloscope. Connect the probe power cord to any of the power connectors on the power supply front panel. Use the probe as described in the probe instruction manual.

For the 1103 supply, connect a TEKPROBE compatible probe to the CH 1 or CH 2 input of the power supply front panel.

NOTE

Before installing the probe on the 1103 TEKPROBE Power Supply, make sure the probe BNC shell is in the unlock position. The probe cannot be installed if the BNC shell is in the lock position.

Connect a 50 Ω BNC coax cable (or BNC cable with a 50 Ω terminator) between the CH 1 or CH 2 output connector and the respective input channel on the test oscilloscope. Use the probe as described in the probe instruction manual. Refer to "1103 Offset Controls" for information on applying a DC offset signal.

1103 Offset Controls

The 1103 contains a VAR/0V offset switch and coarse and fine adjustments on the front panel for each channel. These controls enable you to apply a DC offset from −1 VDC to +1 VDC to the probe offset circuitry. Each TEKPROBE has a different offset range capability. For further information, refer to the manual for the particular probe you are using.

The following describes the operation of the offset switches, indicators, and controls. Both channels function the same.

To apply a DC offset signal, press the VAR/0V switch. An indicator LED within the switch button lights when the offset feature is enabled. Adjust the OFFSET control to set the desired DC offset level.

Press the VAR/0V switch again to disable the offset feature. The DC offset voltage is disabled and the DC level is set to 0 V.

Warning

The following servicing instructions are for use only by qualified personnel. To avoid personnel injury, do not perform any servicing other than that contained in the operating instructions unless you are qualified to do so. Refer to General Safety Summary and Service Safety Summary prior to performing any service.

Service Safety Summary

Only qualified personnel should perform service procedures. Read this *Service Safety Summary* and the *General Safety Summary* before performing any service procedures.

Do Not Service Alone. Do not perform internal service or adjustments of this product unless another person capable of rendering first aid and resuscitation is present.

Disconnect Power. To avoid electric shock, switch off the instrument power, then disconnect the power cord from the mains power.

Use Care When Servicing With Power On. Dangerous voltages or currents may exist in this product. Disconnect power, remove battery (if applicable), and disconnect test leads before removing protective panels, soldering, or replacing components.

To avoid electric shock, do not touch exposed connections.

Section 3
MAINTENANCE AND ADJUSTMENT

This chapter contains information for performing preventive maintenance, corrective maintenance, disassembly/assembly, and adjustment of the 1101A/1102 Accessory Power supplies and the 1103 TEKPROBE Power Supply.

PREVENTIVE MAINTENANCE

Preventive maintenance performed regularly can prevent or forestall power supply breakdown and may improve supply reliability. The severity of the environment to which the power supply is subjected determines the frequency of maintenance.

Cleaning

The power supply should be cleaned as often as operating conditions require. An accumulation of dirt on components acts as an insulating blanket and prevents efficient heat dissipation, which can cause overheating and component breakdown. Dirt also provides an electrical conduction path that can result in electrical failure.

The covers in which the power supply circuits are installed reduce the amount of dust reaching the interior of the power supply. Keep the covers in place for safety and to keep electrical circuitry clean.

CAUTION

Avoid using chemical cleaning agents which might damage the materials used in the supply. Use only isopropyl alcohol or totally denatured ethyl alcohol. Before using any other type of cleaner, consult your Tektronix service center or representative.

Exterior

Remove dust accumulation on the outside of the power supply with a soft cloth or small brush.

Interior

Cleaning the interior of the power supply should seldom be necessary. The best way to clean the interior is to blow off any accumulated dust with dry, low-velocity air (such as from a vacuum cleaner exhaust). Use a soft brush to remove any dirt that remains. A cotton-tipped swab is useful for cleaning in narrow spaces or for cleaning more delicate circuit components.

Visual Inspection

The power supply should be inspected occasionally for loosely-seated or heat-damaged components. The corrective procedure for most visible defects is obvious. However, particular care must be taken if heat-damaged parts are found. Overheating usually indicates other problems in the power supply. Therefore, correct the cause of overheating to prevent recurrence of the damage.

Periodic Electrical Adjustment

To ensure accurate voltages, check the power supply voltages and adjust as needed after each 2,000 hours of operation or, if used infrequently, every 24 months. Refer to "Power Supply Adjustment" later in this chapter for adjustment procedures.

PARTS REPLACEMENT

There are two repair options you should consider:

1. Tektronix Repair. You may ship your supply to us for repair, after which we will return it to you.

2. On-site Repair. You may have us repair the power supply at your site, or you may choose to repair the power supply yourself. In the latter case, you may troubleshoot the replacement part needed using the schematics and Replaceable Electrical Parts list and then order the part number from your local Tektronix service center or field representative.

Refer to Chapter 6: Replaceable Mechanical Parts for a complete listing of all replaceable mechanical parts and assemblies that can be ordered from Tektronix for the 1101A, 1102, and 1103 Power Supplies.

Parts Ordering Information

Changes to Tektronix instruments are sometimes made to accommodate improved components as they become available and to give you the benefit of the latest circuit improvements. Therefore, when ordering parts, it is important to include the following information in your order:

- Part number
- Instrument type or model number
- Instrument serial number
- Instrument modification number, if applicable

If a part you order has been replaced with a different or improved part, your local Tektronix service center or field representative will contact you concerning any change in the part number.

Change information, if any, is located at the rear of this manual.

DISASSEMBLY/ASSEMBLY

WARNING

Dangerous voltages exist at several places in the power supplies. To avoid electric shock hazard, disconnect the power cord before removing the top cover or replacing components.

Top Cover Removal

To remove the top cover, remove the two screws on the left and right of the bottom cover. You can then lift the top cover from the power supply.

Assembly and Component Removal

The design of the power supply is relatively simple. To aid disassembly and assembly refer to the mechanical drawings included with Chapter 6: Replaceable Mechanical Parts.

Line Voltage Wiring

Figure 3-1 shows the wiring and solder connections for the AC line receptacle, transformer, and power switch. Reference this drawing to ensure proper wire connections in the event any of the line voltage components are replaced.

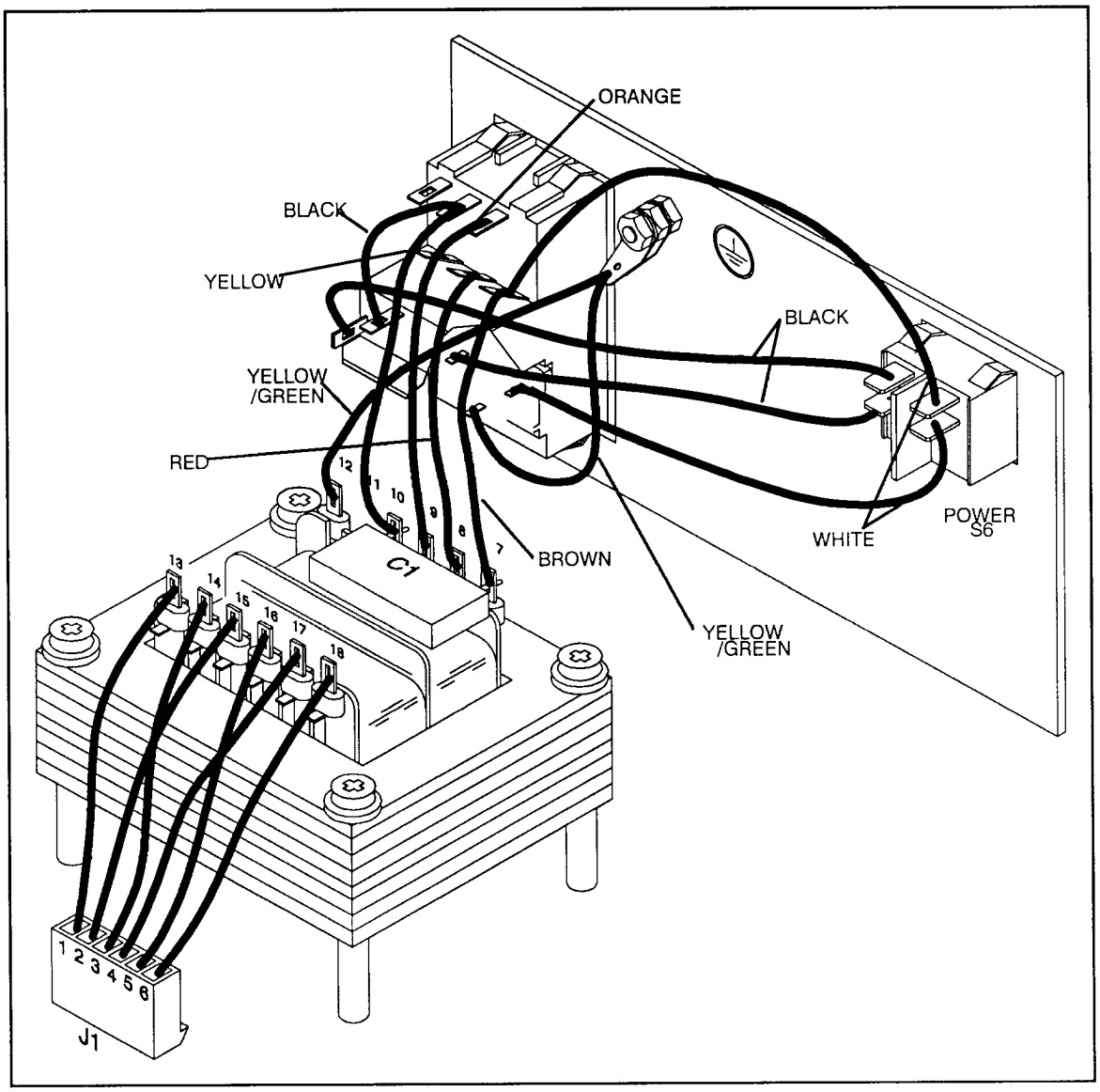

Figure 3-1. Line Voltage Wiring

POWER SUPPLY ADJUSTMENT

The power supply units contain adjustments for the individual +5 VDC, -5 VDC (1102 and 1103 only), +15 VDC, and -15 VDC supplies.

Allow the power supply to warm up for at least 15 minutes before adjusting any power supply voltage.

Test Equipment

To perform this adjustment procedure, you need the following test equipment:

- Digital Multimeter with test leads (Fluke 8824A or equivalent with an accuracy of ±0.01%)

Adjustment Procedure

Perform the following steps to check and adjust the individual power supply voltages.

1. Turn off the power and remove the power cord from the power receptacle on the rear of the power supply unit.

2. Remove the two screws on the left and right side of the bottom cover and remove the top cover.

WARNING

Lethal line voltage potentials are exposed at various transformer and POWER switch terminals when the top cover is removed and the power cord is installed. To avoid personal injury or death, do not touch exposed connections and components while the power cord is attached. Also, do not touch exposed connections and components when the power is on.

Do not service alone. Do not perform internal service or adjustment of this product unless another person capable of rendering first aid and resuscitation is present.

3. Install the power cord and press the power switch to the ON position. Refer to Figure 3-2 for test point and adjustment locations.

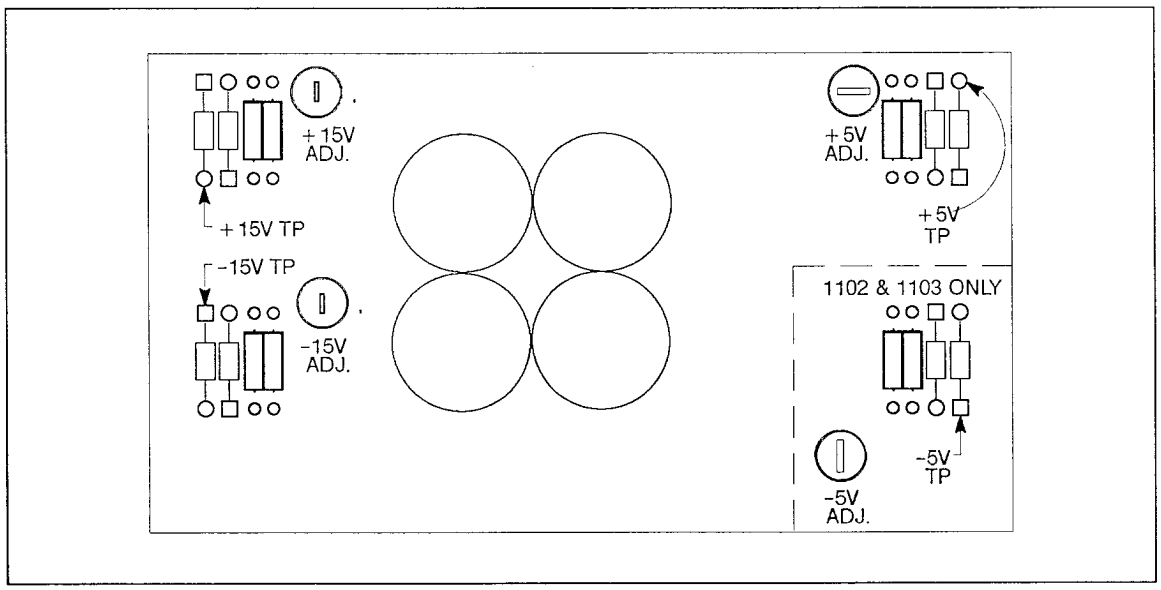

Figure 3-2. Test Point and Adjustment Locations

Table 3-1
Voltage Adjustment Limits

Voltage	Test Point	Recommended Adjustment Deviation Limits (V)
+5 VDC	+5 V	+4.99 to +5.01
-5 VDC (1102 and 1103)	-5 V	-4.99 to -5.01
+15 VDC	+15 V	+14.97 to +15.03
-15 VDC	-15	-14.97 to -15.03

4. Connect the digital multimeter to the +5 V test point on the Power Supply board.

5. Examine the multimeter reading at the +5 V test point and adjust to within the recommended adjustment deviation limits given in Table 3-1. Adjustment within these limits assures that the output voltage will remain within the range specified in Table 1-1 over time and for the environmental conditions specified in Table 1-2.

6. Repeat steps 4 and 5 for each remaining voltage listed in Table 3-1.

Section 4
REPLACEABLE ELECTRICAL PARTS

Parts Ordering Information

Replacement parts are available from or through your local Tektronix, Inc. Field Office or representative.

When ordering parts, include the following information in your order: part number, instrument type or number, serial number, and modification number if applicable.

If a part you have ordered has been replaced with a new or improved part, your local Tektronix, Inc. Field Office or representative will contact you concerning any change in part number.

Change information, if any, is located at the rear of this manual.

List of Assemblies

A list of assemblies can be found at the beginning of the electrical parts list. The assemblies are listed in numerical order. When the complete component number of a part is known, this list will identify the assembly in which the part is located.

Cross Index-Mfr. Code Number to Manufacturer

The Mfg. Code Number to Manufacturer Cross Index for the electrical parts list is located immediately after this page. The cross index provides codes, names, and addresses of manufacturers of components listed in the electrical parts list.

Component Number (column one of the parts list)

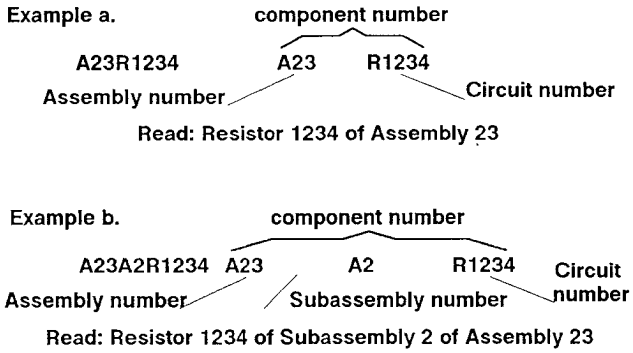

The circuit component's number appears on the diagrams and circuit board illustrations. Each diagram and circuit board illustration is clearly marked with the assembly number. Assembly numbers are also marked on the mechanical exploded views located in the mechanical parts list. The component number is obtained by adding the assembly number prefix to the circuit number.

The electrical parts list is divided and arranged by assemblies in numerical sequence (e.g., assembly A1 with its subassemblies and parts, precedes assembly A2 with its subassemblies and parts).

Chassis-mounted parts have no assembly number prefix and are located at the end of the electrical parts list.

Tektronix Part No. (column two of the parts list)

Indicates part number to be used when ordering replacement part from Tektronix.

Serial No. (columns three and four of the parts list)

Column three (3) indicates the serial number at which the part was first used. Column four (4) indicates the serial number at which the part was removed. No serial number entered indicates part is good for all serial numbers.

Name & Description (column five of the parts list)

In the parts list, an item name is separated from the description by a colon (:). Because of space limitations, an item name may sometimes appear as incomplete. For further item name identification, the U.S. Federal Catalog handbook H6-1 can be utilized where possible.

Mfr. Code (column six of the parts list)

Indicates the code number of the actual manufacturer of the part. (Code to name and address cross reference can be found immediately after this page.)

Mfr. Part No. (column seven of the parts list)

Indicates actual manufacturer's part number.

Abbreviations

Abbreviations conform to American National Standard Y1.1.

CROSS INDEX - MFR. CODE NUMBER TO MANUFACTURER

Mfr. Code	Manufacturer	Address	City, State, Zip Code
00779	AMP INC	2800 FULLING MILL PO BOX 3608	HARRISBURG PA 17105
04222	AVX CERAMICS DIV OF AVX CORP	19TH AVE SOUTH P O BOX 867	MYRTLE BEACH SC 29577
04713	MOTOROLA INC SEMICONDUCTOR PRODUCTS SECTOR	5005 E MCDOWELL RD	PHOENIX AZ 85008-4229
05828	GENERAL INSTRUMENT CORP GOVERNMENT SYSTEMS DIV	600 W JOHN ST	HICKSVILLE NY 11802
24165	SPRAGUE ELECTRIC CO	267 LOWELL ROAD	HUDSON NH 03051
27014	NATIONAL SEMICONDUCTOR CORP	2900 SEMICONDUCTOR DR	SANTA CLARA CA 95051-0606
55680	NICHICON /AMERICA/ CORP	927 E STATE PKY	SCHAUMBURG IL 60195-4526
58050	TEKA PRODUCTS INC	45 SALEM ST	PROVIDENCE RI 02907
71400	BUSSMANN DIV OF COOPER INDUSTRIES INC	114 OLD STATE RD PO BOX 14460	ST LOUIS MO 63178
80009	TEKTRONIX INC	14150 SW KARL BRAUN DR PO BOX 500	BEAVERTON OR 97077-0001
D5243	ROEDERSTEIN E SPEZIALFABRIK FUER KONDENSATOREN GMBN	LUDMILLASTRASSE 23-25	8300 LANDSHUT GERMANY
TK0935	MARQUARDT SWITCHES INC		

Component No.	Tektronix Part No.	Serial/Assembly No. Effective	Dscont	Name & Description	Mfr. Code	Mfr. Part No.
A1	671-0711-01			CIRCUIT BD ASSY:1102,1103 POWER SUPPLY (1102 & 1103 ONLY)	80009	671-0711-01
A1	671-2137-00			CIRCUIT BD ASSY:POWER SUPPLY;;389-0947-XX W IRED (1101A ONLY)	80009	671-2137-00
A2	671-0783-00	B010200	B010249	CIRCUIT BD ASSY:1103 INTERFACE (1103 ONLY)	80009	671-0783-00
A2	671-0783-01	B010250		CIRCUIT BD ASSY:INTERFACE;;389-0096-XX WIRE D,1103 (1103 ONLY)	80009	671-0783-01
A3	----- -----			CONN BODY,RCPT:(SEE FIG.1-53 RMPL)		
A1	671-0711-01			CIRCUIT BD ASSY:1102,1103 POWER SUPPLY (1102 & 1103 ONLY)	80009	671-0711-01
A1	671-2137-00			CIRCUIT BD ASSY:POWER SUPPLY;;389-0947-XX W IRED (1101A ONLY)	80009	671-2137-00
A1C1	290-0916-00			CAP,FXD,ELCTLT:2200UF,+50-20%,35WVDC	55680	ULB1V222MRA
A1C2	290-0916-00			CAP,FXD,ELCTLT:2200UF,+50-20%,35WVDC (1102 & 1103 ONLY)	55680	ULB1V222MRA
A1C3	290-0745-00			CAP,FXD,ELCTLT:22UF,+50-20%,25WVDC	24165	513D226M063BB4
A1C4	290-0745-00			CAP,FXD,ELCTLT:22UF,+50-20%,25WVDC	24165	513D226M063BB4
A1C5	290-0916-00			CAP,FXD,ELCTLT:2200UF,+50-20%,35WVDC	55680	ULB1V222MRA
A1C6	290-0745-00			CAP,FXD,ELCTLT:22UF,+50-20%,25WVDC	24165	513D226M063BB4
A1C7	290-0745-00			CAP,FXD,ELCTLT:22UF,+50-20%,25WVDC	24165	513D226M063BB4
A1C8	290-0916-00			CAP,FXD,ELCTLT:2200UF,+50-20%,35WVDC	55680	ULB1V222MRA
A1C9	290-0745-00			CAP,FXD,ELCTLT:22UF,+50-20%,25WVDC	24165	513D226M063BB4
A1C10	290-0745-00			CAP,FXD,ELCTLT:22UF,+50-20%,25WVDC	24165	513D226M063BB4
A1C11	290-0745-00			CAP,FXD,ELCTLT:22UF,+50-20%,25WVDC (1102 & 1103 ONLY)	24165	513D226M063BB4
A1C12	290-0745-00			CAP,FXD,ELCTLT:22UF,+50-20%,25WVDC (1102 & 1103 ONLY)	24165	513D226M063BB4
A1C21	290-0916-00			CAP,FXD,ELCTLT:2200UF,+50-20%,35WVDC (1101A ONLY)	55680	ULB1V222MRA
A1CR1	152-0488-00			DIODE,RECT:,;BRIDGE,200V,1.5A;2KBP02M	80009	152-0488-00
A1CR2	152-0488-00			DIODE,RECT:,;BRIDGE,200V,1.5A;2KBP02M	80009	152-0488-00
A1CR3	152-0066-00			DIODE,RECT:,;400V,1A,30A IFSM;GP10G,DO-41,T R	05828	GP10G-020
A1CR4	152-0066-00			DIODE,RECT:,;400V,1A,30A IFSM;GP10G,DO-41,T R	05828	GP10G-020
A1CR5	152-0066-00			DIODE,RECT:,;400V,1A,30A IFSM;GP10G,DO-41,T R	05828	GP10G-020
A1CR6	152-0066-00			DIODE,RECT:,;400V,1A,30A IFSM;GP10G,DO-41,T R	05828	GP10G-020
A1CR7	152-0066-00			DIODE,RECT:,;400V,1A,30A IFSM;GP10G,DO-41,T R	05828	GP10G-020
A1CR8	152-0066-00			DIODE,RECT:,;400V,1A,30A IFSM;GP10G,DO-41,T R	05828	GP10G-020
A1CR9	152-0066-00			DIODE,RECT:,;400V,1A,30A IFSM;GP10G,DO-41,T R (1102 & 1103 ONLY)	05828	GP10G-020
A1CR10	152-0066-00			DIODE,RECT:,;400V,1A,30A IFSM;GP10G,DO-41,T R (1102 & 1103 ONLY)	05828	GP10G-020
A1DS1	150-1223-00			LT EMITTING DIO:GREEN,560NM,10MA	80009	150-1223-00
A1J1	131-4400-00			CONN,HDR PWR:	80009	131-4400-00
A1J2	131-4401-00	B010135	B010155	CONN,RCPT,ELEC:HEADER,5 PIN,0.1 CTR (1102 ONLY)	80009	131-4401-00

Component No.	Tektronix Part No.	Serial/Assembly No. Effective	Dscont	Name & Description	Mfr. Code	Mfr. Part No.
A1J2	131-4553-00	B010156		CONN,HDR::PCB,;MALE,RTANG,1 X 5,0.1 CTR,0.235 MLG X 0.110 TAIL,30 GOLD;,, (1102 ONLY)	80009	131-4553-00
A1J2	131-4401-00	B010200	B010249	CONN,RCPT,ELEC:HEADER,5 PIN,0.1 CTR (1103 ONLY)	80009	131-4401-00
A1J2	131-4553-00	B010250		CONN,HDR::PCB,;MALE,RTANG,1 X 5,0.1 CTR,0.235 MLG X 0.110 TAIL,30 GOLD;,, (1103 ONLY)	80009	131-4553-00
A1J3	131-3006-00			CONN,HDR:: (1101A ONLY)	80009	131-3006-00
A1J4	131-3006-00			CONN,HDR:: (1101A ONLY)	80009	131-3006-00
A1R1	315-0121-00			RES,FXD,FILM:120 OHM,5%,0.25W	80009	315-0121-00
A1R2	315-0301-00			RES,FXD,FILM:300 OHM,5%,0.25W	80009	315-0301-00
A1R3	311-0622-00			RES,VAR,NONWW:TRMR,100 OHM,0.5W	80009	311-0622-00
A1R4	315-0471-00			RES,FXD,FILM:470 OHM,5%,0.25W	80009	315-0471-00
A1R5	315-0121-00			RES,FXD,FILM:120 OHM,5%,0.25W	80009	315-0121-00
A1R6	315-0122-00			RES,FXD,FILM:1.2K OHM,5%,0.25W	80009	315-0122-00
A1R7	311-0634-00			RES,VAR,NONWW:TRMR,500 OHM,0.5W	80009	311-0634-00
A1R8	311-0634-00			RES,VAR,NONWW:TRMR,500 OHM,0.5W	80009	311-0634-00
A1R9	315-0122-00			RES,FXD,FILM:1.2K OHM,5%,0.25W	80009	315-0122-00
A1R10	315-0121-00			RES,FXD,FILM:120 OHM,5%,0.25W	80009	315-0121-00
A1R11	311-0622-00			RES,VAR,NONWW:TRMR,100 OHM,0.5W (1102 & 1103 ONLY)	80009	311-0622-00
A1R12	315-0301-00			RES,FXD,FILM:300 OHM,5%,0.25W (1102 & 1103 ONLY)	80009	315-0301-00
A1R13	315-0121-00			RES,FXD,FILM:120 OHM,5%,0.25W (1102 & 1103 ONLY)	80009	315-0121-00
A1U1	156-1161-00			IC,LINEAR:BIPOLAR,VOLTAGE REGULATOR;POSITIVE,ADJUSTABLE,1.5A,4%;LM317T,TO-220	04713	LM317T
A1U2	156-1161-00			IC,LINEAR:BIPOLAR,VOLTAGE REGULATOR;POSITIVE,ADJUSTABLE,1.5A,4%;LM317T,TO-220	04713	LM317T
A1U3	156-1451-00			IC,LINEAR:BIPOLAR,VOLTAGE REGULATOR;NEGATIVE,ADJUSTABLE,1.5A,4%;LM337T,TO-220	80009	156-1451-00
A1U4	156-1451-00			IC,LINEAR:BIPOLAR,VOLTAGE REGULATOR;NEGATIVE,ADJUSTABLE,1.5A,4%;LM337T,TO-220 (1102 & 1103 ONLY)	80009	156-1451-00
A2	671-0783-00	B010200	B010249	CIRCUIT BD ASSY:1103 INTERFACE (1103 ONLY)	80009	671-0783-00
A2	671-0783-01	B010250		CIRCUIT BD ASSY:INTERFACE;;389-0096-XX WIRED,1103 (1103 ONLY)	80009	671-0783-01
A2C1	281-0775-01			CAP,FXD,CER DI:0.1UF,20%,50V	04222	SA105E104MAA
A2C2	281-0775-01			CAP,FXD,CER DI:0.1UF,20%,50V	04222	SA105E104MAA
A2J1	131-3798-00			CONN,BOX:	00779	643107-1
A2J2	131-3798-00			CONN,BOX:	00779	643107-1
A2J3	131-1857-00	B010250		CONN,HDR:PCB,;MALE,STR,1 X 36,0.1 CTR,0.230 MLG X 0.100 TAIL,GOLD;,,	58050	082-3644-SS10
A2R10	315-0822-00			RES,FXD,FILM:8.2K OHM,5%,0.25W	80009	315-0822-00
A2R11	315-0104-00			RES,FXD,FILM:100K OHM,5%,0.25W	80009	315-0104-00
A2R12	315-0154-00			RES,FXD,FILM:150K OHM,5%,0.25W	80009	315-0154-00
A2R13	315-0331-00			RES,FXD,FILM:330 OHM,5%,0.25W	80009	315-0331-00
A2R14	315-0152-00			RES,FXD,FILM:1.5K OHM,5%,0.25W	80009	315-0152-00
A2R20	315-0822-00			RES,FXD,FILM:8.2K OHM,5%,0.25W	80009	315-0822-00
A2R21	315-0104-00			RES,FXD,FILM:100K OHM,5%,0.25W	80009	315-0104-00
A2R22	315-0154-00			RES,FXD,FILM:150K OHM,5%,0.25W	80009	315-0154-00
A2R23	315-0331-00			RES,FXD,FILM:330 OHM,5%,0.25W	80009	315-0331-00
A2R24	315-0152-00			RES,FXD,FILM:1.5K OHM,5%,0.25W	80009	315-0152-00
A2S1	260-2439-00	B010200	B010249	SWITCH,PUSH:DPDT,CIRCUIT BOARD	80009	260-2439-00
A2S1	260-2560-00	B010250		SWITCH,PUSH:SPDT,IA,125 VAC,ON/ON	80009	260-2560-00

Component No.	Tektronix Part No.	Serial/Assembly No. Effective	Dscont	Name & Description	Mfr. Code	Mfr. Part No.
A2S2	260-2439-00	B010200	B010249	SWITCH,PUSH:DPDT,CIRCUIT BOARD	80009	260-2439-00
A2S2	260-2560-00	B010250		SWITCH,PUSH:SPDT,IA,125 VAC,ON/ON	80009	260-2560-00
A2VR10	156-3019-00			IC,LINEAR:BIPOLAR,VOLTAGE REFERENCE;1.235V, 1.0%,150PPM,SHUNT,MICROPOWER;LM385BZ-1.2,TO -92	27014	LM385BZ-1.2
A2VR20	156-3019-00			IC,LINEAR:BIPOLAR,VOLTAGE REFERENCE;1.235V, 1.0%,150PPM,SHUNT,MICROPOWER;LM385BZ-1.2,TO -92	27014	LM385BZ-1.2
A3	----- -----			CONN BODY,RCPT:(SEE FIG.1-53 RMPL)		
C1	285-1252-00			CAP,FXD,PLASTIC:0.15UF,10%,250VAC	D5243	F1772-415-2000
F1	159-0032-00	B010100	B102050	FUSE,CARTRIDGE:3AG,0.5A,250V,SLOW BLOW (1101A ONLY-STANDARD ONLY)	71400	MDL 1/2
F1	159-0031-00	B102051		FUSE,CARTRIDGE:3AG,0.4A,250V,SLOW BLOW (1101A ONLY-STANDARD ONLY)	71400	MDL 4/10
F1	159-0187-00	B010100	B102050	FUSE,CARTRIDGE:3AG,0.25A,250VAC,SLOW BLO (1101A ONLY-OPTIONS A1 THRU A5 ONLY)	71400	MDA .250
F1	159-0044-00	B102051		FUSE,CARTRIDGE:3AG,0.2A,250V,20SEC (1101A ONLY-OPTIONS A1 THRU A5 ONLY)	71400	MDL 2/10
F1	159-0032-00	B010100	B010300	FUSE,CARTRIDGE:3AG,0.5A,250V,SLOW BLOW (1102 ONLY-STANDARD ONLY)	71400	MDL 1/2
F1	159-0031-00	B010301		FUSE,CARTRIDGE:3AG,0.4A,250V,SLOW BLOW (1102 ONLY-STANDARD ONLY)	71400	MDL 4/10
F1	159-0187-00	B010100	B010300	FUSE,CARTRIDGE:3AG,0.25A,250VAC,SLOW BLO (1102 ONLY-OPTIONS A1 THRU A5 ONLY)	71400	MDA .250
F1	159-0044-00	B010301		FUSE,CARTRIDGE:3AG,0.2A,250V,20SEC (1102 ONLY-OPTION A1 THRU A5 ONLY)	71400	MDL 2/10
F1	159-0032-00	B010100	B010699	FUSE,CARTRIDGE:3AG,0.5A,250V,SLOW BLOW (1103 ONLY-STANDARD ONLY)	71400	MDL 1/2
F1	159-0031-00	B010700		FUSE,CARTRIDGE:3AG,0.4A,250V,SLOW BLOW (1103 ONLY-STANDARD ONLY)	71400	MDL 4/10
F1	159-0187-00	B010100	B010699	FUSE,CARTRIDGE:3AG,0.25A,250VAC,SLOW BLO (1103 ONLY-OPTIONS A1 THRU A5 ONLY)	71400	MDA .250
F1	159-0044-00	B010700		FUSE,CARTRIDGE:3AG,0.2A,250V,20SEC (1103 ONLY-OPTIONS A1 THRU A5 ONLY)	71400	MDL 2/10
R110	311-2305-00			RES,VAR,NONWW:PNL,10K OHM X 10K OHM	80009	311-2305-00
R111	----- -----			(PART OF R110)		
R120	311-2305-00			RES,VAR,NONWW:PNL,10K OHM X 10K OHM	80009	311-2305-00
R121	----- -----			(PART OF R120)		
S6	260-1961-00			SWITCH,ROCKER:DPST,6(4)A,250V	TK0935	1802.1121
T1	120-1873-00	B010100	B102050	XFMR,PWR,STPDN:48 TO 440HZ (1101A ONLY)	80009	120-1873-00
T1	120-1898-00	B102051		XFMR,PWR,STPDN:48 TO 440HZ (1101A ONLY)	80009	120-1898-00
T1	120-1873-00	B010100	B010300	XFMR,PWR,STPDN:48 TO 440HZ (1102 ONLY)	80009	120-1873-00
T1	120-1898-00	B010301		XFMR,PWR,STPDN:48 TO 440HZ (1102 ONLY)	80009	120-1898-00
T1	120-1873-00	B010100	B010699	XFMR,PWR,STPDN:48 TO 440HZ (1103 ONLY)	80009	120-1873-00
T1	120-1898-00	B010700		XFMR,PWR,STPDN:48 TO 440HZ (1103 ONLY)	80009	120-1898-00

Section 5
SCHEMATIC DIAGRAMS AND CIRCUIT BOARD ILLUSTRATIONS

Symbols

Graphic symbols and class designation letters are based on ANSI Standard Y32.2-1975.

Logic symbols are based on ANSI/IEEE Std. 91-1984 in terms of positive logic. Logic symbols depict the logic function performed and may differ from the manufacturer's data.

Abbreviations are based on ANSI Y1.1-1972.

Other ANSI standards that are used in the preparation of diagrams by Tektronix are:

Y14.15, 1966	Drafting Practices.
Y14.2, 1973	Line Conventions and Lettering.
Y10.5, 1968	Letter Symbols for Quantities Used in Electrical Science and Electrical Engineering.

Component Values

Electrical components shown on the diagrams are in the following units unless noted otherwise:

Capacitors	Values one or greater are in picofarads (pF). Values less than one are in microfarads (μF).
Resistors	Ohms (Ω).

The Information and special symbols below may appear in this manual.

Assembly Numbers and Grid Coordinates

Each assembly in the instrument is assigned an assembly number (e.g., A2). The assembly number appears on the circuit board outline on the diagram, in the title for the circuit board component location illustration, and in the lookup table (if provided) for the schematic diagram and corresponding component locator illustration. The Replaceable Electrical Parts list is arranged by assemblies in the numerical sequence; the components are listed by component number.

The schematic diagram and circuit board component location illustration usually have grids. Complex schematics and circuit boards will be supported with a lookup table that uses the grid coordinates for ease of locating the component.

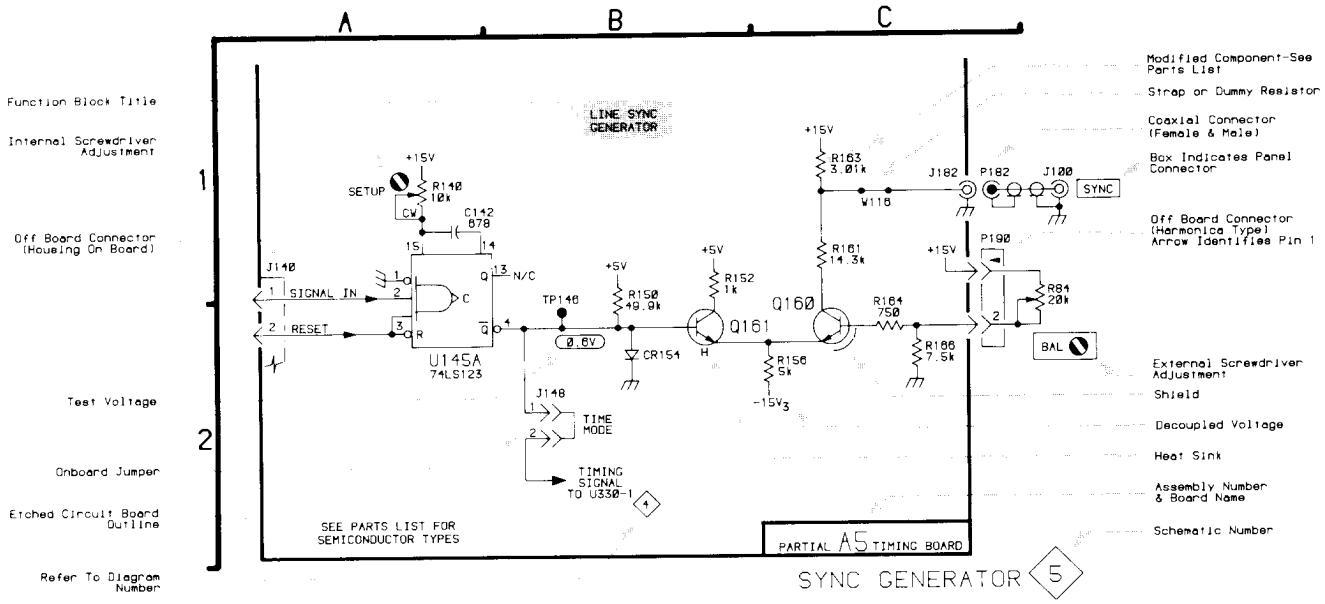

1 OF 1

PLEASE INSERT 2 FOLDED
11 X 24 DIAGRAM(S) HERE

PART NUMBER: 070-8276-00 DATE: 12-28-93

		TAB	PLEXFILE F	PLEXFILE *B
1	A1 * BLANK	A	1	
2	A2 * BLANK	B	2	
3				
4				
5				
6				
7				
8				
9				
10				
11				
12				
13				
14				
15				
16				
17				
18				

Section 6
REPLACEABLE MECHANICAL PARTS

Replacement parts are available from or through your local Tektronix, Inc. Field Office or representative.

When ordering parts, include the following information in your order: part number, instrument type or number, serial number, and modification number if applicable.

If a part you have ordered has been replaced with a new or improved part, your local Tektronix, Inc. Field Office or representative will contact you concerning any change in part number.

Change information, if any, is located at the rear of this manual.

Item Name

In the parts list, an item name is separated from the description by a colon(:). Because of space limitations, an item name may sometimes appear as incomplete. For further Item name identification, the U.S. Federal Cataloging Handbook H6-1 can be utilized where possible.

Figure and Index Numbers

Items in this section are referenced by figure and index numbers to the illustrations.

Indentation System

This mechanical parts list is indented to indicate item relationships. Following is an example of the indentations system used in the description column.

1 2 3 4 5 Name & Description

Assembly and/or component
Attaching parts for assembly and/or component

END ATTACHING PARTS

Detail part of assembly and/or component
Attaching parts for detail part

END ATTACHING PARTS

Parts of detail part
Attaching parts for parts or detail part

END ATTACHING PARTS

Attaching parts always appear in the same indentation as the item it mounts, while the detail parts are indented to the right. Indented items are part of, and included with, the next higher indentation.

Attaching parts must be purchased separately, unless otherwise specified.

Abbreviations

Abbreviations conform to American National Standard Y1.1.

CROSS INDEX - MFR. CODE NUMBER TO MANUFACTURER

Mfr. Code	Manufacturer	Address	City, State, Zip Code
09772	WEST COAST LOCKWASHER CO INC	16730 E JOHNSON DRIVE P O BOX 3588	CITY OF INDUSTRY CA 91744
12327	FREEWAY CORP	9301 ALLEN DR	CLEVELAND OH 44125-4632
16428	COOPER BELDEN ELECTRONIC WIRE AND CA SUB OF COOPER INDUSTRIES INC		
70903	COOPER BELDEN ELECTRONICS WIRE AND C SUB OF COOPER INDUSTRIES INC		
73743	FISCHER SPECIAL MFG CO	111 INDUSTRIAL RD	COLD SPRING KY 41076-9749
77900	ILLINOIS TOOL WORKS SHAKEPROOF DIV	ST CHARLES RD	ELGIN IL 60120
78189	ILLINOIS TOOL WORKS INC SHAKEPROOF DIV	ST CHARLES ROAD	ELGIN IL 60120
80009	TEKTRONIX INC	14150 SW KARL BRAUN DR PO BOX 500	BEAVERTON OR 97077-0001
81350	JOINT ARMY-NAVY SPECIFICATIONS, PROMULGATED BY MILITARY DEPARTMENTS UNDER AUTHORITY OF DEFENSE STANDARD- IZATION MANUAL 4120 3-M		
83309	ELECTRICAL SPECIALITY CO SUB OF BELDEN CORP	345 SWIFT AVE	SOUTH SAN FRANCISCO CA 94080-6206
83385	MICRODOT MFG INC GREER-CENTRAL DIV	3221 W BIG BEAVER RD	TROY MI 48098
86928	SEASTROM MFG CO INC	701 SONORA AVE	GLENDALE CA 91201-2431
91500	ASHEVILLE-SCHOONMAKER MICA CO	910 JEFFERSON AVE P O BOX 318	NEWPORT NEWS VA 23607-6120
93907	TEXTRON INC CAMCAR DIV	600 18TH AVE	ROCKFORD IL 61108-5181
S4307	SCHAFFNER ELECTRONIK AG		LUTERBACH SWITZERLAND
TK0435	LEWIS SCREW CO	4300 S RACINE AVE	CHICAGO IL 60609-3320
TK0858	STAUFFER SUPPLY CO (DIST)		
TK0935	MARQUARDT SWITCHES INC		
TK1373	PATELEC-CEM (ITALY)	10156 TORINO	VAICENTALLO 62/45S ITALY

Fig. & Index No.	Tektronix Part No.	Serial/Assembly No. Effective	Dscont	Qty	12345 Name & Description	Mfr. Code	Mfr. Part No.
1-1	437-0424-00	B010100	B102050	1	CABINET ASSY:1101A/1102/1103,ENCLOSURE W/FI XING SCREW & FEET (1101A ONLY)	80009	437-0424-00
	437-0424-01	B102051		1	CABINET ASSY:1101A/1102/1103 FLAME RETARDAN T ENCLOSURE W/FIXING SCREWS & FEET (1101A ONLY)	80009	437-0424-01
	437-0424-00	B010100	B010300	1	CABINET ASSY:1101A/1102/1103,ENCLOSURE W/FI XING SCREW & FEET (1102 ONLY)	80009	437-0424-00
	437-0424-01	B010301		1	CABINET ASSY:1101A/1102/1103 FLAME RETARDAN T ENCLOSURE W/FIXING SCREWS & FEET (1102 ONLY)	80009	437-0424-01
	437-0424-00	B010100	B010699	1	CABINET ASSY:1101A/1102/1103,ENCLOSURE W/FI XING SCREW & FEET (1103 ONLY)	80009	437-0424-00
	437-0424-01	B010700		1	CABINET ASSY:1101A/1102/1103 FLAME RETARDAN T ENCLOSURE W/FIXING SCREWS & FEET (1103 ONLY)	80009	437-0424-01
-2	131-0771-00			2	CONN,CIRC:: (1101A ONLY) (ATTACHING PARTS)	80009	131-0771-00
-3	220-0551-00			2	NUT,PLAIN,HEX:9 MM X 1.00,BRS NP	73743	ORDER BY DESCR
-4	210-0012-00			2	WASHER,LOCK:0.384 ID,INTL,0.022 THK,STL (END ATTACHING PARTS)	09772	ORDER BY DESCR
-5	198-5753-00			2	WIRE SET,ELEC:1101A (1101A ONLY)	80009	198-5753-00
-6	333-3900-00			1	PANEL,FRONT:1101A;;W/OVERLAY (1101A ONLY)	80009	333-3900-00
-7	131-4402-00			4	CONN,RCPT,ELEC:5 MIL PIN (1102 ONLY)	80009	131-4402-00
-8	389-0097-00			1	CIRCUIT BOARD:1102 INTERFACE (1102 ONLY)	80009	389-0097-00
-9	198-5650-00			1	WIRE SET,ELEC: (1102 & 1103 ONLY)	80009	198-5650-00
-10	333-3903-00			1	PANEL,FRONT:1102;;W/OVERLAY (1102 ONLY)	80009	333-3903-00
-11	131-1315-01			2	CONN,RF JACK: (1103 ONLY)	80009	131-1315-01
-12	175-3737-00			2	CABLE ASSY,RF:50 OHM COAX,2.5 L,6-N (1103 ONLY)	80009	175-3737-00
-13	131-3589-00			2	CONN ASSY,ELEC:FRONT PNL (1103 ONLY - DO NOT DISASSEMBLE) (ATTACHING PARTS)	80009	131-3589-00
-14	211-0413-00			8	SCREW,MACHINE:2-56 X 0.375,FLH,82 DEG,STL (END ATTACHING PARTS)	93907	ORDER BY DESCR
-15	354-0654-01			2	RING,CONN:BNC (1103 ONLY)	80009	354-0654-01
-16	386-5811-00	B010200	B010249	2	FLANGE,SWITCH:PLASTIC (1103 ONLY)	80009	386-5811-00
-17	----- -----			1	CKT BOARD ASSY:INTERFACE(SEE A2 REPL) (1103 ONLY)		
-18	----- -----	B010200	B010249	2	.SWITCH,PUSH:(SEE A2S1,S2 REPL) .(1103 ONLY)		
	----- -----	B010250		2	.SWITCH,PUSH:(SEE A2S1,S2 REPL) .(1103 ONLY) .(ATTACHING PARTS)		
-19	220-0189-00	B010250		2	.NUT,HEXFACE:CHROME,BRASS .(1103 ONLY)	80009	220-0189-00
-20	210-0021-00	B010250		2	.WASHER,LOCK:0.476 ID,INTL,0.018 THK,STL .(1103 ONLY) .(END ATTACHING PARTS)	78189	1222-01
-21	103-0319-00	B010250		2	.ADAPTER,SW:KB PUSHBUTTON SWITCHES .(1103 ONLY)	80009	103-0319-00
-22	198-5649-01	B010250		1	.WIRE SET,ELEC:1103 INTERFACE .(1103 ONLY)	80009	198-5649-01
-23	200-3635-00	B010200	B010249	2	.CAP,SWITCH:ROUND,YELLOW .(1103 ONLY)	80009	200-3635-00

Fig. & Index No.	Tektronix Part No.	Serial/Assembly No. Effective	Dscont	Qty	12345 Name & Description	Mfr. Code	Mfr. Part No.
1-24	366-1319-02			2	KNOB:GY,0.079 ID X 0.28 OD X 0.32 H (1103 ONLY)	80009	366-1319-02
-25	366-1077-00			2	KNOB:GRAY W/SETSCREW (1103 ONLY)	80009	366-1077-00
-26	----- -----			2	RES,VAR,NONWW:(SEE R110,R111,R120 & R121 REPL) (1103 ONLY) (ATTACHING PARTS)		
-27	210-0583-00			2	NUT,PLAIN,HEX:0.25-32 X 0.312,BRS CD PL	73743	2X-20319-402
-28	210-0046-00			2	WASHER,LOCK:0.261 ID,INTL,0.018 THK,STL	77900	1214-05-00-0541C
-29	210-0223-01			1	TERMINAL,LUG:0.26 ID,LOCKING,BRS TINNED (END ATTACHING PARTS)	TK0858	ORDER BY DESCR
-30	352-0902-00			1	HOLDER,LED: (1103 ONLY)	80009	352-0902-00
-31	333-3650-00			1	PANEL,FRONT: (1103 ONLY) (ATTACHING PARTS)	80009	333-3650-00
-32	210-0407-00			2	NUT,PLAIN,HEX:6-32 X 0.25,BRS CD PL	73743	3038-402
-33	210-0055-00			2	WASHER,LOCK:#6 SPLIT,0.031 THK,STL (END ATTACHING PARTS)	81350	ORDER BY DESCR
-34	----- -----			1	CKT BOARD ASSY:POWER SUPPLY(SEE A1 REPL) (1101A ONLY)		
	----- -----			1	CKT BOARD ASSY:POWER SUPPLY(SEE A1 REPL) (1102 & 1103 ONLY) (ATTACHING PARTS)		
-35	211-0292-00			4	SCR,ASSEM WSHR:4-40 X 0.29,PNH,BRS NI PL	78189	51-040445-01
-36	210-0906-00			4	WASHER,FLAT:0.125 OD X 0.2 OD X 0.035,FBR (END ATTACHING PARTS) CKT BOARD ASSY INCLUDES:	86928	56021932(BLACK)
-37	342-0202-00			3	.INSULATOR,PLATE:TRANSISTOR,MICA .(1101A ONLY)	91500	10-21-023-106
	342-0202-00			4	.INSULATOR,PLATE:TRANSISTOR,MICA .(1102 & 1103 ONLY)	91500	10-21-023-106
-38	----- -----			3	.MICROCKT,LI:(SEE A1U1,U2 & U3 REPL) .(1101A ONLY)		
	----- -----			4	.MICROCKT,LI:(SEE A1U1,U2,U3 & U4 REPL) .(1102 & 1103 ONLY)		
-39	344-0236-00			3	.CLIP,SPR TNSN:XSTR MTG,CU BE BRIGHT DIP .(1101A ONLY)	80009	344-0236-00
	344-0236-00			4	.CLIP,SPR TNSN:XSTR MTG,CU BE BRIGHT DIP .(1102 & 1103 ONLY)	80009	344-0236-00
-40	----- -----			1	.LT EMITTING DIO:GREEN(SEE A1DS1 REPL)		
-41	----- -----			1	XFMR,PWR,STPDN:(SEE T1 REPL) (ATTACHING PARTS)		
-42	211-0530-00			4	SCREW,MACHINE:6-32 X 1.750,PNH,STL	83385	ORDER BY DESCR
-43	210-0803-00			8	WASHER,FLAT:0.15 ID X 0.375 OD X 0.032,STL	12327	ORDER BY DESCR
-44	210-0812-00			4	WASHER,FLAT:0.188 ID X 0.375 OD X 0.31 (END ATTACHING PARTS)	83309	ORDER BY DESCR
-45	337-3797-00			1	SHIELD,ELEC:LINE VOLTAGE,1101A/1102/1103	80009	337-3797-00
-46	334-2332-00			1	MARKER,IDENT:DANGER:VOLTAGE IN THIS AREA	80009	334-2332-00
-47	441-1980-02			1	CHASSIS ASSY:1101A,1102,1103 HOUSING (ATTACHING PARTS)	80009	441-1980-02
-48	213-0138-00			1	SCREW,TPG,TF:4-24 X 0.188,TYPE B,PNH,STL	TK0435	ORDER BY DESCR
-49	213-0912-00			4	SCREW,TPG,TF:4-20 X 0.25 L,PAN HEAD STL (END ATTACHING PARTS)	93907	224-05891-024
-50	210-0202-00			3	TERMINAL,LUG:0.146 ID,LOCKING,BRZ TIN PL	86928	A-373-158-2
-51	210-0407-00			3	NUT,PLAIN,HEX:6-32 X 0.25,BRS CD PL	73743	3038-402
-52	334-3379-06			1	MARKER,IDENT:MKD GROUND SYMBOL	80009	334-3379-06
-53	204-0613-00			1	PWR,ENTRY MDL:	S4307	FN370-S
-54	----- -----			1	SWITCH,ROCKER:(SEE S6 REPL)		
-55	386-5840-00			1	PANEL,REAR:	80009	386-5840-00
-56	334-8210-00	B102051		1	MARKER,IDENT:MKD VOLTAGE/FUSE SELECT (1101A ONLY)	80009	334-8210-00
	334-8210-00	B010301		1	MARKER,IDENT:MKD VOLTAGE/FUSE SELECT (1102 ONLY)	80009	334-8210-00
	334-8210-00	B010700		1	MARKER,IDENT:MKD VOLTAGE/FUSE SELECT (1103 ONLY)	80009	334-8210-00

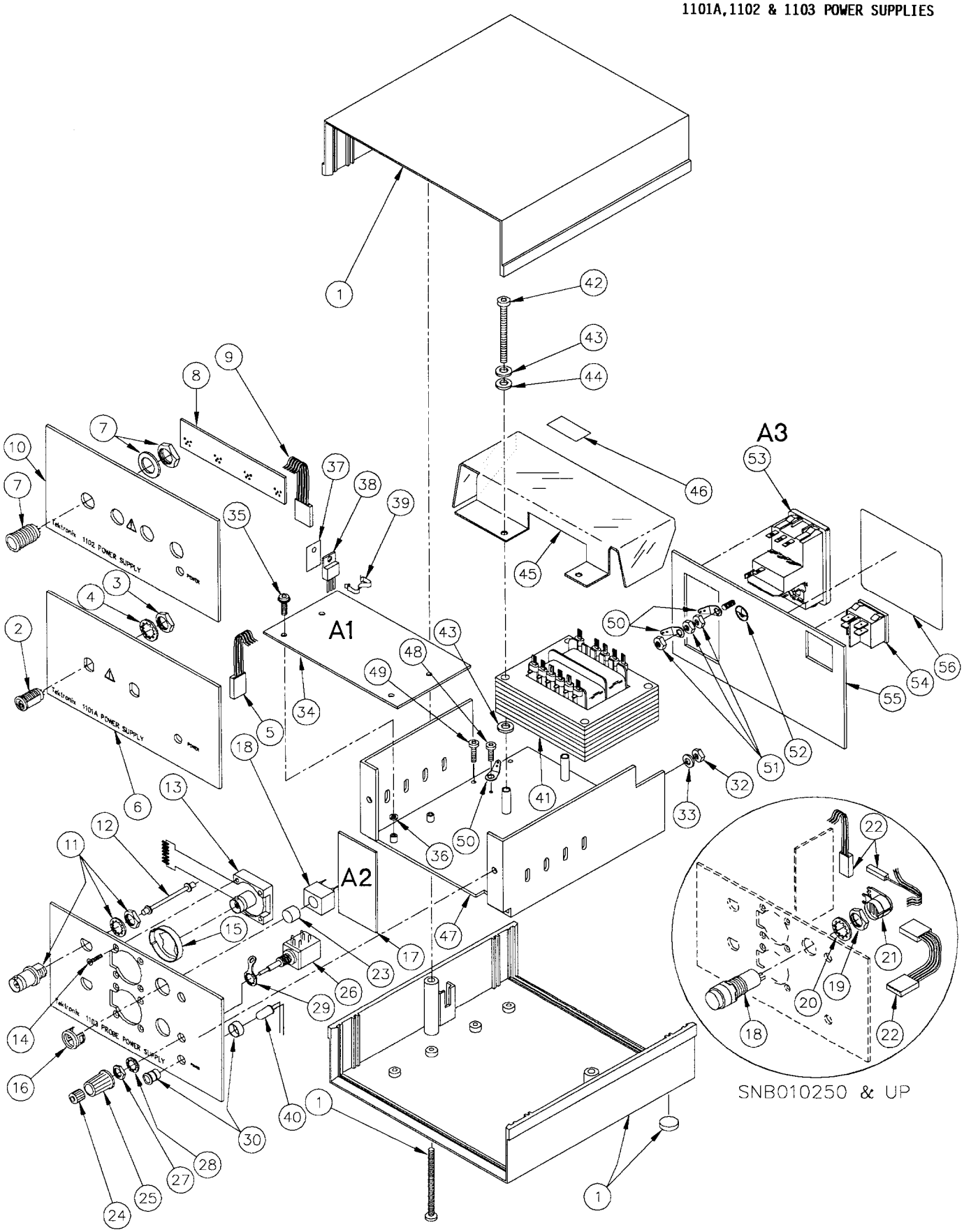

Figure 1. Exploded view.

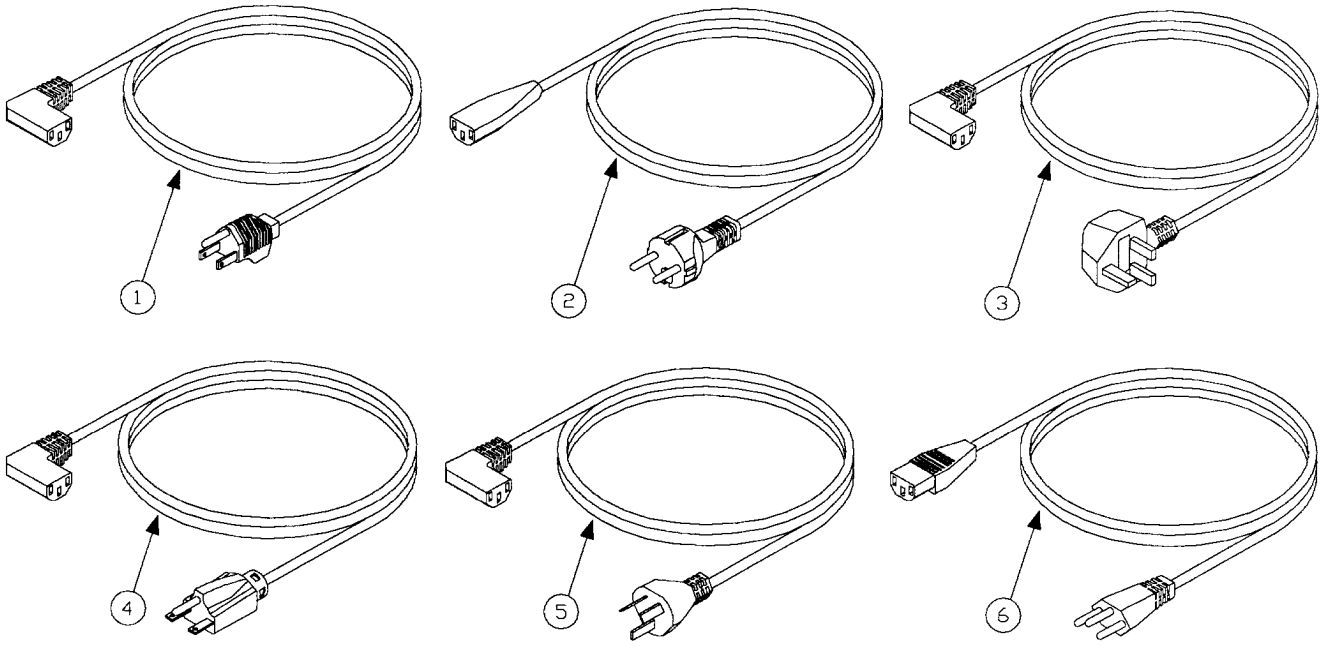

Figure 2. Accessories.

Fig. & Index No.	Tektronix Part No.	Serial/Assembly No. Effective	Dscont	Qty	12345 Name & Description	Mfr. Code	Mfr. Part No.
2-					STANDARD ACCESSORIES		
-1	161-0104-00			1	CABLE ASSY,PWR,:3 WIRE,98.0 L,W/RTANG CONN (STANDARD ONLY)	16428	CH8352, FH-8352
	----- -----			1	FUSE,CARTRIDGE:(SEE F1 REPL) (STANDARD ONLY)		
-2	161-0066-09			1	CABLE ASSY,PWR,:3,0.75MM SQ,220V,99.0 L (OPTION A1 ONLY)	80009	161-0066-09
	----- -----			1	FUSE,CARTRIDGE:(SEE F1 REPL) (OPTIONS A1 THRU A5 ONLY)		
-3	161-0133-00	B010200	B101656	1	CABLE ASSY,PWR,:3,0.75MM SQ,240V,3.05M L (1101A ONLY-OPTION A2 ONLY)	TK1373	A30UK-RA
	161-0104-07	B101657		1	CABLE ASSY,PWR,:3 X 0.75MM SQ,240V,98.0 L (1101A ONLY-OPTION A2 ONLY)	80009	161-0104-07
	161-0133-00	B010100	B010159	1	CABLE ASSY,PWR,:3,0.75MM SQ,240V,3.05M L (1102 ONLY-OPTION A2 ONLY)	TK1373	A30UK-RA
	161-0104-07	B010160		1	CABLE ASSY,PWR,:3 X 0.75MM SQ,240V,98.0 L (1102 ONLY-OPTION A2 ONLY)	80009	161-0104-07
	161-0133-00	B010200	B010283	1	CABLE ASSY,PWR,:3,0.75MM SQ,240V,3.05M L (1103 ONLY-OPTION A2 ONLY)	TK1373	A30UK-RA
	161-0104-07	B010284		1	CABLE ASSY,PWR,:3 X 0.75MM SQ,240V,98.0 L (1103 ONLY-OPTION A2 ONLY)	80009	161-0104-07
-4	161-0135-00			1	CABLE ASSY,PWR,:3,1.0MM SQ,250V,3.05M L,10A ,AUSTRALIAN (OPTION A3 ONLY)	80009	161-0135-00
-5	161-0134-00			1	CABLE ASSY,PWR,:3,18 AWG,240V,120.0 L (OPTION A4 ONLY)	70903	ORDER BY DESCR
-6	161-0154-00			1	CABLE ASSY,PWR,:3,1.00MM SQ,250V,10A,2.5MET ER SAFTEY CONTROLLED SWISS (OPTION A5 ONLY)	80009	161-0154-00
	070-8276-XX			1	MANUAL,TECH:INSTR,1101A/1102/1103	80009	070-8276-00

Tektronix®

REVISION INFORMATION

Manual Part No. 070-8276-00 First Printing Dec 1990

Product: 1101A, 1102, 1103 Revised Feb 1991

Manual Insert Status

DATE	CHANGE REFERENCE	STATUS
May 93	M77790	Effective

Tektronix®
COMMITTED TO EXCELLENCE

MANUAL CHANGE INFORMATION

Date: 5–23–93 Change Reference: M77790

Product: 1101A, 1102, 1103 Manual Part Number: 070–8276–00

DESCRIPTION Product Group 60

EFFECTIVE SERIAL NUMBER:

1101A: B102763 1102: B010349 1103: B011398

Description of changes:

Change A1 Power Supply board component locator illustration on A1 Power Supply Board & Schematic.
The position of R11 (311–0622–00) on the A1 Power Supply board has been changed to facilitate adjustment.

Circuit boards will be replaced as follows:

Product	Old Board	New Board	Eff. Ser. No.
1011A	671–2137–00	671–2137–01	B102763
1102	671–0711–01	671–0711–03	B010349
1103	671–0711–02	671–0711–04	B011398

A1 Power Supply board component locator.

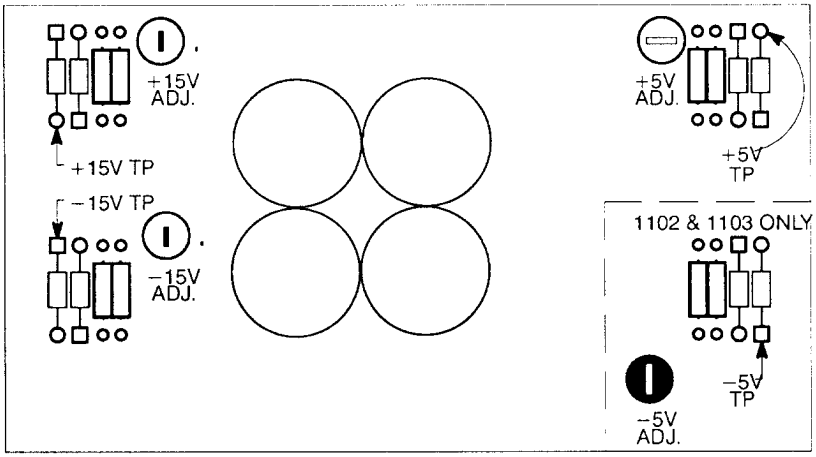

Before

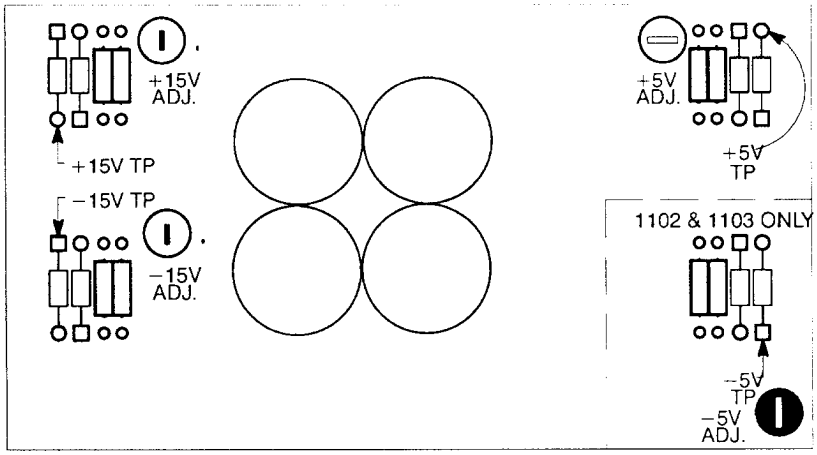

After