Established 1981
Advanced Test Equipment Rentals
www.atecorp.com 800-404-ATEC (2832)

Tektronix Logic Analyzers

▶ TLA601 • TLA602 • TLA611 • TLA612 • TLA621 • TLA622

Breakthrough Solutions for Real-time Digital Systems Analysis

Digital design engineers face daily pressures to speed new products to the marketplace. The TLA600 Series logic analyzers answer the need with breakthrough solutions for the hardware design team, providing the ability to quickly monitor, capture and analyze real-time digital system operation in order to debug, verify and optimize their systems. TLA600 Series logic analyzers are affordable, entry-level logic analyzers, which are ideal for general-purpose state/timing analysis. The TLA61x/62x logic analyzers feature front-panel controls, an integral display and support simultaneous external display. The TLA60x logic analyzers require an external display.

Hardware developers appreciate the TLA600 Series logic analyzers' range of capabilities. Their broad feature set includes capturing and correlating elusive hardware faults by triggering on glitches and setup/hold violations; providing simultaneous state and high-speed timing analysis; and using state acquisition to find the cause of complex problems. Productivity and connectivity features, such as the open Microsoft Windows 2000 Professional PC platform, make the TLA600 Series logic analyzers easy to use and easy to network into the design environment.

All Tektronix TLA logic analyzers share the same TLA application software so that if you learn one, you can use them all. You can also share setups and data between them as well as display data on Windows PCs with the TLAVu Offline Data Viewer.

▶ Features & Benefits

Up to 68 Acquisition Channels Provide Real-time Signal Analysis

MagniVu™ Acquisition Technology Provides 500 ps Timing Resolution to Find Difficult Problems Quickly

MagniVu Simultaneous State and 500 ps Timing Analysis Through the Same Probes Pinpoints Elusive Faults Without Double Probing and Reacquisition

Up to 200 MHz State Acquisition Analysis of Synchronous Digital Circuits

500 MHz Deep Timing Analysis with Up to 2 M Per Channel in Half Channel Mode For Fast and Deep General Purpose Timing

Up to 1 M Per Channel Full Channel Mode Acquisition Depth

Glitch Triggering and Setup/Hold Triggering Captures Elusive Hardware Problems

Transitional Storage Extends the Signal Analysis Capture Time

Glitch Storage Display Finds Troublesome Glitches Quickly

Cursors with 500 ps Timestamp Resolution Provides High Resolution Measurements

Repetitive Comparisons Increase Debug Productivity by Automatically and Continuously Checking Circuits for Correct Operation

Remote Control Enables Advanced Data Analysis with Other Development Tools

Offline Data Viewer (TLAVu) Increases Development Lab Productivity by Analyzing TLA Data on all PCs

Microsoft Windows® 2000 Professional Operating System Provides Familiar User Interface

PC Platform with Network Connectivity Easily Integrates into the Design Environment

▶ Applications

Digital Hardware Verification

Digital Hardware Debug

Monitor & Measure Digital Hardware Performance

Tektronix

MagniVu™ Acquisition Technology – A Breakthrough for Logic Analyzers

The TLA600 Series logic analyzers have unprecedented measurement capabilities. At the heart is a breakthrough acquisition technology called MagniVu. MagniVu is a super-high-speed sampling architecture that dramatically changes the way Tektronix logic analyzers work and enables them to provide startling new measurement capabilities. With MagniVu acquisition technology, all incoming data is always over sampled at 2 GHz. The over sampled data is then processed in real time to perform timing acquisition, state acquisition and triggering without missing crucial timing information on any channel.

- **500 ps Timing Resolution on All Channels –** By storing timing information in MagniVu's high-speed acquisition memory at the full 2 GHz rate, all TLA600 Series logic analyzers offer 500 ps timing resolution on all channels, all the time.
- **Up to 200 MHz State Acquisition With Up to 400 MHz Data Rate –** The TLA600 Series logic analyzers offer standard configurations with state acquisition up to 100 MHz for common applications and optional 200 MHz configurations for leading-edge applications. Since all clocks and data are over sampled at a 2 GHz rate and processed in real-time to provide 200 MHz synchronous acquisitions, each data sample is time-stamped with 500 ps resolution. Even high-speed double-pumped circuits can be easily supported with data rates up to 400 MHz in half channel mode.
- **Simultaneous State and Timing Analysis Through the Same Probes –** The TLA600 Series logic analyzers provide both general purpose timing and state acquisition simultaneously. They provide 500 ps timing and up to 200 MHz state acquisition at the same time, through the same probes. You no longer have to connect a second set of timing probes to a circuit from which you're already acquiring state data. There are no channel tradeoffs, no reacquisition of data, no double probing connections, and no double probing loading to get complete circuit visibility.

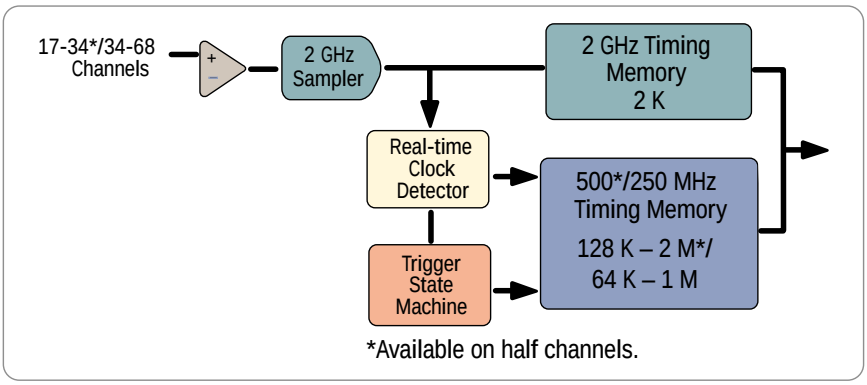

MagniVu Acquisition Technology also Makes it Possible to Provide the Following Measurement Capabilities Long Sought by Digital Design Engineers:

User-selectable Sample Point for Synchronous Clocking

Problem solving is easier with TLA600 Series logic analyzers, with MagniVu acquisition technology. Because the TLA600 Series logic analyzers always over sample incoming data at 2 GHz, they are able to provide unmatched state acquisition capabilities. The sample point for each channel can be placed anywhere from 8.5 ns before the selected clock edge to 7.0 ns after the clock edge, in 500 picoseconds increments.

If your design involves circuits with different timing requirements or even mixed logic families, that's no problem for the TLA600 Series logic analyzers; you can set different sample points and unique threshold settings for different groups of channels.

Precision Triggering on Setup-and-hold Violations

The TLA600 Series logic analyzers trigger on precise timing problems. Whether timing problems are suspect, or things seem to be working and you need to test for design margins, the TLA600 Series logic analyzer's triggering performs like no other logic analyzer. For example, the TLA600 Series logic analyzers trigger with 500 ps resolution on setup-and-hold time violations on any or all groups of channels. Also, select different timing limits for different groups and even verify propagation delay from clock-to-output of synchronous circuits.

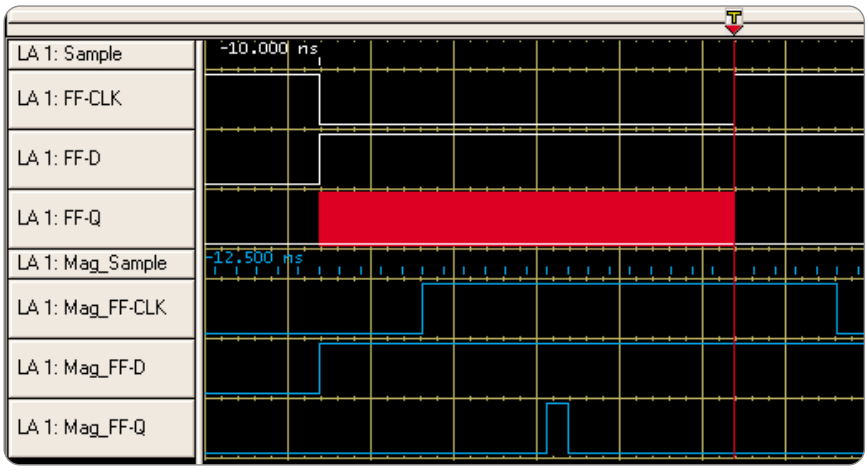

LA triggers on a glitch between LA 1: Sample points and indicates the glitch by a red bar on LA 1: FF-Q orm. The MagniVu's high speed timing resolution which is active on all channels, all the time, through the same probe captures and measures the 500 ps glitch on LA 1: Mag_FF-Q waveform.

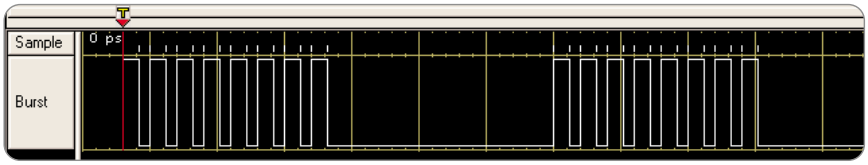

The TLA600 Transitional Storage saves data only when the data changes and results in a larger waveform time window. The 32 vertical sample marks on the top Sample waveform indicate stored sample points. A sample point is only stored when a change occurs. Unchanging sample points are not saved in memory between the two pulse bursts.

Glitch Trigger and Glitch Display

Not even glitches can escape the TLA600 Series logic analyzers. Glitch detection processes the same over sampled data. Glitches with two or more transitions between sample points on any channel are captured, displayed in red and can be used for glitch triggering. The TLA600 Series provides 500 ps glitch trigger resolution as well glitch storage, which is invaluable for quickly determining which of the many signals actually caused the glitch trigger. A red bar on the waveform channel indicates a glitch.

After a glitch is captured you can then use MagniVu's 500 ps timing resolution to precisely view the actual timing characteristics of the glitch without re-acquiring the glitch.

Transitional Storage

The TLA600 Series logic analyzers Transitional Storage effectively extends acquisition memory by storing data, either asynchronously or synchronously, only when there is a transition, thereby avoiding redundant data storage. You can capture events that are spaced up to 6.5 days apart. Using conventional storage, the overall time window of the above pulse burst acquisition was 4.1 µs. Using transitional storage, the overall time window increased to 19.7 ms, which represents a 4,800 increase in the time of the acquired signal.

500 MHz Deep Memory Timing Analysis

The TLA600 Series logic analyzers provide 500 MHz timing analysis on half of the channels with twice the depth. This provides 2 ns timing resolution with up to 2 M depth for capturing intermittent events over a wide time window. Using the TLA600 Series logic analyzer's Transitional Storage, you can capture events with 2 ns resolution with an overall time window of up to 6.5 days.

Performance Analysis for Optimizing System Performance

The TLA600 Series logic analyzers provide solutions for optimizing hardware designs. With its robust performance analysis tools, the TLA600 Series logic analyzer can help find and fix problems by monitoring, capturing and analyzing real-time hardware performance.

Performance Analysis generates statistical representations by post-processing real-time data acquired from digital circuits and displaying the results in a Histogram window. You can sort the display in either ascending or descending order. You can also export the results to other tools such as Excel™ for further analysis.

You can view the results acquired by two different methods:

- **State Overview:** Select a channel group, set up your ranges and press Run to monitor the number of hits against each channel group range.
- **Single Event:** Select a timer or counter, set up the time intervals either linearly or logarithmically and press Run to monitor the varying time with 4 ns resolution over multiple acquisitions.

Repetitive Acquisition with Comparison

The TLA600 Series logic analyzers can repeatedly acquire data from your target system and perform a variety of operations depending on the comparison results. At each iteration, you can either save the results and restart, or stop and send a command that could alert you via e-mail or pager. Then, you can save the results, concatenate them to a single file or specify that each new file has the file name auto-incremented.

The TLA600 Series logic analyzers can automatically compare the results of repeated acquisitions to a reference acquisition and highlight the differences in either Listing or Waveform windows. You can specify the range of samples over which to make the comparison or specify the offset. You can also mask or prevent channels from being compared.

It's possible as well to set up a TLA600 Series logic analyzer to continuously monitor a target system, thereby freeing you for other tasks and notifying you only when there's an anomaly.

Enhance Your Productivity

The TLA600 Series logic analyzers offer features that will increase your productivity. By employing open systems architecture with its Microsoft Windows 2000 Professional operating system, the TLA600 Series logic analyzers allow you and the tools you rely on every day to work in a more familiar, connected environment. The TLA600 Series logic analyzers run Microsoft Windows 2000 Professional, so you save time by quickly navigating the familiar user-interface. Windows is fully integrated and embedded when you open the box. This allows you to concentrate on the problem you're solving rather than the tool you're using.

With the TLA61x/62x logic analyzers you can view your data on either the 800 x 600 internal flat-panel display or simultaneously use an external monitor with up to 1280 x 1024 resolution.

The open platform allows you to seamlessly integrate the TLA600 Series logic analyzers with other networked applications and control the TLA600 Series logic analyzer remotely via a Web browser. It's easy to install design documentation and analysis tools on the TLA600 Series logic analyzers to view design specifications and provide a simple way to acquire and create system operation documentation. You also don't have to worry about how to integrate the TLA600 Series logic analyzers into your design environment. PC accessories can be used directly with TLA600 Series logic analyzers. TLA600 Series logic analyzers PC platform includes a LAN interface, PC Card slots with CardBus support, SVGA, parallel printer, USB and RS-232.

Remote Control with Support for Advanced Data Analysis

Using Microsoft Windows Component Object Model (COM/DCOM) technology, the TLA Programmatic Interface (TPI) provides next-generation technology for logic analyzer remote control. The TPI provides a modern function call interface that is compatible with COM/DCOM programmatic interfaces of other Windows applications. Support for non-Windows platforms (e.g., UNIX) is available as well. TLAScript provides basic scripting capability.

The TPI supports the following remote operations:

- **System:** Configuration, Load/Save, Run Control, Status & Errors
- **Logic Analyzer:** Load/Save, Trigger Setup, Acquisition Data & Parameters

With TPI you can spend less time trying to build advanced data analysis from scratch and instead use existing Windows applications such as Microsoft Excel, Microsoft Visual Basic or C++ to build an advanced data analysis application that seamlessly integrates with the TLA600 Series logic analyzer. You can then run your application directly on the TLA600 Series logic analyzer or from a computer connected via LAN to your TLA600 Series logic analyzer.

Offline Data Analysis

TLAVu Offline Data Viewer provides the ability to view TLA600 data offline on a Windows PC outside of the lab. TLAVu is a version of the TLA600 application software that you can install on a Windows 95, 98, NT4 or 2000 PC. Install TLAVu on your PC and use it to analyze the data that you've acquired on your TLA600 Series logic analyzer. Or you can send the TLA600 data directly to your colleagues or suppliers – instead of sending screen shots or Faxes – so that they can analyze the data using TLAVu on their own PCs.

You can also use TLAVu to create TLA600 Series logic analyzer setups for later use on your TLA600 in the lab. Just load a previously saved TLA600 system file from your TLA600 to automatically set the TLAVu hardware configuration, then create and save your new setups. The TLAVu™ program is part of every TLA600 Series logic analyzer. Also, TLAVu is available as a no-charge download from www.tektronix.com/la under the Software and Drivers section.

▶ Logic Analyzers Selection Guide

Logic Analyzer	TLA601	TLA602	TLA611	TLA612	TLA621	TLA622
Channels	34	68	34	68	34	68
MagniVu Timing	500 ps (2 GHz) All channels simultaneous state & timing through the same probe					
State Clock Rate	100 MHz Std. 200 MHz with Opt. 4S or 5S				100 MHz Std. 200 MHz with Opt. 6S	
Deep Timing (full/half CHs)	4 ns/2 ns (250 MHz/500 MHz)					
Memory Depth (full/half CHs)	64 K/128 K Std. 256 K/512 K with Opt. 1S or 5S All with 500 ps timestamp				1 M/2 M with 500 ps timestamp	
Triggering	Triggering with 16 states with each state having 1-4 If-Then-Else conditions. Trigger on Glitch, Setup/hold violations, Channel group range, etc.					
Analysis	Real-time correlated 500 ps timing and state display, Glitch display, Cursors with 500 ps resolution, Offline data analysis with TLAVu, Repetitive comparison, Performance analysis statistics					
Data Window Types	Waveform, Listing & Histogram (Performance Analysis)					
Remote Control	Using Microsoft COM/DCOM					
Symbols	User labels assigned to channel grouping states					
Operating System	Microsoft® Windows 2000 Professional					
Internal Display	None, requires external display		10.4 in. LCD with 800 x 600 pixels resolution			
External Display	1280 x 1024 pixels with 16.8 M true color		1280 x 1024 pixels with 16.8 M true color Dual operation with internal display			
PC Platform	Celeron, 64 MB RAM, 10 GB Hard disk (128 MB RAM, 30 GB with Opt. 1J), 40x CD ROM, 10/100Base-T LAN, Parallel & Serial Ports, USB, PC Card Slots					

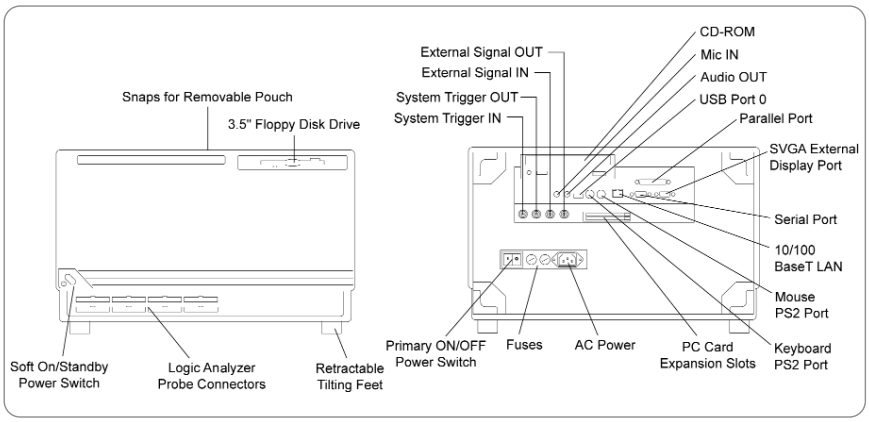

▶ ***TLA60X.*** *Logic Analyzer with External Display.*

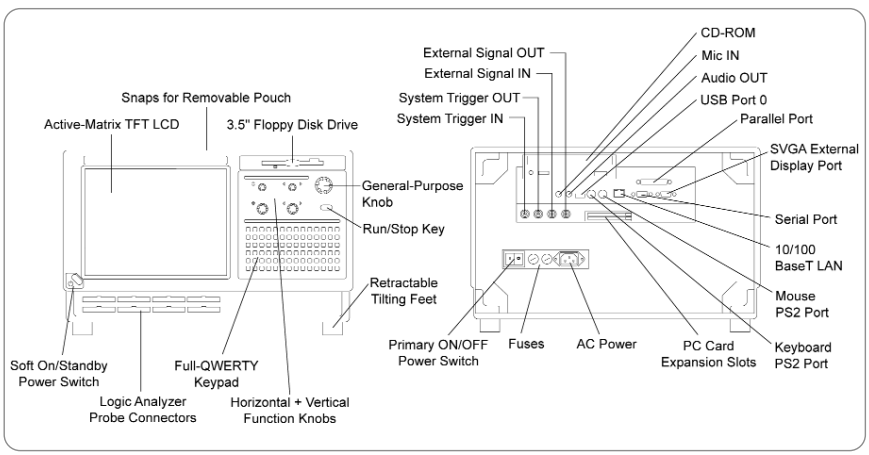

▶ ***TLA61X/62X.*** *Logic Analyzer with Internal Display.*

Contact Tektronix:

ASEAN Countries (65) 356-3900

Australia & New Zealand 61 (2) 9888-0100

Austria, Central Eastern Europe,
Greece, Turkey, Malta & Cyprus +43 2236 8092 0

Belgium +32 (2) 715 89 70

Brazil and South America 55 (11) 3741-8360

Canada 1 (800) 661-5625

Denmark +45 (44) 850 700

Finland +358 (9) 4783 400

France & North Africa +33 1 69 86 81 81

Germany +49 (221) 94 77 400

Hong Kong (852) 2585-6688

India (91) 80-2275577

Italy +39 (2) 25086 501

Japan (Sony/Tektronix Corporation) 81 (3) 3448-3111

Mexico, Central America, & Caribbean 52 (5) 666-6333

The Netherlands +31 23 56 95555

Norway +47 22 07 07 00

People's Republic of China 86 (10) 6235 1230

Poland (48) 22 521 5340

Republic of Korea 82 (2) 528-5299

South Africa (27 11) 651-5222

Spain & Portugal +34 91 372 6000

Sweden +46 8 477 65 00

Switzerland +41 (41) 729 36 40

Taiwan 886 (2) 2722-9622

United Kingdom & Eire +44 (0)1344 392000

USA 1 (800) 426-2200

For other areas, contact: Tektronix, Inc. at 1 (503) 627-1924

For the most up-to-date product information
visit our web site at www.tektronix.com

Copyright © 2001, Tektronix, Inc. All rights reserved. Tektronix products are covered by U.S. and foreign patents, issued and pending. Information in this publication supersedes that in all previously published material. Specification and price change privileges reserved. TEKTRONIX and TEK are registered trademarks of Tektronix, Inc. All other trade names referenced are the service marks, trademarks or registered trademarks of their respective companies.

02/01 HB/XBS 52W-14634-0

this product is available from:

Thurlby Thandar Instruments Ltd.
Glebe Road, Huntingdon
Cambs. PE29 7DR England
Tel: 01480 412451
Fax: 01480 450409
email: sales@tti-test.com
web: www.tti-test.com

TTi is a Strategic Partner distributor for Tektronix distribution products in the U.K..

We aim to keep many of the most popular products in stock for immediate delivery.

We can provide technically based advice on the use of these products and our sales engineers will be pleased to arrange a demonstration.

Measurably Better Value