Adaptation Kit for Veeco MultiMode AFM

NANONIS AK-VM4

The AK-VM4 is an adaptation kit to connect the Nanonis SPM Control System to a Veeco MultiMode Atomic Force Microscope. This product offers most advanced and new SPM applications to the numerous owners of a Veeco MultiMode SPM by upgrading just the control system. The AK-VM4 provides the power supplies for the MultiMode head, buffering of signal lines and a redistribution of the lines of the Veeco 37-pin connector to the other components of the Nanonis SPM Control System.

With the Nanonis Base Package and the Nanonis High Voltage Amplifier it is possible to conduct all kinds of STM and contact-mode AFM measurements: high resolution scanning, sophisticated spectroscopy, force-distance curves and very low noise feedback control. But the main advantage of the AK-VM4 comes with the Nanonis Oscillation Control Module: It brings the power of a high performance digital Phase Locked Loop (PLL), tightly integrated into the control system, to the well-known MultiMode. Whether non-contact AFM, tapping mode, constant excitation, constant amplitude or dissipation mode, a vast set of new dynamic modes is now available that has never been exploited before on this microscope.

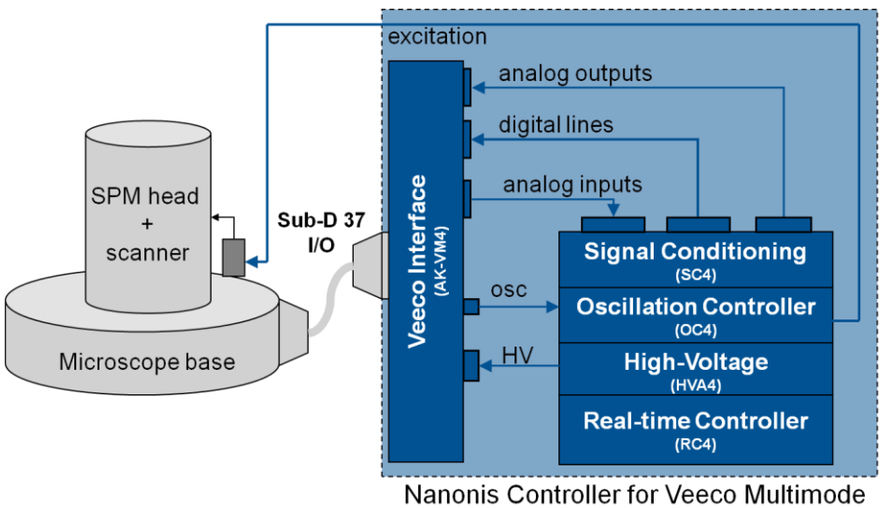

Fig. 1: The original cable from the Veeco microscope is used for direct connection to the AK-VM4. All Input/Output signals are then redirected from this Veeco Interface to the Nanonis SC4, OC4 and HVA4 with dedicated cables (included).

The block diagram in Fig.1 illustrates how the Nanonis control system connects to a Veeco MultiMode microscope. The original cable from Veeco with the Sub-D37 connector is used. Inside the AK-VM4 all Input/Output signals are routed to dedicated connectors for the different Nanonis modules. There is no need for the Veeco Signal Access Module (SAM, also known as the break-out box). The stepper motor (engage/disengage) is accessed through the digital lines of the Nanonis SC4 and the auto-approach is performed directly by the Nanonis software.

Example applications include:

- High resolution imaging
- Advanced Force- and Bias- spectroscopy on a point, a line or a grid
- Any dynamic AFM mode (with Nanonis OC4)
- Kelvin Probe Force Microscopy imaging (with KPFM Software Module)
- Haptic nanomanipulation and lithography (with Tactile Nanomanipulator module)
- Dual-frequency tracking (with second OC4)

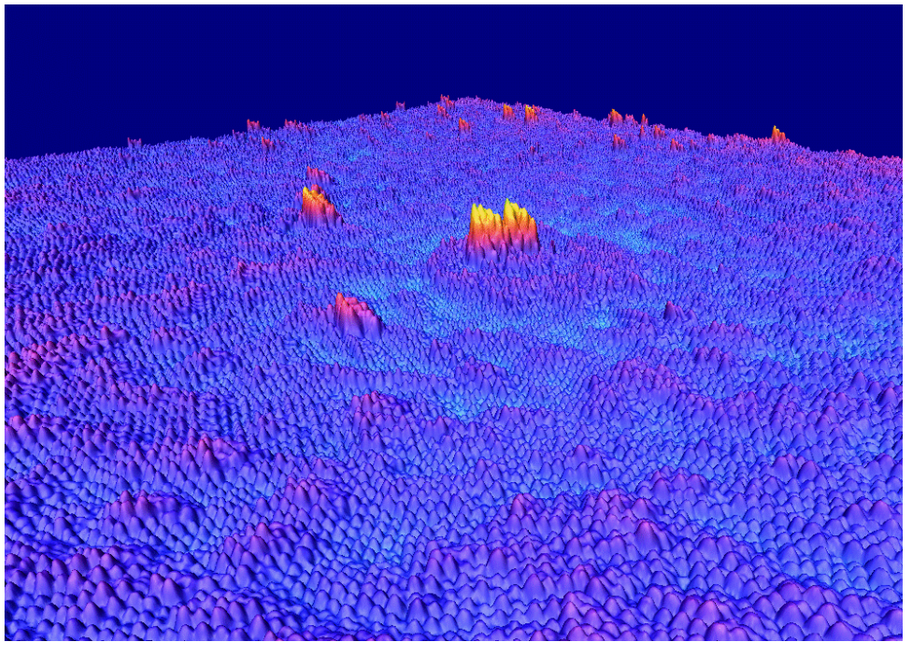

Fig. 2: High-resolution image (2048 x 2048 pixels) acquired with the Veeco MultiMode driven by a Nanonis control system in intermittent contact mode. 48 x 48 µm image of 200 nm polystyrene beads. Note the high detail resolution even for such a large scan area. Courtesy of D. Ziegler in the Nanotechnology Group of Prof. A. Stemmer, ETH, Zurich.

NANONIS
The SPM Application Experts
SPECS Zurich GmbH | Switzerland
support@specs-zurich.com | www.specs-zurich.com

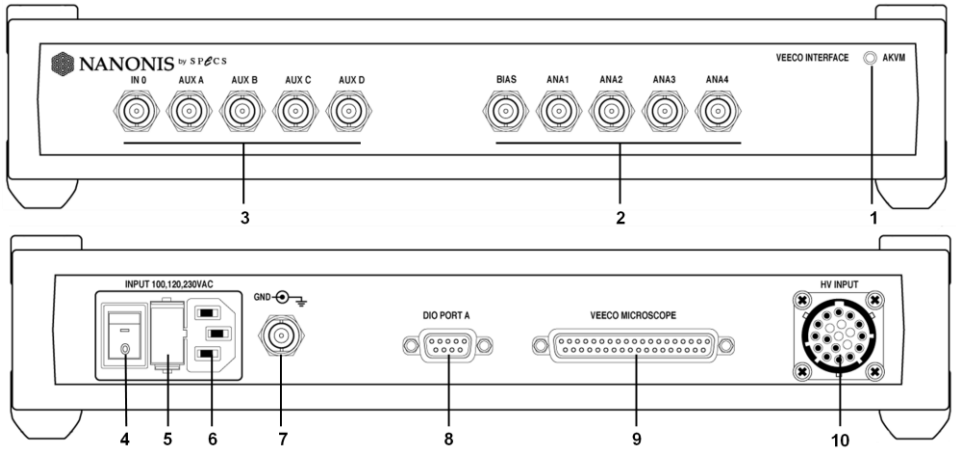

Fig. 3: 1) Power indicator LED, 2) Analog inputs (connected to outputs of Nanonis SC4) , 3) Analog outputs (connected to inputs of Nanonis SC4), 4) Power Switch, 5) Main Power Fuse, 6) AC Power Input, 7) BNC for analog/chassis ground, 8) Digital input for SC4, 9) 37-Pin Connector (from Veeco-microscope), 10) High-voltage input (from Nanonis HVA4).

GENERAL

casing	Wavetronic, stackable
main power	230 V AC / 120 V AC / 100 V AC(±15%)
operating temperature	+5° to +45°C
dimensions	33.0 x 26.8 x 5.4 cm (Width x Depth x Height)
weight	ca. 2 kg
compliance	CE

POWER SUPPLIES

voltages	+15 V DC, -15 V DC, +5 V DC, +5 V DC Motor
ground	common, connected to chassis

ANALOG OUTPUTS (3)

In O (current/amplitude/Δf)	SC4 input 1
Aux A	SC4 input 2
Aux B	SC4 input 3
Aux C	SC4 input 4
Aux D	SC4 input 5

ANALOG INPUTS (2)

Bias	SC4 output 8
Ana2 (Low Volt.)	SC4 output 1
Ana1	SC4 output 2
Ana3	SC4 output 3
Ana4	SC4 output 4

DIGITAL LINES (8)

digital signals (pins 6, 2, 7, 3)	3.3 V TTL
motor coils	Port A, DIO 0-3

NANONIS
The SPM Application Experts
SPECS Zurich GmbH | Switzerland
support@specs-zurich.com | www.specs-zurich.com