Victoreen® 660

Digital Radiation Survey Meter

Operators Manual

March 2005
Manual No. 660-1-1B Rev. 2

Fluke Biomedical
Radiation Management Services

6045 Cochran Road
Cleveland, Ohio 44139
440.498.2564

www.flukebiomedical.com/rms

Table of Contents

(Blank Page)

Section 1
Introduction

1.1 General Description

The Portable Health Survey System 660 is a wide-range gamma ray and x-ray exposure and exposure rate measuring system. The system can also be utilized for alpha and beta radiation measurement using different probes.

At present the system has two ionization-chamber detectors. Two more are projected - all differing from one another in the size of the ionization chamber, and thus in sensitivity. Other detectors may be added with thin-window chambers for alpha radiation measurement.

The hand-held probes containing the ionization chambers also contain charge-digitizing circuitry. This circuitry contains its own calibration adjustments.

The readout unit containing the display, batteries, charging circuitry, logic, and power conversion electronics is mounted in a case which can be carried or mounted separately, or can be clipped together with the detector to make a single hand-held unit.

1.2 Specifications for Portable Health Survey System 660

The portable readout logic units senses automatically the type of probe connected to it, whether its function switch is set for “exposure” or “exposure rate”, and the condition of all of its batteries and the adequacy of the input signal.

It then displays:

1. Nothing if bias or power batteries are low.
2. Flashing eights if the level to be indicated is over-range.
3. Flashing alternate rate or exposure units if the instantaneous or continuous radiation intensity is too high for an accurate measurement or if no probe is connected.
4. Under normal circumstances, the proper exposure or exposure rate with only the correct units of measurement lighted and visible and with the decimal point properly placed.

Size	Readout Case: Approximately 5-3/8 x 8-½ x 4-3/8 in high (13.9 x 21-½ x 11 cm) Small Probe: 6.36 cm diameter by 0.4 cm thick (10 cm^2 x 0.4 cm) Large Probe: 12.8 cm diameter by 4.83 cm thick (100 cm^2 x 4.0 cm) Probe Cable: 10 ft and 2 ft
Weight	Readout Unit: 7 lb Probes: Less than 2 lb each
Temperature Range	50° to 104°F (10° to 40°C) maximum sensitivity change of ± 10% except for air density correction
Relative Humidity	0 to 95% non-condensing

Batteries	One 67.5 V collecting voltage battery, and four 1.25 V rechargeable dry cells
Battery Life	16 hours between charges at 68°F (20°C) with new batteries at normal usage. Automatic shutoff when charge drops below usable level
Battery Charge Time	10 hours for ¾ charge at 68°F (20°C)
Meter	Four-decade coverage, arbitrary marking; can be installed by unskilled person without tools
Power Cord	AC power cord for recharging batteries
Readout Module Case	Extruded heavy aluminum case
Controls	Function Switch: OFF, RATE, EXP Reset Switch: RUN, STOP, RESET

NOTE

Readout - see probe specifications on page 18

Calibration	Integral calibration of probes so they are completely interchangeable
Logic	Automatic changes in logic (units, decimal point) to accommodate whichever probe is plugged in
Overrange Alarm	Three flashing eights at 3 times normal rate or better
Accuracy	Better than ± 5% on ^{137}Cs at 20° ± 2°C
Time Base Stability	± 1% long or short term
Digitizer Stability	± 2% per year; ± 1% short term at 20° ± 2°C
Energy Response	± 10% for 20 to 660 keV; ± 15% for 20 keV to 1 MeV, as measured on constant potential x-ray machine

1.3 Procedures, Warnings, and Cautions

The equipment described in this manual is intended to be used for the detection and measurement of ionizing radiation. It should be used only by persons who have been trained in the proper interpretation of its readings and the appropriate safety procedures to be followed in the presence of radiation.

Although the equipment described in this manual is designed and manufactured in compliance with all applicable safety standards, certain hazards are inherent in the use of electronic and radiometric equipment.

WARNINGS and **CAUTIONS** are presented throughout this document to alert the user to potentially hazardous situations. A **WARNING** is a precautionary -message preceding an operation that has the potential to cause personal injury or death. A **CAUTION** is a precautionary message preceding an operation that has the potential to cause permanent damage to the equipment and/or loss of data. Failure to comply with **WARNINGS** and **CAUTIONS** is at the user's own risk and is sufficient cause to terminate the warranty agreement between Fluke Biomedical, Radiation Management Services and the customer.

Adequate warnings are included in this manual and on the product itself to cover hazards that may be encountered in normal use and servicing of this equipment. No other procedures are warranted by Fluke Biomedical. It shall be the owner's or user's responsibility to see to it that the procedures described here

are meticulously followed, and especially that **WARNINGS** and **CAUTIONS** are heeded. Failure on the part of the owner or user in any way to follow the prescribed procedures shall absolve Fluke Biomedical and its agents from any resulting liability.

Indicated battery and other operational tests must be performed prior to each use to assure that the instrument is functioning properly. If applicable, failure to conduct periodic performance tests in accordance with ANSI N323-1978 (R1983) Radiation Protection Instrumentation Test and Calibration, paragraphs 4.6 and 5.4, and to keep records thereof in accordance with paragraph 4.5 of the same standard, could result in erroneous readings or potential danger. ANSI N323-1978 becomes, by this reference, a part of this operating procedure.

(Blank page)

Section 2
Operation

2.1 Operation

Select the probe that will provide readings in the proper range (see specification table). Choose the shorter (2-foot) cable if its length is sufficient for the application; otherwise use the 10-foot cable. Connect the probe to the readout module with the cable. The two ends are similar and either end can be attached to either module. Clamp the probe to the readout module case (if that mode of operation is desired). Position the probe so that the anticipated direction of radiation is normal to the flat surface of the ionization chamber.

Two modes of operation can be chosen by the function switch: RATE and EXP. When the switch is in the RATE position, rate of exposure is shown updated at one-second intervals. This mode of operation would likely be used with the equipment hand-held, or temporarily positioned to verify the level of activity from certain sources, or at certain locations. Be sure the reset switch is in RUN position before attempting a reading.

When the function switch is in the EXP position, the instrument displays a running total of exposure from inception of monitoring to the moment of shutoff. This mode of operation is likely to be used with the equipment positioned more or less permanently depending on the length of reading. The system is powered by internal batteries and does not need a power cord for operation. The function of the power cord is to recharge the batteries from a 115 V line. Starting with reasonably well-charged batteries, and with the power cord connected, the system can continue to monitor almost indefinitely.

It is advisable when starting a count in this mode, to momentarily move the reset switch to the RESET position to clear any previously stored counts.

When the equipment is not in use, be sure both function and reset switches are in the OFF position.

2.2 Functional Description

The 660 consists of two functional entities, the probes and the readout unit.

2.2.1 Probe Function

The 660 probe has three functions:

1. It has an ion chamber that detects incoming radiation by causing a current flow.
2. It has a digitizing circuitry that changes the input flow into a digital signal (pulses).
3. It has a codified logic output that identifies the particular probe and causes the readout unit to set a corresponding level of readout.

2.2.2 Ion Chamber

The ion chamber is a calibrated chamber that produces current at a certain rate when exposed to a certain level of radiation. The 4 cc (small) chamber produces enough current to discharge the digitizer (1 pulse) with every 0.0167 mR of radiation exposure. The 400 cc (large) chamber produces enough current to discharge the digitizer (1 pulse) with every 0.0278 microroentgens of radiation exposure.

2.2.3 Digitizing Circuitry

The input from the ion chamber is integrated by U1 shown in the schematic of Figure 2-1. The integrating capacitor is C1. The output from U1 causes the output potential of U2 at pin 6 to drop to ground level. The drop in potential triggers a circuit in U3 causing an output from pin 6 that returns to reset the circuit for another integrating cycle of U1. Another output from this circuit at pin 7 triggers another circuit in U3. This second circuit produces a feedback pulse that resets U3 (in the event that ion chamber input was so high that the feedback from the first U3 circuit did not completely reset the circuit).

This feedback will cause U3 to continue to oscillate at about 100 kHz. This oscillating signal will trigger an overrange output in the readout module. The output from the second circuit of U3 through pin 10 operates Q2 and Q3 that produce the digital output to the readout unit.

2.2.4 Identification Logic

Two output lines carry binary signals to the readout module. These signals make a pattern of one of four codes unique to the probe producing them. They are used by the readout module to determine count rates and location of decimal point as explained in Section 2.3.

2.3 Readout Unit Function

The readout unit receives the digital (pulse) input from the digitizer, and processes it according to logic that is controlled in part by the code on the identification logic lines, and in part by internally generated pulses, to produce an output display that can be read directly in engineering units. The readout unit operates in one of two modes: The EXP mode or the RATE mode. The block diagram of Figure 2-2 shows the relationship of the various functional elements. The blocks of Figure 2-2 are identified on the schematic of Figure 2-3.

2.3.1 EXP Mode

In the EXP mode of operation, the meter continues to integrate exposure until it is turned off or until the limit of its capacity is reached. The path of the digital data through the circuit is represented by the dotted line in the block diagram. The input pulses from the digitizer in the handle of the probes pass first through a set of decade counters that perform one of three functions.

Figure 2-1. Digitizing Circuitry of Typical 660 Probe

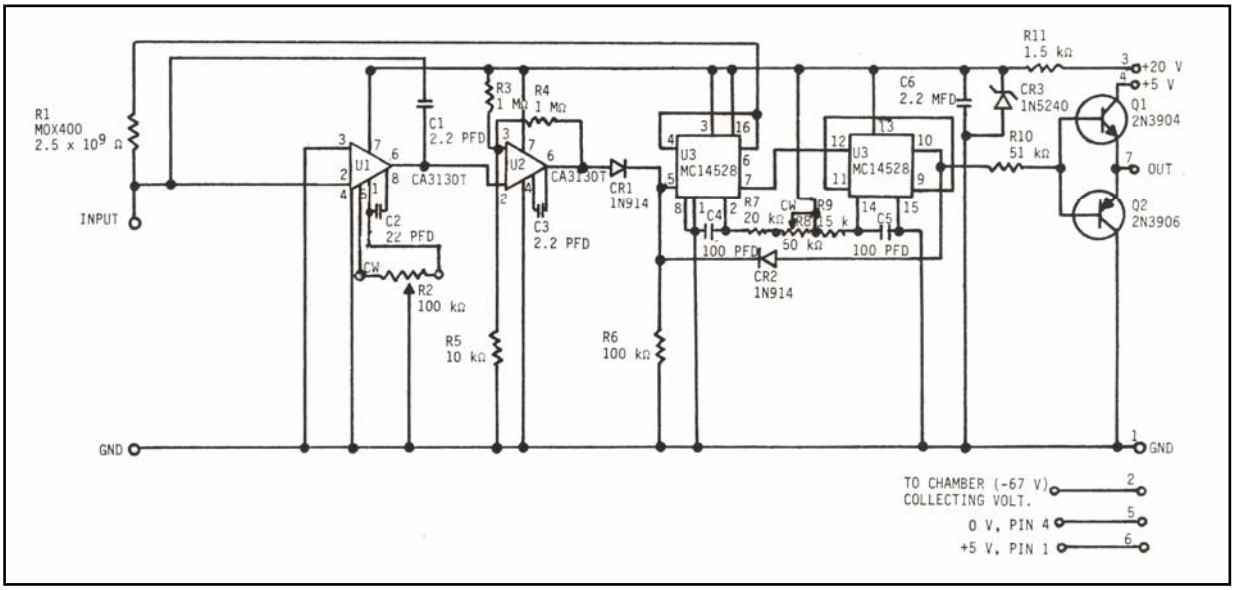

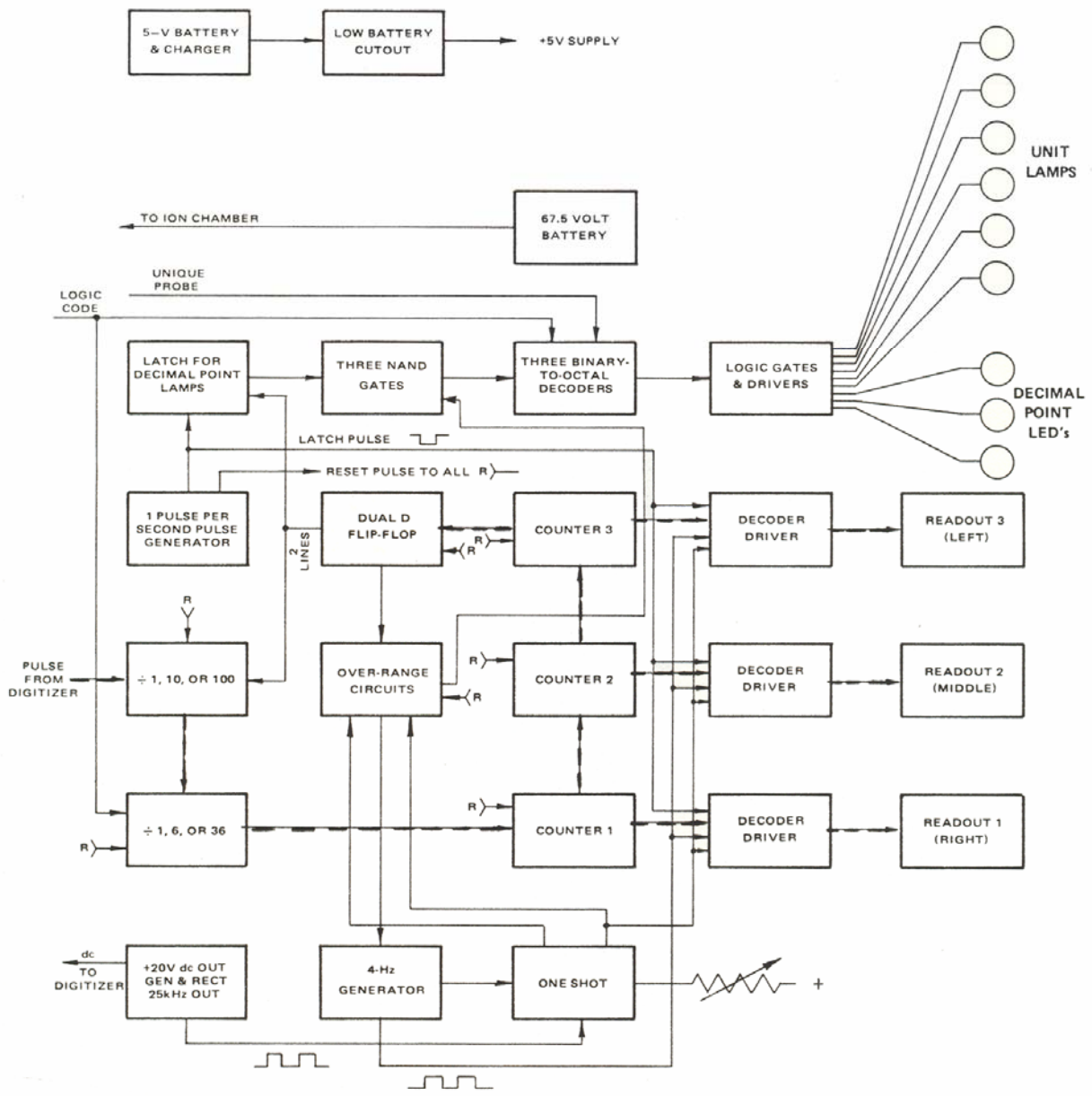

Figure 2-2. Block Diagram of Readout Unit Function

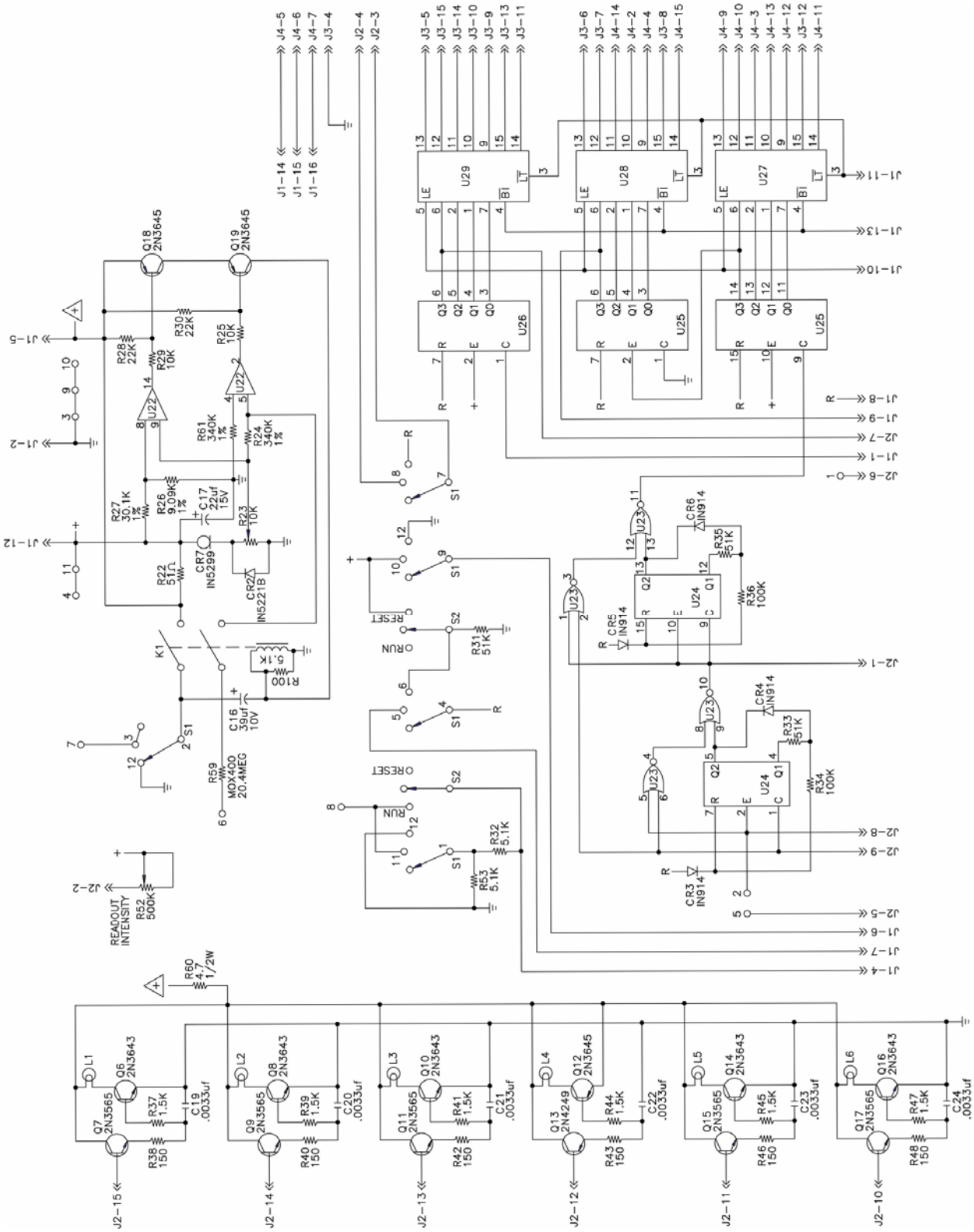

Figure 2-3. Schematic Diagram of 660 (660-1-13)

1. Pass all pulses
2. Pass every tenth pulse
3. Pass every hundredth pulse

Which of these functions is performed depends on a logic input from the dual flip-flop, which in turn depends on a feedback from the display counters.

The output from this set of counters goes to a second set of decade counters arranged much like the first set, except that both counters have bypass circuits applied to stop the count at six instead of ten. As a result the three possible functions in this circuit are:

1. Pass all counts
2. Pass every sixth pulse
3. Pass every thirty-sixth pulse

Either Function 2 or Function 3 is selected by the unique probe when the survey system is in the EXP mode of operation. Function 1 is selected by the display panel function switch when it is in the RATE position.

The output from the second set of counters goes to the first digit counter that operates the right-hand digit display. On the tenth count, the counter overflows into Counter 2 and resets to zero. On the tenth decade count, Counter 2 overflows into Counter 3 and resets to zero. On the tenth century count, Counter 3 overflows to the dual flip-flop but resets to 1 rather than to zero, since the flip-flop will initiate a change in location of decimal point, and in processing of the incoming pulses.

The latch for the decimal point LED's receives the signal from the dual flip-flops to change the decimal point and passes it through the NAND gates and the decoders to the logic gates and drivers. These correctly position the decimal point by lighting the proper LED and, if necessary, change the unit's indicating lamp.

2.3.2 RATE Mode

The course of the input pulse through the system is the same in the RATE mode as in the EXP mode. The logic control for the counters is adjusted to reflect the rate indicated. The 6X and 36X counters are locked out.

The 1 pulse-per-second pulse generator puts out two signals:

- A reset pulse that resets all systems once a second. This includes all counters and the overrange circuit as indicated by the R symbol in Figure 2-2.
- A latch pulse that holds the display of the last second's count while a new count is being made.

2.3.3 Overrange

After the dual flip-flops have changed range twice in any count, they pass a logic signal to the overrange circuits that in turn actuate the 4 Hz generator. The 4 Hz generator puts out a 4 Hz square-wave that gates the one-shot on and off approximately four times per second. The one-shot, powered by a 25 kHz square wave, supplies power for the LED's of the display. A control on the panel operates a potentiometer to control the length of the one-shot pulse, and thus the intensity of light in the LED's. Operating the LED's at low intensity, when practical, conserves battery power.

2.3.4 Power

All power for the system is provided by batteries in the readout unit. There is a 67.5 V battery to supply potential for the ion chamber, and a set of four 1.25 V rechargeable (Ni-Cad) dry cells. The charging circuit for the dry cells is shown in Figure 2-5. Transformer T1 primaries are connected to the 115 V, 60 Hz supply line. The secondary coils provide charging current (0.5 A) for the dry cells. This voltage is

rectified by diodes CR2 and CR3. The function of U1 is to time the initial charge and cut it down to a trickle charge (0.1 A) after about 10 hours (24 cycles, or 9.71 hrs at 60 Hz). In operation the instrument uses about 0.2 A. The 0.5 A charging rate is designed to completely charge a depleted battery in 10 hours (i. e. overnight). The trickle charge is low enough to leave on the battery for months, if necessary.

The 0.5 A charging cycle can be reinitiated only by disconnecting the power cord and then reconnecting it.

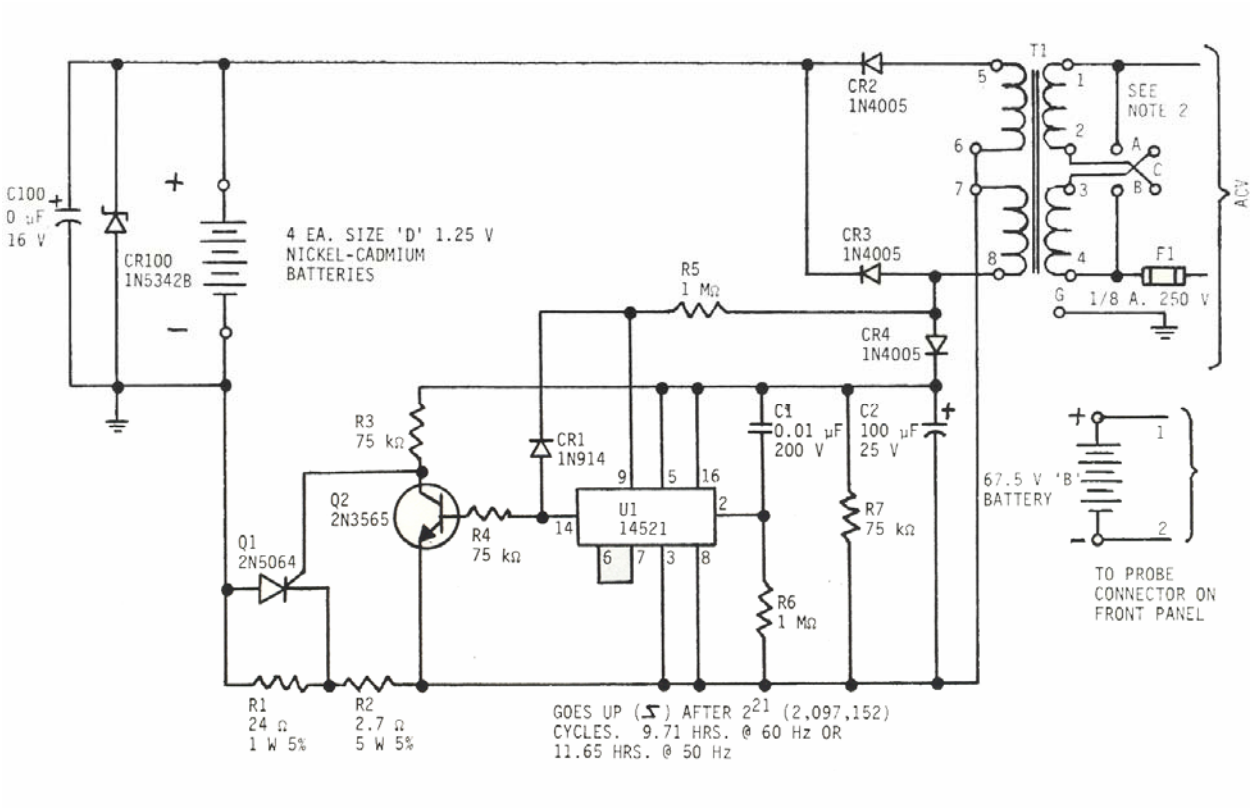

Figure 2-5. Charging Circuit for Battery of 1.25 V Dry Cells

The drain on the 67.5 V battery is almost negligible. However, if either the 67.5 V battery potential or the 6 V battery potential fall below a usable level, the instrument will shut itself off. The low battery cutout shown in Figures 2-3 and 2-4 performs this function.

The instrument can be started again only by turning the function switch off, then on again. While the instrument is off, it will slowly recharge the batteries (if the power cord is connected) reaching full charge in about 50 hours. If the attempt is made to turn on a fully discharged instrument, it will stay on only a few seconds, and then turn itself off again.

If the instrument with a depleted 5 V battery is turned on, and the power line is connected, the following sequence occurs:

- For the first ten hours the charging circuit supplies 0.3 A charging current and 0.2 A operating current.
- After the first ten hours, the battery and the charging circuit each supply 0.1 A operating current.
- If the LED intensity is turned down to the lowest point, the instrument will draw only about 0.1 A, and for all practical purposes could be considered to be able to run continuously in this mode.

The generator/rectifier shown in the lower left corner of Figure 2-3 takes the nominal 5 V input from the battery and produces two outputs:

- A 25 kHz driving frequency for the one-shot
- A 20 V supply for the digitizer

(Blank Page)

Section 3
Maintenance, Calibration and Troubleshooting

Very little maintenance is required for the 660. It is only necessary to keep the battery terminals clean and bright, and arrange for calibration of the probes periodically.

3.1 Maintenance of Battery Terminals

The battery terminals are in plastic terminal boxes inside the readout unit. The terminal boxes are designed so that it is next to impossible to put a dry cell in the reversed position. Inspect the terminals occasionally to be sure they are free of corrosion or salt buildup. Corroded terminals are easily snapped out of the box and need only to have a soldered wire removed to replace the terminal.

3.2 Changing 67.5 V Battery

1. Remove power cord.
2. Remove handle and handle screw.
3. Remove the four rubber feet from case bottom by unscrewing the screws in center of feet.
4. Lift instrument from case bottom.
5. Remove bottom angle plate by unscrewing two flathead screws at each end.
6. Unplug connector from 67.5 V battery and slide out of its bracket.
7. Replace with new battery and reassemble.

3.3 Calibration

The readout unit does not need calibration, since it only processes signals for readout that have been generated in the probe. It is recommended that probes be returned to Fluke Biomedical for calibration, since it takes a narrow beam of radiation of known intensity to properly and safely calibrate the probe.

3.4 Zeroing the Probe

Access to the zeroing potentiometer in the probe has been provided by means of a snap-out button in the probe handle. When this button is removed, the slotted adjustment head of a ten-turn potentiometer can be seen. Zero the probe as follows:

NOTE

Be sure the probe is shielded from all radiation during the zeroing procedure.

1. Put the instrument in the RATE mode.
2. Turn the zero adjustment clockwise until counts begin to appear in the readout.
3. Turn the adjustment counter-clockwise until the readout alternates between zero and 1 or between 1 and 2.

CAUTION

Do not overadjust. The instrument does not register below zero. It would be possible to depress the instrument zero into the negative range, and the instrument would give no indication this had happened.

Table 3-1 List of Recommended Spare Parts

Description	Reference Designator	Part No.	No. In Assembly
Chassis Assembly	-	660-1-53	1
Indicator Knob	-	9-59	1
Indicator Knob	-	9-48	1
Standoff	-	40-191	4
Spacer 0.500 Lg	-	40-147	4
Spacer 0.250 Lg	-	40-134	4
Power Supply PCB	-	660-1-20	1
Logic Board Assembly	-	660-1-15	1
Display Board Assembly	-	660-1-10	1
Power Supply PCB			
PC Board Proc	-	660-1-21	1
Receptacle Assembly		660-1-47	1
Battery Holder	-	660-1-61	1
Battery Box	-	660-1-33	2
Transformer (with Bracket)	T1	5-14-183	1
IC 14521	U1	62-89	1
Transistor 2N5064	Q1	23-149	1
Transistor 2N3565	Q2	23-66	1
Diode IN4005	CR2, 3, 4	52-91	3
Diode IN5342B	CR100	52-296	1
Diode IN914B	CR1	52-219	1
Capacitor 0.01 μF, 200 V	C1	21-94	1
Capacitor 4000 μF, 16 V	C100	21-2083	1
Capacitor, 100 μF, 25 V	C2	21-513	1

Description	Reference Designator	Part No.	No. In Assembly
Resistor, 24 Ω, 1 W, 5%	R1	185-466	1
Resistor, 2, 7 Ω, 5 W, 5%	R2	185-1798	1
Resistor, 75 k Ω, ¼ W, 5%	R3, 4,7	185-2438	3
Resistor, 1 M Ω, ¼ W, 5%	R5, 6	185-2422	2
IC Socket, 16 pin	U1	33-84	1
Battery, 67.5 V	-	16-24	1
Dry Cell, 1.25 V	-	16-32	4
Battery Box Cover	-	720-121	2
Fuse 1/8 A, 250 V; Slo Blo	F1	19-51	1
Logic Board Assembly			
PC Board Proc	-	660-1-16	1
Transformer	-	660-1-26	1
Crystal, 2097 kHz	-	660-1-35	1
Capacitor, 0.001 μF, 200 V	C9	21-2048	1
Capacitor, 0.0047 μF, 200 V	C8	21-893	1
Capacitor, 390 pF, 500 V	C14	21-719	1
Capacitor, 100 pF, 500 V	C1, 3,15	21-715	3
Capacitor, 20 pF, 500 V	C16, 17	21-712	2
Capacitor, 220 pF, 500 V	C2, 4,5,6,11,13	21-690	6
Capacitor, 1000 pF, 500 V	C7	21-725	1
Capacitor, 1 μF, 35 V	C10	21-932	1
Capacitor, 0.01 μF, 200 V	C12	21-94	1
Diode 1N914	CR1	52-219	1
Resistor, 69.8 k Ω, ¼ W, 1%	R7	185-3540	1
Resistor, 30. 1 k Ω, ¼ W, 1%	R8	185-2498	1
Resistor, 51 k Ω, ¼ W, 5%	R3, 8,11,16,20,57	185-1461	6
Resistor, 1 k Ω, ¼ W, 5%	R5, 10	185-2412	2
Resistor, 330 Ω, ¼ W, 5%	R12, 13,14	185-2400	3
Resistor, 200 Ω, ¼ W, 5%	R9	185-1448	1
Resistor 5.1 k Ω, ¼ W, 5%	R54	185-2415	1
Resistor, 3.3 k Ω, ¼ W, 5%	R55	185-2414	1
Resistor, 10 M Ω, ¼ W, 5%	R19, 22	185-1433	2
Resistor, 510 k Ω, ½ W, 5%	R15, 17	185-1434	2
Resistor, 150 k Ω, ¼ W, 5%	R6	185-1462	1
Resistor, 10 k Ω, ¼ W, 5%	R56	185-1420	1
Resistor, 75 k Ω, ¼ W, 5%	R2, 4	185-2438	2
Resistor, 22 k Ω, ¼ W, 5%	R1, 21	185-2466	2
Resistor, 20 MΩ, ½ W, 5%	R18	185-3435	1
Resistor, 1 MΩ, ¼ W, 5%	RI0	185-2422	1
IC MC 14572CP	U4	62-95	1
IC MC 14528Cp	U5	62-90	1

Description	Reference Designator	Part No.	No. In Assembly
IC MC 14521CP	U22	62-89	1
IC MC14023CP	U8	62-94	1
IC MC14518CP	U3	62-88	1
IC CD4028AE	U9, 10, 11	62-85	3
IC CD4002AE	U 13, 14,15,17	62-80	4
IC CD4001AE	U1, 2,6,7,21	62-62	5
IC CD4013AE	U19, 20	62-82	2
IC CD4025AE	U16	62-84	1
IC CD40 11AE	U18, 12	62-63	2
Transistor 2N3565	Q1, 4,5	23-66	3
Transistor 2N4249	Q3	23-90	1
Transistor 2N3643	Q2	23-69	1
	Display Board Assembly		
PC Board, Proc	-	660-1-11	1
Resistor, 150 Ω, ¼ W, 5%	R38, 40,42,43,46,48	185-2445	6
Resistor, 1.5 k Ω, ¼ W, 5%	R37, 39,41,44,45,47	185-2435	6
Resistor, 51 k Ω, ¼ W, 5%	R31, 33, 35	185-1467	3
Resistor, 100 k Ω, ¼ W, 5%	R34, 36	185-1438	2
Resistor, 5.1 k Ω, ¼ W, 5%	R32, 53	185-2415	2
Resistor, 340 k Ω, ¼ W, 1%	R24, 61	185-2457	2
Resistor, 20.4 M Ω, ¼ W, 5%	R59	185-3758 (MDX 400)	1
Resistor, 10 k Ω, ¼ W, 5%	R25, 29	185-1420	2
Resistor, 10 k Ω, ¼ W, 1%	R26	185-2559	1
Resistor, 30.1 k Ω, ¼ W, 1%	R27	185-2498	1
Resistor, 51 Ω, ¼ W, 5%	R22	185-1437	1
Resistor, 22 k Ω, ¼ W, 5%	R28, 30	185-2466	2
Resistor, 47 Ω, ½ W, 5%	R60	185-1723	1
Resistor, Variable, 10 k Ω	R23	22-359	1
Relay	K1	82-32	1
IC CD4001AE	U23	62-62	1
IC MC14518CP	U24, 25, 26	62-88	3
IC MC14511CP	U27, 28,29	62-87	3
IC MC3302P	U22	62-96	1
Diode 1N52299	CR7	52-259	1
Diode 1N5221B	CR2	52-255	1
Diode 1N914B	CR3, 4,5,6	52-219	4
Capacitor, 3300 pF ± 5%	C19, 20,21,22,23,24	21-323	6
Capacitor, 22; μF, 15 V, 10%	C17	21-799	1
Capacitor, 39 μF, 10 V, 10%	C16	21-2059	1
Transistor 2N3643	Q6, 8,10, 12,14,16	32-69	6
Transistor 2N3565	Q7, 9,11,13,15,17	23-66	6

Transistor 2N3645	Q19, 18	23-37	2
Potentiometer, ½ M Ω	R52	22-360	1
Rotary Switch	S1	660-1-34	1
Toggle Switch	S2	11-115	1
Miniature Lamp	-	17-59	6
Connector Cable	J4, 3	660-1-36	2
Display Board Assembly	-	660-1-40	1

3.5 Specifications for 660-1 Readout/Logic Unit

Range — 3 decade auto ranging and auto indicating including proper decimal placement and proper measurement units. See probe specifications for specific ranges.

Calibration — Not necessary. Response depends on frequency of internal crystal oscillator (± 0.01% from 10° to 40°C).

Battery Complement — One 67.5 V, collecting potential (shelf-life) and 4 rechargeable 1.25 V “D” size batteries for instrument power.

Battery Charge Time — 10 hrs to full recharge at 20°C (instrument “OFF”). Built-in recharging circuit automatically switches to “trickle charge” after 10 hrs to avoid battery damage.

Accuracy — Depends only on crystal oscillator frequency in “Exposure Rate” mode (see “Calibration” above). Accuracy of readout unit not applicable in “Exposure” mode. See probe specs for system measurement accuracy.

AC Recharge Input — 117 V ± 15% 50/60 hertz. Power cord furnished.230 V ± 15% available on special request.

Controls — Function Switch - Selects off, total exposure or exposure rate modes. Reset switch - For use in total exposure mode-selects run, stop or reset. Intensity Knob - Controls readout brightness.

Battery Life — 6 hrs between charges at 20°C with normal usage. Automatic shut-off when charge drops below usable level.

Size — 5-½ by 8-½ by 4-½ inches high (13.9 by 21.5 by 11 cm).

Weight — Approximately 7 lbs. Shipping weight: Complete system with *two* probes - Approximately 30 lbs.

Error Prevention Logic — Low battery-Auto turn-off. Overrange-3 flashing eights at approximately three times normal flashing rate. Excessive Intensity-flashing numbers with alternate mR and R units at 2 times normal flashing rate. Applies to instantaneous or steady state intensities. Probe disconnected-same as excessive intensity. Items Furnished: The 660-1 readout/logic unit includes a black, foam-lined vinyl covered carrying case, manual and power cord.

3.6 Specifications for 660-3 Beam Measurement Probe

Type	Circular parallel plate ion chamber with assured atmospheric communication.
Range	Total Exposure: 0.001 R to 99.9 R Exposure Rate: -0.01 R/min to 999 R/min
Measurement Area	10 cm^2
Precision	Within 1% short term and 2%/year at 20 ± 2°C exclusive of air density or energy response variations.
Standard Calibration	^{137}Cs within 5%. Additional calibration points available on special order from Fluke Biomedical commercial calibration laboratory or the RCL.
Intensity Limit	40 R/sec
Energy Response	Within 10% from 20 to 1350 keV
Relative Humidity	0-95% or better
Temperature Range	Maximum sensitivity change of ± 10% from 10° to 40°C, exclusive of air density correction.
Size	Overall Length: 28.3 cm Overall Width: 6.36 cm (OD of chamber) Overall Depth: 3.18 cm (OD of shank)
Power Requirements	From 660-1 Readout/Logic Unit
Cable Length	2 feet and 10 feet standard low impedance type. Longer cables available on special order up to several hundred feet.
Weight	2 lbs (1 Kg)

3.7 Specifications for 660-4 Beam Measurement Probe

Type	Circular, parallel plate ion chamber with assured atmospheric communication.
Range	Total Exposure: 0.1 mR to 9.99 R Exposure Rate: 0.001 R/min to 99.9 R/min
Measurement Area	10 cm^2
Precision	Within 1% short term and 2%/year at 20 ± 2°C exclusive of air density or energy response variations.
Standard Calibration	^{137}Cs within 5%. Additional calibration points available on special order from Fluke Biomedical commercial calibration laboratory or the RCL.
Intensity Limit	1.8 R/s
Energy Response	Within 10% from 20 to 660 keV and within 20% from 20 to 1250 keV
Relative Humidity	0-95% or better
Temperature Range	Maximum sensitivity change of 10% from 10° to 40°C, exclusive of air density correction.
Size	Overall Length: 28.3 cm Overall Width: 6.36 cm (OD of chamber) Overall Depth: 3.18 cm (OD of shank)
POWER Requirements	From 660-1 Readout/Logic Unit
Cable Length	2 feet and 10 feet standard low impedance type. Longer cables up to several hundred feet available on special order.
Weight	2 lbs (1 kg)

3.8 Specifications for 660-5 Health Physics and Scatter Measurement Probe

Type	Circular, parallel plate ion chamber with assured atmospheric communication.
Range	Total Exposure: 0.001 mR to 99.9 mR Exposure Rate: 0.1 mR/h to 9.99 R/h
Measurement Area	100 cm^2
Precision	Within 1% short term and 2%/year at 20 ± 2°C exclusive of air density or energy response variations.
Standard Calibration	^{137}Cs with 5%. Additional calibration points available on special order from Fluke Biomedical commercial calibration laboratory or the RCL.
Intensity Limit	0.003 R/sec.
Energy Response	Within 20% from 30 keV to 1250 keV (front or side)
Relative Humidity	0-95% or better
Temperature Range	Maximum sensitivity change of 10% from 10° to 40°C, exclusive of air density correction.
Size	Overall Length: 38.3 cm Overall Width: 12.8 cm (Depth of chamber) Overall Depth: 4.83 cm (Depth of chamber)
Power Requirements	From 660-1 Readout/Logic Unit
Cable	2 feet and 10 feet standard low impedance type. Longer cables up to several hundred feet available on special order.
Weight	2 lbs (1 kg)

3.9 Proper Care and Storage of Ion Chamber Instruments Guidelines

In areas where the humidity is exceptionally high, Ion Chamber instruments may become saturated with moisture causing them to fail. To avoid this occurrence, store instruments in a typical dry box (See Figure 3-1). Smaller instruments can be stored in polyethylene bags with desiccant packet or a dry box with either a l00-watt light bulb or renewable desiccant packet.

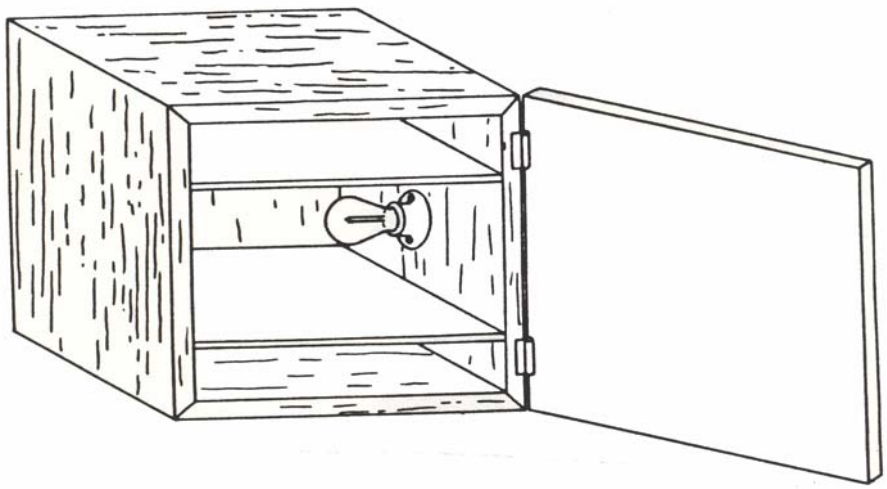

*Figure 3-1.*Sample Dry Box With Light Bulb and Shelves (wood materials used)*

***NOTE**

This particular dry box is an artist's presentation and not necessarily in existence. The customer may use a different type of dry box so long as it is applicable to their instruments and needs.

Fluke Biomedical
Radiation Management Services

6045 Cochran Road
Cleveland, Ohio 44139
440.498.2564

www.flukebiomedical.com/rms