Advanced Test Equipment Rentals
www.atecorp.com 800-404-ATEC (2832)

Errata

Title & Document Type: 3325A Synthesizer/Function Generator Operating and Service Manual

Manual Part Number: 03325-90002

Revision Date: May 1984

HP References in this Manual

This manual may contain references to HP or Hewlett-Packard. Please note that Hewlett-Packard's former test and measurement, semiconductor products and chemical analysis businesses are now part of Agilent Technologies. We have made no changes to this manual copy. The HP XXXX referred to in this document is now the Agilent XXXX. For example, model number HP8648A is now model number Agilent 8648A.

About this Manual

We've added this manual to the Agilent website in an effort to help you support your product. This manual provides the best information we could find. It may be incomplete or contain dated information, and the scan quality may not be ideal. If we find a better copy in the future, we will add it to the Agilent website.

Support for Your Product

Agilent no longer sells or supports this product. You will find any other available product information on the Agilent Test & Measurement website:

www.tm.agilent.com

Search for the model number of this product, and the resulting product page will guide you to any available information. Our service centers may be able to perform calibration if no repair parts are needed, but no other support from Agilent is available.

Agilent Technologies

HEWLETT PACKARD

OPERATING AND SERVICE MANUAL

MODEL 3325A
SYNTHESIZER/FUNCTION GENERATOR

Serial Numbers: All

IMPORTANT NOTICE

This manual applies to all instruments. Earlier versions of the 3325A, however, may differ in design from the instruments this revision documents directly. Design and documentations changes are identified by a Δ symbol. The delta symbols refer servicing personnel to the backdating section (Section VII) where specific information regarding the change is presented.

WARNING

To prevent potential fire or shock hazard, do not expose equipment to rain or moisture.

Manual Part No. 03325-90002

Microfiche Part No. 03325-90052

© Copyright Hewlett-Packard Company 1978, 1981, 1984
P.O. Box 69, Marysville, Washington 98270

Printed: May 1984

HEWLETT PACKARD

SAFETY SUMMARY

The following general safety precautions must be observed during all phases of operation, service, and repair of this instrument. Failure to comply with these precautions or with specific warnings elsewhere in this manual violates safety standards of design, manufacture, and intended use of the instrument. Hewlett-Packard Company assumes no liability for the customer's failure to comply with these requirements. This is a Safety Class 1 instrument.

GROUND THE INSTRUMENT

To minimize shock hazard, the instrument chassis and cabinet must be connected to an electrical ground. The instrument is equipped with a three-conductor ac power cable. The power cable must either be plugged into an approved three-contact electrical outlet or used with a three-contact to two-contact adapter with the grounding wire (green) firmly connected to an electrical ground (safety ground) at the power outlet. The power jack and mating plug of the power cable meet International Electrotechnical Commission (IEC) safety standards.

DO NOT OPERATE IN AN EXPLOSIVE ATMOSPHERE

Do not operate the instrument in the presence of flammable gases or fumes. Operation of any electrical instrument in such an environment constitutes a definite safety hazard.

KEEP AWAY FROM LIVE CIRCUITS

Operating personnel must not remove instrument covers. Component replacement and internal adjustments must be made by qualified maintenance personnel. Do not replace components with power cable connected. Under certain conditions, dangerous voltages may exist even with the power cable removed. To avoid injuries, always disconnect power and discharge circuits before touching them.

DO NOT SERVICE OR ADJUST ALONE

Do not attempt internal service or adjustment unless another person, capable of rendering first aid and resuscitation, is present.

DO NOT SUBSTITUTE PARTS OR MODIFY INSTRUMENT

Because of the danger of introducing additional hazards, do not install substitute parts or perform any unauthorized modification to the instrument. Return the instrument to a Hewlett-Packard Sales and Service Office for service and repair to ensure that safety features are maintained.

DANGEROUS PROCEDURE WARNINGS

Warnings, such as the example below, precede potentially dangerous procedures throughout this manual. Instructions contained in the warnings must be followed.

WARNING

Dangerous voltages, capable of causing death, are present in this instrument. Use extreme caution when handling, testing, and adjusting.

SAFETY SYMBOLS

General Definitions of Safety Symbols Used On Equipment or In Manuals.

Instruction manual symbol: the product will be marked with this symbol when it is necessary for the user to refer to the instruction manual in order to protect against damage to the instrument.

Indicates dangerous voltage (terminals fed from the interior by voltage exceeding 1000 volts must be so marked).

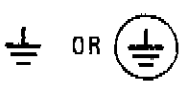

Protective conductor terminal. For protection against electrical shock in case of a fault. Used with field wiring terminals to indicate the terminal which must be connected to ground before operating equipment.

Low-noise or noiseless, clean ground (earth) terminal. Used for a signal common, as well as providing protection against electrical shock in case of a fault. A terminal marked with this symbol must be connected to ground in the manner described in the installation (operating) manual, and before operating the equipment.

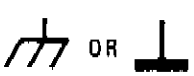

Frame or chassis terminal. A connection to the frame (chassis) of the equipment which normally includes all exposed metal structures.

Alternating current (power line).

Direct current (power line).

Alternating or direct current (power line).

WARNING

The WARNING sign denotes a hazard. It calls attention to a procedure, practice, condition or the like, which, if not correctly performed or adhered to, could result in injury or death to personnel.

CAUTION

The CAUTION sign denotes a hazard. It calls attention to an operating procedure, practice, condition or the like, which,if not correctly performed or adhered to, could result in damage to or destruction of part or all of the product.

NOTE:

The NOTE sign denotes important information. It calls attention to procedure, practice, condition or the like, which is essential to highlight.

TABLE OF CONTENTS

Section Page

I. GENERAL INFORMATION 1-1
1-1. Introduction 1-1
1-5. Instrument Description 1-1
1-9. Specifications 1-1
1-11. Supplemental Operating Information . 1-1
1-13. Remote Control 1-1
1-15. Options 1-1
1-17. Accessories Supplied 1-5
1-19. Accessories Available 1-5
1-21. Instrument and Manual Identification 1-6
1-24. Safety Considerations 1-6
1-27. Recommended Test Equipment 1-6

Section Page

II. INSTALLATION 2-1
2-1. Introduction 2-1
2-3. Initial Inspection 2-1
2-5. Preparation For Use 2-1
2-6. Power Requirements 2-1
2-8. Line Voltage Selection 2-1
2-10. Power Cable 2-1
2-12. HP-IB Connections 2-1
2-15. 3325A Listen/Talk Address 2-3
2-17. HP-IB Description 2-4
2-19. Connecting Oven Option 001 2-4
2-21. Operating Environment 2-4
2-23. Cooling System 2-4
2-26. Bench Operation 2-4
2-28. Rack Mounting 2-4
2-30. Storage and Shipment 2-4
2-31. Environment 2-4
2-33. Instrument Identification 2-6
2-35. Packaging 2-6

Section Page

III. OPERATION 3-1
3-1. Introduction 3-1
3-3. Panel Features 3-3
3-5. Power/Warm-Up 3-3
3-8. Initial Conditions 3-3
3-10. Self Test 3-3
3-12. Front/Rear Signal Output 3-3
3-14. Sync Output 3-3
3-16. External Reference Input 3-4
3-18. 10MHz Oven Option 001 3-4
3-20. Manual Programming 3-4
3-22. Clear Display 3-4

Section Page

3-24. Entry Errors 3-4
3-26. Function Selection 3-4
3-28. Frequency Entry 3-4
3-30. Frequency Limits 3-4
3-32. Frequency Display and Resolution . 3-5
3-34. Auxiliary Output (Sine Function Only) 3-5
3-36. Amplitude Entry 3-5
3-39. Amplitude Calibration 3-5
3-41. High Voltage Output Option 002 . . 3-6
3-43. DC Offset 3-6
3-46. Phase Entry 3-7
3-49. Frequency Sweep 3-7
3-55. Sweep Marker 3-9
3-58. Sweep X Drive Output 3-10
3-60. Sweep Z Blank Output 3-10
3-62. Amplitude Modulation 3-10
3-66. Phase Modulation 3-11
3-68. Modify Keys 3-11
3-70. Store and Recall 3-11
3-72. Operator's Checks 3-11
3-74. Self Test 3-11
3-76. Output Checks 3-11
3-78. Operator's Maintenance 3-12
3-81. HP-IB Operation 3-12
3-83. General HP-IB Description 3-13
3-88. Definition of HP-IB Terms and Concepts 3-13
3-89. Basic Device Communication Capability 3-14
3-91. Message Definitions 3-14
3-93. 3325A Response to Messages 3-14
3-95. HP-IB Work Sheet 3-14
3-97. HP-IB Addressing 3-14
3-100. 3325A Remote Programming 3-14
3-101. 3325A HP-IB Capabilities 3-14
3-103. Developing an HP-IB Program . . . 3-15
3-107. Universal and Addressed Commands 3-17
3-109. Placing the 3325A in Remote 3-17
3-111. The 3325A Address 3-17
3-113. 3325A Data Message Formats 3-17
3-115. Data Transfer Mode 3-20
3-118. Programming Data Transfer Mode 3-21
3-120. Programming Entry Parameters . . . 3-21
3-122. Programming Waveform Function 3-21
3-124. Programming Binary (On or Off) Functions 3-22
3-126. Programming Selection Functions . 3-22

TABLE OF CONTENTS (Cont'd)

3-128. Programming Execution Functions 3-22
3-130. Programming Amplitude Units Conversion 3-23
3-132. Programming Storage Registers ... 3-23
3-134. Service Requests 3-23
3-136. Serial Poll 3-23
3-138. Status Byte 3-24
3-140. Busy Flag 3-24
3-142. Sweep Flag 3-24
3-144. Masking or Enabling Service Requests 3-24
3-146. Interrogating Program Errors 3-24
3-148. Interrogating Entry Parameters ... 3-25
3-150. Interrogating Function

3-152. Interrogating Miscellaneous Parameters 3-26
3-154. Using the Interrogate Capability .. 3-26
3-156. 3325A Programming Procedure ... 3-27

Appendix A. Meta Messages Block Diagrammed A-1

Appendix B. Programming The Model 3325A with the 9825A Calculator B-1

Section Page
IV. PERFORMANCE TESTS 4-1
4-1. Introduction 4-1
4-3. Calculator-Controlled Test 4-1
4-5. Operational Verification 4-1
4-8. Required Test Equipment 4-1
4-10. Self Test 4-1
4-12. Sine Wave Verification 4-1
4-14. Square Wave Verification 4-2
4-16. Triangle and Ramp Verification ... 4-3
4-18. Amplitude Flatness Check 4-3
4-20. Sync Output Check 4-4
4-22. Frequency Accuracy 4-4
4-24. Output Level and Attenuator Check 4-4
4-26. Harmonic Distortion Test 4-5
4-28. Close-In Spurious Signal Test 4-6
4-30. HP-IB Interface Test 4-6
4-32. Performance Tests 4-11
4-35. Equipment Required 4-12
4-37. Harmonic Distortion Test 4-12
4-39. Spurious Signal Tests 4-13
4-41. Integrated Phase Noise Test 4-15
4-43. Amplitude Modulation Envelope Distortion Test 4-15
4-45. Square Wave Rise Time and Abberations 4-16
4-47. Ramp Retrace Time 4-16
4-49. Sync Output Test 4-16
4-51. Square Wave Symmetry 4-16
4-53. Frequency Accuracy 4-17
4-55. Phase Increment Accuracy 4-17
4-57. Phase Modulation Linearity 4-19
4-59. Amplitude Accuracy 4-20
4-61. DC Offset Accuracy (DC Only) ... 4-23
4-63. DC Offset Accuracy with AC Functions 4-25
4-65. Triangle Linearity 4-25
4-67. X Drive Linearity 4-27
4-69. Ramp Period Variation 4-29
4-71. HP-IB Interface Test 4-30

Section Page
V. ADJUSTMENTS 5-1
5-1. Introduction 5-1
5-3. Equipment Required 5-2
5-5. Adjustment Procedures 5-2
5-7. Power Supply 5-2
5-8. D/A Converter Offset 5-2
5-9. Voltage Controlled Oscillator (VCO Frequency) 5-2
5-10. Analog Phase Interpolation (API) .. 5-2
5-11. 30MHz Reference Oscillator 5-3
5-12. Option 001 High Stability Frequency Reference 5-3
5-13. Sine Wave Amplitude Calibration .. 5-3
5-14. X Drive 5-4
5-15. Amplifier Bias Adjustment 5-4
5-16. Ramp Stability 5-5
5-17. Amplitude Flatness 5-5
5-18. Mixer Spurious Signal 5-6

Section Page
VI. REPLACEABLE PARTS 6-1
6-1. Introduction 6-1
6-4. Ordering Information 6-1
6-6. Non-Listed Parts 6-1
6-8. Proprietary Parts 6-1
6-10. Printed Circuit Assemblies 6-1

Section Page
VII. MANUAL BACKDATING 7-1
7-1. Introduction 7-1
7-3. Format 7-1
7-5. Change Sheets and Service Notes 7-1
7-8. Backdating Information 7-2
7-9. Service Group A - Keyboard and Display (03325-66505) Δ1 7-2

Section		Page
7-12.	Service Group B - HP-IB Circuits (P/O 03325-66506) Δ2	7-3
7-15.	Service Group C - Control Circuits (P/O 03325-66506) Δ2	7-3
7-18.	Service Group D - Voltage Controlled Oscillator Shield (P/O 03325-66521) Δ3	7-5
7-21.	Service Group E - ÷ N.F. Counter (P/O 03325-66521) Δ3	7-7
7-24.	Service Group F - Fractional N Analog Circuits (P/O 03325-66521) Δ3	7-10
7-27.	Service Groups D and G - VCO Buffer (P/O 03325-66503), 30MHz Reference and Dividers (P/O 03325-66503) Δ4	7-12
7-31.	Service Group H - Mixer (P/O 03325-66503) Δ4	7-14
7-34.	Service Group I - D/A Converter and Sample/Hold (P/O 03325-66514) Δ5	7-15
7-37.	Service Group J - Function Circuits (P/O 03325-66514) Δ5	7-17
7-40.	Service Group K - Output Amplifier (P/O 03325-66514) Δ5	7-20
7-43.	Service Group L - Attenuator (03325-66523) and Relay Drivers (P/O 03325-66514) Δ5,Δ6	7-22
7-47.	Service Group M - Options: High Voltage Output (Opt. 002) (03325-66508) and High Stability Reference (Opt. 001) (03325-66509) Δ7	7-24
7-49.	Service Group N - Sweep Drive Circuits (P/O 03325-66514) Δ5	7-24
7-52.	Service Group O - Power Supplies (03325-66502) Δ8	7-25

Section		Page
VIII.	SERVICE	8-1
8-1.	Introduction	8-1
8-3.	Basic Theory	8-1
8-5.	Theory Of Operation	8-1
8-7.	Keyboard and Display (Service Group A)	8-1
8-12.	HP-IB Circuits (Service Group B)	8-3
8-18.	Control Circuits (Service Group C)	8-5
8-24.	Frequency Synthesis	8-8
8-43.	Reference Circuits (Service Group G)	8-12
8-51.	Mixer (Service Group H)	8-13
8-53.	D/A Converter (Service Group I)	8-13
8-59.	Function Circuits (Service Group J)	8-16
8-72.	Output Amplifier (Service Group K)	8-19
8-77.	Attenuator (Service Group L)	8-19
8-80.	High Voltage Output Option 002 (Service Group M)	8-19
8-82.	Sweep Drive Circuits (Service Group N)	8-19
8-89.	Crystal Oven Option 001 (Service Group M)	8-22
8-91.	Power Supplies (Service Group O)	8-22
8-98.	Sine Amplitude Control Path	8-23/8-24
8-99.	Amplitude Control Circuitry	8-23/8-24
8-102.	Auto Calibration Disable (ACD)	8-23/8-24
8-104.	Servicing Information	8-25
8-105.	Power Line Voltage Selection	8-25
8-107.	Fan Filter	8-25
8-109.	Adapter Cable	8-25
8-111.	Access to Reverse Side of A21, A3, A14, and A6	8-25
8-113.	A6, A14, A3, A21, A23 Connector Compatibility	8-26
8-115.	Troubleshooting Information	8-26
8-117.	Test Equipment Required	8-26
8-119.	Adjustments Required After Repair	8-28
8-121.	Basic Troubleshooting Procedures	8-28
8-124.	Orientation Of Components	8-28
8-126.	Mnemonic Dictionary	8-28
8-128.	Logic Troubleshooting by Signature Analysis	8-28

LIST OF TABLES

Table		Page
1-1.	Specifications	1-2
1-2.	Supplemental Information	1-3
1-3.	HP-IB Interface Capability	1-6
1-4.	HP-IB Response Times	1-7
1-5.	Recommended Test Equipment	1-8
2-1.	HP-IB Addresses	2-5
3-1.	Operating Information	3-1
3-2.	Amplitude Limits of AC Function	3-5
3-3.	High Voltage Output Amplitudes (Option 002)	3-6
3-4.	Maximum DC Offset with any AC Function	3-7

LIST OF TABLES (Cont'd)

Table		Page
3-5.	General Interface Management Lines	3-14
3-6.	Definition of Meta Messages	3-15
3-7.	3325A Implementation of Messages	3-16
3-8.	Interface Functions	3-16
3-9.	Summary of 3325A Programming (ASCII)	3-18
3-10.	Programming Codes	3-19
3-11.	SRQ Mask/Enable Data	3-25
4-1.	Test Equipment Required for Operational Verification	4-2
4-2.	Test Equipment Required for Performance Tests	4-11
5-1.	Test Equipment Required For Adjustments	5-1
5-2.	Padding Values	5-6
6-1.	List of Abbreviations	6-2
6-2.	List of Manufacturers	6-2
6-3.	Replaceable Parts List	6-3
7-1.	3325A Circuit Board Revisions	7-2
7-2.	A5 Board Revisions	7-2
7-3.	A6 Board Revisions	7-3
7-4.	A6 Board Revisions	7-3
7-5.	A21(A1) Board Revisions	7-6
7-6.	A21(A1) Board Revisions	7-8
7-7.	A21(A1) Board Revisions	7-10
7-8.	A3 Board Revisions	7-12
7-9.	A3 Board Revisions	7-14
7-10.	A14(A4) Board Revisions	7-16
7-11.	A14(A4) Board Revisions	7-17
7-12.	A14(A4) Board Revisions	7-21
7-13.	A23(A7) Board Revisions	7-22
7-14.	A14(A4) Board Revisions	7-24
7-15.	A2 Board Revisions	7-25
8-1.	Attenuation and Voltage Ranges	8-20
8-2.	Assembly/Cable Compatibility for Serial Numbers 1748A04250 and Below	8-25
8-3.	Test Equipment for Troubleshooting	8-26
8-4.	Adjustments Required After Repair	8-28
8-5.	Trouble Symptoms	8-29
8-6.	Mnemonic Dictionary	8-30

LIST OF ILLUSTRATIONS

Figure		Page
2-1.	Line Voltage Selection	2-2
2-2.	Power Cables	2-3
2-3.	HP-IB Connector	2-3
2-4.	Rack Mount and Handle Kits	2-6
3-1.	Front and Rear Panel Controls	3-2
3-2.	Maximum DC Offset with AC Functions	3-8
3-3.	Interface Connections and Bus Structure	3-13
4-1.	Harmonic Distortion Verification (High Voltage Output)	4-5
4-2.	Mixer Spurious Test	4-13
4-3.	Integrated Phase Noise Test	4-14
4-4.	AM Envelope Distortion	4-15
4-5.	Square Wave Symmetry	4-17
4-6.	Frequency Accuracy	4-18
4-7.	Phase Increment Accuracy	4-18
4-8.	Phase Modulation Linearity	4-19
4-9.	Amplitude Accuracy and Flatness	4-24
4-10.	Triangle and Ramp Linearity Test	4-26
4-11.	Triangle Linearity Test	4-27
4-12.	X Drive Linearity Test	4-29
4-13.	X Drive Linearity Test	4-30
4-14.	Ramp Reset Waveform	4-30
5-1.	Ramp Reset Waveform	5-5
5-2.	Amplitude Flatness Adjustment	5-6
5-3.	Location of Adjustments	5-7
6-1.	Location of Parts	6-31/6-32
7-1.	Processor Interrupt Circuitry (Serial Numbers 1748A00230 and Below)	7-4
7-2.	Schematic and Board Location of R11 and R12 (Serial Numbers 1748A02600 and Below)	7-4
7-3.	VCO Circuitry - Serial Numbers 1748A02475 and Below	7-6
7-4.	VCO Circuitry - Serial Numbers 1748A03226 to 1748A07390	7-7
7-5.	HINV Clocking Circuitry - Serial Numbers 1748A00230 and Below	7-8
7-6.	A21U8 Gating Circuitry - Serial Numbers 1748A02475 and Below	7-9
7-7.	A21U8 Gating Circuitry - Serial Numbers 1748A02476 to 1748A07390	7-9
7-8.	Integrator and Phase Modulation Circuitry - Serial Numbers 1748A02475 and Below	7-10
7-9.	Sample/Hold Circuitry (Serial Numbers 1748A02475 and Below)	7-11

TABLE OF CONTENTS (Cont'd)

Figure Page

7-10. U14 Biasing Circuitry (Serial Numbers 1748A00620 and Below) 7-12
7-11. Sine Amplitude Control and Amplitude Modulation Circuitry (Serial Numbers 1748A04675 and Below) 7-13
7-12. Mixer Driver Circuitry (Serial Numbers 1748A04675 and Below) 7-15
7-13. DC Offset Control (Serial Numbers 1748A01075 and Below) 7-18
7-14. DC Offset Control (Serial Numbers 1748A08790 to 1748A01076) 7-18
7-15. Amplitude Control Circuitry (Serial Numbers 1748A05825 and Below) ... 7-19
7-16. Amplitude Control Circuitry (Serial Numbers 1748A05826 to 1748A08790) 7-20
7-17. Output Amplifier (Serial Numbers 1748A01900 and below) 7-21
7-18. Relay Drive Circuitry (Serial Numbers 1748A01075 and Below) 7-23
7-19. Location Of F2 (Serial Numbers 1748A05825 to 1748A01076) 7-26
7-20. ±15V Regulator (Serial Numbers 1748A01075 and Below) 7-26
8-1. Simplified Block Diagram 8-2
8-2. Basic Block Diagram, Logic Circuits . 8-2
8-3. Keyboard and Display Block Diagram 8-3
8-4. HP-IB Data Input Path 8-4
8-5. HP-IB Data Output Path 8-4
8-6. HP-IB Management and Handshake . 8-5
8-7. Basic Block Diagram of Control Circuits 8-6
8-8. Phase Lock Loop 8-7
8-9. Phase Detector 8-8
8-10. Integrator Output 8-9
8-11. Addition of D/A Converter and Pulse Remove Blocks 8-9
8-12. Phase Accumulation 8-10
8-13. Divide By N Counter 8-11
8-14. External Reference Phase Lock Loop Block Diagram 8-12
8-15. Level Control and Amplitude Modulation 8-13
8-16. Mixer Diagram 8-14
8-17. Preset Counters 8-14
8-18. D/A Converter 8-15
8-19. DAC Sample/Hold 8-15
8-20. Enable Signals For Function Switching 8-17
8-21. Simplified Illustration of Triangle Generation 8-18

Figure Page

8-22. Simplified Illustration of Ramp Generation 8-18
8-23. Marker and X Drive Start-Stop Flip-Flops 8-20
8-24. X Drive Ramp Output 8-21
8-25. Power Supply Standby/On Circuit .. 8-22
8-26. Sine Amplitude Control Path .. 8-23/8-24
8-27. Adapter Cable 8-27
8-28(a). Access to Reverse Side of Assemblies 8-27
8-28(b). Basic Troubleshooting Procedure .. 8-31
8-29. Signature Analysis Test 4 ..... 8-A-5
8-30. Keyboard and Display, A5 .. 8-A-7/8-A-8
8-31(a). Signature Analysis Test 3... 8-B-5/8-B-6
8-31(b). Signature Analysis Test 3... 8-B-7/8-B-8
8-31(c). Signature Analysis Test 3.....3 8-B-9
8-32. HP-IB Circuits, A6 ..... 8-B-11
8-33(a). Signature Analysis Test 1 8-C-19/8-C-20
8-33(b). Signature Analysis Test 1 8-C-21/8-C-22
8-34(a). Signature Analysis Test 2 8-C-25/8-C-26
8-34(b). Signature Analysis Test 2 8-C-27/8-C-28
8-35(a). Signature Analysis Test 5 8-C-31/8-C-32
8-35(b). Signature Analysis Test 5 8-C-33/8-C-34
8-35(c). Signature Analysis Test 5 ..... 8-C-35
8-36. Control Circuits, A6 ..... 8-C-37
8-37. VCO, A21, and VCO Buffer, A3 ..... 8-D-7/8-D-8
8-38. ÷ N.F. Counter, A21 ..... 8-E-3/8-E-4
8-F-1. TP9 and TP10 Waveforms 8-F-4
8-39. Fractional N Analog, A21 ... 8-F-5/8-F-6
8-G-1. Sine Amplitude Control Path 8-G-2
8-40. 30MHz Reference and Dividers, A3 ..... 8-G-3/8-G-4
8-H-1. Sine Amplitude Control Path 8-H-2
8-41. Mixer, A3 ..... 8-H-3/8-H-4
8-I-1. Sine Amplitude Control Path 8-I-3
8-42. D/A Converter and Sample/Hold, A14 ..... 8-I-5/8-I-6
8-J-1. Sine Amplitude Control Path 8-J-4
8-43. Function Circuits, A14 ..... 8-J-7/8-J-8
8-K-1. Sine Amplitude Control Path 8-K-2
8-44. Output Amplifier, A14 ..... 8-K-5/8-K-6
8-45. Relay Drivers, A14, and Attenuator, A23 ..... 8-L-3/8-L-4
8-46. High Voltage Output Option 002 A8 ..... 8-M-3/8-M-4
8-47. High Stability Reference Option 001, A9 ..... 8-M-5/8-M-6
8-48. Sweep Drive Circuits, A14 .. 8-N-3/8-N-4
8-49. Power Supplies, A2 ..... 8-O-3/8-O-4
8-50. Function Block Diagram 8-P-1/8-P-2

SECTION I
GENERAL INFORMATION

1-1. INTRODUCTION.

1-2. The Operating and Service Manual contains information required to install, operate, test, adjust, and service the Hewlett-Packard Model 3325A Synthesizer/Function Generator. The Operating Manual supplement is a copy of the first three sections of the Operating and Service Manual, plus the Operational Verification procedures from Section IV. The supplement should be kept with the instrument for use by the operator. The part numbers of both the Operating and Service Manual and the Operating Manual supplement are shown on the title pages.

1-3. Also shown on the title page of this manual is a Microfiche part number. This number can be used to order 4 × 6 inch transparencies of the Operating and Service Manual. Each Microfiche contains up to 96 photo-duplicates of the manual pages. The Microfiche package includes the latest Manual Changes supplement as well as pertinent Service Notes.

1-4. Additional copies of the Operating and Service Manual, Operating Information Supplement, or Service Notes can be ordered through your nearest Hewlett-Packard Sales and Service Office. (A list of these offices is provided at the end of this manual.)

1-5. INSTRUMENT DESCRIPTION.

1-6. The Model 3325A Synthesizer/Function Generator produces the following signals at a minimum frequency of 1 μHz and maximum frequency of:

Sine wave	20 MHz
Square wave	10 MHz
Triangle	10 kHz
Positive slope ramp	10 kHz
Negative slope ramp	10 kHz

Frequency may be selected with up to eleven digits of resolution. Output amplitude is 1 mV to 10 V peak-to-peak. The output level may also be selected or displayed in V rms or in dBm (50 ohms). Any function may be dc offset up to ±4.5 V, or the output may be dc only up to ±5 V. An optional high voltage output produces up to 40 V p-p into ≥500 ohms load.

1-7. Frequency sweep of all functions is provided in linear or log sweep, at sweep times of 10 milliseconds to 99.99 seconds for linear sweep. Maximum time for log sweep is 99.99 seconds and minimum time is 2 seconds for single log sweep and 0.1 second for continuous log sweep. Single linear sweep may be up or down, while continuous sweep is up/down/up, etc., in the linear mode and up/up, etc., in log mode.

1-8. The Model 3325A is fully programmable through the rear panel Hewlett-Packard Interface Bus (HP-IB) connector. A device such as a programmable calculator is capable of remotely controlling the 3325A. Interface information is given in Section II of this manual, and programming information is in Section III.

1-9. SPECIFICATIONS.

1-10. Instrument specifications are listed in Table 1-1. These specifications are the performance standards or limits against which the instrument is tested. Any changes in specifications due to manufacturing, design or traceability to the U.S. National Bureau of Standards are included in Table 1-1 of this manual and/or the Manual Changes Supplement.

1-11. SUPPLEMENTAL OPERATING INFORMATION.

1-12. Table 1-2 contains information describing general operating characteristics of the 3325A. This information is supplemental operating information and is not to be considered as specifications.

1-13. REMOTE CONTROL.

1-14. Table 1-3 lists the HP-IB interface capabilities of the Model 3325A in conformity with IEEE Standard 488-1978, "Standard Digital Interface for Programmable Instrumentation". HP-IB response times are given in Table 1-4.

1-15. OPTIONS.

1-16. The following options extend the frequency stability and output amplitude capabilities of the Model 3325A:

Option 001	High Stability Frequency Reference
Option 002	High Voltage Output

The following options indicate the line voltage to which the instrument was set at the factory:

Option 100	Nominal 100 V ac
Option 120	Nominal 120 V ac
Option 220	Nominal 220 V ac
Option 240	Nominal 240 V ac

Table 1-1. Specifications.

FUNCTIONS AND FREQUENCIES

Sine Wave:
Signal Output (Front or Rear Panel):
0.000 001 Hz to 20 999 999.999 Hz

Auxiliary Output (Rear Panel):
21 000 000.000 Hz to 60 999 999.999 Hz
Underrange to 19 000 000.001 Hz

Square Wave: 0.000 001 Hz to 10 999 999.999 Hz

Triangle: 0.000 001 Hz to 10 999.999 999 Hz

Positive and Negative Slope Ramp:
0.000 001 Hz to 10 999.999 999 Hz

FREQUENCY RESOLUTION

1 μHz for frequencies below 100 kHz
1 mHz for frequencies 100 kHz and higher

FREQUENCY ACCURACY (Standard Instrument)

$\pm 5 \times 10^{-6}$ of selected value (20° to 30°C)

FREQUENCY STABILITY (Standard Instrument)

$\pm 5 \times 10^{-6}$ per year (20° to 30°C)

SIGNAL CHARACTERISTICS

Sine Wave:
Harmonic Distortion relative to the amplitude of the fundamental frequency at full output on each range

Fundamental Frequency	No Harmonic Greater Than
0.1 Hz to 50 kHz	−65 dB
50 kHz to 200 kHz	−60 dB
200 kHz to 2 MHz	−40 dB
2 MHz to 15 MHz	−30 dB
15 MHz to 20 MHz	−25 dB

Spurious: All non-harmonically related output signals will be more than 70dB below the carrier (-60dB with DC offset), or less than -90dBm, whichever is greater.

Phase Noise: ≥ -60dB (Option 001 Only) for a 30kHz band centered on a 20MHz carrier (excluding ± 1Hz about the carrier).

Square Wave:
Rise/Fall Time: ≤ 20 nanoseconds, 10% to 90% at full output

Symmetry: ≤ .02% of period + 3 nanoseconds

Overshoot: ≤ 5% of peak to peak amplitude at full output

Triangle:

Linearity, 10% to 90%, best fit straight line:
± 0.05% of full p-p output for each range

Ramps (Positive or Negative Slope):

Linearity, 10% to 90%, best fit straight line: ± 0.05% of full p-p output for each range

Retrace Time: ≤ 3 microseconds, 90% to 10%

Ramp Period Variation: < ± 1% of period, maximum

AMPLITUDE

Amplitude Accuracy with no Attenuation (Attenuator range 1) into 50 ohm Load. (No D.C. offset)

Function and frequency range	Tolerance relative to programmed amplitude
Sine Wave .001 Hz to 100 kHz	± 0.1 dB
Square Wave .001 Hz to 100 kHz	± 1.0%
Triangle .001 Hz to 2 kHz 2 kHz to 10 kHz	± 1.5% ± 5%
Ramps .001 Hz to 500 Hz 500 Hz to 10 kHz	± 1.5% ± 10%

Flatness with no attenuation (Attenuator Range 1) into a 50 Ohm load	Tolerance relative to programmed amplitude at 1 kHz
Sine Wave 100 kHz to 20 MHz	± 0.3 dB
Square Wave 100 kHz to 10 MHz	± 10%

Amplitude accuracy with D.C. offset and no attenuation (Range 1) into a 50 ohm load.	Tolerance relative to programmed amplitude.
Sine Wave .001 Hz to 100 kHz	± 0.3 dB
Square .001 Hz to 100 kHz	± 3%
Triangle .001 Hz to 2 kHz 2 kHz to 10 kHz	± 4% ± 6%
Ramps .001 Hz to 500 Hz 500 Hz to 10 kHz	± 4% ± 11%

Attenuator Accuracy (these errors are additive with the amplitude accuracy errors)	Tolerance relative to programmed amplitude.
.001 Hz to 20 kHz Attenuator Range 1	No Error
.001 Hz to 100 kHz Attenuator ranges 2 through 8	± 0.1 dB
100 kHz to 10 MHz Attenuator ranges 2 through 8	± 0.2 dB
10 MHz to 20 MHz Attenuator ranges 2 through 4 Attenuator ranges 5 through 8	± 0.2 dB ± 0.5 dB

Table 1-1. Specifications (Cont'd).

Accuracy of DC Offset (into 50 ohms):

DC Only (No AC Function): ± 0.4% of full peak output for each range*

*Except lowest attenuator range where accuracy is ± 20 μV.

DC + AC, ≤1 MHz: ±1.2%, Ramps ±2.4%

DC + AC, >1 MHz: ±3%

AMPLITUDE MODULATION (of Sine Function only)

Modulation Envelope Distortion: −30 dB to 80% modulation at 1 kHz, 0 V dc Offset

PHASE OFFSET

Range: ±719.9° with respect to arbitrary starting phase, or assigned zero phase

Resolution: 0.1°
Stability: ± 1° phase/°C
Increment Accuracy: ±0.2°

PHASE MODULATION

Linearity (Sine Function): ±0.5%, best fit straight line

SYNC OUTPUT

Output Levels into 50 ohms:
Square wave with $V_{high} \geq +1.2V$, $V_{low} \leq +0.2V$

X DRIVE OUTPUT

Amplitude: 0 to +10 V dc linear ramp proportional to sweep frequency (sweep up only)

Linearity, 10% to 90%, best fit straight line: ±0.1% of final value. Specified for all linear sweep widths which are integral multiples of the minimum sweep width for each function and sweep time.

OPTION 001

HIGH STABILITY FREQUENCY REFERENCE

Ambient Stability: $\pm 5 \times 10^{-8}$ (0° to 55°C referenced to +30°C)

Aging Rate: $\pm 5 \times 10^{-8}$ per week (after 72 hours continuous operation)
$\pm 1 \times 10^{-7}$ per month (after 15 days continuous operation)

OPTION 002

HIGH VOLTAGE OUTPUT

Frequency Range:
Sine and Square Wave: 1 μHz to 1 MHz
Triangle and Ramps: 1 μHz to 10 kHz

Amplitude:

Range: 4mVp-p to 40Vp-p (≥ 500Ω, < 500pF load) maximum output current, ± 40mA

Accuracy (at 2 kHz): ±2% of full output for each range

Flatness: ±10% of programmed amplitude

DC Offset:
Range: 4 times the range of the standard instrument

Accuracy: ±(1% +25 mV) of full output for each range

Signal Characteristics:
Sine Wave Harmonic Distortion (relative to the fundamental frequency at full output into ≥500 ohms, <500 pF)

Fundamental Frequency	No Harmonic Greater Than
10 Hz to 50 kHz	−65 dB
50 kHz to 200 kHz	−60 dB
200 kHz to 1 MHz	−40 dB

Square Wave:

Rise/Fall Time: ≤ 125 nanoseconds, 10% to 90% at full output with ≥ 500 ohm, < 500pF load

Overshoot: <10% of peak amplitude with ≥500 ohm, <500 pF load

Table 1-2 Supplemental Information

MAIN SIGNAL OUTPUT

50 Ω Impedance

BNC Connector, switchable to front or rear panel (not switchable with Option 002)

May be floated a maximum of ±42 V peak (ac + dc) from chassis (earth) ground

Amplitude Ranges:
All AC Functions (with no dc offset):

Range No.	Attenuation Factor	Amplitude (Peak-to-Peak)
1	1	10.00 V to 3.000 V
2	3	2.999 V to 1.000 V
3	10	999.9 mV to 300.0 mV
4	30	299.9 mV to 100.0 mV
5	100	99.99 mV to 30.00 mV
6	300	29.99 mV to 10.00 mV
7	1000	9.999 mV to 3.000 mV
8	3000	2.999 mV to 1.000 mV

DC Offset Only:

Range No.	Attenuation Factor	Amplitude (Peak-to-Peak)
1	1	5.000 V to 1.500 V
2	3	1.499 V to 500.0 mV
3	10	499.9 mV to 150.0 mV
4	30	149.9 mV to 50.00 mV
5	100	49.99 mV to 15.00 mV
6	300	14.99 mV to 5.000 mV
7	1000	4.999 mV to 1.500 mV
8	3000	1.499 mV to 1.000 mV

Table 1-2. Supplemental Information (Cont'd).

AC Function with DC Offset:

Range No.	Attenuation Factor	AC Function Amplitude (p-p)	Maximum DC (+ or −)	Min. DC (+ or −)
1	1	9.998 V to 1.000 V	1.000 mV to 4.500 V	1.000 mV
2	3	999.9 mV to 333.4 mV	1.166 V to 1.499 V	0.100 mV
3	10	333.3 mV to 100.0 mV	333.3 mV to 450.0 mV	0.100 mV
4	30	99.99 mV to 33.34 mV	116.6 mV to 149.9 mV	0.010 mV
5	100	33.33 mV to 10.00 mV	33.33 mV to 45.00 mV	0.010 mV
6	300	9.999 mV to 3.334 mV	11.66 mV to 14.99 mV	0.001 mV
7	1000	3.333 mV to 1.000 mV	3.333 mV to 4.500 mV	0.001 mV

High Voltage Output Option 002:
Amplitude and Ranges: 4 times the standard instrument amplitudes

Output Impedance: $< 2\ \Omega$ at DC to $< 10\ \Omega$ at 1 MHz

Square Wave Settling Time: $< 1\ \mu s$ to settle to within .05% of final value for frequencies of 10 Hz to 500 kHz, tested at full output with no load

FREQUENCY SWEEP

Sweep Time:
Linear Sweep: 0.01 second to 99.99 seconds (single or continuous)

Log Sweep:
Single Sweep: 2 seconds to 99.99 seconds
Continuous Sweep: 0.1 second to 99.99 seconds

Maximum Sweep Width: 1 Hz to maximum frequency of the function selected

Minimum Sweep Width (Linear):

	Minimum Sweep Width	
Function	Sweep Time 0.01 second	Sweep Time 99.99 seconds
Sine	0.1 mHz	999.9 mHz
Square	0.05 mHz	499.5 mHz
Triangle	0.005 mHz	49.95 mHz
Ramps	0.01 mHz	99.99 mHz

Minimum Sweep Width (Log): 1 decade

Phase Continuity: Sweep is phase continuous over the full frequency range

WARMUP TIME

Standard Instrument: 20 minutes to within specified accuracy

Option 001 High Stability Frequency Reference:
Reference will be within $\pm 1 \times 10^{-7}$ of final value 15 minutes after turn-on at 25°C for an off time of less than 24 hours

AUXILIARY INPUTS (May be floated a maximum of ±42 V peak [ac + dc] from chassis [earth] ground)

Reference: For phase-locking the 3325A to an external frequency reference of 10 MHz or a subharmonic of 10 MHz down to 1 MHz. Level must be 0 dBm to +20 dBm into 50 ohms. Rear panel BNC connector.

Amplitude Modulation Input (Sine Function Only):

Modulation depth at full output for each range: 0 to 100%

Modulation frequency range: DC to 500 kHz (0 to 21 MHz carrier frequency)

Sensitivity: 5 V peak for 100% modulation

Input Impedance: 10 kΩ

Connector: Rear panel BNC

Phase Modulation:
Modulation Frequency Range: DC to 5 kHz

Modulation Depth

Function	Depth (+ or −)
Sine	850°
Square	425°
Triangle	42.5°
Ramps	85°

Input Impedance: 20 kΩ

Connector: Rear panel BNC

AUXILIARY OUTPUTS (May be floated a maximum of ±42 V peak [ac + dc] from chassis [earth] ground)

Auxiliary Frequency Output (ac coupled output):

Frequency Range: 21 MHz to 60.999 999 999 MHz, with underrange coverage to 19.000 000 001 MHz

Amplitude: 0 dBm

Output Impedance: 50 ohms

Connector: Rear panel BNC

1 MHz Reference Output (for phase-locking other instruments to 3325A):

Amplitude: 0 dBm

Output Impedance: 50 ohms

Connector: Rear panel BNC

Marker Output (Linear sweep only):

Levels: High to Low TTL compatible voltage transition at selected marker frequency, sweep up only.

Connector: Rear panel BNC

Table 1-2. Supplemental Information (Cont'd).

X Drive Output (Sweep up only):
Amplitude: 0 to + 10 V linear ramp proportional to sweep frequency

Connector: Rear panel BNC

Z Blank Output:
Levels (TTL compatible voltage levels):
Linear Sweep:
Single: Low at start of sweep, High at stop. Remains High until start of next sweep.

Continuous: Low during sweep up, High during sweep down.

Log Sweep:
Single: Low at start of sweep, High at stop. Remains High until start of next sweep.

Continuous: Low during sweep. Goes High momentarily at stop frequency.

10 MHz Oven Reference Output, Option 001, for phase locking the 3325A to the optional high stability frequency reference:

Amplitude: 0 dBm, 50 ohms

Connector: Rear panel BNC. Must be connected to the rear panel EXT REF IN connector.

REMOTE CONTROL

Hewlett-Packard Interface Bus (HP-IB) Control: (HP-IB is Hewlett-Packard Company's implementation of IEEE Standard 488-1978). Time shown is in addition to programming time.

Frequency Switching and Settling Time:*

< 10 ms to within 1 Hz of final value for 100 kHz span

< 25 ms to within 1 Hz of final value for 1 MHz span

< 70 ms to within 1 Hz of final value for 20 MHz span

Phase Switching and Settling Time:*
< 15 ms to within 90° of phase lock for 20 MHz frequency change

Amplitude Switching Time:*
< 30 ms to within amplitude specifications

*Times shown are in addition to programming time

GENERAL

Operating Environment:

Temperature: 0° to 55°C
Relative Humidity: <95%, 0° to 40°C
Altitude: ≤ 15,000 ft.

Storage Temperature: −50° to +75°C
Storage Altitude: ≤50,000 ft.

Power Requirements:

100/120/220/240V+5%,−10%,48 to 66 Hz
60 VA, 100 VA with all options, 10 VA standby

Dimensions in millimeters and (inches):

132.6 (5¼) high × 425.5 (16¾) wide × 497.8 (19-5/8) deep

Weight in kilograms and (lbs):

Net weight: 9(20)
Shipping Weight: 14.5 (32)

The following accessory options are also available for the Model 3325A:

Option 907	Front Handle Assembly
Option 908	Rack Mount Flange Kit
Option 909	Rack Mount Flange Kit/Front Handle Assembly
Option 910	Additional Operating and Service Manual

1-17. ACCESSORIES SUPPLIED.

1-18. A special connector is supplied with the High Stability Frequency Reference Option 001 for connecting the rear panel Reference Output to the Reference Input. This connector is Part No. 1250-1499.

1-19. ACCESSORIES AVAILABLE.

1-20. The following accessories are available for use with the Model 3325A:

Number	Description
11048C	50 ohm Feedthru Termination
11356A	Ground Isolator
03325-80001	Oven Board Assy. (Converts 3325A to Option 001)
03325-80002	High Voltage Option (Converts 3325A to Option 002)
5061-0077	Rack Mount Flange Kit (Option 908)
5061-0083	Rack Mount Flange/Front Handle Kit (Option 909)
5061-0089	Front Handle Kit (Option 907)

1-21. INSTRUMENT AND MANUAL IDENTIFICATION.

1-22. The instrument serial number is located on the rear panel. Hewlett-Packard uses a two-section serial number consisting of a four-digit prefix and a five-digit suffix. A letter between the prefix and suffix identifies the country in which the instrument was manufactured (A = USA, G = West Germany, J = Japan, U = United Kingdom). All correspondence with Hewlett-Packard concerning this instrument should include the complete serial number.

1-23. The serial number prefix is the same for all identical instruments and changes only when a change is made to the instrument. The suffix is assigned sequentially and is different for each instrument. If the serial number of your instrument is lower than the serial number on the title page of this manual, refer to Section VII, MANUAL CHANGES, for the information that will adapt this manual to your instrument. This is especially important if the serial prefix of your instrument is different than the one shown on the title page of this manual. An instrument manufactured after the printing of this manual may differ in some respect from the information in this manual. In this case, a yellow Manual Changes supplement included with the manual explains how to adapt the manual to your instrument.

1-24. SAFETY CONSIDERATIONS.

1-25. To ensure safe operation and to retain the instrument in a safe condition, this Operating and Service Manual contains information, cautions and warnings which must be adhered to by the user or service personnel.

Table 1-3. HP-IB Interface Capability.

Code	Function
SH1	Source handshake capability
AH1	Acceptor handshake capability
T6	Basic talker; Serial poll; Unaddressed to talk if addressed to listen
L3	Basic listener; Listen only; Unaddressed to listen if addressed to talk
SR1	Service Request capability
RL1	Remote/Local capability
PP0	No parallel poll capability
DC1	Device Clear capability
DT0	No device trigger capability
C0	No controller capability
E1	Open collector bus drivers

1-26. The symbol ⚠ appearing on the front or rear panel of the 3325A is an international symbol meaning "refer to the Operating and Service Manual". The symbol identifies important instructions required to prevent damage to the instrument. To ensure the safety of the operating and maintenance personnel and retain the safe operating condition of the instrument, these instructions must be adhered to.

1-27. RECOMMENDED TEST EQUIPMENT.

1-28. Equipment required to maintain the Model 3325A is listed in Table 1-5. Other equipment can be substituted if it meets or exceeds the critical specifications listed in the table.

Table 1-4. HP-IB Response Times.

Function	Mnemonic	Input Data Transfer Time	Device Time	Output Data Transfer Time
Function (Waveform) 1 Digit	FU	450-500 μs 225-250 μs	1600 ms 2.8 ms	450-500 μs 225-250 μs
Frequency ≤11 Digits + Decimal Delimiters	FR HZ, KH, or MH	450-500 μs 225-250 μs each 450-500 μs	7.0 ms 2.8 ms each 12.5 ms	450-500 μs 225-250 μs each 450-500 μs
Amplitude ≤4 Digits + Decimal Delimiters	AM VO or MV VR or MR DB	450-500 μs 225-250 μs each 450-500 μs 450-500 μs 450-500 μs	6.8 ms 2.8 ms each 90 ms 130 ms 250 ms	450-500 μs 225-250 μs each 450-500 μs 450-500 μs 450-500 μs
DC Offset ≤4 Digits + Decimal Delimiters	OF VO or MV	450-500 μs 225-250 μs each 450-500 μs	6.8 ms 2.8 ms each 82 ms	450-500 μs 225-250 μs each 450-500 μs
Phase ≤4 Digits + Decimal Delimiter	PH DE	450-500 μs 225-250 μs each 450-500 μs	5 ms 2.8 ms each 28 ms	450-500 μs 225-250 μs each 450-500 μs
Sweep Start Frequency ≤11 Digits + Decimal Delimiters	ST HZ, KH, or MH	450-500 μs 225-250 μs each 450-500 μs	7.0 ms 2.8 ms each 10.3 ms	450-500 μs 225-250 μs each 450-500 μs
Sweep Stop Frequency ≤11 Digits + Decimal Delimiters	SP HZ, KH or MH	450-500 μs 225-250 μs each 450-500 μs	7.0 ms 2.8 ms each 10.3 ms	450-500 μs 225-250 μs each 450-500 μs
Sweep Marker Frequency ≤11 Digits + Decimal Delimiters	MF HZ, KH or MH	450-500 μs 225-250 μs each 450-500 μs	7.0 ms 2.8 ms each 10.3 ms	450-500 μs 225-250 μs each 450-500 μs
Sweep Time ≤4 Digits + Decimal Delimiter	T1 SE	450-500 μs 225-250 μs each 450-500 μs	5.5 ms 2.8 ms each 7.0 ms	450-500 μs 225-250 μs each 450-500 μs
Store	SR	450-500 μs	11 ms	
Recall	RE	450-500 μs	1700 ms	
Assign Zero Phase	AP	450-500 μs	5.2 ms	
Amptd Cal	AC	450-500 μs	1500 ms	
Start Single Sweep	SS	450-500 μs	300 ms	
Start Continuous Sweep	SC	450-500 μs	300 ms	
Interrogate (Add Parameter Mnemonic Time)	I	225-250 μs	3 ms	
Mask Service Request	MS	450-500 μs	4.5 ms	
High Voltage Output	HV	450-500 μs	48 ms	
Rear/Front Output	RF	450-500 μs	44.5 ms	
Self Test	TE	450-500 μs	10,000 ms	
Sweep Mode	SM	450-500 μs	4.5 ms	
Data Transfer Mode	MD	450-500 μs	4.5 ms	
Interrogate Function	IFU	675-750 μs	1603 ms	
Interrogate Error	IER	675-750 μs	11.5 ms	
Universal Commands		~225 μs per byte		
Amplitude Modulation	MA	450-500 μs	7.0 ms	
Phase Modulation	MP	450-500 μs	7.0 ms	

Table 1-5. Recommended Test Equipment.

Instrument	Critical Specifications	Required For				Recommended Model
		Oper. Ver.	Perf. Tests	Adjust-ments	Trouble-shooting	
Oscilloscope	Vertical Bandwidth: dc to 100 MHz Deflection: 0.01 V to 10V/div Horizontal Sweep: 0.05 μs to 1 s/div x10 Magnification Delayed Sweep	X	X	X	X	-hp- 1740A
Electronic Counter	Frequency Measurement Frequency Range: to 20 MHz Resolution: 8 digits Accuracy: ±2 counts Time Interval Average A to B Resolution: 0.1 ns	X	X	X		-hp- 5328A with Opt 01 and 040 or 041
Digital Voltmeter	DC Function Ranges: .1 V, 1 V, 10 V, 100 V Accuracy: ±.2% Resolution: 4½ digits AC Function Ranges: 1 V, 10 V, 100 V Accuracy: ±.5% Resolution: 4 digits			X	X	-hp- 3466A
	DC Function Ranges: .1 V, 1 V, 10 V, 100 V Accuracy: ±.05% Resolution: 6 digits AC Function: True RMS Ranges: 1 V, 10 V, 100 V Accuracy: ±.2% Resolution: 6 digits Crest Factor: 4:1	X	X	X		-hp- 3455A
50-ohm Load	Accuracy: ±.2% Power Rating: 1 W	X	X	X	X	-hp- 11048C
High Frequency Spectrum Analyzer	Frequency Range: 1 kHz to 100 MHz Amplitude Accuracy: ±.5 dB	X	X	X		-hp- 141T/8552B/8553B/8566A/8568A
Low Frequency Spectrum Analyzer	Frequency Range: 20Hz-50kHz Amplitude Accuracy: ±.5 dB Spurious Responses: 80 dB below reference	X	X	X		-hp- 3580A/3585A
Sine Wave Signal Source	Frequency: 1 kHz Amplitude: 1 V rams into 20 kΩ			X		-hp- 204C
	Frequency Range:		X			-hp- 3335A 1 MHz-20 MHz Amplitude Range: to +7.0 dBm Output Impedance: 50 Ω Phase Noise (Integrated): 9.9 MHz: < −63 dB 20 MHz: < −70 dB Spurious: > 75 dB below fundamental
Double Balanced Mixer	Impedance: 50Ω Frequency: to 20 MHz		X			-hp- 10534A or 10514A
1 MHz Low Pass Filter	Cut-off Frequency: 1 MHz Stopband Atten: 50 dB by 4 MHz Stopband Freq: 4 MHz-80 MHz		X			F882 1MHz Low Pass Filter, Impedance 50Ω, C Shape Factor, Metal Can, BNC's Allen Avionics, Inc. 224 E. Second St. Mineola, NY 11501
15 kHz Noise Equivalent Filter	Consisting of: Resistor: 10 kΩ ±1% Capacitor: 1600 pF ±5%		X			-hp- 0757-0340 -hp- 0160-2223

Table 1-5. Recommended Test Equipment (Cont'd).

Instrument	Critical Specifications	Required For				Recommended Model
		Oper. Ver.	Perf. Tests	Adjust-ments	Trouble-shooting	
AC Voltmeter	Ranges: 0.1 V to 1 V Frequency Range:20 Hz-1 MHz Input Impedance: ≥ 1 MΩ Meter: Log scale Acc (100 Hz to 10 kHz): ± 1%		X			-hp- 400 FL
Resistor	1 kΩ ± 5%			X		-hp- 0683-1025
Oscilloscope Probe	Division Ratio: 10 to 1 Impedance: 1 MΩ, 12 pF			X	X	-hp- 10041A
DC Power Supply	Volts: 0-10 V Amps: 10 mA Floating output		X	X		-hp- 6214A
Frequency Standard (Required for Option 001 Only)	Frequency: 5 MHz Accuracy: 1×10^{-9}			X		-hp- 105B
Calculator (Required for automatic testing)	HP-IB Control Capability	X	X			-hp- 9825A with 98034A Interface, General I/O ROM, Extended I/O ROM
System Voltmeter	DC Voltage: 0 to ± 10 V Sample/Hold Measurement External Trigger: Low True TTL Edge Trigger Trigger Delay: selectable, 10 μs to 140 μs		X			-hp- 3437A
BNC Tee Adapter BNC-to-Triax Adapter	Male-female-female BNC-to-dual banana plug Female BNC-to-Male Triax	X X	X X X	X X		-hp- 1250-0781 -hp- 1250-2277 -hp- 1250-0595
Signature Analyzer	Signature: 4-digit hexadecimal Characters:0thru 9,A,C,F,H,P,U Threshold Logic 1: +2.2 V Logic 0: +0.5 V Clock Frequency: ≥ 1.5 MHz				X	-hp- 5004A
Pulse Generator	Pulse Rate: 500 kHz Pulse Width: ≤ 1 μs DC Offset: 1 V				X	-hp- 3312A
Resistor	56.2Ω 1% 1/8W	X	X			-hp- 0757-0395
Thermal Converter	Input Impedance: 75 Ω Input Voltage: 0.5 V rms Frequency: 2 kHz to 20 MHz Frequency Response: ± 0.05 dB 2 kHz to 20 MHz		X	X		-hp- 11050A
Resistive Divider	Consisting of: Resistor: 36.5 Ω 1% ½ W Resistor: 13.7 Ω 1% ½ W		X			-hp- 0757-0996 -hp- 0698-4998
Resistive Divider	Consisting of: Resistor: 40.2 Ω 1% ½ W Resistor: 10 Ω 1% ½ W		X			-hp- 0698-5022 -hp- 0757-0984
Resistive Divider	Consisting of: Resistor: 30 Ω 1% ¼ W Resistor: 20 Ω 1% ¼ W		X			-hp- 0698-7533 -hp- 0698-6296
Resistive Divider	Consisting of: Resistor: 100 kΩ 1% 1/8 W Resistor: 162 kΩ 1% 1/8 W		X			-hp- 0757-0465 -hp- 0757-0470
Termination	50 ohm Feedthrough 1%		X			-hp- 11048C
Thermal Converter	BNC Connectors		X			-hp- 11050A

SECTION II
INSTALLATION

2-1. INTRODUCTION.

2-2. This section contains instructions for installing and interfacing the Model 3325A Synthesizer/Function Generator. Included are initial inspection procedures, power and grounding requirements, line voltage selection, environmental requirements, installation instructions, HP—IB connection procedure, and instructions for repackaging for shipment.

2-3. INITIAL INSPECTION.

2-4. Inspect the shipping container for damage. If the shipping container or cushioning material is damaged, it should be kept until the contents of the shipment have been checked for completeness and the instrument has been checked mechanically and electrically. This instrument was carefully inspected both mechanically and electrically before shipment. It should be free of mars and scratches and in perfect electrical order upon receipt. Procedures for checking electrical performance are given in Section IV. If there is mechanical damage or defect or if the instrument does not pass the electrical performance test, notify the nearest Hewlett-Packard Sales and Service Office listed at the rear of this manual. If the shipping container is damaged or the cushioning material shows signs of stress, notify the carrier as well as the Hewlett-Packard office. Keep the shipping material for the carrier's inspection. The warranty statement is located in the front of this manual.

2-5. PREPARATION FOR USE.

2-6. Power Requirements.

2-7. The Model 3325A requires a power source of 100, 120, 220, or 240 V ac, +5%, -10%, 48 to 66 Hz single phase. Power consumption is 100 VA maximum.

2-8. Line Voltage Selection.

CAUTION

Before connecting ac power to this instrument, make sure it is set to the line voltage of the power source. Also ensure that the common connection of the power outlet is connected to a protective earth contact.

WARNING

The line voltage selection switches are located inside the top cover of the instrument. Line voltage selection should be done by trained service personnel only. To avoid electrical shock, make sure the power cord is disconnected before removing the instrument cover.

2-9. The line voltage selection switches are set at the factory to correspond to the line voltage option ordered. This information may be found on the rear panel.

Option	Line Voltage Selected
100	100 V
120	120 V
220	220 V
240	240 V

If it is necessary to change the line voltage selection, access to the switches may be gained by removing the top cover of the 3325A. Make the desired voltage selection as shown in Figure 2-1. Be sure to observe the CAUTION in Figure 2-1.

2-10. Power Cable.

2-11. In accordance with international safety standards, this instrument is equipped with a three-wire cable. When connected to an appropriate power line outlet, this cable grounds the instrument cabinet. The type of power cable shipped with each instrument depends on the country of destination. Refer to Figure 2-2 for the connector configuration and -hp- part numbers of the available power cables.

2-12. HP—IB Connections.

2-13. Interconnection data concerning the rear panel HP—IB connector is provided in Figure 2-3. This connector is compatible with the -hp- 10631 (A, B, or C) HP—IB cables. The lengths of these cables are as follows:

10631A	1 meter
10631B	2 meters
10631C	4 meters

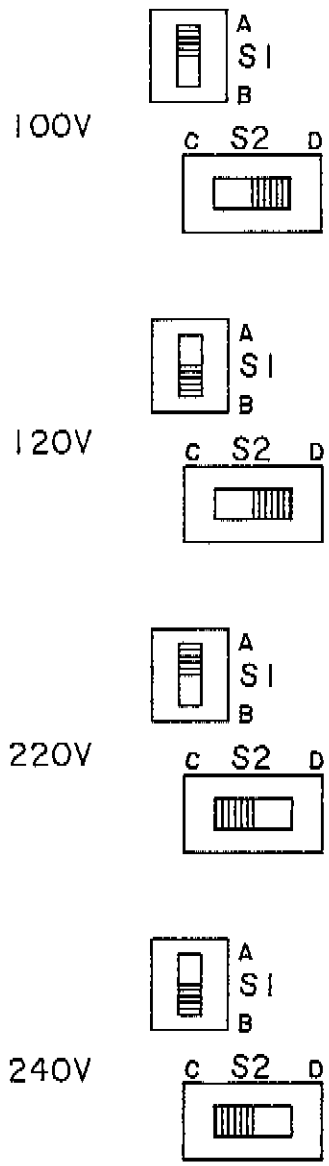

LINE VOLTAGE	S1	S2
100V	A	D
120V	B	D
220V	A	C
240V	B	C

CAUTION

WHEN CHANGING THE LINE VOLTAGE SELECTION, MAKE SURE THE CORRECT FUSE IS INSTALLED FOR FOR THE VOLTAGE SELECTED.

LINE VOLTAGE	FUSE	-hp-PART NO.
100/120V	1A	2110-0001
220/240V	.5A	2110-0012

AFTER CHANGING LINE VOLTAGE SELECTION, BE SURE TO INDICATE ON THE REAR PANEL THE NEW VOLTAGE SELECTED.

3325A-29

Figure 2-1. Line Voltage Selection.

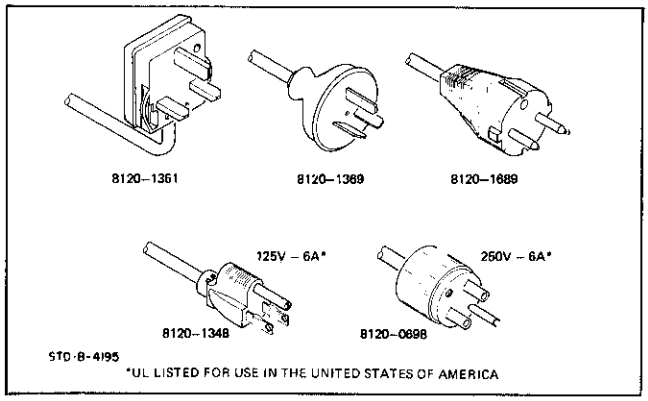

Figure 2-2. Power Cables.

Up to 15 instruments (including the controller) may be connected in an HP—IB system. The HP—IB cables have identical stacking connectors on both ends so that several cables can be connected to a single source. As a practical matter, avoid stacking more than three or four cables on any one connector. If the stack gets too large, the force on the stack can produce enough leverage to damage the connector mounting. Be sure that the connector screws are tightened firmly in place to keep it from working loose during use, and be sure to observe the CAUTION of Figure 2-3.

2-14. Cable Length Restrictions. System components can be interconnected in virtually any configuration. However, to achieve reliable system performance, proper voltage levels and timing relationships must be maintained. If the system cable is too long, the lines cannot be driven properly and the system will fail to perform. The maximum length of cable that can be used to connect a group of instruments must not exceed 2 meters (6.5 ft.) times the number of instruments to be connected, or 20 meters (65.6 ft.), whichever is less.

2-15. 3325A Listen/Talk Address.

2-16. The 3325A is normally shipped from the factory with the listen address set to ASCII character 1; talk address Q. The 3325A address switches are located inside the top cover near the center of the instrument. The possible HP—IB addresses are shown in Table 2-1. Set the five switches (marked 1 through 5) to the correct positions corresponding to the ASCII code address chosen. The 3325A may be set to a "listen only" condition by setting the switch marked LON to the "1" position. Be sure to leave the ROM switch in the "1" position. This switch is used for troubleshooting only.

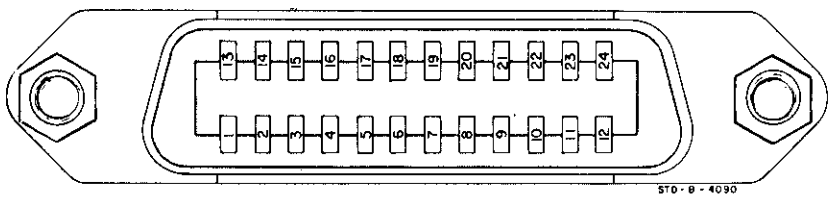

PIN	LINE
1	DI01
2	DI02
3	DI03
4	DI04
13	DI05
14	DI06
15	DI07
16	DI08
5	EOI
17	REN
6	DAV
7	NRFD
8	NDAC
9	IFC
10	SRQ
11	ATN
12	SHIELD—CHASSIS GROUND
18	P/O TWISTED PAIR WITH PIN 6
19	P/O TWISTED PAIR WITH PIN 7
20	P/O TWISTED PAIR WITH PIN 8
21	P/O TWISTED PAIR WITH PIN 9
22	P/O TWISTED PAIR WITH PIN 10
23	P/O TWISTED PAIR WITH PIN 11
24	ISOLATED DIGITAL GROUND

THESE PINS ARE INTERNALLY GROUNDED

CAUTION

The 3325A contains metric threaded HP—IB cable mounting studs as opposed to English threads. Metric threaded -hp-10631A, B, or C HP—IB cable lockscrews must be used to secure the cable to the instrument. Identification of the two types of mounting studs and lockscrews is made by their color. English threaded fasteners are colored silver and metric threaded fasteners are colored black. DO NOT mate silver and black fasteners to each other or the threads of either or both will be destroyed. Metric threaded HP-IB cable hardware illustrations and part numbers follow.

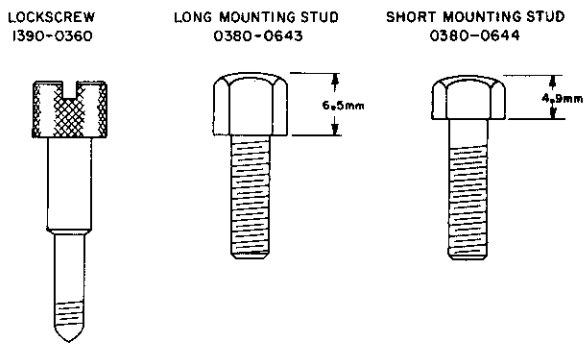

Figure 2-3. HP—IB Connector.

WARNING

Because the address switches are located inside the instrument, they should be set by trained service personnel only. To avoid electrical shock, make sure the power cord is disconnected before removing the instrument cover.

2-17. HP—IB Description.

2-18. A description of the HP-IB is provided in Section III of this manual. A study of this information is necessary if you are not familiar with the HP-IB Concept. Additional information concerning the design criteria and operation of the bus is available in IEEE Standard 488-1978 "IEEE Standard Digital Interface for Programmable Instrumentation."

2-19. Connecting Oven Option 001.

2-20. In order to use the Oven Option 001, an external connection must be made between the rear panel 10 MHz OVEN OUTPUT and the REF IN connectors. A special connector for this purpose, -hp- Part No. 1250-1499, is supplied with instruments having Option 001.

2-21. OPERATING ENVIRONMENT.

WARNING

To prevent potential electrical or fire hazard, do not expose equipment to rain or moisture.

2-22. In order for the 3325A to meet the specifications listed in Table 1-1, the operating environment must be within the following limits:

Temperature	0 to +55° C
Relative Humidity	95% at 40° C
Altitude	4600 meters (15,000 feet)

2-23. Cooling System.

2-24. The cooling fan intake and the exhaust vent are located in the rear panel. When operating the instrument, provide at least 75 mm (3 inches) of clearance at the rear, and at least 7 mm (¼ inch) on all sides of the instrument. Failure to allow adequate air circulation will result in excessive internal temperature, reducing instrument reliability.

2-25. It is imperative that the fan filter be inspected frequently and cleaned or replaced as necessary to permit the free flow of air through the instrument. To clean the filter, remove the four nuts that secure the filter retainer. Remove the filter and flush with soapy water, rinse clean, and air dry.

2-26. Bench Operation.

2-27. The instrument has plastic feet attached to the bottom panel. The front feet contain foldaway tilt stands for convenience in bench operation. The tilt stand raises the front of the instrument for easier viewing of the control panel. The plastic feet are shaped to make full-width modular instruments self-align when they are stacked. A front handle kit, -hp- Part No. 5061-0089 (Option 907), can be installed for ease of handling the instrument on the bench (see Figure 2-4). The kit is shipped with the instrument if Option 907 is also ordered. Otherwise, the front handle kit is available separately by its -hp- part number.

2-28. Rack Mounting.

2-29. The 3325A can be rack mounted in a rack having an EIA standard width of 482.6 mm (19 inches). The instrument can be rack mounted with or without a handle kit by use of the following items:

a. Rack mounting without handles; use Rack Mount Flange Kit -hp- Part No. 5061-0077 (Option 908).

b. Rack mounting with handles; use the combination Rack Mount Flange/Front Handle Kit -hp- Part No. 5061-0083 (Option 909).

NOTE

The Rack Mount Flange Kit of item a will not provide the space requirement for rack mounting when used with the bench handle assembly (-hp- Part No. 5060-9899, Option 907). To rack mount with handles, the combination kit of item b (Option 909) must be used (see Figure 2-4). If either Option 908 or 909 is ordered, the corresponding kit is shipped with the instrument. Otherwise, both kits are available separately by their -hp- part numbers.

2-30. STORAGE AND SHIPMENT.

2-31. Environment.

2-32. The instrument should be stored in a clean, dry environment. The following environmental limitations apply to both storage and shipment:

Temperature	-40° C to +75° C
Relative Humidity	95% at 40° C
Altitude	15,300 meters (50,000 feet)

Table 2-1. HP—IB Addresses.

	ASCII Characters		Address Switches (Binary Code)					Equivalent Codes (To 5-Bit Binary Switches)		
	Listen Address	Talk Address	5	4	3	2	1	Octal	Decimal	Hexadecimal
	SP	@	0	0	0	0	0	00	00	00
	!	A	0	0	0	0	1	01	01	01
	"	B	0	0	0	1	0	02	02	02
	#	C	0	0	0	1	1	03	03	03
	$	D	0	0	1	0	0	04	04	04
	%	E	0	0	1	0	1	05	05	05
	&	F	0	0	1	1	0	06	06	06
	'	G	0	0	1	1	1	07	07	07
	(	H	0	1	0	0	0	10	08	08
	)	I	0	1	0	0	1	11	09	09
	*	J	0	1	0	1	0	12	10	0A
	+	K	0	1	0	1	1	13	11	0B
	,	L	0	1	1	0	0	14	12	0C
	-	M	0	1	1	0	1	15	13	0D
	.	N	0	1	1	1	0	16	14	0E
	/	O	0	1	1	1	1	17	15	0F
Factory Selected Address →	Ø	P	1	0	0	0	0	20	16	10
	1	Q	1	0	0	0	1	21	17	11
	2	R	1	0	0	1	0	22	18	12
	3	S	1	0	0	1	1	23	19	13
	4	T	1	0	1	0	0	24	20	14
	5	U	1	0	1	0	1	25	21	15
	6	V	1	0	1	1	0	26	22	16
	7	W	1	0	1	1	1	27	23	17
	8	X	1	1	0	0	0	30	24	18
	9	Y	1	1	0	0	1	31	25	19
	:	Z	1	1	0	1	0	32	26	1A
	;	[	1	1	0	1	1	33	27	1B
	<	\	1	1	1	0	0	34	28	1C
	=	]	1	1	1	0	1	35	29	1D
	>	~	1	1	1	1	0	36	30	1E

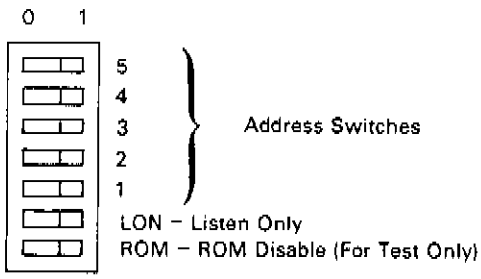

NOTE: The Equivalent Codes shown correspond only to the 5-bit binary switch code. These bits are the same for both listen and talk addresses, and the sixth and seventh bits determine whether the address is listen (01) or talk (10). Some controllers distinguish between listen and talk automatically, requiring only the 5-bit code equivalent to designate a device.

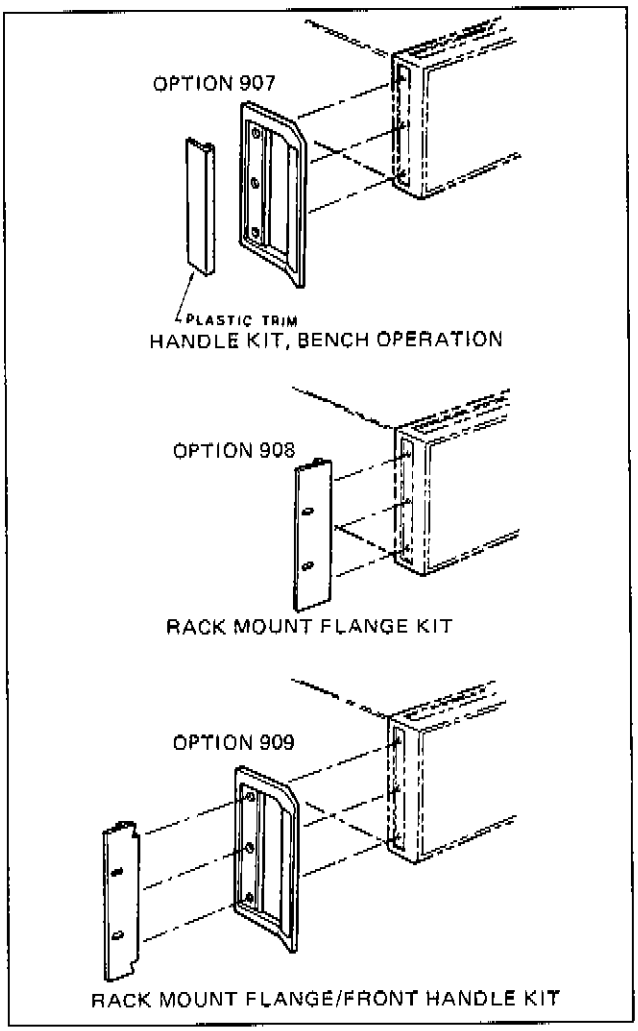

Figure 2-4. Rack Mount and Handle Kits.

2-33. Instrument Identification.

2-34. If the instrument is being returned to Hewlett-Packard for servicing, attach a tag indicating the type of service required, return address, model number, and full serial number. In any correspondence, refer to the instrument by model number and full serial number.

2-35. Packaging.

2-36. Original Packaging. If the original packaging has been retained, pack the instrument in the same manner as it was received. Be sure to seal the shipping container securely. Also, mark the container FRAGILE to assure careful handling.

2-37. Other Packaging. The following general instructions should be used for repackaging with commercially available materials.

a. Wrap the instrument in heavy paper or plastic. (If shipping to a Hewelett-Packard office or service center, attach a tag indicating the type of service required, return address, model number, and full serial number.)

b. Use a strong shipping container. A doublewall carton made of 250-pound test material is adequate.

c. Use enough shock-absorbing material (3-to-4 inch layer) around all sides of the instrument to provide firm cushion and prevent movement inside the container. Protect the control panel with cardboard.

d. Seal the shipping container securely.

e. Mark the shipping container FRAGILE to assure careful handling.

SECTION III
OPERATION

3-1. INTRODUCTION.

3-2. This section of the manual contains instructions for manual operation and HP-IB (Hewlett-Packard Interface Bus) programming. The HP-IB information includes the basic concepts of the interface bus operation, with which you may already be familiar. Use Table 3-1 to locate the information you need for your particular situation.

Table 3-1. Operating Information.

Paragraph	Content
3-3	PANEL FEATURES (Figure 1-1)
3-5	POWER/WARMUP
3-8	INITIAL CONDITIONS
3-10	SELF TEST
3-12	FRONT/REAR SIGNAL OUTPUT
3-14	SYNC OUTPUT
3-16	EXTERNAL REFERENCE INPUT
3-18	10 MHz OVEN OPTION 001
3-20	MANUAL PROGRAMMING
3-22	Clear Display
3-24	Entry Errors
3-26	Function Selection
3-28	Frequency Entry
3-30	Frequency Limits
3-32	Frequency Display and Resolution
3-34	Auxiliary Output (Sine Function Only)
3-36	Amplitude Entry
	Table 3-2, Amplitude Limits of AC Functions
3-39	Amplitude Calibration
3-41	High Voltage Output Option 002
	Table 3-3, High Voltage Output Amplitudes
3-43	DC Offset
	Table 3-4 and Figure 3-2, Maximum DC Offset
3-46	Phase Entry
3-49	Frequency Sweep
3-55	Sweep Marker
3-58	Sweep X Drive Output
3-60	Sweep Z Blank Output
3-62	Amplitude Modulation
3-66	Phase Modulation
3-68	Modify Keys
3-70	Store and Recall
3-72	OPERATOR'S CHECKS
3-74	Self Test
3-76	Output Checks
3-78	OPERATOR'S MAINTENANCE
3-81	HP-IB OPERATION
3-83	General HP-IB Description
	Figure 3-3, Interface Connections and Bus Structure
	Table 3-5, General Interface Management Lines
3-88	Definition of HP-IB Terms and Concepts
3-89	Basic Device Communication Capability
3-91	Message Definitions
	Table 3-6, Definition of Meta Messages
3-93	3325A Response to Messages
	Table 3-7, Implementation of Messages
3-95	HP-IB Work Sheet
3-97	HP-IB Addressing

Paragraph	Content
3-100	3325A REMOTE PROGRAMMING
3-101	3325A HP-IB Capabilities
	Table 3-8, Interface Functions
3-103	Developing an HP-IB Program
3-107	Universal and Addressed Commands
3-109	Placing the 3325A in Remote
3-111	The 3325A Address
	Table 3-9, Summary of 3325A Programming, ASCII Characters
	Table 3-10, Programming Codes
3-113	3325A Data Message Formats
3-115	Data Transfer Mode
3-118	Programming Data Transfer Mode
3-120	Programming Entry Parameters
	Frequency
	Amplitude
	Offset
	Phase
	Sweep Start Frequency
	Sweep Stop Frequency
	Sweep Marker Frequency
	Sweep Time
3-122	Programming Waveform Function
3-124	Programming Binary (ON or OFF) Function
	High Voltage Output (Option 002)
	Amplitude Modulation
	Phase Modulation
3-126	Programming Selection Functions
	Rear Output/Front Output
	Linear Sweep/Logarithmic Sweep
	Data Transfer Mode
3-128	Programming Execution Functions
	Assign Zero Phase Reference
	Perform Amplitude Calibration
	Start Single Sweep
	Start Continuous Sweep
	Perform Self Test
3-130	Programming Amplitude Units Conversion
3-132	Programming Storage Registers
3-134	Service Requests
3-136	Serial Poll
3-138	Status Byte
3-140	Busy Flag
3-142	Sweep Flag
3-144	Masking or Enabling Service Requests
	Table 3-11, SRQ Mask/Enable Data
3-146	Interrogating Program Errors
3-148	Interrogating Entry Parameters
3-150	Interrogating Function (Waveform)
3-152	Interrogating Miscellaneous Parameters
3-154	Using the Interrogate Capability
3-156	3325A Programming Procedure

Appendices

A-3 META MESSAGES BLOCK DIAGRAMMED

B-3 PROGRAMMING THE MODEL 3325A with the 9825A CALCULATOR

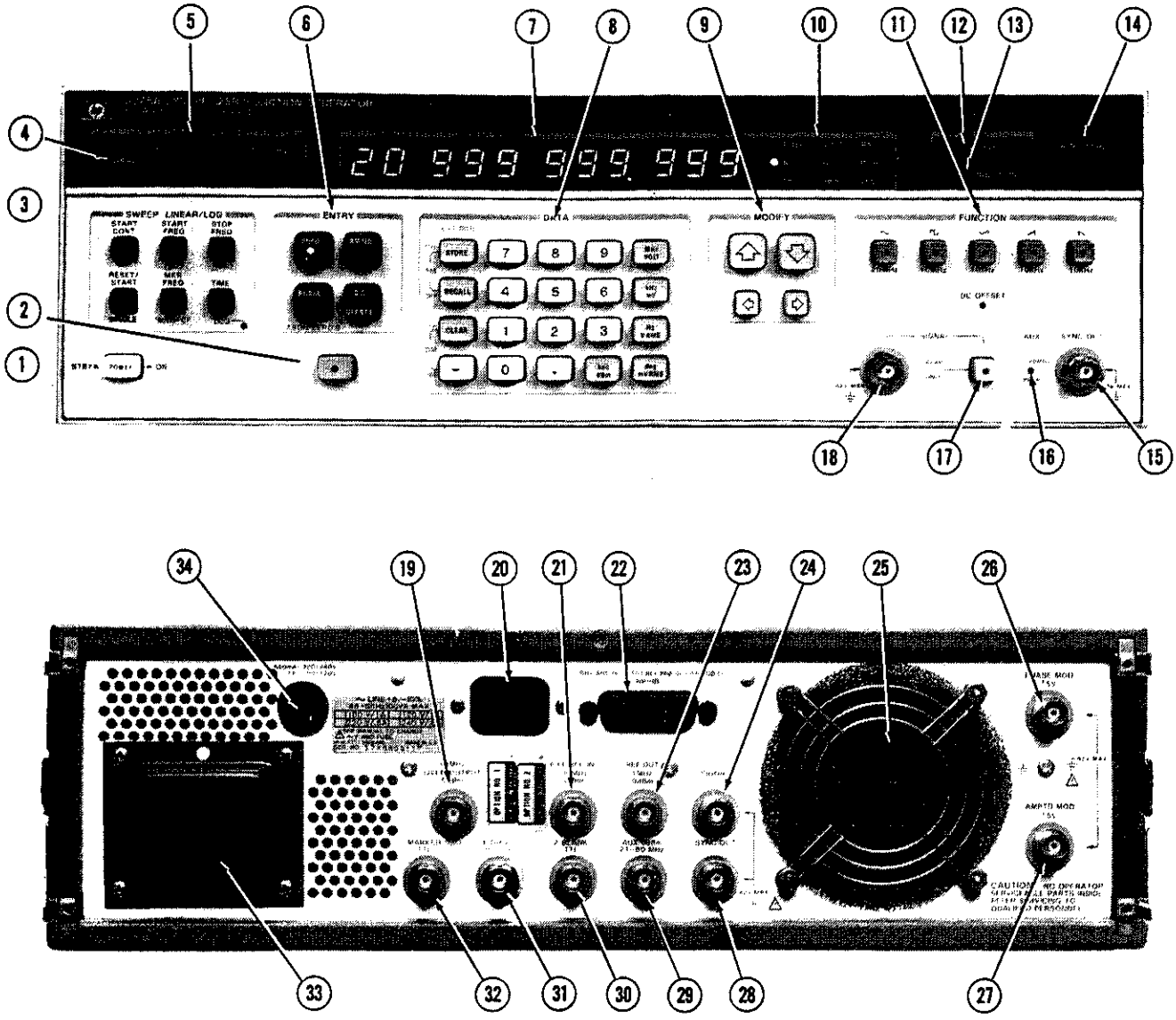

(1) POWER STBY/ON Key. In the STBY position, power is applied to the Oven (Option 001), the HP-IB interface circuits that are external to the isolation barrier, and the High Voltage Output circuits (Option 002), in addition to the power supply circuits.

(2) BLUE prefix key. This key must be pressed to select any of the key functions labeled in blue.

(3) SWEEP key group. These are entry prefix keys for the sweep parameters, plus the sweep start keys. When preceded by the blue prefix key, the sweep parameter keys control sweep modification functions and linear/log selection.

(4) LOCAL key. Returns 3325A from remote to front panel control unless Local Lockout has been programmed. When preceded by the blue prefix key, this key causes the 3325A HP-IB address to be displayed in decimal code.

(5) STATUS annunciator group. These annunciators indicate the 3325A HP-IB status: Remote; Addressed to Talk; Addressed to Listen; Request Service (SRQ).

(6) ENTRY group. Prefix keys for programming signal parameters.

(7) ALPHANUMERIC display. Displays the value of the parameter selected, error codes, failure modes, HP-IB address, amplitude and phase modulation state.

Figure 3-1. 3325A Front and Rear Panels.

(8) DATA group. This group includes the numeric data keys, the data value suffix keys, the Store and Recall command keys, and the entry Clear key. When preceded by the blue prefix key, the keys in the left column control the modulation functions.

(9) MODIFY group. The horizontal arrow keys select the digit to be modified (indicated by a bright digit), and the vertical arrow keys increment or decrement that digit.

(10) UNITS annunciators. Display the units of volume represented by the numeric display. Entry annunciator indicates that an entry is in progress.

(11) FUNCTION group. These keys select the output signal function or dc only (see Paragraph 3-26).

(12) EXT REF annunciator is on if an external reference or the Option 001 internal 10 MHz oven reference is connected to the rear panel REF IN. Annunciator flashes if the 30 MHz internal reference is not phase locked to the external reference.

(13) MODULATION annunciator is on if either AM or Phase modulation is programmed.

(14) AMPTD CAL key. Automatically calibrates the amplitude and offset of the output signal (see Paragraph 3-39). When preceded by the blue prefix key, initiates a self test operation (see Paragraph 3-10).

CAUTION

The maximum peak voltage that can be safely applied between chassis and the outer conductor of any of the 3325A input or output signal connectors is ±42 V.

(15) SYNC OUT. A square wave sync signal is available at this connector and also at a rear panel connector, item 28. This signal is always in sync with the output signal crossover point. (Zero volts or dc offset voltage, see Paragraph 3-14.) J2.

(16) AUX 21-60 MHz REAR annunciator. This annunciator is on when the rear panel AUX output is active (see Paragraph 3-34).

(17) REAR ONLY key. In standard instruments, switches signal output from front to rear panel and vice versa. Rear panel output is active when the annunciator in the center of the key is on. In instruments with High Voltage Output Option 002, this key switches from normal to high voltage output, and the annunciator indicates when the high voltage output is on. The key is labeled "40 Vpp, 40 mA, 0-1 MHz" for Option 002. In Option 002 instruments, no rear panel signal output is provided.

(18) SIGNAL output. Standard output impedance is 50 ohms. High Voltage Output Option 002 output impedance is nominally <1 ohm at dc and <10 ohms at 1 MHz. Load impedance must be at least 500 ohms. Standard and High Voltage amplifier outputs are fused. J1.

(19) 10 MHz OVEN OUTPUT. This signal is present only in instruments with Option 001. To make use of the Oven Output, it must be connected to the REF IN connector, Item 21. A special connector, -hp- Part No. 1250-1499, is supplied with Option 001 for this purpose. J3.

(20) AC POWER input connector. E1.

(21) REF IN. An external reference may be used to phase lock the internal 30 MHz reference (see Paragraph 3-16). J4.

(22) HP-IB connector. Remote control of the 3325A by means of an HP-IB system controller is accomplished through this connector. Part of W6.

(23) REF OUT. A 1 MHz signal from the 3325A reference circuits is available at this connector. J5.

(24) SIGNAL. The output signal is switched to this connector by the front panel REAR ONLY key, Item 17. J6. (Instruments with Option 002 do not have rear panel signal output.)

NOTE

The rear panel signal output is inactive (no internal signal connection) if the instrument has the High Voltage Output Option 002 installed. Instructions are given in the Operating and Service Manual, Section VIII, Service Group M, for activating the rear panel signal output in one of two ways: 1) Placing the standard/high voltage output on the rear panel only, disconnecting the front panel signal output, or 2) Disabling the high voltage output and enabling the standard front/rear output configuration.

If the standard instrument signal output is not terminated by an external 50-ohm load (a high impedance load, for example) undesirable distortion may result, particularly at higher frequencies. Similar conditions may result if the High Voltage Output (Option 002) is terminated by less than 500 ohms.

(25) *BLOWER, B1.*

(26) PHASE MOD. Input connector for a phase modulating signal of ±5 V maximum peak voltage (see Paragraph 3-66). J7.

(27) AMPTD MOD. Input connector for an amplitude modulating signal of ±5 V maximum peak voltage (see Paragraph 3-62). J8.

(28) SYNC OUT. This output is identical to the output at the front panel sync connector, Item 15. J10.

(29) AUX 21-60 MHz. A signal is available at this output when the sine wave frequency is programmed above 21 MHz (see Paragraph 3-34). J9.

(30) Z BLANK. A TTL compatible output is present during a sweep operation (see Paragraph 3-60). J11.

(31) X DRIVE. This output progresses from 0 V to +10 V during a sweep-up operation (see Paragraph 3-58). J12.

(32) MARKER. This TTL compatible output goes low at the selected marker frequency during a sweep up, and high at completion of the sweep (see Paragraph 3-55). J13.

(33) Power Transformer, T1.

(34) Line Fuse, F1.

NOTE

The HP-IB is Hewlett-Packard Company's implementation of IEEE Standard 488-1978.

3-3. PANEL FEATURES.

3-4. Figure 3-1 identifies and describes the functions of the front and rear panel controls, indicators, and connectors.

3-5. POWER/WARM-UP.

3-6. The Model 3325A requires a power source of 100, 120, 220, or 240 Vac, +5% -10%, 48 to 66 Hz single phase. The selection of line voltage and fuse is described in Paragraph 2-8 and Figure 2-1.

3-7. The 3325A POWER switch has two positions, STBY and ON. Power is applied to some circuits at any time the instrument is connected to the ac power source. If the instrument has the Oven Assembly Option 001 installed, it is important that it remain connected to the power source to maintain a constant oven temperature, eliminating the need for a long warm-up period. If an instrument with the Oven Assembly has been disconnected from ac power no longer than 24 hours, a 15-minute warmup period is sufficient to bring the reference frequency to within $\pm 1 \times 10^{-7}$ of final value.

3-8. INITIAL CONDITIONS.

3-9. After the POWER switch has been set to ON, the instrument status will be as follows:

Function ..... Sine
Frequency ..... 1000 Hz
Amplitude ..... 1 mV p-p
Phase ..... 0 deg
DC Offset ..... 0 V
Front Signal Output
Sweep ..... Linear
  Start Frequency ..... 1 MHz
  Stop Frequency ..... 10 MHz
  Marker Frequency ..... 5 MHz
  Time ..... 1 sec

NOTES

1. If the display reads OSC FAIL the frequency synthesis circuits are not operating properly.

2. If A-CAL FAIL appears in the display momentarily after turn-on, any one of the three AMPTD CAL tests could be incorrect. Perform a SELF TEST operation to identify the failure.

3. If either of the above conditions occurs, refer the instrument to qualified service personnel for repair.

3-10. SELF TEST.

3-11. The self test operation is initiated by pressing the blue prefix key, then the SELF TEST key (AMPTD CAL). This test uses the control, ROM, and control clock circuits to perform the following checks:

LED check: Turns on all LED's for about 2 seconds
Check 1: Tests AMPTD CAL of the sine wave
Check 2: Tests AMPTD CAL of the square wave
Check 3: Tests AMPTD CAL of the triangle wave

Following each check the display indicates either PASS or FAIL for approximately one second. If all tests pass, this indicates that approximately 60% of all circuits are operating properly.

3-12. FRONT/REAR SIGNAL OUTPUT.

CAUTION

The maximum peak voltage that can be safely applied between chassis and the outer conductor of any of the 3325A input or output signal connectors is ±42 V.

3-13. The standard Model 3325A provides selectable front or rear panel 50-ohm signal outputs. The rear panel signal output is selected by pressing the REAR ONLY key. The lighted indicator in the center of this key denotes that the signal output is at the rear panel.

NOTE

The rear panel SIGNAL output is not present on instruments equipped with the High Voltage Output Option 002.

3-14. SYNC OUTPUT.

3-15. A square wave sync output is provided at BNC connectors on both the front and rear panels. This sync signal is always in phase with the output signal, with the sync transition occurring at the signal zero crossing, or when the signal crosses the dc offset voltage. The output impedance of either front or rear panel sync output is approximately 50 ohms. When connected to a 50-ohm coaxial cable that is terminated by a 50 ohm resistive load, the sync signal levels are as follows:

Low Level = < 0.2 V
High level = > 1.2 V

NOTE

If a sync output is connected to a 50-ohm coaxial cable that is terminated by a high impedance load (≥ 1 megohm) the voltage levels are approximately twice the values given above. However, the improper ter-

mination of the 50-ohm system will cause ringing at the positive and negative transitions of the sync signal.

3-16. EXTERNAL REFERENCE INPUT.

3-17. The 3325A may be operated with an external reference to control the standard 30 MHz internal reference oscillator frequency. The external reference level must be greater than 0 dBm (50 ohms), and the frequency must be within 10 PPM of 10 MHz or a submultiple thereof down to 1 MHz (10, 5, 3.33, 2.5, or 1 MHz). The front panel EXT REF annunciator will light to indicate that an external reference is being used. The internal reference oscillator is phase locked to the external reference, and a phase lock detector circuit causes the EXT REF light to flash if synchronization is lost.

3-18. 10 MHz OVEN OPTION 001.

3-19. Option 001 is a temperature stabilized 10 MHz oscillator which provides improved frequency stability (see specifications in Table 1-1). The output from this oscillator is at the rear panel 10 MHz OVEN OUTPUT connector. This output must be connected to the EXT REF input. A special connector, -hp- Part No. 1250-1499, is provided with Option 001 for this purpose.

3-20. MANUAL PROGRAMMING.

3-21. The following paragraphs describe the procedures for operating the 3325A from the front panel. Also included are the limits for each parameter.

3-22. Clear Display.

3-23. Pressing the CLEAR key (in the left column of the DATA group) clears the display to zero. This key is useful when an error is made while entering data.

3-24. Entry Errors.

3-25. The word "Error" will appear in the display for approximately one second when an error in programming occurs. The incorrect entry will not be accepted.

ASCII Numeric	Error
1	Entry parameter out of bounds (for example, Freq ≥ 61 MHz)
2	Invalid delimiter
3	Frequency too large for function (for example, Function = Triangle, Freq ≥ 11 kHz)
4	Sweep time too small or too large
5	Offset incompatible with amplitude, or amplitude incompatible with offset
6	Sweep frequency too large for function; Sweep bandwidth too small; Start frequency too small (log sweep); Start frequency greater than stop frequency (log sweep)
7	Unrecognizable mnemonic received
8	Unrecognizable data character received
9	Option does not exist (High Voltage or Rear/Front)

3-26. Function Selection.

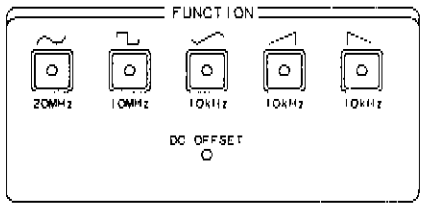

3-27. Any of the five functions may be selected by pressing the appropriate FUNCTION key. A light in the center of the key indicates the present function. Pressing the same key the second time removes the ac signal, setting the output to zero unless a dc offset has been programmed (see Paragraph 3-43). When the ac signal is removed in this way, the instrument automatically displays dc offset, and the dc offset entry key light comes on. The ac signal can be restored by pressing the FUNCTION key again. The output signal for each function is centered about zero volts unless a dc offset has been programmed.

NOTE

The standard instrument signal output must be terminated by an external 50-ohm load or sine wave distortion and square wave overshoot may result, particularly at higher frequencies.

3-28. Frequency Entry.

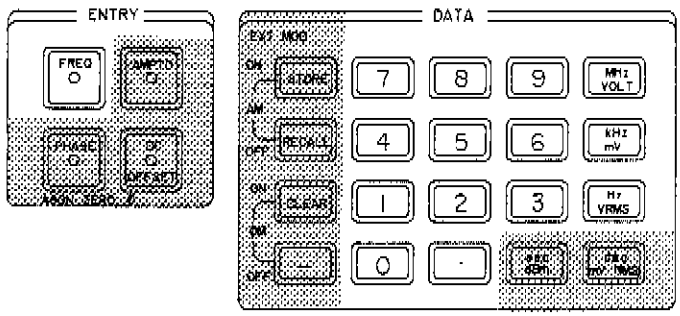

NOTE

A lighted indicator in the center of any entry key denotes it as the active entry parameter. For example, if the FREQ entry key indicator is on, it is not necessary to press that key before entering data.

3-29. Enter frequency by first pressing the FREQ ENTRY key, then the numerical data, followed by the data suffix (delimiter) key (Hz, kHz, MHz). Numerical data must be entered most significant digit first, entering the decimal in the proper place. The frequency parameter is stored in the 3325A when the delimiter key is pressed.

3-30. Frequency Limits.

3-31. The minimum frequency for all functions is 1 μHz. The nominal maximum frequency for each function is shown below the function select key on the front

Table 3-2. Amplitude Limits of AC Functions.

Function	Peak-to-Peak		rms		dBm (50 Ω)	
	Max.	Min.	Max.	Min.	Max.	Min.
Sine	10 V	1 mV	3.536 V	0.354 mV	+23.98	-56.02
Square	10 V	1 mV	5.000 V	0.5 mV	+26.99	-53.01
Triangle	10 V	1 mV	2.888 V	0.289 mV	+22.22	-57.78
± Ramp	10 V	1 mV	2.888 V	0.289 mV	+22.22	-57.78

panel. However, because of the overrange capability of the 3325A, the maximum frequency for each function is as shown below:

Sine wave	20 999 999.999 Hz
Square wave	10 999 999.999 Hz
Triangle	10 999.999 999 Hz
Positive slope ramp	10 999.999 999 Hz
Negative slope ramp	10 999.999 999 Hz

3-32. Frequency Display and Resolution.

3-33. Frequency is always displayed in Hz, even though the entry may have been made in kHz or MHz. For example, an entry of 1.2 MHz is displayed as 1 200 000.0 Hz. Non-significant zeroes to the right of the first digit following the decimal point are not displayed except during a "modify" condition (see Paragraph 3-68). The maximum resolution is 1 μHz for frequencies up to and including 99 999.999 999 Hz, and 1 mHz for frequencies of 100 000.000 Hz and higher.

3-34. Auxiliary Output (Sine Function Only).

3-35. A rear panel auxiliary output can be used for frequencies above 19 MHz to a maximum of 60 999 999.999 Hz. The output level is a nominal 0 dBm into 50 ohms. The output automatically switches to the AUX output when frequencies of 21 000 000.000 Hz or higher are programmed. For this reason, the AUX output is labeled "21-60 MHz". Frequencies between 19 MHz and 21 MHz can be obtained at the AUX output only by first entering 21 MHz or higher, then entering the desired frequency. For example, if the desired frequency is 19.5 MHz, first enter "FREQ 21 MHz", then "19.5 MHz". Then, if a front panel SIGNAL output of 19.5 MHz (or any frequency between 19 MHz and 21 MHz) is desired, enter any frequency 19 MHz or lower, then enter 19.5 MHz.

NOTE

Only one signal output is active at one time. A lighted "21-60 MHz Rear" annunciator indicates that the rear panel AUX, 0 dBm, 21-60 MHz output is active. A lighted "Signal, Rear Only" annunciator indicates that the rear panel signal output is active. Neither light on, indicates the front panel signal output is active.

3-36. Amplitude Entry.

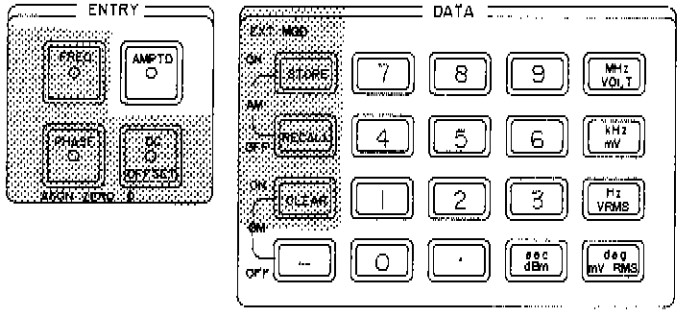

3-37. Amplitude is entered and displayed with 4-digit resolution. Press the AMPTD ENTRY key, then the numerical data, followed by the V, mV, Vrms, mVrms, or dBm key. The V and mV keys enter peak-to-peak value of ac functions. Maximum and minimum amplitudes for each function are shown in Table 3-2.

3-38. The 3325A will convert an amplitude value between peak-to-peak, rms, or dBm for any function. For example, if a sine wave amplitude of 10 V p-p has been entered, press the Vrms or mVrms key to display the same amplitude as 3.536 Vrms, or press the dBm key to display the value as (+)23.98 dBm.

3-39. Amplitude Calibration.

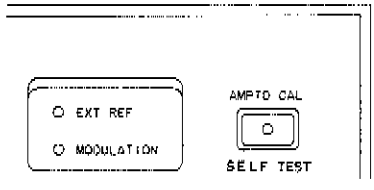

3-40. The 3325A will calibrate the output signal when the AMPTD CAL key is pressed. The output goes to less than 4 mV p-p while the calibration is in process. An amplitude and offset calibration is performed automatically whenever the function is switched and at instrument turn-on.

NOTE

If A-CAL FAIL appears in the display momentarily after an AMPTD CAL operation, the instrument should be referred to qualified service personnel for repair.

3-41. High Voltage Output Option 002.

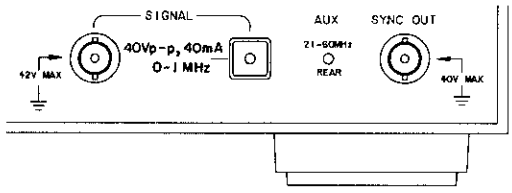

3-42. The high voltage output is selected by pressing the key in the lower right corner of the front panel. This option provides a maximum output of 40 V p-p into a high impedance. The load resistance must be greater than 500 ohms or distortion will result, particularly at higher frequencies. To assure square wave overshoot $<5\%$ of peak-to-peak output, the total capacitance connected to the output should be <500 pF. The same entry procedures and display features apply as in the standard operation. Maximum and minimum amplitudes are shown in Table 3-3. Maximum frequency for sine and square wave functions is 1 MHz (10 kHz for triangle and ramps).

NOTE

The rear panel signal output is inactive (no internal signal connection) if the instrument has the High Voltage Output Option 002 installed. Instructions are given in the Operating and Service Manual, Section VIII, Service Group M, for activating the rear panel signal output in one of two ways: 1) Placing the standard/high voltage output on the rear panel only, disconnecting the front panel signal output, or 2) Disabling the high voltage output and enabling the standard front/rear output configuration.

3-43. DC Offset.

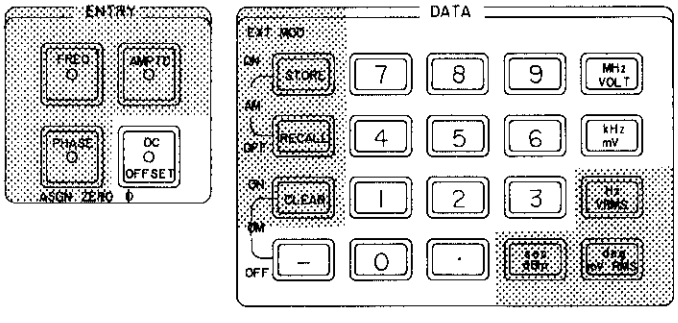

Table 3-3. High Voltage Output Amplitudes (Option 002).

Function	Peak-to-Peak		rms	
	Max.	Min.	Max.	Min.
Sine	40 V	4 mV	14.14 V	1.42 mV
Square	40 V	4 mV	20.0 V	2.0 mV
Triangle	40 V	4 mV	11.55 V	1.16 mV
± Ramp	40 V	4 mV	11.55 V	1.16 mV

3-44. Offset Only, No AC Function. When no ac function is present, the dc voltage output may be programmed from 0mV to ±5V, with 4 digit resolution. When no ac function is present, the DC OFFSET entry prefix is automatically selected. It is necessary merely to enter the numerical data followed by the V or mV delimiter. The rms keys cannot be used to enter offset.

NOTE

When the High Voltage Output is selected (Option 002), minimum amplitude for dc only (no ac function) is 0.01 mV and maximum is 20.0 V.

3-45. Offset with AC Function. When dc offset is to be added to any ac function, there are minimum and maximum offset limits which must be observed. These limits are affected by the ac voltage and the resulting attenuator settings, which are shown in Table 3-4. Figure 3-2 is a set of graphs which show the approximate maximum dc offset permissible for a given ac peak-to-peak voltage. The following equation may be used to determine maximum offset voltage.

$$\text{Maximum dc offset} = \frac{5}{A} - \frac{\text{Amptd}}{2}$$

Where A = Attenuator factor (from Table 3-4)
Amptd = Amplitude in V p-p of the ac function

NOTES

1. If an attempt is made to enter a dc offset that is too great for the amplitude already programmed, "Error 5" will appear in the display momentarily, and the dc offset entry will not be accepted.

2. After a dc offset has been entered, if the amplitude (ac) is then increased beyond the level where the amplitude and offset are compatible, "Error 5" will appear in the display momentarily, and the ac amplitude entry will not be accepted.

3. The minimum and maximum permissible dc offset voltages when the High Voltage Output is selected (Option 002) may be determined by multiplying the amplitude and offset values in Table 3-4 by four. This also applies for Figure 3-2. Change the above equation (for determining maximum dc offset) to the following:

$$\text{Maximum dc offset} = \frac{20}{A} - \frac{Amptd}{2}$$

4. Resolution of a dc offset entry (with ac function) is determined by the resolution of the ac amplitude.

3-46. Phase Entry.

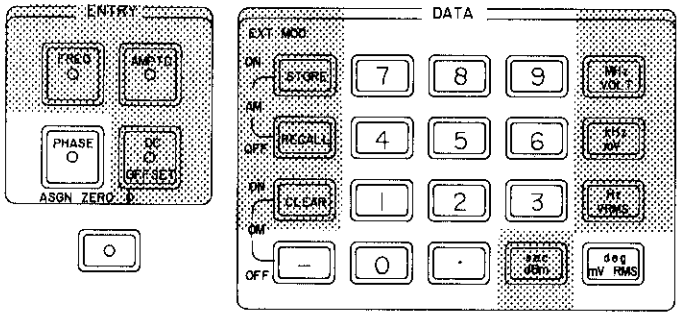

3-47. The phase of the SIGNAL output can be shifted up to ±719.9° with respect to the 1 MHz REF OUT (rear panel). Phase shift entry resolution is 0.1°. To program phase shift, press the PHASE ENTRY key, enter number of degrees of phase desired, then press the "deg" key. For a negative phase shift, press the "−" key before entering the numerical data. For square wave frequencies below 25 kHz, phase changes greater than 25° may result in a phase shift ±180° from the desired amount.

3-48. After entering a phase shift, the new phase may be assigned the zero phase position, and subsequent changes in phase referenced to that point. To assign zero phase, press the blue entry prefix key, then press ASGN ZERO Ø (PHASE) key.

3-49. Frequency Sweep.

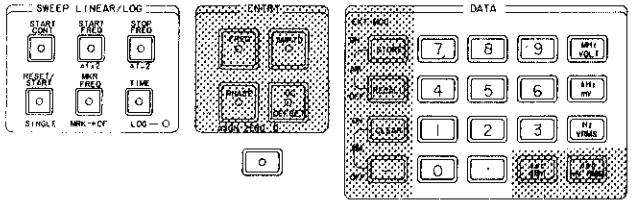

3-50. Frequency sweep is phase continuous over the full frequency range; that is, there are no discontinuities in the output waveform. When the instrument is turned on, the sweep mode is set to linear, and the parameters are set as follows:

Start Frequency.....1 000 000.0 Hz
Stop Frequency.....10 000 000.0 Hz
Marker Frequency.....5 000 000.0 Hz
Time.....1.0 sec

Table 3-4. Maximum DC Offset with any AC Function.

AC Amplitude Entry (peak-to-peak)		Maximum DC Offset (+ or −)	Minimum DC Offset Entry	Range	Attenuation Factor
1.000 mV to 3.333 mV	with	4.500 mV with 3.333 mV	0.001 mV	7	A = 1000
3.334 mV to 9.999 mV	with	14.99 mV with 11.66 mV	0.001 mV	6	A = 300
10.00 mV to 33.33 mV	with	45.00 mV with 33.33 mV	0.010 mV	5	A = 100
33.34 mV to 99.99 mV	with	149.9 mV with 116.6 mV	0.010 mV	4	A = 30
100.0 mV to 333.3 mV	with	450.0 mV with 333.3 mV	0.100 mV	3	A = 10
333.4 mV to 999.9 mV	with	1.499 V with 1.166 V	0.100 mV	2	A = 3
1.000 V to 9.998 V	with	4.500 V with 0.001 V	1.000 mV	1	A = 1

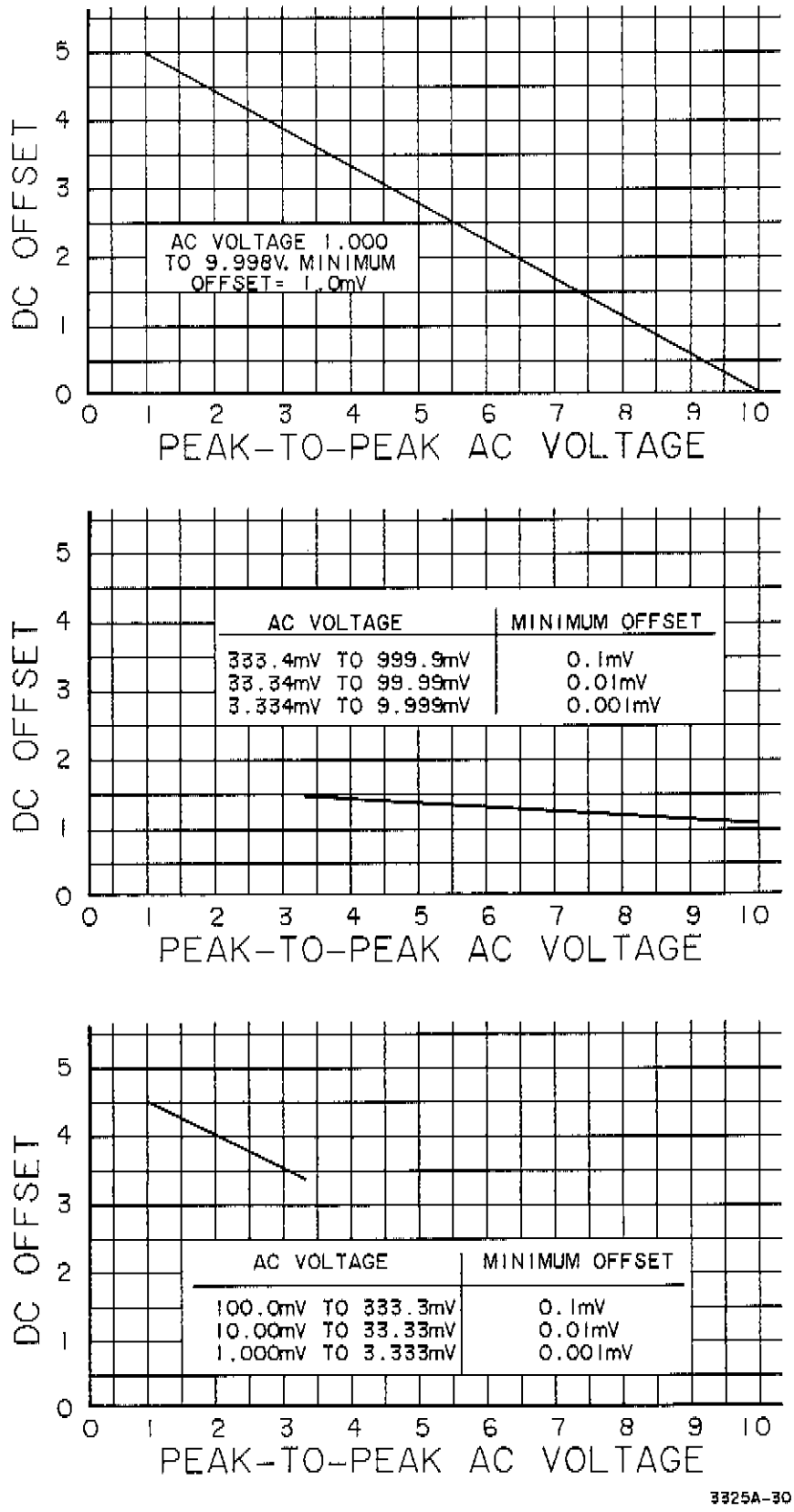

Figure 3-2. Maximum DC Offset With AC Functions.

NOTE

The Marker Frequency must be lower than Stop Frequency by a sufficient amount to permit the Marker pulse width to be approximately 400 microseconds. See Paragraph 3-55.

To change any of the sweep parameters, press the appropriate SWEEP entry key, then enter the desired data. To select LOG sweep, press the blue prefix key and then the LOG (TIME) key. The log indicator should light. The sweep mode is linear unless this light is on.

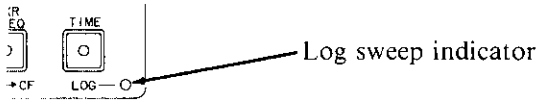

3-51. Linear Sweep. In linear mode, either CONTINUOUS or SINGLE sweep may be used. Single sweep is from START to STOP frequency, and either START or STOP may be the higher frequency. To begin a single sweep:

Press "RESET/START" key to set output and display to the start frequency selected and reset the X Drive ramp.

Press "RESET/START" key again to start the sweep.

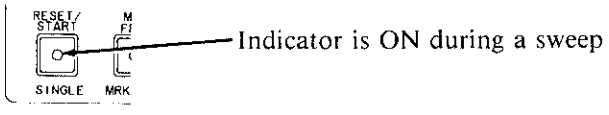

The output frequency sweeps to the STOP frequency selected and remains there. This frequency appears in the display. Continuous sweep is up-down-up, etc., and begins when the "START CONT" key is pressed. Continuous sweep may be stopped by pressing the "START CONT" key again, or by pressing "START SINGLE", "FREQ ENTRY", or "PHASE ENTRY". The display will indicate the frequency at which the sweep stopped. The sweep will stop while any other parameter is being changed, then will restart. Pressing "AMPTD CAL", "SELF TEST", "ASSIGN ZERO Ø", or changing the function will also stop continuous sweep.

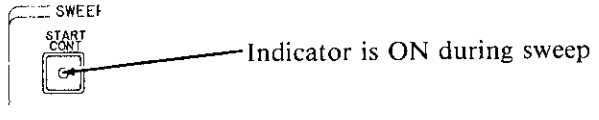

3-52. Log Sweep. In either single or continuous log sweep mode, the stop frequency must be higher than the start frequency, and sweep is up only. (Continuous sweep is start to stop, start to stop, etc.) The minimum bandwidth for log sweep is one decade. Single log sweep is a line-segmented log approximation in one-tenth decade segments, and continuous log sweep is a two-segment log approximation.

NOTE

Because of the computation time required by the control circuits in log sweep, the actual stop frequency (which is displayed at the end of a single sweep) will be higher than the selected stop frequency, but always within 0.25%. The error decreases as sweep time is increased.

3-53. Sweep Time. The maximum time per sweep (up or down) for all sweep modes is 99.99 seconds, with .01 second resolution for times ≥ 1 second, and .001 second resolution for times < 1 second. Minimum times are as follows:

Linear sweep, single or continuous . . . 0.010 s
Log sweep
Single . . . . . 2.000 s
Continuous . . . . . 0.100 s

NOTE

In single log sweep, the sweep time is increased by the processing time required between segments. The time increase (in seconds) is approximately equal to

$$.045 \left(10 \log \frac{\text{stop frequency}}{\text{start frequency}} \right)$$

3-54. Sweep Bandwidth. The maximum sweep bandwidth is the full frequency range for the function selected, except that in log sweep, the minimum frequency is 1 Hz. The minimum bandwidth for log sweep is one decade. Minimum bandwidth for each function (linear sweep) is as follows:

Sine . . . . . (10 mHz/s) × (sweep time)
Square . . . . . (5 mHz/s) × (sweep time)
Triangle . . . . . (0.5 mHz/s) × (sweep time)
Ramps . . . . . (1 mHz/s) × (sweep time)

For sweep bandwidths of less than 100 times the minimum, Bandwidth selected should be an integral multiple of the minimum. In linear sweep mode the sweep bandwidth may be multiplied or divided by two by pressing the blue prefix key and then "Δfx2" or "Δf÷2". These bandwidth modification keys do not operate in log sweep mode.

3-55. Sweep Marker.

3-56. The marker frequency may be set to any point within the sweep band up to within approximately 400 microseconds of the stop frequency. If the marker frequency is set beyond this point, the stop frequency will automatically be increased so that the marker pulse is

approximately 400 microseconds wide. The following equation may be used to determine the approximate maximum marker frequency:

$$\text{Max. marker freq.} = \text{stop freq.} - \frac{.0004 \times \text{bandwidth}}{\text{sweep time}}$$

The rear panel MARKER output is at TTL compatible voltage levels. It is High at the start of a sweep up, goes Low at the selected marker frequency, then High again at the stop frequency. No marker output is present during sweep down or during a log sweep. Set the marker frequency by pressing the "MKR FREQ" key and entering the numerical data and the frequency suffix.

3-57. The sweep band can be moved up or down to center on the marker frequency by pressing the blue prefix key and then the MKR → CF(MKR FREQ) key. This does not change the sweep bandwidth unless either the new upper or lower limit would be beyond the frequency limit for the present function.

3-58. Sweep X Drive Output.

3-59. The rear panel X DRIVE output is as follows:

Linear sweep:

Single: 0 V at start, increasing linearly to > +10 V at stop, whether the sweep is up or down. Remains at essentially this voltage until reset prior to the start of another sweep. (Voltage will drift downward less than 10 mV/s.)

Continuous: Increases linearly from 0 V to > +10 V during sweep up, then goes to 0 V at beginning of sweep down and remains at 0 V during sweep down.

Log sweep: Starts at 0 V and increases to > +10 V with the sweep segments.

NOTE

The X DRIVE output has a nominal voltage of +10.5 V at the end of a sweep. This final voltage is specified to be greater than 10.0 V to ensure compatibility with oscilloscopes having a horizontal sensitivity of 10.0 V for full-screen deflection.

X DRIVE output voltage is linear with time in both linear and log sweep modes.

3-60. Sweep Z Blank Output.

3-61. The Z BLANK output voltages are TTL compatible, and the output logic levels are as follows:

Linear sweep:

Single: Goes LOW at start of sweep, HIGH at stop, whether the sweep is up or down. Remains until start of next sweep.

Continuous: LOW during sweep up, HIGH during sweep down.

Log sweep: Goes LOW at start frequency, HIGH at stop. In single sweep, remains HIGH until start of next sweep. In continuous sweep, is HIGH momentarily at stop frequency.

When the Z BLANK output is low, it is capable of sinking current through a relay or other device. The maximum ratings are:

Maximum current sink: 200 mA
Allowable voltage range: 0 V to +45 V dc
Maximum power (voltage at output x current): 1 W

3-62. Amplitude Modulation.

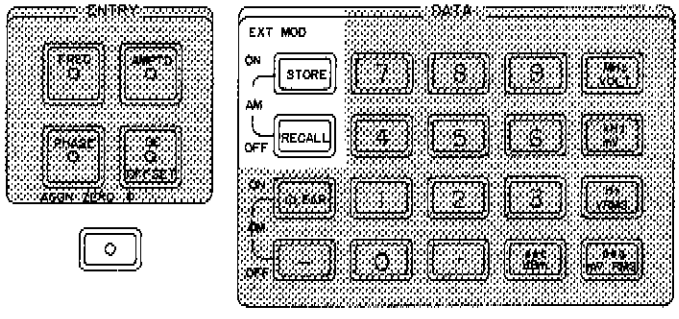

3-63. To program amplitude modulation, press the blue prefix key, then press the "AM ON" (STORE) key. To remove the modulation, press the blue key, then "AM OFF" (RECALL). The display shows "A ON" or "A OFF" momentarily to indicate the status of the amplitude modulation. The status of phase modulation (P ON or P OFF) is displayed at the same time. The modulation input must be connected to the rear panel AMPTD MOD input. The impedance of this input is 20 kΩ (10 kΩ when AM is OFF).

3-64. When amplitude modulation is programmed, the amplitude of the output signal (with no modulation) is halved; however, the display still indicates the programmed amplitude. Then, when the output (carrier) is modulated 100%, the maximum amplitude of the modulated output equals the programmed amplitude. A modulation input of approximately 5 V peak results in 100% modulation. Modulation frequency may be 0 to 50 kHz. If amplitude modulation is ON when 3325A functions other than sine wave are selected, the output may be gated, depending on the level of the modulation input. Amplitude modulation should be used only with the sine wave function, and the modulation input should not exceed ±10 V peak.

3-65. A dc voltage may be applied to the AMPTD MOD input to control the 3325A output level, or a pulse may be used to gate the output. Approximately +5 V cuts off the output signal, while approximately -5 V doubles the output. (Maximum output is 10 V p-p.) DC or pulse inputs should not exceed ±5 V peak.

3-66. Phase Modulation.

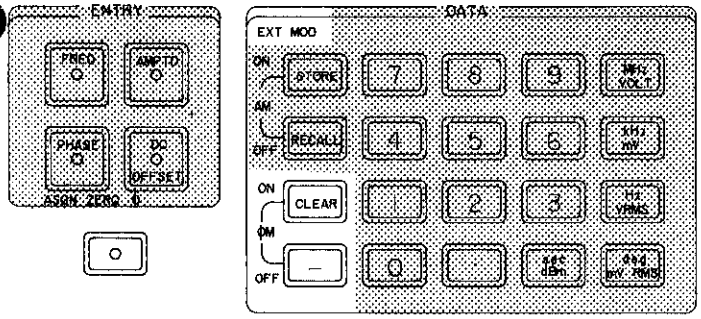

3-67. To program phase modulation, press the blue prefix key, the the "ØM ON" (CLEAR) key, and to remove phase modulation, press the blue key, then "ØM OFF" (-). The phase modulation signal at the rear panel PHASE MOD input may be up to ±10 V peak. The input impedance is 10 kΩ. The modulating signal frequency may be dc to 5 kHz. An input of ±5 V results in the following approximate phase deviation (±170° per volt for sine function):

3325A Function	Phase Deviation
Sine	±850°
Square	±425°
Triangle	±42.5°
± Ramp	±85°

3-68. Modify Keys.

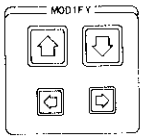

3-69. The numerical data of any parameter may be changed by use of the MODIFY keys. First press the prefix key of the parameter to be modified, placing the information in the display. Next, press the ◁ or ▷ key to move the bright digit cursor to the digit you want to modify. Then press the △ or ▽ key momentarily to increase or decrease the value of that digit by 1. If the modify key is held, the digit will continue to increment or decrement after a slight delay. As the modified digit passes 9 (incrementing) or 0 (decrementing) the digit to its left will increment or decrement.

3-70. Store and Recall.

3-71. An entire program may be stored in any one of 10 registers by pressing the "STORE 0-9" key, then the register number. This stores all the information that is in the current program memory. Other programs may then be entered. All stored information is lost when power is removed from these circuits by setting the POWER switch to STBY or disconnecting ac power from the instrument.

NOTE

Any phase information stored is invalid when recalled because the instrument performs an amplitude calibration on RECALL. Phase relationship between the output signal and the reference is not maintained when AMPTD CAL occurs.

3-72. OPERATOR'S CHECKS.

3-73. The following checks provide the operator with a means of determining whether the instrument is operational. They are not intended to verify any specifications. If the instrument fails any of these checks, it should be referred to qualified service personnel for repair.

3-74. Self Test.

3-75. Press the blue prefix key, then SELF TEST (AMPTD CAL). All the front panel display and annunciator LED's should light for approximately two seconds, then the instrument performs an automatic calibration of the sine, square, and triangle functions and the display indicates momentarily whether each test passed or failed. The dc offset is also checked in these tests.

NOTE

If the display reads OSC FAIL at any time, the frequency synthesis circuits are not functioning properly. Refer the instrument to qualified service personnel for repair.

3-76. Output Checks.

3-77. An oscilloscope (-hp- 1740A or equivalent) is required for these checks. Connect the 3325A output through a 50-ohm feedthru termination (-hp- 11048C) to the oscilloscope input (input dc coupled), or set the 1740A input switch to 50 ohms.

FUNCTIONS

a. Make the following 3325A keyboard selections:

FUNCTION ..... Sine
FREQUENCY ..... 2 kHz
AMPLITUDE ..... 10 V p-p

b. Set the oscilloscope controls as follows:

Vertical ..... 5 V/div
Horizontal ..... 0.5 ms/div
Trigger ..... Auto

c. Adjust oscilloscope controls for a stable display, which should show a sine wave approximately two divisions peak-to-peak and one cycle per division.

d. Select square wave, triangle, positive slope ramp, and negative slope ramp and verify that each function indicates the same frequency and peak-to-peak amplitude.

AMPLITUDE AND DC OFFSET

e. Set the 3325A as follows:

FUNCTION ..... Square
FREQUENCY ..... 2 kHz
AMPLITUDE ..... 10 V p-p

f. Set the oscilloscope controls as follows:

Vertical ..... 2 V/div
Horizontal ..... 0.5 ms/div
Trigger ..... Auto

g. Oscilloscope display should show one square wave per division, 5 divisions peak-to-peak vertical. This checks the output with no attenuation. Actual display will depend greatly upon the accuracy of the oscilloscope amplifiers and display.

h. Change 3325A amplitude to 1 V p-p, and change oscilloscope vertical to .2 V/div. Oscilloscope display should again be 5 divisions peak-to-peak. This checks the ÷ 3 attenuator section.

i. Change 3325A amplitude to 500 mV p-p, and change oscilloscope vertical to .1 V/div. Oscilloscope display should be 5 divisions peak-to-peak. This checks the ÷ 10 attenuator section.

j. Change 3325A amplitude to 50 mV p-p, and change oscilloscope vertical to .01 V/div. The square wave display should be 5 divisions peak-to-peak. This checks the ÷ 100 attenuator section.

k. Press the 3325A SQUARE WAVE FUNCTION key to remove the square wave output. The indicator in the DC OFFSET Entry key should light and the 3325A display should show 0.0 mV.

l. Set the oscilloscope vertical control to 2 V/div. Ground the input and set the trace to the center line. Set input to dc coupled.

m. Enter 5 V offset in the 3325A. The oscilloscope trace should be 2.5 divisions above the center line. Enter 5 V offset in the 3325A. The oscilloscope trace should go to 2.5 divisions below the center line.

n. Enter Ø V offset in the 3325A. Trace should be on the center line.

FREQUENCY

o. Set the 3325A as follows:

FUNCTION ..... Sine
FREQUENCY ..... 100 Hz
AMPLITUDE ..... 10 V p-p

p. Set the oscilloscope controls as follows:

Vertical ..... 2 V/div
Horizontal ..... 1 ms/div

q. Oscilloscope display should show one cycle of sine wave, which should be free of any apparent irregularities.

r. Enter 20 MHz in the 3325A. Change oscilloscope horizontal to .05 μs/div. Oscilloscope should display one cycle of sine wave per division.

HIGH VOLTAGE OUTPUT (OPTION 002)

s. Remove the 50-ohm feedthru termination between the 3325A output and the oscilloscope input. Press the key in the lower right corner of the 3325A front panel to select the High Voltage output.

t. Set the 3325A as follows:

FUNCTION ..... Sine
FREQUENCY ..... 2 kHz
AMPLITUDE ..... 40 V p-p

u. Set the oscilloscope controls as follows:

Vertical ..... 10 V/div
Horizontal ..... 0.5 ms/div

v. The oscilloscope display should show a sine wave four divisions peak-to-peak, one cycle per division. This checks the high voltage output amplifier.

3-78. OPERATOR'S MAINTENANCE.

3-79. Maintenance by the operator is limited to cleaning or replacing the rear panel fan filter, or replacing the ac line fuse on the rear panel. Generally, if the ac line fuse requires replacement there is a failure within the instrument, which should be referred to qualified service personnel. Disconnect the ac line cord before replacing the fuse. Be sure to use the correct replacement fuse:

Nominal Line Voltage	Fuse	-hp- Part No.
100/120 V	1 A	2110-0001
220/240 V	0.5 A	2110-0012

3-80. The fan filter should be inspected frequently and cleaned or replaced as necessary to allow free flow of air. To remove the filter, disconnect ac power from the instrument and remove the four nuts that secure the filter retainer. Remove the filter and wash thoroughly with soapy water, rinse clean, and air dry.

3-81. HP-IB OPERATION.

3-82. The Model 3325A is remotely controlled by means of the Hewlett-Packard Interface Bus (HP-IB).

The following information gives a general description of the HP-IB and defines the terms, concepts, and messages used in an HP-IB system. It also lists the capabilities and requirements for programming the 3325A. Program examples using a specific Hewlett-Packard calculator as the system controller may be found in the Supplemental Programming Information, Appendix 3-A at the rear of this section.

NOTE

HP-IB is Hewlett-Packard Company's implementation of IEEE Standard 488-1978, "Standard Digital Interface for Programmable Instrumentation.

3-83. General HP-IB Description.

3-84. The HP-IB is a parallel bus of 16 active signal lines grouped into three sets according to function, to interconnect up to 15 instruments. Figure 3-3 is a diagram of the interface connections and bus structure.

3-85. Eight signal lines form the first set and are termed "data" lines. The data lines carry coded messages which represent addresses, program data, measurements, and status bytes. The same data lines are used for input and output messages in bit-parallel, byte-serial form. Normally, a seven-bit ASCII code represents each piece (byte) of data, leaving the eighth bit available for parity checking.

3-86. Data transfer is controlled by means of an interlocked "handshake" technique which permits data transfer (asynchronously) at the rate of the slowest device participating in that particular conversation. The three data byte transfer control lines which implement the handshake form the second set of lines.

3-87. The remaining five general interface management lines form the third set and are used in such ways as activating all the connected devices at once, clearing the interface, etc. Table 3-5 defines each of the management lines.

3-88. Definition of HP-IB Terms and Concepts.

Byte - A unit of information consisting of eight binary digits (bits).

Device - Any unit that is compatible with the IEEE Standard 488-1978.

Device Dependent - 1. An action a device performs in response to information sent on the HP-IB. The action is characteristic of an individual device and may vary from device to device. 2. The data required to communicate with a particular device.

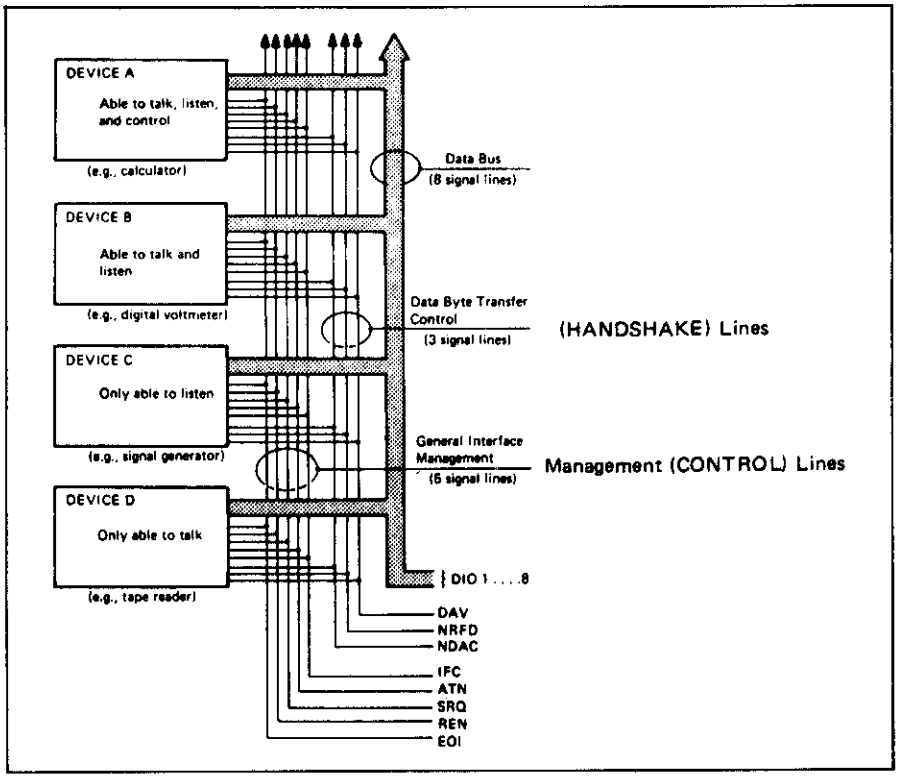

Figure 3-3. Interface Connections and Bus Structure.

Table 3-5. General Interface Management Lines.

Name	Mnemonic	Description
Attention	ATN	Enables a device to interpret data on the bus as a controller command (command mode) or data transfer (Data Mode).
Interface Clear	IFC	Initializes the HP-IB system to an idle state (no activity on the bus.)
Service Request	SRQ	Alerts the controller to a need for communication.
Remote Enable	REN	Places instruments under remote program control.
End Or Identify	EOI	Indicates last data transmission during a data transfer sequence; used with ATN to poll devices for their status.

Operator - The person that operates either the system or any device in the system.

Address - The characters sent by a controller to specify which device will send information on the bus and which device(s) will receive information. A device may also have its address fixed so that it may only receive information (listen only) or only send information (talk only).

Polling - Polling is a means by which a controller can identify a device that needs interaction with it. The controller may poll devices for their operational condition one at a time, which is termed a serial poll, or as groups of devices simultaneously, which is termed a parallel poll.

3-89. Basic Device Communication Capability.

3-90. Devices which communicate along the interface bus fall into three basic categories.

Talkers - Devices which send information on the bus when they have been addressed.

Listeners - Devices which receive information sent on the bus when they have been addressed.

Controllers - Devices that can specify the talker and listener(s) for an information transfer. The controller can be an active controller or a system controller. The active controller is defined as the current controlling device on the bus. The system controller can take control of the bus even if it is not the active controller. Each system can have only one system controller, even if several controllers have system control capability.

3-91. Message Definitions.

3-92. Information is transferred on the HP-IB from one device to one or more other devices in quantities called "messages". Some of the messages consist of two basic parts, the address portion and the information portion. Others are general messages to all devices. Messages can be classified into twelve types, which are referred to as "meta messages". These are defined in Table 3-6. A block diagram presentation of meta messages and their implementation will be found in Appendix A-3 at the rear of this section.

NOTE

The meta message in itself is not a program code or an HP-IB command. It is only intended as a tool to translate a program written as an algorithm into the controller's code.

3-93. 3325A Response to Messages.

3-94. The 3325A is capable of implementing only those messages indicated in Table 3-7. In order for those messages to be implemented, certain bus actions are required, which are shown in the Interface Functions column.

3-95. HP-IB Work Sheet.

3-96. A work sheet is provided at the end of this section for listing the address and message capabilities of each instrument in your HP-IB system. When this sheet is filled out, it will provide a summary of the system capabilities.

3-97. HP-IB Addressing.

3-98. Certain messages require that a specific talker and listener be designated. Each instrument on the bus has its own distinctive listen and/or talk address which distinguishes it from other devices. The 3325A receives programming instructions when addressed to listen. When addressed to talk, it will respond to the instructions it received prior to being addressed to talk, such as an interrogation or serial poll.

3-99. Addressing usually takes the form of "universal unlisten, device talk, device(s) listen". The universal unlisten command removes all listeners from the bus, allowing only the listener(s) designated by the device(s) listen parameter to receive information. The information is sent by the talker designated by the device talk parameter. The system controller may designate itself as either talker or listener.

3-100. 3325A REMOTE PROGRAMMING.

3-101. 3325A HP-IB Capabilities.

3-102. Table 3-8 lists the HP-IB capabilities of the 3325A, which are compatible with IEEE Standard 488-1978.

Table 3-6. Definition of Meta Messages.

Message	Definition
Data	The actual information (binary bytes) which is sent from a talker to one or more listeners. The information or data can be in a numeric form or a string of characters.
Trigger	The trigger message causes the listening device(s) to perform a device-dependent action.
Clear	A clear message will cause a device(s) to return to a predefined device-dependent state.
Remote	The remote message causes the listening device(s) to switch from local front panel control, to remote program control. This message remains in effect so that devices subsequently addressed to listen will go into remote operation.
Local	This message clears the remote message from the listening device(s) and returns the device(s) to local front panel control.
Local Lockout	The local lockout message is implemented to prevent the device operator from manually inhibiting remote program control.
Clear Lockout and Set Local	This message causes all devices to be removed from the local lockout mode and revert to local. It will also clear the remote message for all devices.
Require Service	A device can send this message at any time to signify that it needs some type of interaction with the controller. The message is cleared by the device's status byte message if it no longer requires service.
Status Byte	A byte that represents the status of a single device. One bit indicates whether the device sent the required service message and the remaining 7 bits indicate operational conditions defined by the device. This byte is sent from the talking device in response to a "Serial Poll" operation performed by a controller.
Status Bit	A byte that represents the operational conditions of a group of devices on the bus. Each device responds on a particular bit of the byte thus identifying a device dependent condition. This bit is typically sent by devices in response to a parallel poll operation. The status bit message can also be used by a controller to specify the particular bit and logic level that a device will respond with when a parallel poll operation is performed. Thus, more than one device may respond on the same bit.
Pass Control	This message transfers the bus management responsibilities from the active controller to another controller.
Abort	The system controller sends the abort message to unconditionally assume control of the bus from the active controller. The message will terminate all bus communications but does not implement the clear message.

3-103. Developing an HP-IB Program.

3-104. Basically, the 3325A is programmed remotely in the same manner as it is programmed manually. The sequence in which the various parameters are programmed is not important. At the end of this section (III) there is a summary of the HP-IB Programming Codes. This chart may be removed from the manual and/or copied to be used as a programming reference.

NOTE

It may be necessary to refer to some paragraphs on manual operation for descriptions of certain signals and requirements.

3-105. Several steps are needed to develop an HP-IB program.

a. Completely define the operation(s) the system is required to perform.

b. Write the program in flowchart or algorithm form. (An algorithm may be defined as a fixed step-by-step procedure for finding a solution to a problem.) Use the key words for meta messages shown in Table 3-6 in developing the program. The twelve key words are repeated here for reference.

Data
*Trigger
Clear
Remote
Local
Local Lockout
Clear Lockout and Set Local
Require Service

Table 3-7. 3325A Implementation of Messages.

Message	Implementation*	Interface Functions** Sender	Interface Functions** Receiver	3325A Response
Data	SR	T, SH	L^n, AH	Will send or receive as instructed
Trigger	NA			
Clear	R	ID-LIST C, SH ALL C, SH	DC^n, L, AH DC, AH	Device Clear sets 3325A to initial turn-on conditions. See Para. 3-8.
Remote	R	Remote Enable ID-LIST,C_s,SH	RL^n, L, AH RL, AH	Goes to Remote. Can be set to Local by LOCAL key.
Local	R	C_s, SH	RL^n, AH	Goes to Local.
Local Lockout	R	C, SH	RL, AH	Goes to Remote. Cannot be set to Local by LOCAL key.
Clear Lockout and Set Local	R	C, SH C_s	RL	Goes to Local from Local Lockout.
Require Service	S		C	Sets SRQ True.
Status Byte	S	SR^n	L^n, AH	Sends byte which indicates if service required and reason.
Status Bit	NA			
Pass Control	NA			
Abort	R	C_s		Unaddress

*S = Send Only
R = Receive Only
SR = Send and Receive
NA = Not Applicable

**SH = Source Handshake
AH = Acceptor Handshake
T = Talker (includes TE = Extended Talker)
L = Listener (includes LE = Extended Listener)
SR = Service Request
RL = Remote/Local
PP = Parallel Poll
DC = Device Clear
DT = Device Trigger
C = Any Controller
C_N = A specific controller (for example, C_A, C_B)
C_s = The System Controller
X^n = Indicates replication n times

Status Byte
*Status Bit
*Pass Control
Abort

*Not implemented by the 3325A

NOTE

The meta message in itself is not a program code or an HP-IB command. It is only intended as a tool to translate a program written as an algorithm into the controller's code.

Table 3-8. Interface Functions.

Code	Function
SH1	Source handshake capability
AH1	Acceptor handshake capability
T6	Basic talker; Serial Poll; Unaddressed to talk if addressed to listen
L3	Basic listener; Listen Only; Unaddressed to listen if addressed to talk
SR1	Service Request capability
RL1	Remote/Local capability
PP0	No parallel poll capability
DC1	Device clear capability
DT0	No device trigger capability
C0	No controller capability
E1	Open collector bus drivers

c. Define the operation in program codes that the instrument can use. Each instrument has its own set of program codes which are ASCII characters. The 3325A program codes are shown beginning with Paragraph 3-120 or Table 3-9.

d. Convert the program into the controller's language. The conversion information is supplied with each controller. For example, the -hp- 9825A Calculator Extended I/O Manual provides a chart for program code conversion.

NOTE

Examples for controlling the 3325A with a specific Hewlett-Packard calculator are provided in the Supplemental Programming Information, Appendix B-3 at the rear of this section.

3-106. Block diagrams and explanations of the meta messages that apply to the 3325A are shown in Appendix A-3 at the rear of this section.

3-107. Universal and Addressed Commands.

3-108. The 3325A will respond to the following universal and addressed commands, which are sent in the command mode (ATN true).

Mnemonic	Command	ASCII Code
Universal:		
*DCL	Device Clear	DC4
LLO	Local Lockout	DC1
MLA	My Listen Address	(selectable)
MTA	My Talk Address	(selectable)
SPD	Serial Poll Disable	EM
SPE	Serial Poll Enable	CAN
UNL	Unlisten	?
UNT	Untalk	–
Addressed:		
GTL	Go to Local	SOH
*SDC	Selected Device Clear	EOT

*DCL and SDC commands set the 3325A to its initial turn-on conditions (see Paragraph 3-8) and cause an AMPTD CAL operation. Any data in the HP-IB input buffer is lost. The storage registers, SRQ masking, and the status byte are not affected.

3-109. Placing the 3325A in Remote.

3-110. The 3325A will go to Remote when ATN is true, REN is true, and it receives its listen address.

3-111. The 3325A Address.

3-112. The 3325A address is normally set at the factory to:

	ASCII Character	5-Bit Octal	(5-Bit Octal Equivalent) Decimal	Hexadecimal
Listen	1	21	17	11
Talk	Q	21	17	11

The 3325A can be made to display its address in decimal code by pressing the blue prefix key and the BUS ADRS (LOCAL) key.

NOTES

1. All programming is shown in ASCII code.

2. Table 3-9 is a summary of the 3325A program data messages and program times. Table 3-10 lists program codes in binary, octal, decimal, and hexadecimal. At the end of this section (III) there is also a summary of the HP-IB programming codes. This chart may be removed from the manual and/or copied to be used as a programming reference.

3. The following front panel key actions cannot be remotely programmed:

Modify group
Sweep bandwidth × 2
Sweep bandwidth ÷ 2
Set sweep center frequency to marker frequency
Display bus address
Clear display

4. The 3325A must be set to REMOTE and addressed to LISTEN before it will accept device dependent data messages.

3-113. 3325A Data Message Formats.

3-114. The following are valid programming strings (data messages) for the 3325A:

Mnemonic, Data, Delimiter, EOS
Mnemonic, Data, EOS
Mnemonic, EOS
I, Mnemonic, EOS

Where I is the ASCII character I and EOS is the end-of-string character, which is required for Data Transfer Mode 2 (see following paragraphs). Valid EOS characters are:

LF = Line Feed = 12 octal
* = Asterisk = 52 octal

Table 3-9. Summary of 3325A Programming (ASCII Characters).**

Parameter or Operation	Mnemonics ASCII Code	Data	ASCII Code Delimiters	Approximate Programming Time*
Data Transfer Mode Data Mode 1 Data Mode 2	=MD =MD	 1 2	NA	MD=4.5 ms
Function	=FU	0=DC Only 1=Sine 2=Square 3=Triangle 4=Positive Ramp 5=Negative Ramp	NA	FU=1500 ms
Frequency	=FR	≤ 11 Digits and Decimal	HZ=Hertz KH=Kilohertz MH=Megahertz	FR=7.0 ms Each digit or decimal=2.8 ms HZ, KH, or MH=12.5 ms
Amplitude	=AM	≤ 4 Digits and Decimal. Also − sign if negative dBm. + sign is valid but not required.	VO=Volts (p-p) MV=Millivolts (p-p) VR=Volts rms MR=Millivolts rms DB=dBm	AM=6.8 ms Each digit, decimal or decimal=2.8 ms VO or MV=90 ms VR or MR=130 ms DB=250 ms
DC Offset	=OF	≤ 4 Digits and Decimal. Also − sign if negative dc offset. + sign is valid but not required.	VO=Volts MV=Millivolts	OF=6.8 ms Each digit, decimal, or − sign=2.8 ms VO or MV=82 ms
Phase	=PH	≤ 4 Digits − minus sign	DE=Degrees	PH=5 ms; DE=28 ms Each digit and − sign=2.8 ms
Sweep Start Frequency Sweep Stop Frequency Sweep Marker Frequency	=ST =SP =MF	≤ 11 Digits and Decimal	HZ=Hertz KH=Kilohertz MH=Megahertz	ST, SP, or MF=7.0 ms Each digit or decimal=2.8 ms HZ, KH, or MH=10.3 ms
Sweep Time	=TI	≤ 4 Digits and Decimal	SE=Seconds	TI=5.5 ms; SE=7.0 ms Each digit and decimal=2.8 ms
Sweep Mode Linear Logarithmic	=SM	 1 2	NA	SM=4.5 ms
Rear or Front Panel Output Front Panel Rear Panel	=RF	 1 2	NA	RF=44.5 ms
Store Program Recall Program	=SR =RE	1 Digit, 0-9	NA	SR=11 ms; RE=1700 ms
Execution Functions Assign Zero Phase Perform Auto-Cal Start Single Sweep Start Continuous Sweep Perform Self-Test	 =AP =AC =SS =SC =TE	NA NA	NA NA	 AP=5.2 ms AC=1500 ms SS=300 ms SC=300 ms TE=10,000 ms
Interrogate Program Error	=IER	NA	NA	IER=11.5 ms
Interrogate Entry Parameters Frequency Amplitude Offset Phase Sweep Start Frequency Sweep Stop Frequency Sweep Marker Frequency Sweep Time	 =IFR =IAM =IOF =IPH =IST =ISP =IMF =ITI	NA	NA	 IFR=10 ms IAM=9.8 ms IOF=9.8 ms IPH=8 ms IST=10 ms ISP=10 ms IMF=10 ms ITI=8.5 ms
Interrogate Function	=IFU	NA	NA	IFU=1603 ms
Mask Service Requests	=MS	See Para. 3-144	NA	MS=4.5 ms
Binary (ON/OFF) Functions High Voltage Output Amplitude Modulation Phase Modulation	 =HV =MA =MP	 OFF=0 ON=1	NA	HV=48 ms MA=7.0 ms MP=7.0 ms

*Program times are in addition to the data transfer time of 225 to 250 μs per byte.
**See Note 2 following Paragraph 3-112.

Table 3-10. Programming Codes.

Instruction	ASCII Characters	Binary Code	Octal Code	Decimal Code	Hexadecimal Code
Entry					
Frequency	F	1000110	106	70	46
	R	1010010	122	82	52
Amplitude	A	1000001	101	65	41
	M	1001101	115	77	4D
Offset	O	1001111	117	79	4F
	F	1000110	106	70	46
Phase	P	1010000	120	80	50
	H	1001000	110	72	48
Sweep					
Start Frequency	S	1010011	123	83	53
	T	1010100	124	84	54
Stop Frequency	S	1010011	123	83	53
	P	1010000	120	80	50
Marker Frequency	M	1001101	115	77	4D
	F	1000110	106	70	46
Time	T	1010100	124	84	54
	I	1001001	111	73	49
Start Continuous	S	1010011	123	83	53
	C	1000011	103	67	43
Start Single (must be sent twice)	S	1010011	123	83	53
	S	1010011	123	83	53
Sweep Mode	S	1010011	123	83	53
	M	1001101	115	77	4D
Numerical Data					
0	0	0110000	060	48	30
1	1	0110001	061	49	31
2	2	0110010	062	50	32
3	3	0110011	063	51	33
4	4	0110100	064	52	34
5	5	0110101	065	53	35
6	6	0110110	066	54	36
7	7	0110111	067	55	37
8	8	0111000	070	56	38
9	9	0111001	071	57	39
.(decimal)	.	0101110	056	46	2E
- (minus)	–	0101101	055	45	2D
Data Suffix (Delimiter)					
Hertz	H	1001000	110	72	48
	Z	1011010	132	90	5A
Kilohertz	K	1001011	113	75	4B
	H	1001000	110	72	48
Megahertz	M	1001101	115	77	4D
	H	1001000	110	72	4A
Volts (p-p or dc)	V	1010110	126	86	56
	O	1001111	117	79	4F
Millivolts (p-p or dc)	M	1001101	115	77	4D
	V	1010110	126	86	56
Volts rms	V	1010110	126	86	56
	R	1010010	122	82	52
Millivolts rms	M	1001101	115	77	4D
	R	1010010	122	82	52
dBm	D	1000100	104	68	44
	B	1000010	102	66	42
Degrees	D	1000100	104	68	44
	E	1000101	105	69	45
Seconds	S	1010011	123	83	53
	E	1000101	105	69	45
Store	S	1010011	123	83	53
	R	1010010	122	82	52
Recall	R	1010010	122	82	52
	E	1000101	105	69	45

Table 3-10. Programming Codes (Cont'd).

Instruction	ASCII Characters	Binary Code	Octal Code	Decimal Code	Hexadecimal Code
High Voltage Output	H	1001000	110	72	48
	V	1010110	126	86	56
Modulation-Amplitude	M	1001101	115	77	4D
	A	1000001	101	65	41
Modulation-Phase	M	1001101	115	77	4D
	P	1010000	120	80	50
Rear or Front Output	R	1010010	122	82	52
	F	1000110	106	70	46
Data Transfer Mode	M	1001101	115	77	4D
	D	1000100	104	68	44
Assign Zero Phase Reference	A	1000001	101	65	41
	P	1010000	120	80	50
Perform Auto Cal.	A	1000001	101	65	41
	C	1000011	103	67	43
Perform Self Test	T	1010100	124	84	54
	E	1000101	105	69	45
Mask SRQ	M	1001101	115	77	4D
	S	1010011	123	83	53
Interrogate (Parameter)	I	1001001	111	73	49
Interrogate Error	I	1001001	111	73	49
	E	1000101	105	69	45
	R	1010010	122	82	52
EOS (End of String)					
Line Feed	LF	0001010	12	10	A
Asterisk	*	0101010	52	42	2A

All spaces (40 octal), carriage returns (15 octal), commas (54 octal), and all lower case alphabetics are ignored by the 3325A.

NOTE

A program string may program one parameter or all parameters. For example, the string "FU2FR10KHAM3V0" programs the following:

FU2 = Square wave function
FR10KH = 10 kHz
AM3V0 = 3 V p-p

The EOS character should follow the complete string, or a maximum of 48 characters (see Paragraphs 3-115 through 3-118).

3-115. Data Transfer Mode.

3-116. The 3325A accepts data from the HP-IB in either of two modes. If speed of communication is a critical factor on your HP-IB system, Mode 2 is preferrable. The characteristics of the two modes are:

Data Mode 1. The 3325A turns on in Data Mode 1. In this mode, each device dependent character (byte) is processed when received. Line feeds and Asterisks (EOS characters) are ignored. No other device dependent data communications are permitted on the bus until the entire 3325A program string has been accepted and all but the last character processed.

Data Mode 2. Device dependent characters are accepted and stored in an internal buffer and not processed until the EOS character is received or the buffer is filled (48 bytes). Consequently, other communications on the bus are permitted after the program string has been accepted (at the rate of approximately 150 to 200 microseconds per character). If the program string contains 48 characters or more, the 3325A will hold up the bus while it processes the 48 characters before accepting and storing the rest of the string. Because the instrument turns on in Data Mode 1, Mode 2 must be programmed remotely. It will then remain in Mode 2 until Mode 1 is programmed or until the POWER switch is set to STBY.

3-117. While the 3325A is processing data it will accept and respond to universal commands. For this reason, when operating in Mode 2, the controller can send a program string (48 characters or less) to the 3325A, and

while this data is being processed the controller can unaddress the 3325A to listen and then communicate with another device. However, if the string is more than 48 characters, the bus will be held up until the first 48 characters have been processed and the remaining characters accepted. In order for the bus to be used during 3325A processing time for communication between other devices, a program string greater than 48 characters should be divided and an EOS character sent after (or at a convenient place before) the 48th byte. The remaining program can then constitute a second string. While the 3325A is processing input information, a "Busy" flag is set in the status byte (see Paragraph 3-136). This flag can be used to determine when the 3325A has finished processing.

NOTE

The 3325A will handshake bus communications even though the POWER switch is set to STBY. This will not interfere with the operation of the bus unless it was set to STBY while addressed to talk. Before it is set to STBY, make sure it is not addressed to talk, or else disconnect the HP-IB cable from the 3325A. The addressed to talk condition can be cleared by an IFC command, even when the 3325A is in Standby.

3-118. Programming Data Transfer Mode.

3-119. Instructions for programming Data Transfer Mode are included in Paragraph 3-126.

3-120. Programming Entry Parameters.

3-121. The 3325A entry parameters are:

Frequency
Amplitude
Offset
Phase
Sweep Start Frequency
Sweep Stop Frequency
Sweep Marker Frequency
Sweep Time

The programming syntax for these parameters is:

Mnemonic, Data, Delimiter, EOS

NOTE

All program codes are shown in ASCII characters.

Valid mnemonics:

FR = Frequency
AM = Amplitude
OF = Offset
PH = Phase
ST = Sweep Start Frequency
SP = Sweep Stop Frequency
MF = Sweep Marker Frequency
TI = Sweep Time

Valid data:

0 thru 9 = ASCII numerics (if too many digits are sent, the extra digits will be ignored or rounded)

\+ = ASCII plus sign (plus sign is accepted but not required)

– = ASCII minus sign (minus sign will be ignored if sent for parameters that cannot be negative)

. = ASCII decimal (floating decimal entries not valid)

Valid delimiters:

HZ = Hertz
KH = Kilohertz
MH = Megahertz
VO = Volts (peak-to-peak or dc)
MV = Millivolts (peak-to-peak or dc)
VR = Volts rms
MR = Millivolts rms
DB = dBm
DE = Degrees
SE = Seconds

NOTE

When operating in Data Mode 1, an EOS character is not required. When in Mode 2, the EOS character should not be sent until the end of the program string (or after 48 bytes; see Paragraph 3-117).

3-122. Programming Waveform Function.

3-123. The selectable functions are:

DC only
Sine wave
Square wave
Triangle wave
Positive Slope Ramp
Negative Slope Ramp

The programming syntax for selecting function is:

Mnemonic, Data, EOS

Valid mnemonic:

FU = Function

Valid data:

Ø = Function off (dc only)
1 = Sine
2 = Square
3 = Triangle
4 = Positive Slope Ramp
5 = Negative Slope Ramp

3-124. Programming Binary (On or Off) Functions.

3-125. The programmable binary functions are:

High Voltage Output (Option 002)
Amplitude Modulation
Phase Modulation

The programming syntax for binary functions is:

Mnemonic, Data, EOS

Valid mnemonics:

HV = High Voltage Output (If the 3325A receives the HV mnemonic but does not have the high voltage option, SRQ (if enabled) and an error code will be generated. See Paragraph 3-134.)
MA = Modulation – Amplitude
MP = Modulation – Phase

Valid data:

Ø = Off
1 = On

NOTE

The rear panel signal output is inactive (no internal signal connection) if the instrument has the High Voltage Output Option 002 installed. Instructions are given in the Operating and Service Manual, Section VIII, Service Group M, for activating the rear panel signal output in one of two ways: 1) Placing the standard/high voltage output on the rear panel only, disconnecting the front panel signal output, or 2) Disabling the high voltage output and enabling the standard front/rear output configuration.

3-126. Programming Selection Functions.

NOTE

The selection functions are similar to binary functions, but instead of ON or OFF states, selection is made between two mutually exclusive operations.

3-127. The programmable selection functions are:

Rear Output/Front Output
Linear Sweep/Logarithmic Sweep
Data Transfer Mode

The programming syntax for the selection functions is:

Mnemonic, Data, EOS

Valid mnemonics:

RF = Rear or Front Output
SM = Sweep Mode
MD = Data Transfer Mode

Valid data for RF is:

1 = Select Rear Output

2 = Select Front Output (If the 3325A receives the RF mnemonic but does not have rear output capability (Option 002, for example) SRQ (if enabled) and an error code will be generated. See Paragraph 3-134.)

Valid data for SM is:

1 = Linear Sweep (The 3325A turns on in Linear Sweep function. This function need not be programmed except to change from Linear to Log Sweep or to return to Linear.)

2 = Logarithmic Sweep

Valid data for MD is:

1 = Data Mode 1 (The 3325A turns on in Data Mode 1. This function need not be programmed if it is desired to remain in Data Mode 1.)
2 = Data Mode 2

3-128. Programming Execution Functions.

3-129. The programmable execution functions are:

Assign Zero Phase Reference
Perform Amplitude Calibration
Start Single Sweep
Start Continuous Sweep
Perform Self Test

The programming syntax for execution functions is:

Mnemonic, EOS

Valid mnemonics:

AP = Assign Zero Phase Reference
AC = Perform Amplitude Calibration
SS = Start Single Sweep

SC = Start Continuous Sweep
TE = Perform Self Test

NOTES

1. The Start Single mnemonic must be sent twice (SSSS). The first SS sets the output (and display) to the start frequency, and the second SS starts the sweep.

2. While the 3325A is in Continuous Sweep mode, if it receives the mnemonics SC, SS, FR, PH, AC, AP, or TE, it will stop sweeping. It must receive SC again in order to resume continuous sweeping; or if a single sweep is to be programmed, SSSS is required.

3. The "Busy" flag (bit 7 in the status byte, see Paragraph 3-138) will be "1" for the duration of a Self Test operation. After Self Test, the 3325A returns to the previously programmed conditions, except that if a sweep was in progress the sweep will remain stopped.

3-130. Programming Amplitude Units Conversion.

3-131. The programming syntax for converting amplitude units (Vp-p, Vrms, dBm) is:

Mnemonic, Delimiter, EOS

Mnemonic = AM = Amplitude

Delimiter = The units to which you want to convert:

VO = Vp-p
MV = mVp-p
VR = Vrms
MR = mVrms
DB = dBm

Example: If amplitude was programmed in Vp-p, it may be converted to dBm by programming "AMDB". If amplitude was the last parameter programmed and is shown in the display, only the delimiter "DB" needs to be programmed.

3-132. Programming Storage Registers.

3-133. The data that will be stored includes the current program of Entry Parameters, Function (Waveform), Binary Functions, and Selection Functions. The storage register functions are:

Store Data in Register N
Recall Data from Register N

The programming syntax for storage register functions is:

Mnemonic, Data, EOS

Valid mnemonics:

SR = Store
RE = Recall

Valid data:

Ø thru 9 = ASCII numerics specifying register number

NOTES

1. If no data has been stored in a register, the recall command for that register will be ignored.

2. An amplitude calibration is performed when a register is recalled.

3. The numeric value for the phase is stored, but the phase of the output is not changed when the register is recalled. (Phase may need to be reprogrammed.)

4. DCL (Device Clear) and SDC (Selected Device Clear) commands do not affect the storage registers.

3-134. Service Requests.

3-135. The 3325A will set the SRQ line true for any of the following reasons, if enabled by the SRQ mask (see Paragraph 3-144):

Program String Error
Sweep Started or Sweep Stopped
System Failure (Possible component problem)
  Failed Self Test
  Failed Amplitude Calibration
  External Reference Unlocked
  Main Oscillator Unlocked

3-136. Serial Poll.

3-137. When the system controller determines that the SRQ line is true, it may conduct either a Serial Poll or a Parallel Poll to determine which device(s) initiated the Service Request, and the reason(s) for the request. The 3325A responds to a Serial Poll, which is conducted in the following manner:

Controller places ATN true (command mode)
Controller sends Serial Poll Enable (SPE) on lines DIO1-8 (ASCII CAN, binary code ×0011000)

Controller sends 3325A Talk address, controller Listen address
Controller places ATN false (data mode)
3325A responds by sending status byte on DIO1-8
Controller places ATN true (after each device has been polled)
Controller sends Serial Poll Disable (SPD) on DIO1-8 (ASCII EM, binary code ×0011001)

Serial Poll Disable clears the SRQ message originated by the 3325A, resetting bits Ø through 3 and bit 6 in the status byte.

NOTE

Some of the above Serial Poll operations are performed automatically by some controllers in response to certain programming statements. Refer to the programming instructions for your particular controller.

3-138. Status Byte.

3-139. A status byte consists of one 8-bit byte on the HP-IB data lines. A "1" in bit 6 indicates that the 3325A did request service (placed SRQ true), and a "Ø" in bit 6 indicates that it did not request service. The 3325A status byte contains the following information:

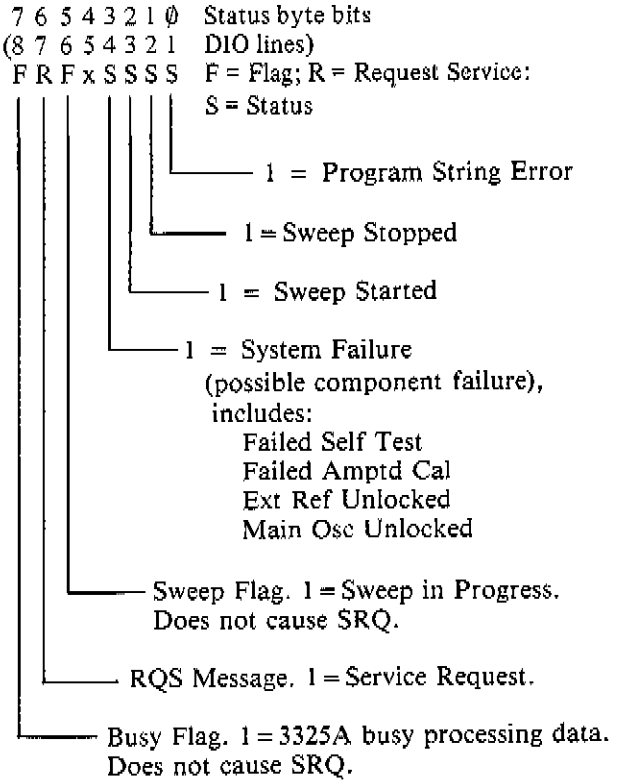

3-140. Busy Flag.

3-141. The Busy Flag (status byte bit 7) is high (1) while the 3325A is processing data. This bit can be monitored by the controller to determine when the 3325A is ready for more data.

3-142. Sweep Flag.

3-143. The Sweep Flag (bit 5 of the status byte) is high (1) while the 3325A is in the process of sweeping. This bit can be monitored by the controller to determine when the end of a sweep occurs.

3-144. Masking or Enabling Service Requests.

3-145. Bits 3 through Ø in the status byte can be masked so that the corresponding conditions will not cause a service request. However, a "1" will still appear in the status byte if the condition exists, and can be cleared only by a serial poll. At instrument turn-on all SRQ conditions are masked. The programming syntax for masking and enabling SRQ conditions is:

Mnemonic, Data, EOS

Mnemonic = MS

Valid Data is shown in Table 3-11.

3-146. Interrogating Program Errors.

3-147. The "Program Error" service request may result from the following Errors:

ASCII Numeric	Error
1	Entry parameter out of bounds (for example, Freq ≥ 61 MHz)
2	Invalid delimiter
3	Frequency too large for function (for example, Function = Triangle, Freq ≥ 11 kHz)
4	Sweep time too small or too large
5	Offset incompatible with amplitude, or amplitude incompatible with offset
6	Sweep frequency too large for function; Sweep bandwidth too small; Start frequency too small (log sweep); Start frequency greater than stop frequency (log sweep)
7	Unrecognizable mnemonic received
8	Unrecognizable data character received
9	Option does not exist (High Voltage or Rear/Front)

Table 3-11. SRQ Mask/Enable Data.

ASCII Character	Bits 3 thru 0	System Fail Bit 3	Sweep Start Bit 2	Sweep Stop Bit 1	Program Error Bit 0
@	*0000	Mask	Mask	Mask	Mask
A	0001	Mask	Mask	Mask	Enable
B	0010	Mask	Mask	Enable	Mask
C	0011	Mask	Mask	Enable	Enable
D	0100	Mask	Enable	Mask	Mask
E	0101	Mask	Enable	Mask	Enable
F	0110	Mask	Enable	Enable	Mask
G	0111	Mask	Enable	Enable	Enable
H	1000	Enable	Mask	Mask	Mask
I	1001	Enable	Mask	Mask	Enable
J	1010	Enable	Mask	Enable	Mask
K	1011	Enable	Mask	Enable	Enable
L	1100	Enable	Enable	Mask	Mask
M	1101	Enable	Enable	Mask	Enable
N	1110	Enable	Enable	Enable	Mask
O	1111	Enable	Enable	Enable	Enable

*Initial turn-on conditions

The programming syntax for interrogating error is:

Mnemonic, EOS

Mnemonic = IER

After receiving IER, the 3325A will send back the following the next time it is addressed to talk:

Mnemonic, Data, CR (ASCII carriage return), LF & EOI (ASCII line feed with EOI sent simultaneously)

Mnemonic = ER

Data = The ASCII numeric corresponding to the first error that occurred (see list above).

If no error occurred, the code returned is Ø. When more than one error has occurred, only the code for the first error will be returned. After interrogation, the error code is set to zero until the next error occurs.

3-148. Interrogating Entry Parameters.

3-149. Each entry parameter can be interrogated by the controller to determine its value. The programming syntax for interrogating entry parameters is:

I, Mnemonic, EOI

I = the ASCII character I and indicates interrogation desired.

Valid mnemonics (parameter to be interrogated):

FR = Frequency
AM = Amplitude
OF = Offset
PH = Phase
ST = Sweep Start Frequency
SP = Sweep Stop Frequency
MF = Sweep Marker Frequency
TI = Sweep Time

After receiving a parameter interrogation, the 3325A will send back the following the next time it is addressed to talk:

Mnemonic, Data, Delimiter, CR (ASCII Carriage Return), LF & EOI (ASCII Line Feed with EOI sent simultaneously)

Mnemonic = The mnemonic of the parameter being interrogated

Data = 11 digits of ASCII numerics equal to the value of the specified parameter plus decimal point. If the value is negative, the first digit is a minus sign.

Delimiter = The data suffix mnemonic denoting the parameter value (see Paragraph 3-120)

NOTE

Only one parameter can be interrogated by each interrogation message.

3-150. Interrogating Function (Waveform).

3-151. The 3325A may be interrogated by the controller to determine the current function programmed. The programming syntax for interrogating function is:

I, Mnemonic, EOS

I = The ASCII character I and indicates interrogation desired

Mnemonic = FU = Function

After receiving IFU, the 3325A will send back the following the next time it is addressed to talk:

Mnemonic, Data, CR (ASCII Carriage Return), LF & EOI (ASCII Line Feed with EOI sent simultaneously)

Mnemonic = FU

Data = One ASCII numeric indicating function as follows:

Ø = DC Only (Offset)
1 = Sine
2 = Square
3 = Triangle
4 = Positive Slope Ramp
5 = Negative Slope Ramp

3-152. Interrogating Miscellaneous Parameters.

3-153. The other parameters shown below can be interrogated by the controller to determine their present state. The programming syntax is:

I, Mnemonic, EOS

I = The ASCII character I and indicates interrogation desired

Valid Mnemonics (parameter to be interrogated):

SM = Sweep Mode
RF = Rear or Front Output*
HV = High Voltage Output*
MA = Amplitude Modulation
MP = Phase Modulation

*Rear/Front output and High Voltage Output (Option 002) are mutually exclusive. If either RF or HV is interrogated, the mnemonic and data returned will indicate the actual capability of the instrument and its state. For example, if the High Voltage option is present and OFF, HVØ will be returned in response to either IRF or IHV.

After receiving an interrogation, the 3325A will send back the following the next time it is addressed to talk:

Mnemonic, Data, CR (ASCII Carriage Return), LF & EOI (ASCII Line Feed with EOI sent simultaneously)

Mnemonic = The mnemonic of the parameter being interrogated

Data = 1 ASCII digit specifying the state of the parameter. This is the same digit that would be used to program the parameter to that state.

3-154. Using the Interrogate Capability.

3-155. When the 3325A is changed from local to remote operation or vice versa, it retains its currently programmed state until this program is changed by the operator or controller. This feature can be useful in setting up a program string for HP-IB programming. For example, using the 3325A in local, the operator can determine experimentally the parameters required to perform the operation or test desired. Then the 3325A can be placed in remote and its function and entry parameters interrogated. Each item can be stored by the controller and then combined to form the 3325A program string to be incorporated into the total HP-IB program.

3-156. 3325A Programming Procedure.

3-157. The following examples are given to illustrate the basic procedure for developing a program. Program examples are shown in Appendix B-3, using the -hp-Model 9825A Calculator as the system controller. Appendix A-3 diagrams the required messages.

Example 1:
Address controller to talk, 3325A to listen

Send Program Data

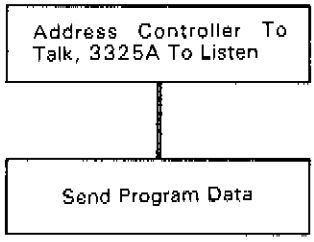

Example 2:
Address controller to talk, 3325A to listen

Send Program Data

Check for Require Service message

If yes, determine reason from 3325A Status Byte

Take corrective action if necessary

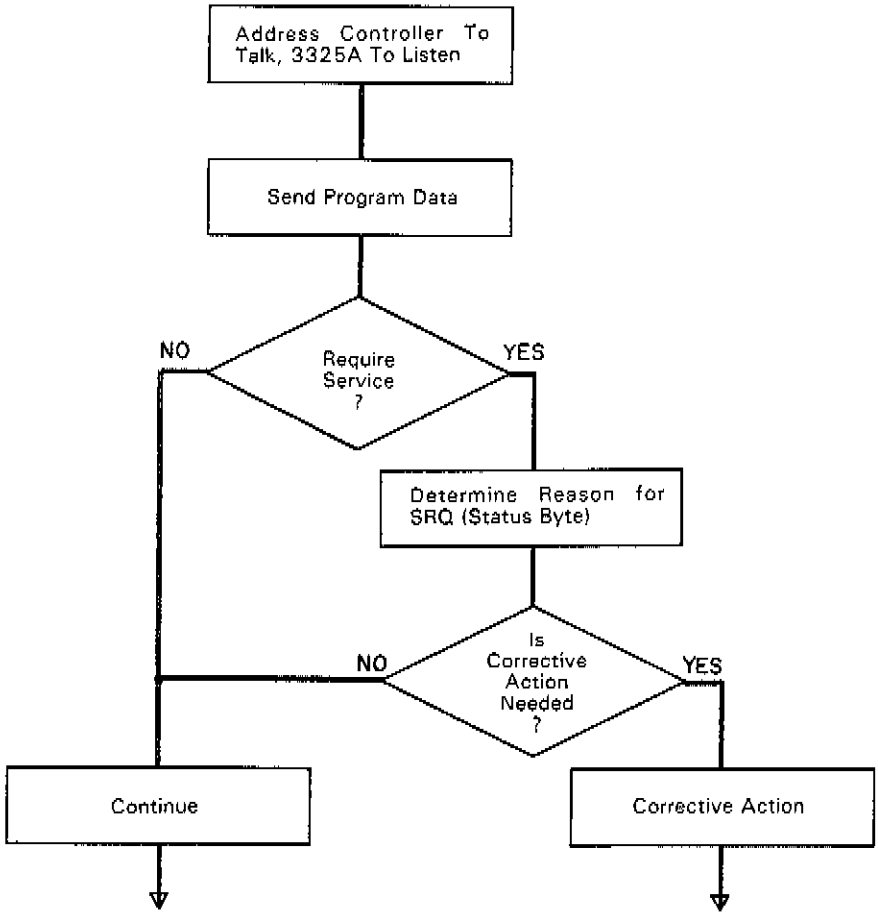

APPENDIX A
SECTION III
META MESSAGES
BLOCK DIAGRAMMED

DATA MESSAGE — The Data message is the actual information that is sent from a talker to one or more listeners. This action requires the controller to first enter the command mode to set up the talker and listener(s) for the transfer of data. The information is then transferred in the data mode.

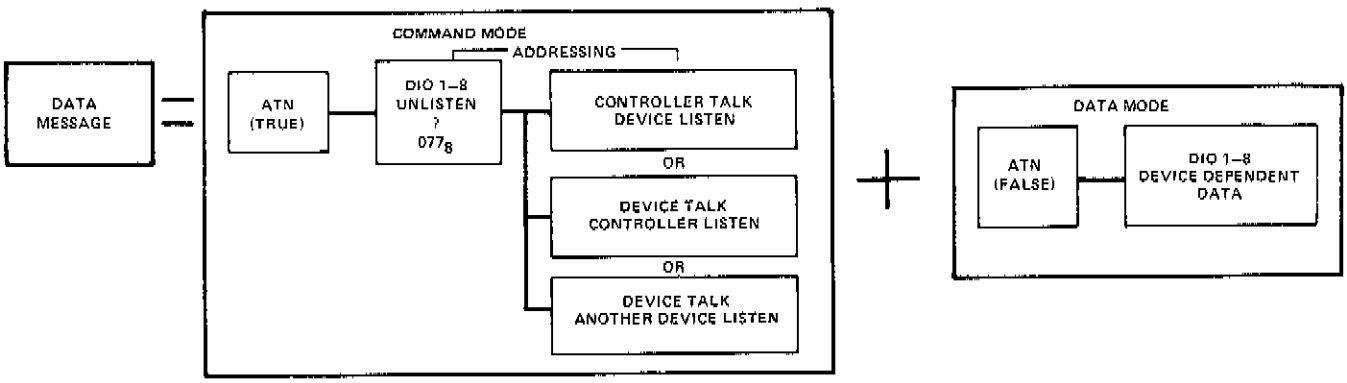

TRIGGER — The Trigger message causes all addressed instruments with this capability to execute some predefined function simultaneously.

The 3325A does not have Trigger capability.

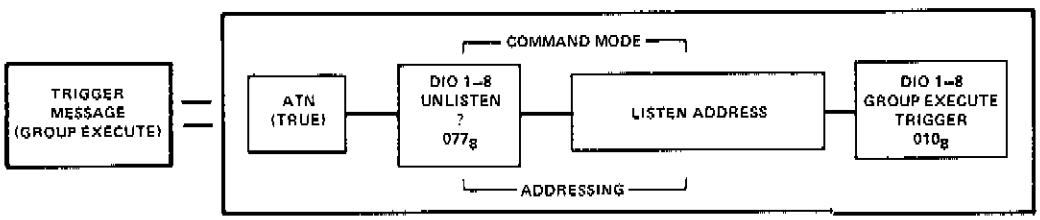

REN MUST BE TRUE BEFORE EXECUTING THE TRIGGER MESSAGE.

CLEAR — The Clear message may be implemented for addressed devices or for all devices on the bus capable of responding. In both cases the controller places the bus in the command mode to execute the message.

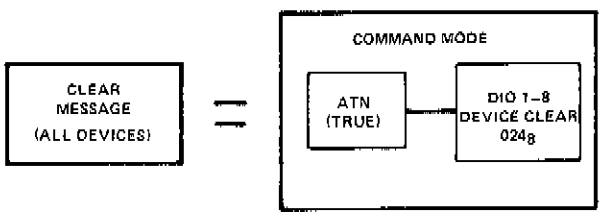

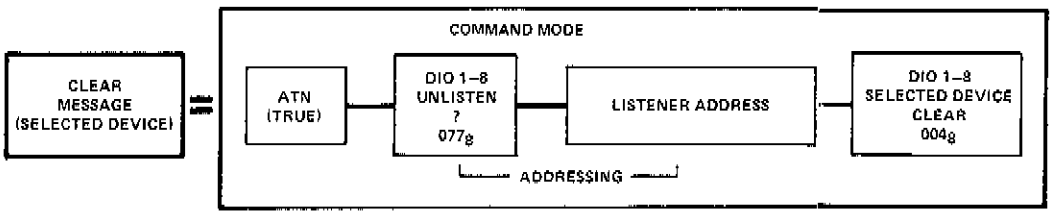

REMOTE — Only the system controller can place the device into the Remote operating condition. To implement the Remote message, the controller must set the REN line true. The HP-IB is then in the Remote Enable mode. The controller then sends the listen addresses of those devices that are to be placed in the Remote operating condition. Some instruments have been designed to enter the Remote mode as soon as REN is true.

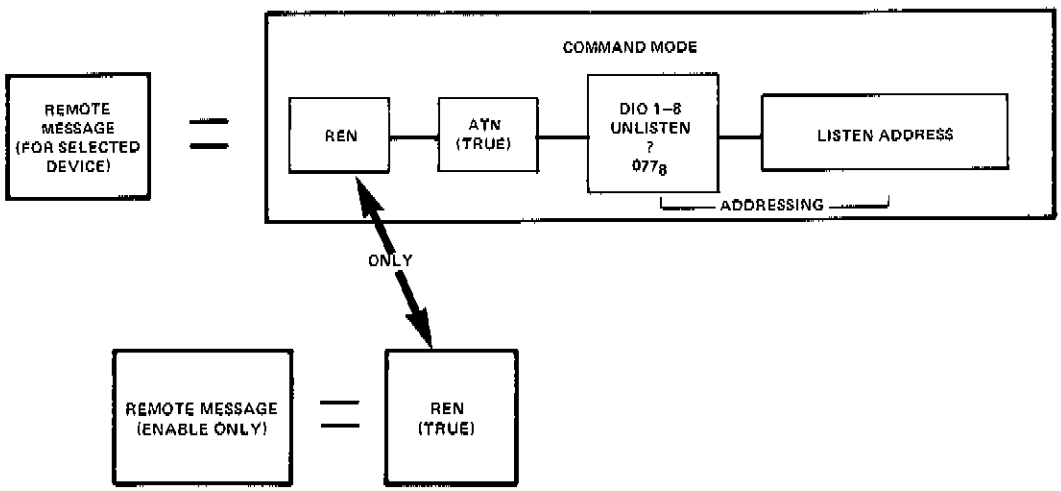

LOCAL — The Local message will remove addressed devices from the Remote operating mode to local (front panel) control. The controller must place the HP-IB into the command mode and address to listen all devices that are to be returned to local. The Local message does not remove the HP-IB from the Remote mode, only the listening devices.

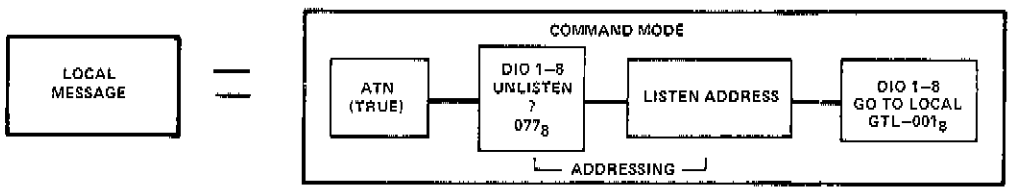

LOCAL LOCKOUT — The Local Lockout message prevents the operator from placing the instrument into local control from the front panel. The controller must be in the command mode to send the Local Lockout message.

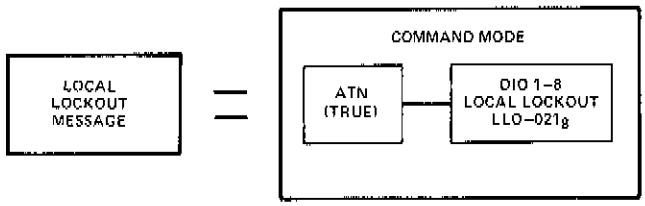

REN MUST BE TRUE BEFORE EXECUTING THE LOCAL LOCKOUT MESSAGE.

CLEAR LOCKOUT AND SET LOCAL — This message removes all devices from the Local Lockout mode and causes them to revert to local control. Because the REN line is set false, the HP-IB is in the local mode.

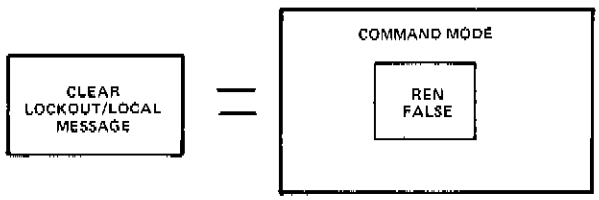

REQUIRE SERVICE — The Require Service message is implemented by a device setting the SRQ line true. The Require Service message and, therefore, the SRQ line is held true until a poll is conducted by the controller to determine the cause of the request for service, or until the device no longer needs service.

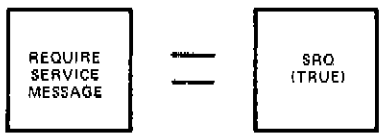

*REFER TO THE STATUS BYTE MESSAGE FOR THE SPECIFICATIONS REQUIRED TO FORCE SRQ FALSE.

STATUS BYTE — The Status Byte message represents the operational status of a single instrument during a Serial Poll. A controller usually Serial Polls devices in response to a Require Service message. The controller requests device status from one device at a time. The status information byte (8 bits) sent by the device will tell whether that device needed service and why. A device will stop requesting service upon being Serial Polled, or if it no longer needs service. The controller initiates the message by placing the bus into the command mode, sending the Serial Poll Enable command, and addressing the specific devices to be polled, one at a time. The device then sends its Status Byte and clears the SRQ line provided the cause for the require Service message is no longer present. The controller then places the bus in the command mode to terminate the message with a Serial Poll Disable command.

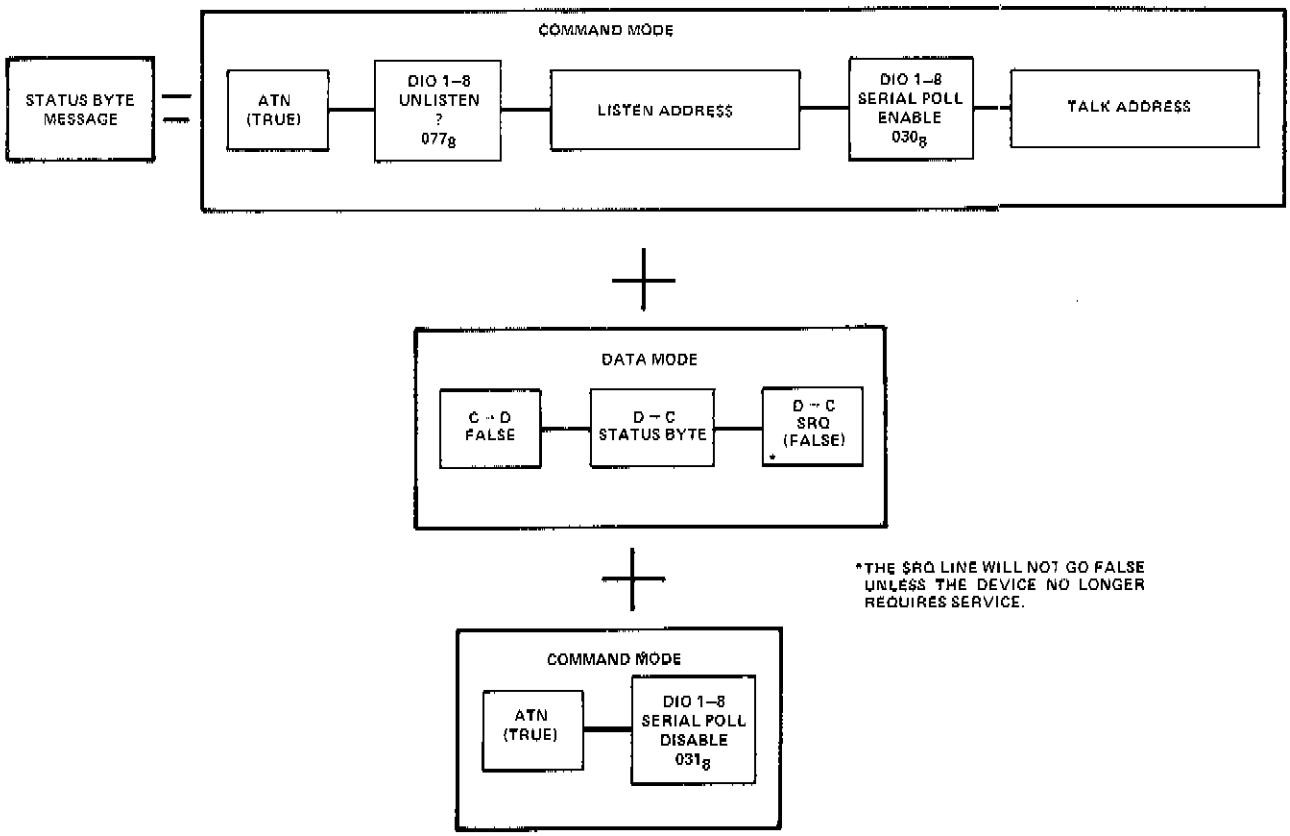

STATUS BIT — The Status Bit message is sent by a device to the controller to indicate its operational status in response to a Parallel Poll. Parallel Polling consists of the controller requesting one bit of status from each device simultaneously. The Parallel Poll may consist of three types of operations: Configuring, Polling, and Unconfiguring. In Configuring, the controller assigns each device a logic level and bit (on the bus data lines) for a poll response. During polling, each device responds on its assigned data line with the appropriate logic level. In Unconfiguring, the controller negates the bit and level assignments for all or selected devices. Several devices may be assigned to the same bit and level, causing their response bits to be logically ORed or ANDed.

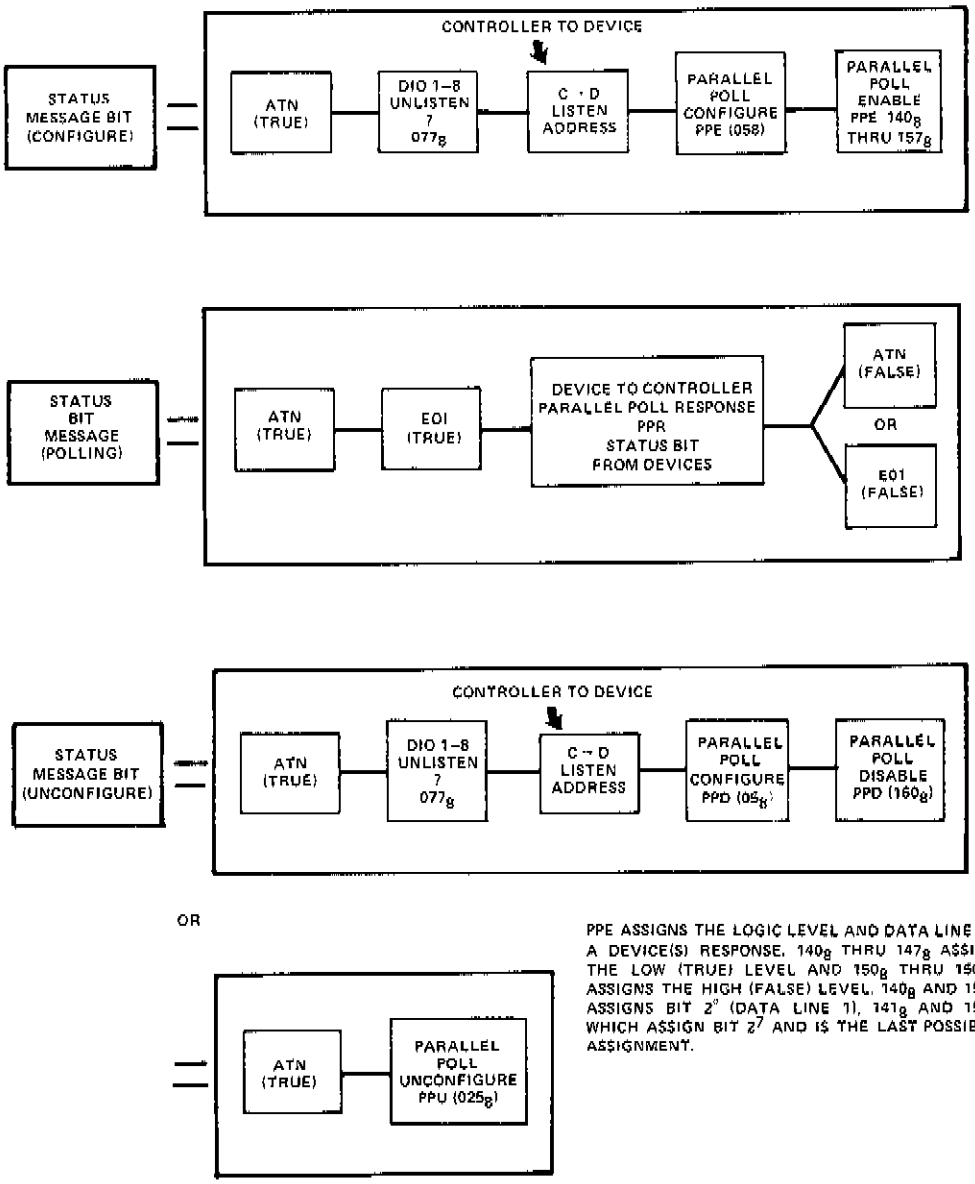

PPE ASSIGNS THE LOGIC LEVEL AND DATA LINE OF A DEVICE(S) RESPONSE. 140_8 THRU 147_8 ASSIGN THE LOW (TRUE) LEVEL AND 150_8 THRU 1507_8 ASSIGNS THE HIGH (FALSE) LEVEL. 140_8 AND 150_8 ASSIGNS BIT 2^0 (DATA LINE 1), 141_8 AND 157_8 WHICH ASSIGN BIT 2^7 AND IS THE LAST POSSIBLE ASSIGNMENT.

The 3325A does not respond to Parallel Poll.

PASS CONTROL — The Pass Control message transfers bus management responsibilities from the active controller to another controller. In order to pass control, the active controller must enter the command mode, send the talk address, and the HP-IB characters for talk control.

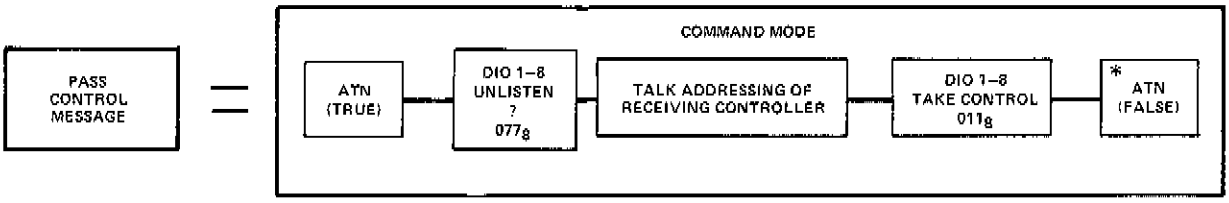

*THE RECEIVING CONTROLLER TAKES CONTROL AT THIS TIME.

The 3325A does not respond to the Pass Control message.

ABORT —The system Controller implements the Abort Message to regain control of the HP-IB from the active controller.

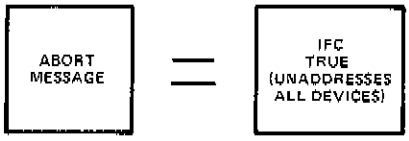

APPENDIX B
SECTION III
PROGRAMMING THE MODEL 3325A with the MODEL 9825A CALCULATOR

The following basic examples are provided to assis the operator in developing programs for the Model 3325A in an HP-IB system which uses the -hp- Model 9825A Calculator as the system controller. The calculator must be equipped with a General I/O ROM and an HP-IB Interface set to select code 7. The calculator (controller) normally holds the REN line true, unless the "lcl 7" (local) command is sent. REN may be returned to the true state by the "rem 7" (remote) command.

Example 1: This is a basic program statement which accomplishes the following:

Address the controller to talk
Address the 3325A to listen
Sent Program Data:
  Function: Sine
  Frequency: 5 kHz
  Amplitude: 3 Vp-p
  Offset: +1.5 V

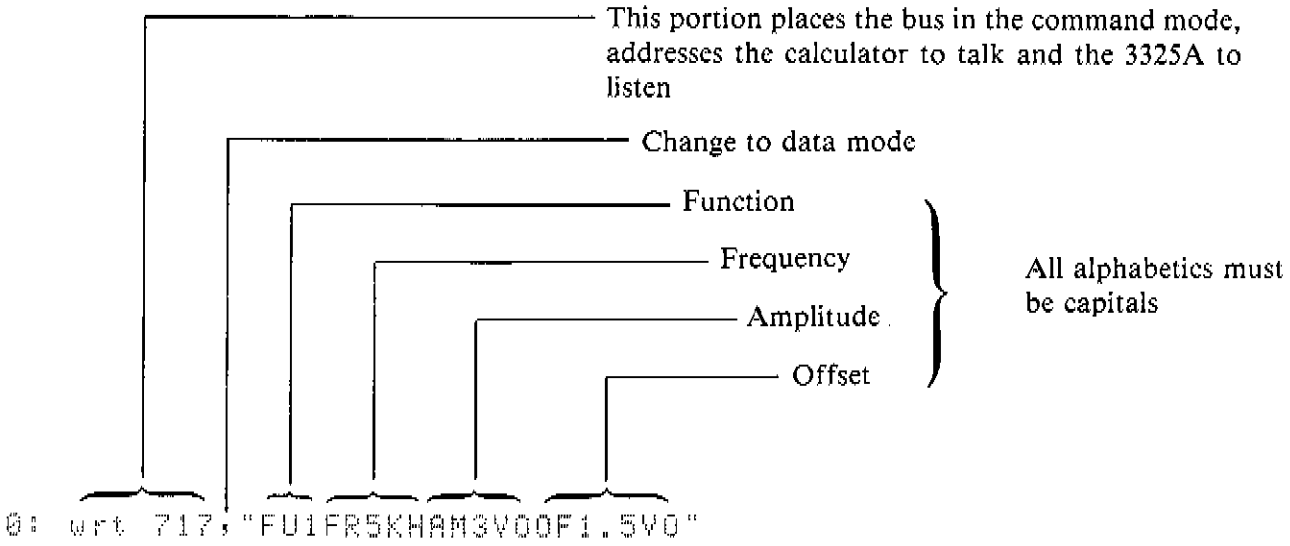

The last parameter programmed can be changed without sending the parameter mnemonic. For example, following the program string above, the offset (OF) may be changed to 1 V by sending "1VO".

Example: 2: This program sets up sweep parameters and initiates a single sweep.

Address the controller to talk
Address the 3325A to listen
Send Program Data:
  Function: Sine
  Amplitude: 3 Vrms
  Start Frequency: 1 kHz
  Stop Frequency: 10 kHz
  Marker Frequency: 5 kHz
  Sweep Time: 2 seconds
  Start Single Sweep

NOTE

To start a single sweep the mnemonic "SS" must be sent twice. The first "SS" sets the 3325A to the Start frequency, and the second "SS" starts the sweep.

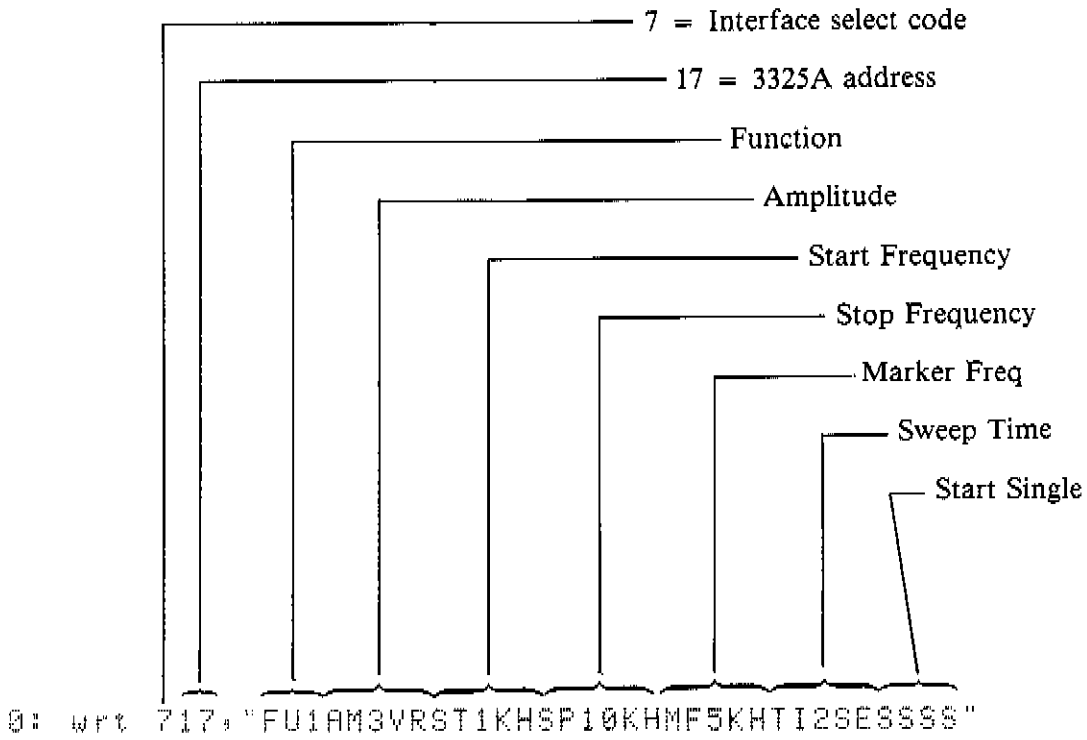

Example 3: This example checks the "Require Service" status of the 3325A and if it did request service, determines the reason.

```
0: wrt 717,"MSOF
 U3AM3VOSTiKMSP1
 5KHMF5KHTI5SESC
 "
1: wait 1000
2: rds(717)→S
3: if bit(6,S)=1
 ;prt "Request
 Service";asb 5
4: dsp "PROCEED
 WITH PROGRAM";
 stp
5: if bit(0,S)=1
 ;prt "Program
 Error";wrt 717,
 "IER";red 717,E
6: if E=1;prt
 "Parameter out
 of Bounds"
7: if E=2;prt
 "Invalid Delimi
 ter"
8: if E=3;prt
 "Freq too large
  for Function"
9: if E=4;prt
 "Sweep Time
 Invalid"
10: if E=5;prt
 "Offset & Amptd
  Incompatible"
11: if E=6;prt
 "Sweep Paramete
 r Error"
12: if E=7;prt
 "Unrecognizable
  Mnemonic"
13: if E=8;prt
 "Unrecognizable
  Data Char"
14: if E=9;prt
 "Option Does
 Not Exist"
```

1. Enables all service request conditions.

2. Program data contains an error. Stop frequency (SP15KH) is too large for triangle function (FU3).

3. Wait statement allows time for sweep to start before reading status.

4. Read status byte from the 3325A and place in the calculator variable "S".
5 If bit 6 of the status byte = 1, the 3325A did request service. Go to subroutine to determine the reason.

6. Programming continues at this point if the 3325A did not request service or upon returning from the subroutine.

7. If service request resulted from a program string error, interrogate the 3325A to determine the error code and place in the calculator variable "E".

8. Determine the nature of the program error.

```
15: if bit(1,
 S)=1;prt "Sweep
  Stopped"
16: if bit(2,
 S)=1;prt "Sweep
  Started"
17: if bit(3,
 S)=1;prt "Syste
 m Failure"
18: if bit(5,
 S)=1;prt "Sweep
 ing"
19: if bit(7,
 S)=1;prt "Busy"
20: ret
```

(9) (10)

9. Determine other reason for service request and if "Sweeping" or "Busy" flags were true.

10. Return from subroutine.

11. Printer records the results of the serial poll.

12. If the program string were corrected to make all data valid, this printout would result from the above program.

```
Request Service
Program Error
Sweep Parameter
Error
```

(11)

```
Request Service
Sweep Started
Sweeping
```

(12)

Example 4: The 3325A can be set up manually to the optimum parameters needed for the test to be performed, then the calculator can interrogate the 3325A to determine and record these parameters. This example program interrogates:

Function: IFU
Frequency: IFR
Amplitude: IAM
DC Offset: IOF

```
0: wrt 717,"IFU'
 ;red 717,W;fxd
 6
1: prt "Function
 =",W
```

Line Ø Write statement interrogates Function; read statement addresses 3325A to talk, calculator to listen, and places data in variable W; "fxd 6" fixes six decimal places.

Line 1 Because only numerical data can be placed in the variables, print statements may include in quotes the parameter interrogated.

```
2: wrt 717,"IFR"
 ;red 717,F
3: prt "Frequenc
 y =",F,"Hz"
4: wrt 717,"IAM"
 ;red 717,A
5: prt "Amplitud
 e =",A
6: wrt 717,"IOF"
 ;red 717,O
7: prt "Offset
 =",O,"V"
```

Lines 2 – 7 Other parameters are interrogated. Amplitude data acquired by this program does not indicate the units programmed. Frequency is always returned in Hz and DC Offset in Volts.

```
Function =
          1.000000
Frequency =
       1000.000000
Hz
Amplitude =
         22.310000
Offset =
          0.001000
V
```

This printout results from the above program.

If the calculator is equipped with a String Variable ROM, the interrogate program may be changed to the following. Because string variables accept both alpha and numeric characters, the resulting printout includes the mnemonics and delimiters (units).

```
0: dim W$[50],
 F$[50],A$[50],
 O$[50]
1: wrt 717,"IFU"
 ;red 717,W$;
 prt W$
2: wrt 717,"IFR"
 ;red 717,F$;
 prt F$
3: wrt 717,"IAM"
 ;red 717,A$;
 prt A$
4: wrt 717,"IOF"
 ;red 717,O$;
 prt O$
```

1. Dimension a string variable for each parameter you want to interrogate. The dimension number (in brackets) is the number of spaces assigned to the variable.

```
FU1
FR00001000.000HZ
AM00000022.310DB
OF00000.001000VO
```

2. This printout results when string variables are used.

Example 5: The 3325A can be made to sweep amplitude (in steps) if a for/next statement is used in the calculator program. It is recommended that the upper and lower amplitude limits selected be on the same range because irregularities in the sweep will occur if the attenuator relays are switched.

```
0: wrt 717,"FU1F
 R1KHOFØVOAM3VO"
1: for I=3 to
 10 by .1;wrt
 717,I,"VO"
2: next I
3: for I=10 to
 3 by -.1;wrt
 717,I,"VO"
4: next I
5: gto 1
```

Line Ø DC Offset (OFØVO) is programmed to zero because any offset would be incompatible with the 10 V maximum amplitude of this sweep.

Line 1 The sweep limits (3 to 10) are on the same range. The sweep increment is in .1 V steps. Because amplitude was the last parameter programmed, the write statement does not require the "AM" mnemonic.

Line 2 The calculator returns to Line 1 until I = 10, then proceeds to Line 3.

Line 3 The sweep decrement is also in .1 V steps.

Line 5 Return to Line 1 to continue sweeping.

The sweep speed is determined by calculator and 3325A data transfer and processing times. If a slower sweep time is desired, wait statements may be added before the "next I" statements.

MODEL 3325A
SYNTHESIZER/FUNCTION GENERATOR
HP-IB PROGRAMMING CODE
(ASCII Characters)

FUnction

DC only	Ø
Sine	1
Square	2
Triangle	3
Positive Ramp	4
Negative Ramp	5

FRequency

Hz	HZ
kHz	KH
MHz	MH

AMplitude

Volts p-p	VO
mVp-p	MV
Vrms	VR
mVrms	MR
dBm	DB

DC OFfset

Volts	VO
mV	MV

PHase

Degrees	DE

Sweep STart Frequency

Sweep StoP Frequency

Sweep Marker Frequency

Sweep TIme

Seconds	SE

Sweep Mode

Linear	1
Logarithmic	2

StoRe Program

Ø – 9

REcall Program

Ø – 9

Rear or Front Panel Output

Front	1
Rear	2

Execution Functions

Assign Zero Phase
Perform Amptd Cal
Start Single
Start Continuous
Perform Self TEst

High Voltage Output

On	1
Off	Ø

Amplitude Modulation – MA

On	1
Off	Ø

Phase Modulation – MP

On	1
Off	Ø

Data

Ø	Ø
1	1
2	2
3	3
4	4
5	5
6	6
7	7
8	8
9	9
–	–
.(Decimal)	.

Interrogate Operations

Function	IFU
Frequency	IFR
Amplitude	IAM
Offset	IOF
Phase	IPH
Swp Start Freq	IST
Swp Stop Freq	ISP
Swp Mkr Freq	IMF
Sweep Time	ITI
Sweep Mode	ISM
Rear/Front Out	IRF
High Volt Out	IHV
Error	IER
Program Mode	IMD
Amptd Mode	IMA
Phase Mode	IMP

Error Codes (See Paragraph 3-146)

1. Entry parameter out of bounds
2. Invalid delimiter
3. Frequency too large for function
4. Sweep time too small or too large
5. Offset and amplitude incompatible
6. Sweep frequency or bandwidth error
7. Unrecognizable mnemonic
8. Unrecognizable data character
9. Option does not exist

*Start Single code must be sent twice "SSSS". The first "SS" resets the sweep to start conditions and the second "SS" starts the sweep.

HP-IB IMPLEMENTATION WORKSHEET

DEVICE IDENTIFICATION													
ADDRESS	LISTEN												
	TALK												
	DECIMAL												
MESSAGE					DEVICE IMPLEMENTATION*								
DATA													
TRIGGER													
CLEAR													
LOCAL													
REMOTE													
LOCAL LOCKOUT													
CLEAR LOCKOUT AND SET LOCAL													
REQUIRE SERVICE													
STATUS BYTE													
STATUS BIT													
PASS CONTROL													
ABORT													

*S=SEND ONLY R=RECEIVE ONLY SR=SEND AND RECEIVE N=NOT IMPLEMENTED

SECTION IV
PERFORMANCE TESTS

4-1. INTRODUCTION.

4-2. This section contains tests which are in-cabinet procedures to determine whether the instrument is operating properly. In the Operating and Service Manual two sets of procedures are provided:

a. Operational Verification procedures which are recommended for incoming inspection and general after-repair tests.

b. Performance Tests which compare the instrument operation to the specifications listed in Table 1-1.

The Operating Supplement contains only the Operational Verification Procedures.

4-3. CALCULATOR-CONTROLLED TEST.

4-4. The only calculator-controlled test in these procedures tests the HP-IB interface circuits for proper operation. All input and output lines are tested. The program used for this test is written specifically for the -hp- Model 9825A Calculator but may be adapted to other controllers. The calculator prints the test results. This test is recommended for both the Operational Verification Checks and the Performance Tests.

4-5. OPERATIONAL VERIFICATION.

4-6. The following procedures are recommended for incoming inspection and for testing the instrument after repair. Additional tests to be performed following repair of certain circuits are indicated in Section VIII. An Operational Verification Record is located at the end of this section. For ease of recording the test data at various times, copies of the blank Operational Verification Record may be made without written permission from Hewlett-Packard.

4-7. Operational Verification includes the following procedures:

Par. No.	Test
4-10	Self Test
4-12	Sine Wave Verification
4-14	Square Wave Verification
4-16	Triangle and Ramp Verification
4-18	Amplitude Flatness Check
4-20	Sync Output Check
4-22	Frequency Accuracy
4-24	Output Level and Attenuator Check
4-26	Harmonic Distortion Test
4-28	Close-in Spurious Signal Test
4-30	HP-IB Interface Test

4-8. Required Test Equipment.

4-9. A list of test equipment required for the Operational Verification procedures is given in Table 4-1. Any equipment that satisfies the critical specifications given in the table may be substituted for the recommended model.

4-10. Self Test.

4-11. This test uses the control, ROM, and control clock circuits to verify operation of these and other circuits. The following front panel indications result from this test.

LED check: Turns on all LED's for about two seconds

The following messages are displayed for about one second:

OSC FAIL - displayed only if the VCO is not controlled (displayed continuously after test)

PASS or FAIL 1 - tests AMPTD CAL of sine wave

PASS or FAIL 2 - tests AMPTD CAL of square wave

PASS or FAIL 3 - tests AMPTD CAL of triangle

Press the blue entry prefix key, then press SELF TEST (AMPTD CAL) key. All LED's should light, and the display should not indicate any failures.

4-12. Sine Wave Verification.

4-13. This procedure visually checks the sine wave output for the correct frequency and any visible irregularities.

Equipment Required: Oscilloscope (-hp- Model 1740A)

a. Connect the 3325A signal output to the oscilloscope vertical input. If the oscilloscope is an -hp- Model 1740A, set the input switch to the 50-ohm position. If your oscilloscope does not have a 50-ohm input, use a 50-ohm load (-hp- Model 11048C 50-ohm Feedthru Termination) at the input.

b. Set the 3325A as follows:

High Voltage Output (Option 002).....Off
Function ..... Sine
Frequency..... 20 MHz
Amplitude..... 10 V p-p

Table 4-1. Test Equipment Required for Operational Verification.

Instrument	Critical Specifications	Recommended Model
Oscilloscope	Vertical: Bandwidth: dc to 100 MHz Deflection: 1 V to 5 V/div Horizontal: Sweep: .05μs to 1 s/div External Sweep Input	-hp- 1740A
Electronic Counter	Frequency measurement to 20 MHz Accuracy: ±2 counts Resolution: 8 digits	-hp- 5328A with Opt. 040 or 041
DC Digital Voltmeter	Ranges: 0.1 V to 100 V Resolution: 6 digits Accuracy: ±0.1%	-hp- 3455A
50-ohm load	Accuracy: ±0.2% Power Rating: 1 W	-hp- 11048C
High Frequency Spectrum Analyzer	Frequency Range: 1 MHz to 80 MHz Amplitude Accuracy: ±0.5 dB Noise: >70 dB below reference	-hp- 141T/8552B/8553B/ 8566A/8568A
Low frequency Spectrum Analyzer	Frequency Range: 100 Hz to 50 kHz Amplitude Range: 2 m V to 20 V Noise: >80 dB below input reference or −140 dBv	-hp- 3580A/3585A
Resistor	56.2Ω 1/8W 1.0%	-hp- 0757-0395
Adapter	BNC female-to-dual banana plug	-hp- 1250-2277
Calculator	HP-IB Control Capability	-hp- 9825A with 98034A Interface, General I/O ROM, Extended I/O ROM
Resistor	470Ω 2W 5%	-hp- 0698-3634

c. Set the oscilloscope vertical control to 2 V/div, horizontal to .05 μs/div.

d. The oscilloscope should display one cycle per division, approximately five divisions peak-to-peak.

e. Change 3325A frequency to 1 MHz.

f. Change oscilloscope horizontal control to .1 μs/div.

g. The oscilloscope should display one sine wave having no visible irregularities.

High Voltage Output (Option 002)

h. Set the oscilloscope vertical control to 5 V/div.

i. Set the oscilloscope input switch to 1 MΩ dc coupled position (or disconnect external 50-ohm load).

j. Press 3325A High Voltage Output key (lower right corner of front panel).

k. Change 3325A amplitude to 40 V p-p. The oscilloscope should display one sine wave approximately eight divisions peak-to-peak having no visible irregularities.

l. Press the High Voltage Output key again to turn the option off.

4-14. Square Wave Verification.

4-15. This procedure checks the square wave output for frequency, rise time, and abberrations.

Equipment Required: Oscilloscope (-hp- Model 1740A)

a. Connect the 3325A signal output to the oscilloscope vertical input. If the oscilloscope is an -hp- Model 1740A, set the input switch to the 50-ohm position. If your oscilloscope does not have a 50-ohm input, use a 50-ohm load (-hp- Model 11048C 50-ohm Feedthru Termination) at the input.

b. Set the 3325A as follows:

High Voltage Output (Option 002) .....Off
Function .....Square
Frequency .....1 MHz
Amplitude .....10 V p-p

c. Set the oscilloscope vertical control to 2 V/div, horizontal to .2 μs/div. The oscilloscope should display two square waves, approximately five divisions peak-to-peak.

d. Switch the oscilloscope vertical control to 1 V/div. so that the abberrations (overshoot and ringing) can be measured. Aberration excursion should be less than 500 mV (½ div.).

e. Repeat Step d at 2 kHz and .1 ms/div.

f. Adjust the oscilloscope vertical and horizontal controls so that the square wave rise time between the 10% and 90% points can be measured. Rise time should be less than 20 nanoseconds.

4-16. Triangle and Ramp Verification.

4-17. This procedure checks the triangle and ramp output signals for frequency, shape, and ramp retrace time.

Equipment Required: Oscilloscope (-hp- Model 1740A)

a. Connect the 3325A signal output to the oscilloscope vertical input. If the oscilloscope is an -hp- Model 1740A, set the input switch to the 50-ohm position. If your oscilloscope does not have a 50-ohm input, use a 50-ohm load (-hp- Model 11048C 50-ohm Feedthru Termination) at the input.

b. Set the 3325A as follows:

High Voltage Output (Option 002) .....Off
Function .....Triangle
Frequency .....10 kHz
Amplitude .....10 V p-p

c. Set the oscilloscope vertical control to 2 V/div, horizontal to .1 ms/div. The oscilloscope should display one triangle wave per division, approximately five divisions peak-to-peak.

d. Change the 3325A function to positive slope ramp. The display should be one ramp per division, approximately five divisions peak-to-peak.

e. Change 3325A function to negative slope ramp. The display should be one ramp per division, approximately five divisions peak-to-peak.

f. Change the oscilloscope horizontal and vertical controls so that the ramp retrace time from the 90% to 10% points can be measured. Retrace time should be less than 3 μs.

g. Change 3325A function to positive slope ramp and repeat Step f.

h. Change 3325A function to triangle.

i. Set oscilloscope vertical control to 2 V/div, horizontal to 10 μs/div. The oscilloscope should display one triangle wave with no visible irregularities in either slope.

4-18. Amplitude Flatness Check.

4-19. This procedure provides a visual check of the sine wave amplitude flatness.

Equipment Required: Oscilloscope (-hp- Model 1740A)

a. Connect the 3325A signal output to the oscilloscope vertical input. If the oscilloscope is an -hp- Model 1740A, set the input switch to the 50-ohm position. If your oscilloscope does not have a 50-ohm input, use a 50-ohm load (-hp- Model 11048C 50-ohm Feedthru Termination) at the input.

b. Set the 3325A as follows:

High Voltage Output (Option 002) .....Off
Function .....Sine
Frequency .....2 kHz
Amplitude .....10 V p-p
Sweep Start Freq .....Ø Hz
Sweep Stop Freq .....20 MHz
Sweep Marker Freq .....5 MHz
Sweep Time .....01 sec

c. Connect the 3325A X-Drive output to the oscilloscope's channel B input. Connect the 3325A signal output to the oscilloscope's channel A input.

* d. Set the oscilloscope as follows:

Display .....A vs B
Channel A Sensitivity 1V/div
(uncal - adjust for full vertical deflection)
Channel B Sensitivity 0.5V/div
(uncal - adjust for full horizontal sweep)

* Settings may vary from one oscilloscope to another. Note that whichever scope is used, it should be operated in a "X-Y" mode, with the 3325A X-Drive output driving the horizontal (X) sweep and the signal output driving the scope's vertical (Y) channel.

e. Press the 3325A START CONT key.

f. The oscilloscope display should show a sweep that is essentially flat, dropping no more than 3.5%. Any D.C. variations should be ignored, taking the peak-to-peak reading for flatness comparison.

4-20. Sync Output Check.

4-21. This test verifies the sync output signal levels.

Equipment Required: Oscilloscope (-hp- Model 1740A)

a. Connect the 3325A sync output to the oscilloscope vertical input. If the oscilloscope is an -hp- Model 1740A, set the input switch to the 50-ohm position. If your oscilloscope does not have a 50-ohm input, use a 50-ohm load (-hp- Model 11048C 50-ohm Feedthru Termination) at the input.

b. Set the 3325A function to sine, frequency to 20 MHz.

c. Adjust the oscilloscope controls to measure the high and low voltage levels of the sine square wave. The high level should be greater than +1.2 V and the low level should be less than +0.2 V.

4-22. Frequency Accuracy.

4-23. This test compares the accuracy of the 3325A output signal to the specification in Table 1-1: $\pm 5 \times 10^{-6}$ of selected frequency.

Equipment Required: Electronic Counter (-hp- Model 5328A, calibrated within three months or with an accurate 10 MHz external reference input)

a. Connect the 3325A signal output to the electronic counter channel A input with a 50 Ω load. Allow 3325A and counter to warm up for 20 minutes.

b. Set the 3325A output as follows:

Function ..... Sine
Frequency ..... 20 MHz
Amplitude ..... 0.99 V P-P
DC Offset ..... 0 V

c. Set the counter to count the frequency of the A input with 0.1Hz resolution, and adjust for stable triggering. Electronic counter should indicate 20 000 000.0Hz ±100Hz.

d. Change 3325A function to square wave. Frequency automatically changes to 10 MHz. Electronic counter should indicate 10 000 000.0 Hz ±50 Hz.

e. Change 3325A function to triangle. Frequency automatically changes to 10kHz. Move the counter input to the sync output of the 3325A. Set the counter to average 1000 periods. Electronic counter should indicate 100 000.00ns ±0.5ns.

f. Change 3325A function to positive slope ramp. Electronic counter should indicate 100,000 ns ± .5 ns.

4-24. Output Level and Attenuator Check.

4-25. This procedure checks the output level and the attenuator by using the "dc only" function.

Equipment Required:
DC Digital Voltmeter (-hp- Model 3455A)
50-ohm Feedthru Termination (-hp- Model 11048C)

a. Connect the 3325A signal output through a 50-ohm feedthru termination to a dc digital voltmeter input.

b. If the instrument has High Voltage Output Option 002, make sure the High Voltage Output is Off (High Voltage indicator light in the center of the "SIGNAL" key in the lower right corner of the front panel if Off).

c. Press whichever function key is presently active, indicated by a lighted indicator in the center of the key. This removes the ac output. The indicator in the center of the DC OFFSET key should light.

d. Set the 3325A dc offset to -5 V, then press the AMPTD CAL key.

e. The dc digital voltmeter reading should be -4.980V to -5.020V.

f. Change 3325A dc offset to (+)5 V. Digital voltmeter reading should be +4.980 V to +5.020 V.

g. Change 3325A dc offset to the following voltages. The voltmeter readings should be within the tolerances shown.

DC Offset	Tolerances
±1.499 V	±1.49300 to 1.50499 V
±499.9 mV	±0.49790 to 0.50190 V
±149.9 mV	±0.14930 to 0.15050 V
±49.99 mV	±0.04979 to 0.05019 V
±14.99 mV	±0.01493 to 0.01505 V
±4.999 mV	±0.004979 to 0.005019 V
±1.499 mV	±0.001479 to 0.001519 V

High Voltage Output Option 002 DC Offset

h. Remove the 50-ohm feedthru termination and connect the 3325A output directly to the digital voltmeter input.

i. Press the "SIGNAL" key in the lower right corner of the 3325A front panel to select High Voltage Output (Option 002). Lighted indicator in the center of this key indicates High Voltage Output is on.

j. Set 3325A dc offset to 20 V. Digital voltmeter reading should be +19.775 V to +20.225 V.

k. Set 3325A dc offset to −20 V. Digital voltmeter reading should be −19.775 V to −20.225 V.

4-26. Harmonic Distortion Test.

4-27. This procedure tests the harmonic distortion of the 3325A sine wave output against the following specifications from Table 1-1.

Harmonic Distortion (relative to fundamental)

Fundamental Frequency	No Harmonic Greater Than
0.1 Hz to 50 kHz	−65 dB
50 kHz to 200 kHz	−60 dB
200 kHz to 2 MHz	−40 dB
2 MHz to 15 MHz	−30 dB
15 MHz to 20 MHz	−25 dB

Equipment Required:

High Frequency Spectrum Analyzer (-hp- Model 141T/ 8552B/8553B/8566A/8568A)
Low Frequency Spectrum Analyzer (-hp- Model 3580A/ 3585A)
50-ohm Feedthru Termination (-hp- Model 11048C)
Resistor 470Ω 2W 5% (-hp- 0698-3634)
Resistor 56.2Ω 1/8W 1% (-hp- 0757-0395)

a. Set the 3325A output as follows:

High Voltage Output (Option 002) .....Off
Function .....Sine
Frequency .....20 MHz
Amplitude 999mVp-p

b. Connect the 3325A signal output to the high frequency spectrum analyzer's 50 ohm input.

c. Set the spectrum analyzer controls to display the fundamental and at least four harmonics. Verify that all harmonics are 25dB below the fundamental.

d. Set the 3325A to the following frequencies and verify that all harmonics are below the specified levels, relative to the fundamental.

15 MHz	−30 dB
2 MHz	−40 dB
200 kHz	−60 dB

e. Disconnect the 3325A from the high frequency spectrum analyzer and connect it to the low frequency spectrum analyzer's 50 ohm input.

f. Set the 3325A frequency to 50kHz and the amplitude to 9.99mVp-p.

g. Set the spectrum analyzer controls to display the fundamental and at least three harmonics. (It may be necessary to decrease the analyzer's video bandwidth to separate the harmonics from the noise floor.) Verify that all harmonics are at least 65dB below the fundamental.

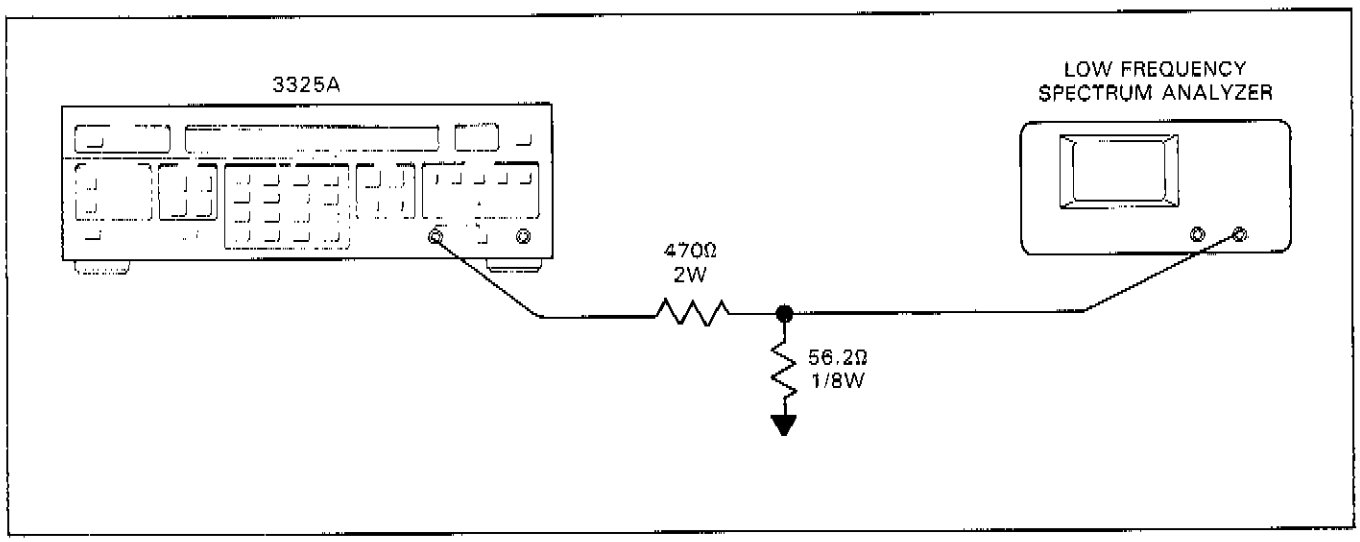

Figure 4-1. Harmonic Distortion Verification (High Voltage Output).

h. Set the 3325A to the following frequencies and verify that all harmonics are 65dB below the fundamental.

10kHz

1kHz

100Hz

High Voltage Output (Option 2)

i. Connect the 3325A signal output to the low frequency spectrum analyzer's 50Ω input. (See Figure 4-1.)

j. Press the "high voltage output" key on the 3325A. Set the amplitude to 40Vp-p and the frequency to 100Hz.

k. Set the spectrum analyzer controls to display the fundamental and at least three harmonics. Verify that all harmonics are 65dB below the fundamental.

l. Set the 3325A to the following frequencies and verify that their harmonics are below the specified levels, relative to the fundamental.

10kHz	-65dB
200kHz	-60dB
1MHz	-40dB

m. Press the high voltage output key to deactivate the high voltage output.

4-28. Close-In Spurious Signal Test.

4-29. This procedure tests the sine wave output for spurious signals which may be generated by the 3325A frequency synthesis circuits. The spurious signals must be more than 70 dB lower than the fundamental signal.

Equipment Required: Spectrum Analyzer (-hp-3585A/8566A/8568A)

a. Set the 3325A as follows:

High Voltage Output (Option 002) .....Off
Function .....Sine
Frequency 20.001MHz
Amplitude .....-2.99dBm
DC Offset .....0 V

b. Connect the 3325A signal output to the spectrum analyzer's 50 ohm input.

c. Set the spectrum analyzer controls for a center frequency of 20.001MHz, a resolution bandwidth of 30Hz, a 100Hz/div frequency span, with the fundamental referenced to the top of the display graticule.

d. Set the spectrum analyzer center frequency to 20.002, 20.003, and 20.004MHz, verifying in each case that all spurious signals are more than 70dB below the fundamental.

4-30. HP-IB Interface Test.

4-31. The following calculator program tests the operation of the 3325A HP-IB interface circuits. The program is written for an -hp- Model 9825A calculator but may be adapted for other controllers.

Equipment Required:
-hp- Model 9825A Calculator equipped with:
98034A HP-IB Interface (set to select code 7)
Any combination of ROM's that includes a General I/O ROM and an Extended I/O ROM

a. Connect the calculator interface cable to the 3325A rear panel HP-IB connector. It is recommended that no other equipment be connected to this HP-IB during this test.

b. Enter the program into the calculator.

c. Press RUN. Tests 4 through 7 in this program require the operator to press CONTINUE if the test passes, or 1 CONTINUE if the test fails. If the Test 4 question (SRQ LIGHT ON?, 1 = NO) does not appear in the calculator display within 30 seconds after start of the program (RUN), the 3325A and calculator are not interfacing properly. The calculator may display an error indication that will identify the problem. If not, the 3325A HP-IB circuits are probably not operating correctly.

Instrument Returns To Known Conditions After Self Test

Test 1 – Did Frequency Go To 1000 Hz?

Test 2 – Interrogate Frequency

Test 3 – Interrogate Amplitude

Test 4 – Test SRQ Circuits

Test 5 – Test Talk Circuits

Test 6 – Test Listen Circuits

Test 7 – Test Remote Circuits

PROGRAM FLOWCHART

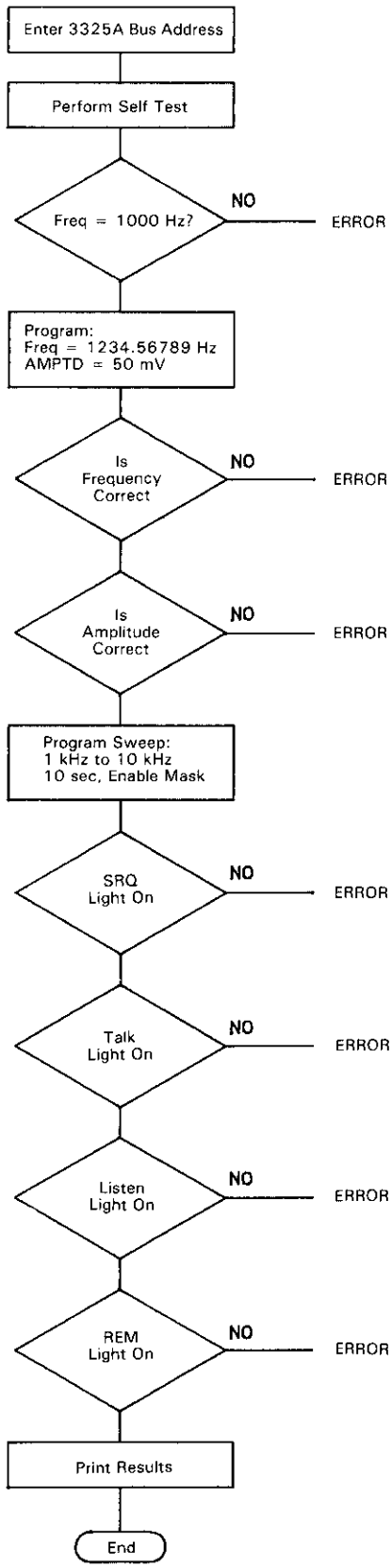

```
0:  fmt 1csv;0→r1→r2→r3→r4→r5→r6→r7
1:  prt "*****************"
2:  prt "3325A"
3:  prt "HP-IB TEST"
4:  prt "*************"
5:  beep;ent "3325A BUS ADDRESS?,cont=717",A
6:  if flg13;717→A
7:  clr A
8:  rem 7
9:
10:  "TEST 1":
11:  wrt A,"TE"
12:  wrt A,"IFR"
13:  red A,F
14:  if F#1000;1→r1
15:
16:  "TEST 2,3 SETUP":
17:  wrt A,"FR1234.567890HZ AM50MV"
18:  wrt A,"SR3"
19:  clr A
20:  wrt A,"RE3"
21:
22:  "TEST 2":
23:  wrt A,"IFR"
24:  red A,G
25:  if G#1234.56789;1→r2
26:
27:  "TEST3":
28:  wrt A,"IAM"
29:  red A,H
30:  if H#.05;1→r3
31:
```

Clear the 3325A to Turn-on State
Set HP-IB Remote Enable (Select Code 7)
Perform Self Test
Interrogate Frequency
Read 3325A Frequency
Compare Frequency to 1000 Hz
Set Freq to 1234.567890 Hz, Amptd to 50mV
Store Settings in Register 3
Clear the 3325A
Recall Settings in Register 3
Interrogate Frequency
Read Frequency
Compare to Frequency Stored
Interrogate Amplitude
Read Amplitude
Compare to Amplitude Stored

```
32:  "TEST 4":
33:  wrt A,"ST1KH SP10KH SM1 TI10SE MSF SSSS"
34:  cli 7;lcl 7
35:  beep;ent "SRQ LIGHT ON?,1=NO",r4
36:
37:  "TEST 5":
38:  rds(A)→S
39:  rem 7
40:  red A,$
41:  beep;ent "TALK LIGHT ON?,1=NO",r5
42:
43:  "TEST6":
44:  wrt A;lcl 7
45:  beep;ent "LISTEN LIGHT ON?,1=NO",r6
46:
47:  "TEST 7":
48:  rem 7;wrt A;cli 7
49:  beep;ent "REMOTE LIGHT ON?,1=NO",r7
50:
51:  spc 3;prt "**************"
52:  prt "TEST RESULTS:"
53:  spc 3;1→I;fxd 0
54:  if rI=0;prt "TEST",I,"      PASS"
55:  if rI=1;prt "TEST",I,"           FAIL"
56:  if (I+1→I)<=7;jmp -2
57:  prt "****************";spc 3
58:  ent "Repeat test?,1=Yes",C;if C=1;sto 0
59:  end
*24386
```

Lin Sweep 1—10kHz, Enable SRQ Mask

Clear Interface, Interface to Local

Did 3325A Initiate SRQ?

Read Status into Variable 5

Set Remote Enable

Read from the 3325A

Did 3325A respond to Talk Command?

Write to the 3325A, Interface to Local

Did 3325A respond to Listen Command?

Remote Interface, Write to 3325A, Clear Interface

Did the 3325A Respond to Remote?

Print Results of Tests

Self Contained Program may be Linked or Used as a Subroutine

Variables used in this Test Program:

A	Address of 3325A (defaults to 717)
F	Frequency read from 3325A in test #1
G	Frequency read from 3325A in test #2
H	Amplitude read from 3325A in test #3
I	Counter used to print test results
r1-r7	Test results (0 = Pass, 1 = Fail)
S	Status read from 3325A in test #5

Samples of Program Printouts:

```
****************
3325A
HP-IB TEST
**************

**************
TEST RESULTS:

TEST              1
     PASS
TEST              2
     PASS
TEST              3
     PASS
TEST              4
          FAIL
TEST              5
     PASS
TEST              6
     PASS
TEST              7
     PASS
****************
```

```
****************
3325A
HP-IB TEST
**************

**************
TEST RESULTS:

TEST              1
     PASS
TEST              2
     PASS
TEST              3
     PASS
TEST              4
     PASS
TEST              5
     PASS
TEST              6
     PASS
TEST              7
     PASS
****************
```

4-32. PERFORMANCE TESTS.

4-33. The following procedures compare the instrument operation to its specifications, listed in Table 1-1. A Performance Test Record is located at the end of this section. This Test Record lists all of the tested specifications and the acceptable limits. For ease of recording data at various times, copies of the blank Performance Test Record may be made without written permission from Hewlett-Packard.

4-34. The Performance Tests include the following:

Par No.	Test
4-37	Harmonic Distortion
4-39	Spurious Signal Tests
4-41	Integrated Phase Noise
4-43	Amplitude Modulation Envelope Distortion
4-45	Square Wave Rise Time and Aberrations
4-47	Ramp Retrace Time
4-49	Sync Output
4-51	Square Wave Symmetry
4-53	Frequency Accuracy
4-55	Phase Increment Accuracy
4-57	Phase Modulation Linearity
4-59	Amplitude Accuracy
4-61	DC Offset Accuracy (DC Only)
4-63	DC Offset Accuracy with AC Functions
4-65	Triangle Linearity
4-67	X Drive Linearity
4-69	Ramp Period Variation
4-71	HP-IB Interface Test

Table 4-2. Test Equipment Required For Performance Tests.

Instrument	Critical Specifications	Recommended Model
High Frequency Spectrum Analyzer	Frequency Range: 1 kHz to 80 MHz Amplitude Accuracy: ±0.5 dB Noise: > 70 dB below reference	-hp- 141T/8552B/8553B/8566A/8568A
50-ohm Load	Accuracy: ±0.2% Power Rating: 1 W	-hp- Model 11048C
Resistor	56.2Ω 1/8W 1.0%	-hp- 0757-0395
Low Frequency Spectrum Analyzer	Frequency Range: 20Hz to 50kHz Amplitude Accuracy: ± 0.5dB Spurious Responses: 80dB below reference	-hp-3580A/3585A
Sine Wave Signal Source	Frequency Range: 1 MHz to 21 MHz Amplitude Range: to + 13.01 dBm Output Impedance: 50Ω Phase Noise (Integrated): 9.9 MHz: < −63 dB 20 MHz: < −70 dB Spurious: > 75 dB below fundamental	-hp- 3335A
Double Balanced Mixer	Impedance: 50 Ω Frequency Range: 1 MHz-20 MHz	-hp- 10534A
AC/DC Digital Voltmeter	AC function (True RMS) Ranges: 1 V to 100 V Accuracy: ±0.2% Resolution: 6 digits Crest Factor: 4:1 DC Function Ranges: 0.1 V to 100 V Accuracy: ±0.05% Resolution: 6 digits	-hp- 3455A
1 MHz Low Pass Filter	Cut-off Frequency: 1 MHz Stopband Atten: 50 dB by 4 MHz Stopband Freq: 4 MHz-80 MHz	F882 1MHz LPF Allen Avionics, Inc. 224 E Second St. Mineola, NY 11501
15 kHz Filter	Consisting of: Resistor: 10 kΩ 1% Capacitor: 1600 pF 5%	-hp- 0757-0340 -hp- 0160-2223
Resistor	470Ω 2W 5%	-hp- 0698-3634
AC Voltmeter	Ranges: 0.1 V to 1 V Frequency Range: 2] Hz-1 MHz Input Impedance: ≥ 1 MΩ Meter: Log scale Acc (100 Hz to 10 kHz): ± 1%	-hp- 400FL
Sine Wave Signal Source	Frequency: 10 kHz Amplitude: 1 V rms into 20 kΩ Distortion: −60 dB	-hp- 204C

Table 4-2. Test Equipment Required For Performance Tests (Cont'd).

Instrument	Critical Specifications	Recommended Model
Oscilloscope	Vertical: Bandwidth: dc to 100 MHz Deflection: 1 V to 5 V/div Horizontal: Sweep: 0.05 μs to 1 s/div x 10 magnification	-hp- 1740A
Electronic Counter	Frequency measurement Frequency Range: to 20 MHz Resolution: 8 digits Accuracy: ± 2 counts Time Interval Average A to B Resolution: 0.01 ns	-hp- 5328A With Option 040 or 041
DC Power Supply	Volts: 0 to ±5 V Amps: 10 mA Floating Output	-hp- 6214A
Thermal Converter	Input Impedance: 50 Ω Input Voltage: 1 V rms Frequency: 2 kHz to 20 MHz Frequency Response: ±0.05 dB 2 kHz to 20 MHz	-hp- 11050A
Resistive Divider	Consisting of: 2 Resistors: 61.11 Ω .1% 1/4 W 2 Resistors: 36.55 Ω .1% 1/8 W	 -hp- 0699-0090 -hp- 0698-7169
Resistive Divider	Capacitor: 300 pF 5% Consisting of: 3 Resistors: 1330 Ω .1% 1/4 W Resistor: 43Ω .1% 1/8 W	-hp- 0160-2207 -hp- 0698-7453 -hp- 0698-8264
High-Speed DC Digital Voltmeter	DC Voltage: 0 to ± 10 V External Trigger: Low True TTL Edge Trigger Trigger Delay: Selectable 10 μs to 140 μs	-hp- 3437A
BNC-to-Triax Adapter	50 ohm	-hp- 1250-0595 Adapter or 11172A RF Cable
Resistive Divider ÷ 2.5	Consisting of: Resistor: 30 Ω 1% 1/4 W Resistor: 20 Ω 1% 1/4 W	 -hp- 0698-7533 -hp- 0698-6296
Resistive Divider ÷ 2.6	Consisting of: Resistor: 100 kΩ 1% 1/8 W Resistor: 162 kΩ 1% 1/8 W	 -hp- 0757-0465 -hp- 0757-0470
Calculator	HP-IB Control Capability	-hp- 9825A with 98034A Interface, General I/O ROM, Extended I/O ROM
Adapter	Female BNC-to-Dual Banana Plug BNC Tee	-hp- 1250-2277 -hp- 1250-0781
Step Attenuator	0-12dB; 1dB steps	-hp- 355C

4-35. Equipment Required.

4-36. The test equipment required for the Performance Tests is listed in Table 4-2. Any equipment that satisfies the critical specifications given in the table may be substituted for the recommended model.

4-37. Harmonic Distortion Test.

4-38. This procedure tests the harmonic distortion of the 3325A sine wave output against the following specifications from Table 1-1.

Harmonic Distortion (relative to fundamental)

Fundamental Frequency	No Harmonic Greater Than
0.1 Hz to 50 kHz	−65 dB
50 kHz to 200 kHz	−60 dB
200 kHz to 2 MHz	−40 dB
2 MHz to 15 MHz	−30 dB
15 MHz to 20 MHz	−25 dB

Equipment Required:
High Frequency Spectrum Analyzer (-hp- Model 141T/8552B/8553B/8566A/8568A)
Low Frequency Spectrum Analyzer (-hp- Model 3580A/3585A)
50-ohm Feedthru Termination (-hp- Model 11048C)
Resistor 470Ω 2W 5% (-hp- 0698-3634)
Resistor 56.2Ω 1/8W 1% (-hp- 0757-0395)

a. Set the 3325A output as follows:

High Voltage Output (Option 002) .....Off
Function .....Sine
Frequency .....20 MHz
Amplitude 999mVp-p

b. Connect the 3325A signal output to the high frequency spectrum analyzer's 50 ohm input.

c. Set the spectrum analyzer controls to display the fundamental and at least four harmonics. Verify that all harmonics are 25dB below the fundamental.

d. Set the 3325A to the following frequencies and verify that all harmonics are below the specified levels, relative to the fundamental.

15 MHz	– 30 dB
2 MHz	– 40 dB
200 kHz	– 60 dB

e. Disconnect the 3325A from the high frequency spectrum analyzer and connect it to the low frequency spectrum analyzer's 50 ohm input.

f. Set the 3325A frequency to 50kHz and the amplitude to 9.99mVp-p.

g. Set the spectrum analyzer controls to display the fundamental and at least three harmonics. (It may be necessary to decrease the analyzer's video bandwidth to separate the harmonics from the noise floor.) Verify that all harmonics are a least 65dB below the fundamental.

h. Set the 3325A to the following frequencies and verify that all harmonics are 65dB below the fundamental.

10kHz
1kHz
100Hz

High Voltage Output (Option 2)

i. Connect the 3325A signal output to the low frequency spectrum analyzer's 50Ω input. (See Figure 4-1.)

j. Press the "high voltage output" key on the 3325A. Set the amplitude to 40Vp-p and the frequency to 100Hz.

k. Set the spectrum analyzer controls to display the fundamental and at least three harmonics. Verify that all harmonics are 65dB below the fundamental.

l. Set the 3325A to the following frequencies and verify that their harmonics are below the specified level, relative to the fundamental.

10kHz	-65dB
200kHz	-60dB
1MHz	-40dB

m. Press the high voltage output key to deactivate the high voltage output.

4-39. Spurious Signal Tests.

4-40. This procedure tests the 3325A sine wave output for spurious signals. Circuits within the 3325A may generate repetitive frequencies that are not harmonically related to the fundamental output frequency. All spurious signals must be more than 70dB below the fundamental signal or less than -90dBm, whichever is greater.

Equipment Required:
Spectrum Analyzer (-hp- Model 3585A/8566A/8568A)

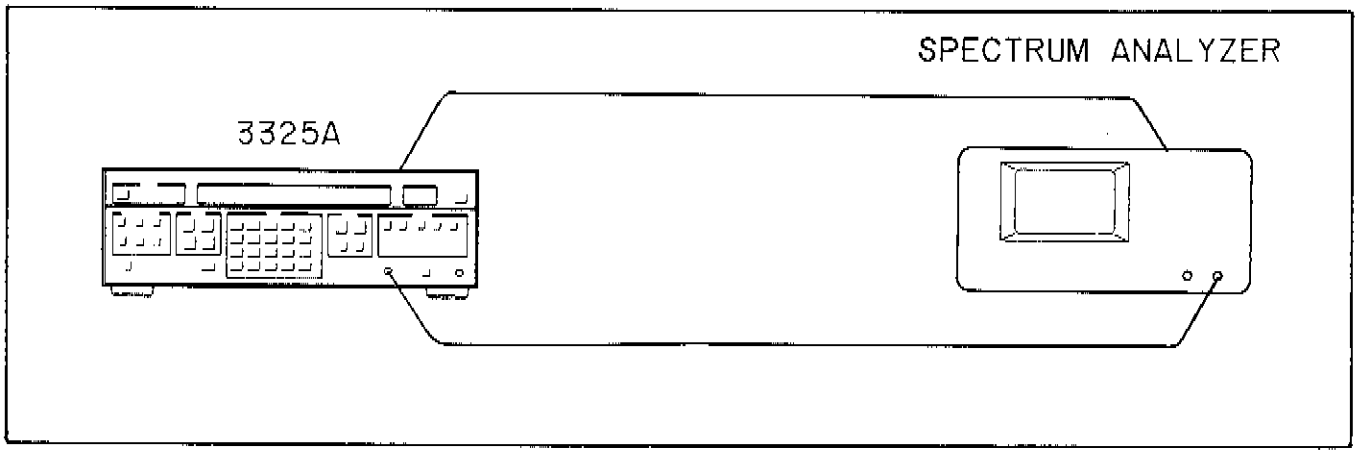

Figure 4-2. Mixer Spurious Test

Mixer Spurious Test

a. Connect the 3325A signal output to the spectrum analyzer 50 ohm (RF) input and the 3325A EXT REF input to the analyzer's 10MHz reference output. (See Figure 4-2.)

b. Set the 3325A as follows:

Function ..... Sine
Amplitude ..... -20dBm
Frequency 2.001MHz

c. Set the analyzer controls as follows:

Center Frequency 2.001MHz
Frequency Span 1kHz
Video BW 100Hz
Resolution BW 30Hz

d. Adjust the spectrum analyzer to reference the fundamental to the top display graticule.

e. Without changing the reference level, change the spectrum analyzer center frequency to 27.999MHz to display the 2:1 mixer spur. Verify that this spur is at least 70dB below the fundamental.

f. Change the spectrum analyzer center frequency to 25.998MHz to display the 3:2 mixer spur. Verify that this spur is at least 70dB below the fundamental.

g. In a similar manner, change the 3325A's frequency and the spectrum analyzer center frequency to the following frequencies. For each setting, verify that all spurious signals are 70dB below the fundamental.

3325A Frequency	Spectrum Analyzer Center Frequency	
	2:1 Spur	3:2 Spur
4.100MHz	25.9MHz	21.8MHz
6.100MHz	23.9MHz	17.8MHz
8.100MHz	21.9MHz	13.8MHz
10.100MHz	19.9MHz	9.8MHz
12.100MHz	17.9MHz	5.8MHz
14.100MHz	15.9MHz	1.8MHz
16.100MHz	13.9MHz	2.2MHz
18.100MHz	11.9MHz	6.2MHz
20.100MHz	9.9MHz	10.2MHz

Close-in Spurious Test
(Fractional N Spurs)

h. Set the 3325A frequency to 5.001MHz and the amplitude to -2.99dBm.

i. Set the spectrum analyzer controls as follows:

Center Frequency 5.001MHz
Frequency Span 1kHz
Video BW 100Hz
Resolution BW 30Hz

j. Adjust the spectrum analyzer to reference the fundamental to the top display graticule.

k. Without changing the reference level, change the spectrum analyzer center frequency to 5.002MHz to display the API 1 spur. It may be necessary to decrease the analyzer's video bandwidth to optimize the display resolution.

l. All spurious (non-harmonic) signals should be at least 70dB below the fundamental.

m. Without changing the reference level, set the 3325A frequency and the spectrum analyzer center frequency to the frequencies listed below. For each setting, verify that all spurious signals are at least 70dB below the fundamental.

3325A Frequency	Spectrum Analyzer Center Frequency
5.0001MHz	5.0011MHz
5.00001MHz	5.00101MHz
5.000001MHz	5.001001MHz
20.001MHz	20.002MHz
20.001MHz	20.003MHz
20.001MHz	20.004MHz
20.001MHz	20.005MHz

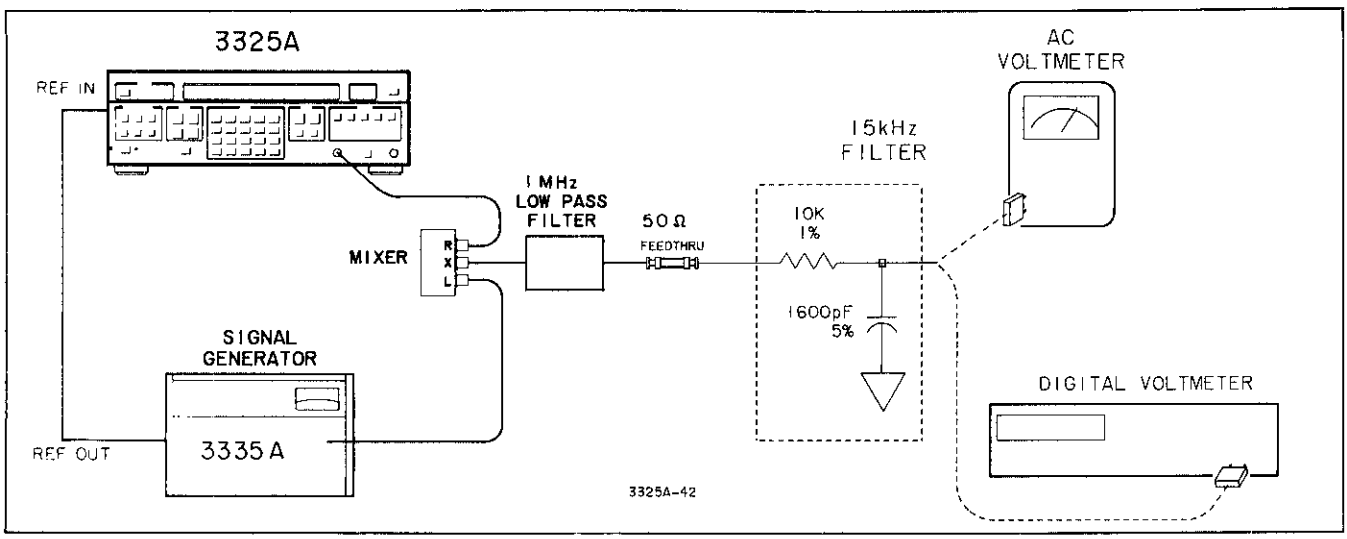

Figure 4-3. Integrated Phase Noise Test

4-41. Integrated Phase Noise Test.

4-42. This test compares the integrated phase noise to the specification in Table 1-1, which is:

> −60 dB for a 30 kHz band centered on a 20 MHz carrier (excluding ±1 Hz about the carrier).

Equipment Required:
Sine wave signal source (-hp- Model 3335A)
Mixer (-hp- Model 10534A)
50-ohm load (-hp- Model 11048C)
DC digital voltmeter (-hp- Model 3455A)
AC voltmeter (-hp- Model 400 FL)
15 kHz noise equivalent filter consisting of:
Resistor: 10 kΩ ±1% (-hp- Part No. 0757-0340)
Capacitor: 1600 pF ±5% (-hp- Part No. 0160-2223) See Figure 4-3
1MHz Low Pass Filter (Model F882 - Allen Avionics)

a. Connect the equipment as shown in Figure 4-3, connecting the 15kHz noise equivalent filter output to the ac voltmeter. Phase lock the 3325A and the signal generator together.

b. Set the 3325A as follows:

Function	Sine
Frequency	19.901 MHz
Amplitude	0 dBm

c. Set the sine wave signal source (reference) as follows:

Frequency	19.9 MHz
Amplitude	+7.00 dBm

d. Record the ac voltmeter reading (dB scale).

e. Change 3325A frequency to 19.9 MHz.

f. Connect the 15 kHz filter output to the dc digital voltmeter.

g. Press the 3325A PHASE entry key. Using the MODIFY keys, adjust the 3325A output phase for a minimum reading on the digital voltmeter.

h. Disconnect the 15 kHz filter output from the digital voltmeter and connect it to the ac voltmeter.

i. Record the ac voltmeter reading (dB scale) and subtract it from the reading recorded in Step d. The difference should be −54 dB or greater. Add −6 dB to this number and enter on the performance test card. The 6 dB is a correction factor compensating for the folding action of the mixer.

NOTE

Frequencies used minimize the phase noise contribution of the 3335A.

4-43. Amplitude Modulation Envelope Distortion Test.

4-44. This procedure tests the 3325A against the amplitude modulation envelope distortion specification in Table 1-1:

> −30 dB to 80% modulation at 10 kHz, 0 V dc offset

Equipment Required:
Sine wave signal source (-hp- Model 204C)
Spectrum Analyzer (-hp- Model 141T/3585A/8552B/8553B/8566A)

a. Connect the equipment as shown in Figure 4-4.

b. Set the 3325A output as follows:

Function	Sine
Frequency	1 MHz
Amplitude	3 Vp-p
DC Offset	0 V
High Voltage Output (Option 002)	Off
AM	On

c. Set the modulating signal source frequency to 10 kHz and adjust the level to produce 80% modulation of the 3325A output. 80% modulation is indicated by

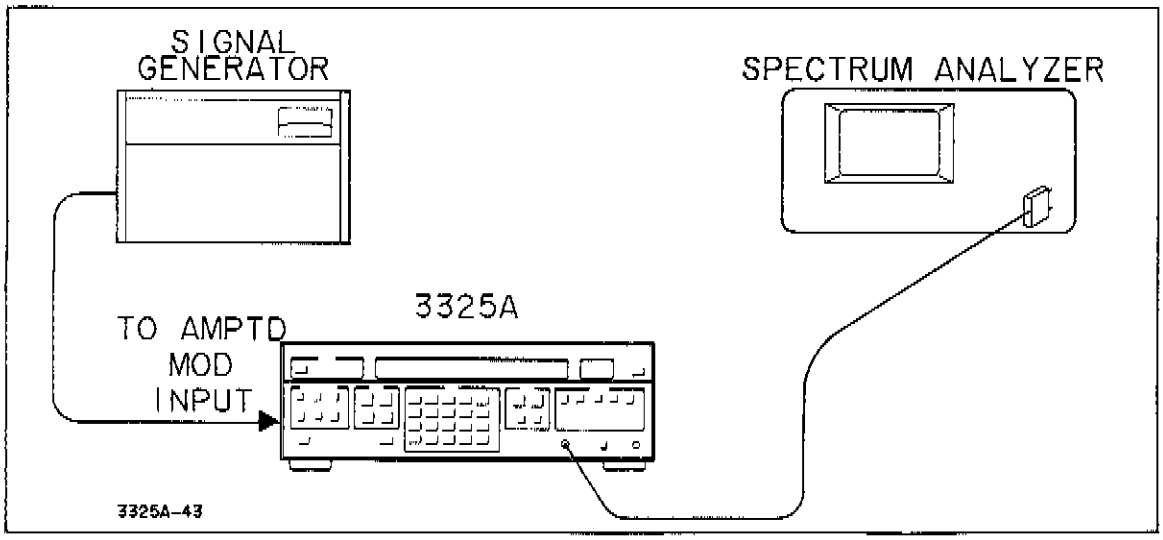

Figure 4-4. AM Envelope Distortion

modulation sidebands being 8.0 dB down from the carrier, as viewed on the 2 dB/div display of the spectrum analyzer.

d. Adjust the spectrum analyzer to display the fundamental frequency, the 10 kHz sideband frequency, and at least 4 harmonics of the sidebands. All harmonics should be at least 30 dB lower than the modulation sidebands.

4-45. Square Wave Rise Time and Abberations.

4-46. This procedure compares the 3325A square wave output to its rise/fall time and overshoot specifications in Table 1-1.

Rise and Fall Time: <20 ns, 10% to 90% at full output
Overshoot: <5% of p-p amplitude at full output

Equipment Required: Oscilloscope (-hp- Model 1740A)

a. Connect the 3325A signal output to the oscilloscope vertical input. If the oscilloscope is an -hp- Model 1740A, set the input switch to the 50-ohm position. If your oscilloscope does not have a 50-ohm input, use a 50-ohm load (-hp- Model 11048C 50-ohm feedthru termination) at the input.

b. Set the 3325A as follows:

High Voltage Output (Option 002) .....Off
Function .....Square
Frequency .....1 MHz
Amplitude .....10 V p-p

c. Adjust the oscilloscope vertical and horizontal controls so that the square wave rise time between the 10% and 90% points can be measured. Rise time should be less than 20 nanoseconds.

d. Adjust the oscilloscope to measure the square wave fall time between the 90% and 10% points. Fall time should be less than 20 nanoseconds.

e. Expand the oscilloscope vertical display and adjust controls so that the overshoot can be measured. Overshoot should be less than 500 mV at positive and negative peaks.

4-47. Ramp Retrace Time.

4-48. This test compares the retrace time of the positive and negative slope ramps to the specifications in Table 1-1:

<3 μs 90% to 10%

Equipment Required: Oscilloscope (-hp- Model 1740A)

a. Connect the 3325A signal output to the oscilloscope vertical input. If the oscilloscope is an -hp- Model 1740A, set the input switch to the 50-ohm position. If your oscilloscope does not have a 50-ohm input, use a 50-ohm load (-hp- Model 11048C 50-ohm feedthru termination) at the input.

b. Set the 3325A as follows:

High Voltage Output (Option 002) .....Off
Function .....Positive Slope Ramp
Frequency .....10 kHz
Amplitude .....10 V p-p

c. Adjust the oscilloscope vertical and horizontal controls so that the ramp retrace time from the 90% to 10% points can be measured. Retrace time should be less than 3 μs.

d. Change function to negative slope ramp and repeat Step c.

4-49. Sync Output Test.

4-50. This procedure checks the voltage levels of the sync output square wave:

$V_{high} > +1.2V$; $V_{low} < +0.2V$ into 50 ohms

Equipment Required: Oscilloscope (-hp- Model 1740A)

a. Connect the 3325A sync output to the oscilloscope vertical input. If the oscilloscope is an -hp- Model 1740A, set the input switch to the 50-ohm position. If your oscilloscope does not have a 50-ohm input, use a 50-ohm load at the input (-hp- Model 11048C 50-ohm Feedthru Termination).

b. Set the 3325A function to sine, frequency to 20 MHz.

c. Adjust the oscilloscope controls to measure the high and low levels of the sync square wave. The high level should be greater than +1.2 V and the low level should be less than +0.2 V.

4-51. Square Wave Symmetry.

4-52. This procedure checks the symmetry of the square wave signal output to the specification in Table 1-1:

0.02% of period + 3 nanoseconds

Equipment Required: Electronic counter (-hp- Model 5328A)

a. Connect the 3325A signal output to both inputs of the electronic counter, using a BNC tee (see Figure 4-5).

b. Set the 3325A output as follows:

Function .....Square
Frequency .....1 MHz
Amplitude .....1 V rms
DC Offset .....0 V

c. Adjust the electronic counter to measure time interval average A to B, with Slope A +, Slope B −. Note the reading.

d. Change Slope A to −, Slope B to +. Reading should be equal to the reading in Step c ± < 3.2 ns.

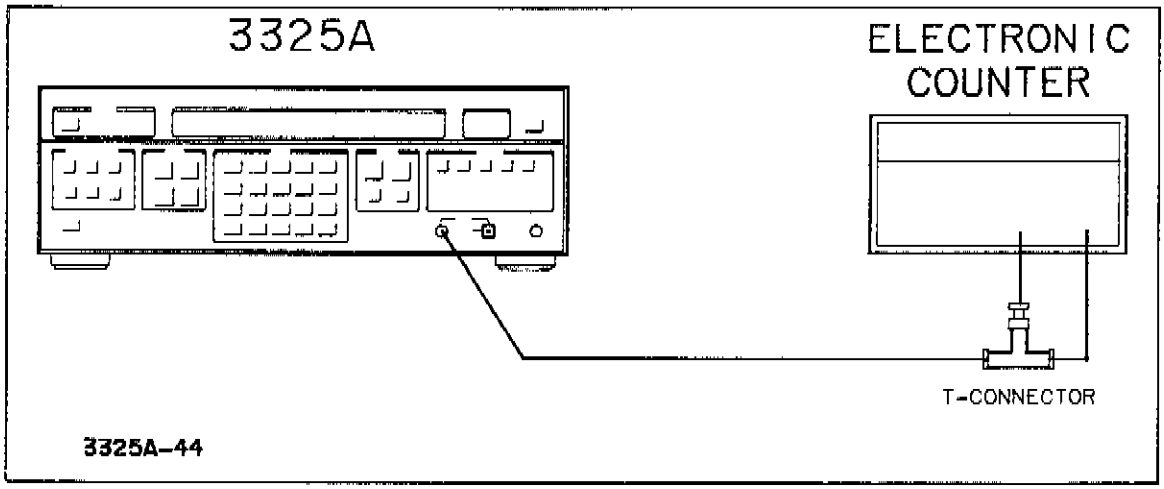

Figure 4-5. Square Wave Symmetry.

4-53. Frequency Accuracy.

4-54. This test compares the accuracy of the 3325A output signal to the specification in Table 1-1:

$\pm 5 \times 10^{-6}$ of selected frequency

Equipment Required: Electronic Counter (-hp- Model 5328A, calibrated within three months or with an accurate 10 MHz external reference input)

a. Connect the 3325A signal output to the electronic counter channel A input with a 50 Ω load. Allow 3325A and counter to warm up for 20 minutes.

b. Set the 3325A output as follows:

Function ..... Sine
Frequency ..... 20 MHz
Amplitude 0.99Vp-p
DC Offset ..... 0 V

c. Set the counter to count the frequency of the A input with 0.1Hz resolution, and adjust for stable triggering. Electronic counter should indicate 20 000 000.0Hz ± 100Hz.

d. Change 3325A function to square wave. Frequency automatically changes to 10 MHz. Electronic counter should indicate 10 000 000.0 Hz ± 50 Hz.

e. Change the 3325A function to triangle. Frequency automatically changes to 10kHz. Move the counter input to the sync output of the 3325A. Set the counter to average 1000 periods. Electronic counter should indicate 100 000.00ns ± 0.5ns.

f. Change 3325A function to positive slope ramp. Electronic counter should indicate 100,000 ns ± .5 ns.

4-55. Phase Increment Accuracy.

4-56. This test compares the phase increment accuracy of the 3325A to the specification in Table 1-1:

± 0.2°

Equipment Required:
Sine wave signal source (-hp- Model 3335A)
Electronic Counter (-hp- Model 5328A)

a. Connect the equipment as shown in Figure 4-7.

b. Set the 3325A as follows:

High Voltage Output (Option 002) ..... Off
Function ..... Sine
Frequency ..... 100 kHz
Amplitude ..... 13 dBm

c. Set the sine wave signal source (3335A) as follows:

Frequency ..... 0.1 MHz
Amplitude ..... 13 dBm

d. Set the electronic counter (5328A) as follows:

Function ..... Time Interval Avg. A to B
Frequency Resolution, N ..... 10^5
Inputs ..... 50 Ω, Separate
Slope A and B ..... Positive
Sample Rate ..... Maximum

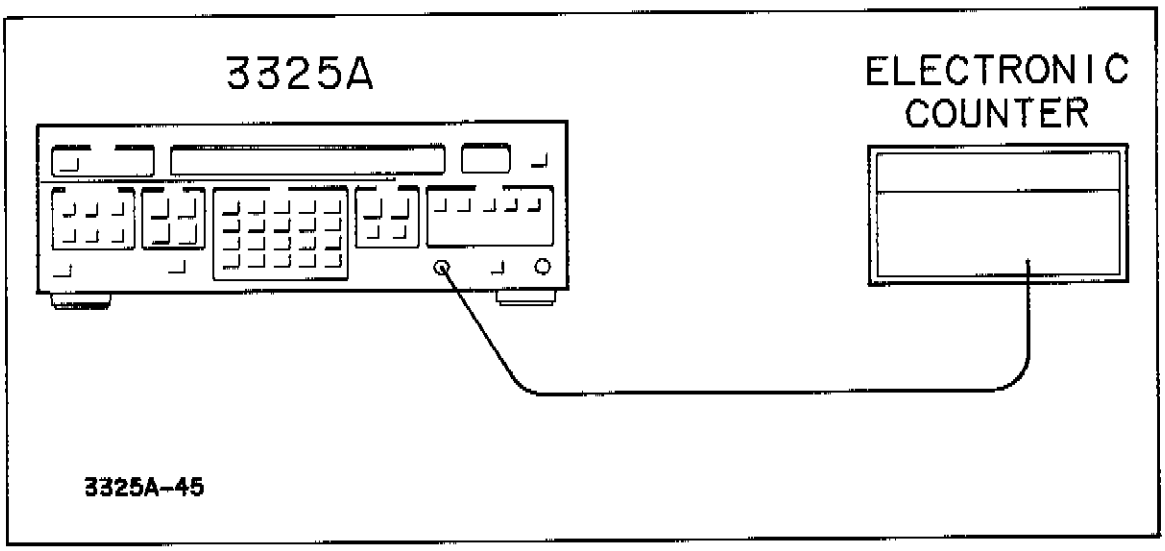

Figure 4-6. Frequency Accuracy.

e. Press the 3325A PHASE entry key to display phase. Using the Modify keys, adjust the phase until the counter reads approximately 200 nanoseconds. Press the 3325A blue entry prefix key, then ASGN ZERO PHASE.

f. Set the electronic counter sample rate to HOLD. Press RESET. Record the counter reading (to 2 decimal places) on the Performance Test Record in the space for "Zero Phase Time Interval". This is the phase difference (in nanoseconds) between the 3325A output and the reference signal.

g. Set the 3325A phase to $-1°$.

h. Press the electronic counter RESET. Record the counter reading (to 2 decimal places) in the space for "1° Increment Time Interval".

i. Determine the time difference between the counter readings in Step h and Step f, and record in the "Time Difference" column. The difference should be from 22.22 ns to 33.34 ns.

j. Set the 3325A phase to $-10°$.

k. Press the electronic counter RESET. Record the counter reading to the space for "10° Increment Time Interval".

l. Enter the time difference between the "Zero Phase Time Interval" and the reading in Step k in the "Time Difference" column. This should be from 272.22 ns to 283.34 ns.

m. Set the 3325A phase to $-100°$.

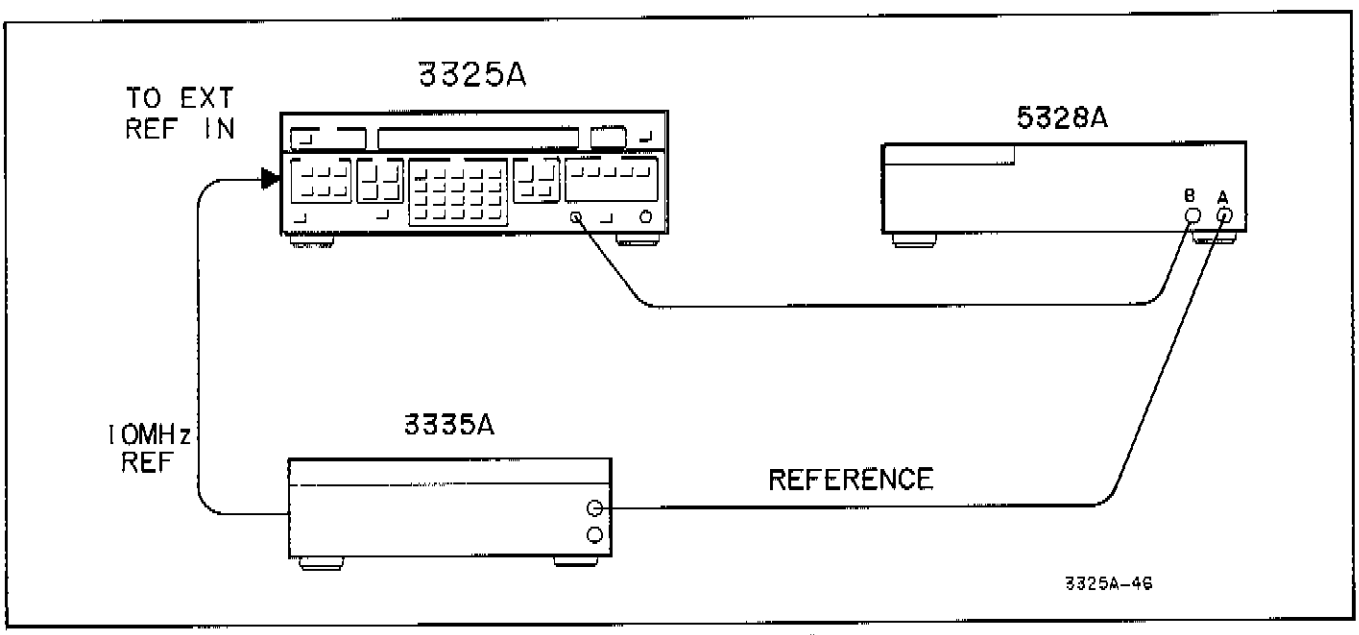

Figure 4-7. Phase Increment Accuracy.

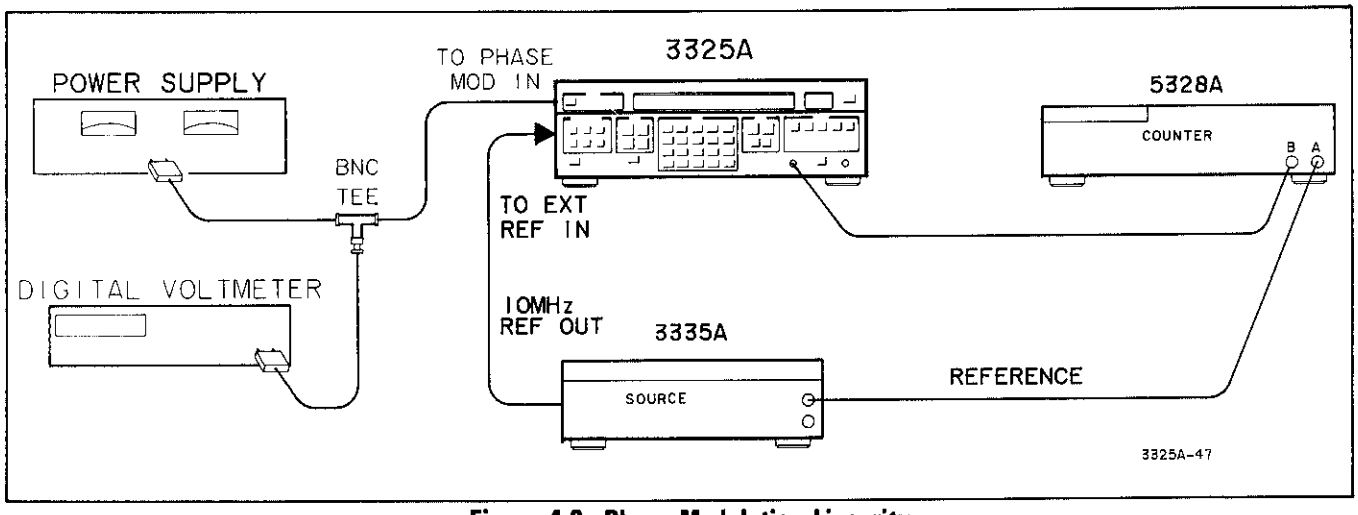

Figure 4-8. Phase Modulation Linearity.

n. Press the electronic counter RESET. Record the counter reading in the space for "100° Increment Time Interval".

o. Enter the time difference between the "Zero Phase Time Interval" and the reading in Step n in the "Time Difference" column. It should be from 2722.22 ns to 2783.34 ns.

4-57. Phase Modulation Linearity.

4-58. This procedure tests the phase modulation linearity. The specification in Table 1-1 is:

±0.5%, best fit straight line

Equipment Required:
Sine wave signal source (-hp- Model 3335A)
Electronic counter (-hp- Model 5328A)
DC power supply (-hp- Model 6214A)
Digital voltmeter (-hp- Model 3455A)

a. Connect the equipment as shown in Figure 4-8.

b. Set the 3325A as follows:

High Voltage Output (Option 002) .....Off
Function .....Sine
Frequency 100kHz
Amplitude .....13 dBm
Phase Modulation .....On

c. Set the sine wave signal source (3335A) as follows:

Frequency 100kHz
Amplitude .....13 dBm

d. Set the electronic counter (5328A) as follows:

Function .....Time Interval Avg. A and B
Frequency Resolution, N.....10^5
Inputs .....50 Ω, Separate
Slope A and B .....Positive
Sample Rate .....Maximum

e. Using the digital voltmeter to monitor the dc power supply output, set the dc voltage as near −5.0000 V as possible.

f. Press the 3325A PHASE entry key to display phase. Using the Modify keys, adjust the phase until the counter reads approximately 200 nanoseconds. Record the counter reading as a reference for the following steps.

g. As soon as possible after recording the counter reading, note the digital voltmeter reading and record on the Performance Test Record in the "DVM Reading, x_1" space.

h. Press the 3325A blue prefix key, then ASGN ZERO PHASE.

i. Change the dc power supply output to −4.0000 V.

j. Using the Modify keys, adjust the 3325A phase to return the counter reading to the value recorded in Step f.

k. Record the digital voltmeter reading in the "DVM Reading, x_2" space.

1. The 3325A display indicates the phase change resulting from the 1 V change in modulating voltage. Record the phase display in the "Phase Difference, 2" space (positive value).

m. Press the 3325A blue prefix key, then ASGN ZERO PHASE.

n. Change the power supply output to the following voltages and repeat Steps j through m for each. Record the dvm readings and phase differences in the appropriate spaces on the Performance Test Record.

DC Voltage	DVM Reading	Phase Difference
−3.0000 V	x_3	3
−2.0000 V	x_4	4
−1.0000 V	x_5	5
0.0000 V	x_6	6
+1.0000 V	x_7	7
+2.0000 V	x_8	8
+3.0000 V	x_9	9
+4.0000 V	x_{10}	10
+5.0000 V	x_{11}	11

o. Enter the cumulative phase change in the "Cumulative Phase" column. That is, enter the "2" Phase Difference in the y_2 space, then add the "y_2" and "3" values and enter in the y_3 space. Add the "y_3" and "4" values and enter in y_4, etc.

p. On the Performance Test Record, multiply each x value by the corresponding y value and enter in the "x times y" column.

q. Total the "DVM Reading" column and enter in the Σx space. Total the "Cumulative Phase" values and enter in the Σy space. Total the "x times y" values and enter in the Σxy space.

r. Square each x value and enter in the "x^2" column. Total this column and enter in the Σx^2 space.

s. Square the Σx value and enter in the $(\Sigma x)^2$ space.

t. Multiply the Σx value by the Σy value and enter in the $\Sigma x \Sigma y$ space.

u. The equation for determining the "best fit straight line" specification for each y value is:

$$y = a_1 x + a_0$$

Where: $a_1 x$ and a_0 are constants to be calculated from data taken previously

Where: x is the value of the modulating voltage, recorded as x_1 through x_{11}

v. First determine the value of a_1 using the following equation:

$$a_1 = \frac{\Sigma xy - \frac{\Sigma x \Sigma y}{n}}{\Sigma x^2 - (\Sigma x)^2/n}$$

Where: Σx, Σy, Σxy, $\Sigma x \Sigma y$, Σx^2, and $(\Sigma x)^2$ are the previously calculated values entered on the Performance Test Record

n = 11 (the number of points to be calculated)

w. Determine the value of a_0 using the equation:

$$a_0 = \frac{\Sigma y}{n} - a_1 \frac{\Sigma x}{n}$$

x. Calculate each value for y using the equation: $y = a_1 x + a_0$. Enter each result on the Performance Test Record in the "Best Fit Straight Line Values" column, (y_1 through (y_{11}).

y. Determine the test limits for each y value by increasing and decreasing the calculated (y) values by 0.5% of the (y_{11}) value. Enter in the Maximum and Minimum columns.

z. Transfer the y_1 through y_{11} "Cumulative Phase" entries to the "Measured Cumulative Phase" column. Each value should be within the calculated limits.

4-59. Amplitude Accuracy.

4-60. This procedure tests the amplitude of the 3325A ac function output signals against the accuracy specifications in Table 1-1.

Equipment Required:

AC/DC digital voltmeter (-hp- Model 3455A, average converter opt. 001 preferred)
AC: Accuracy sufficient to verify a 1% specification to 100 kHz.
DC: Resolution, 1 microvolt.

High speed DC voltmeter (-hp- Model 3437A). At least 3½-digit resolution, 1½ microsec. or faster settling time.

50-Ohm step attenuator (-hp- Model 355C)

50-Ohm feedthru termination (-hp- Model 11048C)

Thermal converter (-hp- Model 11050A)

Oscilloscope (-hp- Model 1740A) Must have delayed sweep of .05 microsec/div and delayed sweep gate output.

Components:
Resistor 36.55 ohm 0.1% 0.125W 2 ea 0698-7169
Resistor 61.11 ohm 0.1% 0.25W 2 ea 0699-0090
Resistor 43ohm* 0.1% 0.125W 1 ea 0698-8264
Resistor 1330ohm* 0.1% 0.25W 3 ea 0698-7453
Capacitor 300 pF* 5% 1 ea 0160-2207
*Used only to test High Voltage (option 002).

Amplitude Accuracy at Frequencies up to 100 kHz

a. Sine Wave Test. Connect the 3325A signal output through a 50 ohm feedthrough termination to the AC digital voltmeter input.

b. Set the 3325A as follows:

High Voltage Output (Option 002)	Off
Function	Sine
Frequency	100 Hz
Amplitude	3.536 V_{RMS}(10 Vp-p)
DC Offset	0 V

c. Press AMPTD CAL key.

d. Read AC Voltmeter. Change 3325A frequency to 1 kHz and 100 kHz and repeat. Verify that all three voltmeter readings are between 3.495 V_{RMS} and 3.577 V_{RMS} (±0.1 dB).

e. Change 3325A amplitude to 1.061 V_{RMS} (3 Vp-p) and take ac voltage readings for 100 Hz, 1 kHz and 100 kHz as above. Verify that all three voltmeter readings are between 1.048 V_{RMS} and 1.073 V_{RMS} (±0.1 dB).

f. Change 3325A amplitude to .3536 V_{RMS} and set dc offset to 1 mV. Set 3325A frequency to (100 Hz, 1 kHz, and 100 kHz and read ac voltage. Verify that all three readings are between .3411 V_{RMS} and .3660 V_{RMS} (±0.3 dB).

g. Function Test. Connect 3325A sync output to external trigger input of oscilloscope. Connect 3325A signal output to the voltage divider of Figure 4-10(A). Connect the voltage divider output to oscilloscope vertical input and to high speed voltmeter input. Connect delayed sweep gate from oscilloscope to external trigger input of high speed voltmeter. See Figure 4-9 A.

h. Set the 3325A as follows:

High Voltage Output (Option 2)	OFF
DC Offset	0 V
Amplitude	10 Vp-p
Frequency	99.9 Hz
Function	Square

i. Set the oscilloscope as follows:

Display	A or B
Vertical Sensitivity	.5 volts/div
Trigger	Ext
Main Sweep	1 msec/div
Delayed Sweep	5 μsec/div
Delay	250

j. Set the 3437A voltmeter as follows:

Range	1.0 V
Trigger	Ext
Delay	0 sec
Coupling	DC 1MΩ

k. One cycle of the square wave should fill the screen of the oscilloscope, and the sample time for the voltmeter should be seen as the intensified spot of the delayed sweep.

l. Press AMPTD CAL on the 3325A.

m. Read positive peak voltage of attenuated waveform on voltmeter. If the reading is not stable, press hold, then ext. alternatively to repeat readings. Change oscilloscope delay to 750 and read negative peak. Add the two readings to obtain volts peak to peak. Verify that sum is between 3.661 volts and 3.735 volts.

n. Change 3325A function to Triangle. Change oscilloscope to:

Vertical Sensitivity	.2 volts/div
Vertical Position	9 o'clock
Main Sweep	.5 msec/div
Delay	500
Magnify	X10
Delayed Sweep	1 μsec/div

o. Adjust oscilloscope delay to place the intensified spot on peak of triangle and read positive peak voltage on 3437A. Press neg trigger, move vertical position knob of CR0 to 3 o'clock and adjust intensified spot to read negative peak on the 3437A. Verify that sum of positive and negative peak voltages is between 3.643 and 3.754 volts.

p. Change 3325A function to pos ramp. Change oscilloscope to:

Trigger	pos
Main Sweep	2 msec/div

Place spot on positive peak, press hold, then ext, then hold a few times on the 3437A and record most positive reading.

q. Move vertical position knob to 3 o'clock, adjust delay and read negative peak. Ramp jitter should be visible on all ramp readings (the 3437A will hold the readings). Verify that sum of pos and neg peaks is between 3.643 and 3.754 volts.

r. Change 3325A function to neg ramp. Change CRO trigger to pos and take neg ramp reading as above.

s. Change 3325A function to square and frequency to 1 kHz. Set CR0 as follows:

Main Sweep	50 μsec/div
Delayed Sweep	.05 μsec/div

Read positive peak; push neg trigger and read negative peak. Verify that sum is between 3.661 and 3.735 volts.

t. Change 3325A function to triangle and frequency to 2 kHz. Set CRO main sweep to 20 μsec/div and delay to 610. Adjust delay and position and set pos and neg trigger to read peaks. Verify Vp-p to be between 3.643 and 3.754 volts.

u. Change 3325 function to pos ramp and frequency to 500 Hz. Set main sweep of CRO to .2 msec/div and adjust sweep vernier to return peaks to center screen (trigger must be neg to see jitter at this point). Verify Vpp to be between 3.643 and 3.754 volts.

v. Change 3325A function to neg ramp and CRO trigger to pos. Verify Vpp of 3.643 to 3.754 volts.

w. Change 3325A frequency to 100 kHz and function to square. Return CRO sweep vernier to calibrate and set main sweep to .5 μsec/div and magnify to off. Read pos and neg peak voltages in the center of the screen. By pressing pos/neg trigger. Verify Vpp of 3.661 to 3.735 volts.

x. Change 3325A function to triangle (frequency will go to 10 kHz). Set CRO main sweep to 5 μsec/div and press magnify. Verify Vpp of 3.513 to 3.883 volts.

y. Change 3325A function to pos ramp. Set cro main sweep to 20 μsec/div. Adjust delay to set end of intensified spot on highest peak. Verify Vpp of 3.328 to 3.996 volts.

z. Change 3325A function to neg ramp. Verify Vpp of 3.328 to 3.996 volts.

aa. Change 3325A amplitude to 3Vp-p, and remove the voltage divider from the circuit. Reconnect the 3325A signal output to the oscilloscope and voltmeter through the 50 ohm feedthru termination. Set the 3325A frequency to 99.9Hz and the function to square.

bb. Repeat tests i through z. New test limits are as follows:

Test	Frequency	Function	Minimum	Maximum
m	99.9 Hz	Square	2.970 V	3.030 V
o	99.9 Hz	Triangle	2.955 V	3.045 V
q	99.9 Hz	Pos Ramp	2.955 V	3.045 V
r	99.9 Hz	Neg Ramp	2.955 V	3.045 V
s	1 kHz	Square	2.970 V	3.030 V
t	2 kHz	Triangle	2.955 V	3.045 V
u	500 Hz	Pos Ramp	2.955 V	3.045 V
v	500 Hz	Neg Ramp	2.955 V	3.045 V
w	100 kHz	Square	2.970 V	3.030 V
x	10 kHz	Triangle	2.850 V	3.150 V
y	10 kHz	Pos Ramp	2.700 V	3.300 V
z	10 kHz	Neg Ramp	2.700 V	3.300 V

cc. Change 3325A amplitude to 1 Vpp, and set dc offset to 1 mV. Set frequency to 99.9 Hz and function to square. Set CRO vertical sensitivity to .05 volts/div for all 1 Vpp tests.

dd. Repeat tests i through z. New test limits are as follows:

Test	Frequency	Function	Minimum	Maximum
m	99.9 Hz	Square	.970	1.030
o	99.9 Hz	Triangle	.960	1.040
q	99.9 Hz	Pos Ramp	.960	1.040
r	99.9 Hz	Neg Ramp	.960	1.040
s	1 kHz	Square	.970	1.030
t	2 kHz	Triangle	.960	1.040
u	500 Hz	Pos Ramp	.960	1.040
v	500 Hz	Neg Ramp	.960	1.040
w	100 kHz	Square	.970	1.030
x	10 kHz	Triangle	.940	1.060
y	10 kHz	Pos Ramp	.890	1.110
z	10 kHz	Neg Ramp	.890	1.110

High Voltage Output Amplitude Accuracy For Frequencies To 100 kHz
(For Instruments with High Voltage Option 002)

ee. Sine Wave Test. Connect 3325A signal output to the AC voltmeter via a 6 ft. cable. Connect a 500 Ω, 300 pF load (at either end) in parallel with the line.

ff. Press the 3325 high voltage key near the 3325A output connector. A LED in the key indicates that the high voltage output is on.

gg. Set 3325A function to sine, frequency to 2 kHz, and amplitude to 14.14 V_{RMS} (40 Vpp). Press AMPTD CAL key. The AC voltmeter reading should be 13.86 to 14.42 V_{RMS}.

hh. High Voltage Function Test. Connect 3325A signal output to CRO and voltage divider via a 6 ft. cable. Trigger CRO on 3325A sync output. Trigger high speed DC voltmeter on delayed sweep gate from CRO See Figure 4-9B.

ii. The voltage divider shown in Figure 4-9B is built into a small metal box with 2 BNC connectors. Parts used are:

R3, 443 ohm, consists of 3 parallel 1330 ohm resistors, each 0.1%, 0.25 watt, -hp- Part Number 0698-7453

R4, 43 ohm, 0.1%, 0.125 watt, -hp- Part No. 0698-8264

C1, 300 pF, 5%, -hp- Part Number 0160-2207

Connect the tap to the input of high speed DC voltmeter as shown in Figure 4-9B.

jj. Set 3325A frequency to 2 kHz and amplitude to 40 Vpp. Set DC voltmeter to 1V range and ext trigger. Set oscilloscope as follows:

Vertical Sensitivity	2 volts/div
Vertical Position	8 o'clock
Trigger	Ext
Main Sweep	20 μsec/div
Delayed Sweep	.05 μsec/div
Delay	615
Magnify	X10

kk. Set 3325A to square wave and read positive peak on DC voltmeter. Switch CRO to neg trigger, take vertical position to 4 o'clock, and read neg peak. Verify that peak to peak voltage is between 3.466 and 3.607 volts.

ll. Change 3325A function to triangle, and read peak voltages. Vpp should be 3.466 to 3.607 volts.

mm. Change 3325A to pos ramp. Change CRO main sweep to .1 msec/div and delay to 500. Verify Vpp of 3.466 to 3.607 volts. Repeat for neg ramp by changing CRO trigger to pos.

Amplitude Flatness: (Frequencies above 100 kHz)

nn. Set the 3325A as follows:

High Voltage Output (Option 2)	OFF
Function	Sine
Frequency	1 kHz
Amplitude	3 Vpp

oo. Set the 50 Ω attenuator (-hp- Model 355C) to 3 dB and connect to signal output. Connect 1 V_{RMS} thermal converter (-hp- 11050A) to attenuator output. Connect DC digital voltmeter with microvolt resolution (-hp- 3455A) to thermal converter output. See Figure 4-9C.

pp. Press 3325A AMPTD CAL key. Record the voltmeter reading in the 3 V sine wave 1 kHz reference space on the performance test record.

qq. Set the 3325A modify key to the 1MHz position and bump the frequency in 2MHz steps from 1kHz to 20.001MHz, recording the voltmeter reading at each frequency. In each case, allow the thermal converter several seconds to stabilize.

rr. Verify that all flatness readings are within ± 6.6% of the 1 kHz reference reading.

ss. Change attenuator to 12 dB. Change 3325A amplitude to 10 Vpp. Repeat steps pp and qq for 10 Vpp. Verify that all readings are within 6.3% of the 1 kHz reference.

tt. Disconnect the thermal converter from the 3325A output.

uu. Square wave flatness. Set the 3325A as follows:

High Voltage Output (Option 2)	OFF
Function	Square
Amplitude	10 Vpp
Frequency	1 kHz

vv. Connect the 3325A signal output to an oscilloscope (-hp- 1740A) with a 50Ω load. Set the oscilloscope as follows:

Vertical Sensitivity	2 volts/div
Time/Div	.1 msec

ww. Use the modify keys to bump the 3325A frequency from 1 kHz to 10.001 MHz in 2 MHz steps. Two lines will appear on the oscilloscope. Verify that they remain within ½ major division of 5 divisions apart for all 11 frequencies.

xx. High Voltage (Option 2) Amplitude Flatness above 100kHz.

yy. Connect the 3325A output to an oscilloscope (-hp- 1740A) with a 500 Ω, 500 pF load (load attached at either end). Cable capacitance (30pF/foot) must be included in the 500 pF. The HV divider (Figure 4-9B) may be used with 6 feet of cable.

zz. Set the oscilloscope as follows:

Vertical Sensitivity	10 volts/div
Time/Div	1 msec

aaa. Set the 3325A to 40 Vpp sine wave (HV option on) and 1 kHz. Adjust oscilloscope intensity and focus for a sharp trace.

bbb. Use the modify keys to bump the 3325A frequency from 1 kHz to 1.001 MHz in 200 kHz steps. Verify that the width of the bright region of the screen is 4 ± .4 divisions for all 11 frequencies.

4-61. DC Offset Accuracy (DC Only).

4-62. This procedure tests the dc offset accuracy when no ac function output is present. The dc only specification in Table 1-1 is:

±0.4% of full range*

* Except lowest attenuator range where accuracy is ±20μV

Equipment Required:

DC digital voltmeter with 5-digit resolution, capable of measuring >20 V for High Voltage Output Option 002 (-hp- Model 3455A)

50-ohm Feedthru termination (-hp- Model 11048C)

a. Connect the 3325A signal output through the 50-ohm feedthru termination to the dc digital voltmeter input (see Figure 4-11(A)).

b. Press whichever function key is presently active, indicated by a lighted indicator in the center of the key. This removes the ac output. The indicator in the center of the "DC OFFSET" entry key should light.

c. Set the 3325A dc offset to 5 V, then press the "AMPTD CAL" key.

d. The dc digital voltmeter reading should be +4.980 to +5.020 V.

e. Change 3325A dc offset to −5 V. Digital voltmeter reading should be −4.980 to −5.020 V.

Attenuator Test

f. Set the dc offset to the positive and negative voltages shown below. The digital voltmeter reading should be within the tolerances shown for each voltage.

DC Offset	Tolerances
±1.499 V	±1.49300 to 1.50499 V
±499.9 mV	±0.49790 to 0.50190 V
±149.9 mV	±0.14930 to 0.15050 V
±49.99 mV	±0.04979 to 0.05019 V
±14.99 mV	±0.01493 to 0.01505 V
±4.999 mV	±0.004979 to 0.005019 V
±1.499 mV	±0.001479 to 0.001519 V

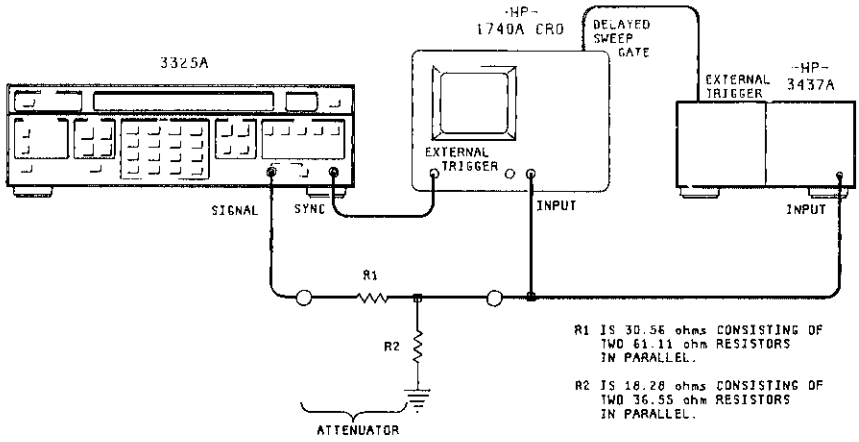

A. Function Amplitude Accuracy, Standard Output (< 100 kHz)

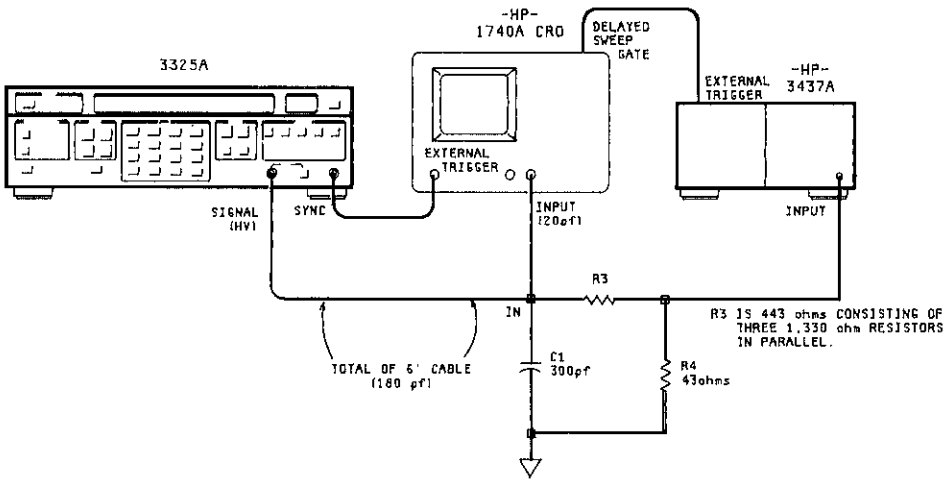

B. Function Amplitude Accuracy, High Voltage Output (< 100 kHz)

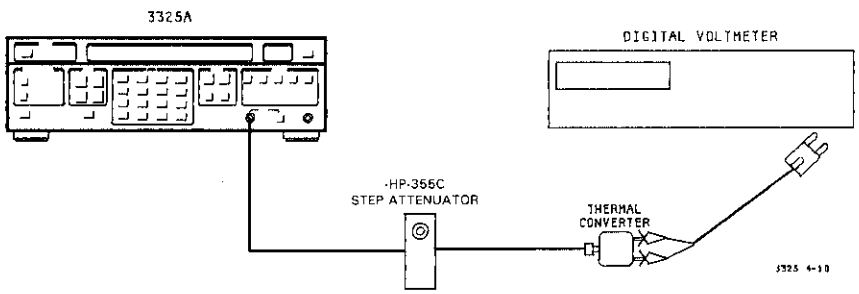

C. Amplitude Flatness (> 100 kHz)

Figure 4-9. Amplitude Accuracy and Flatness.

High Voltage Output Option 002 DC Offset

g. Remove the 50-ohm feedthru and connect the 3325A output directly to the digital voltmeter input.

h. Press the "SIGNAL" key in the lower right corner of the 3325A front panel to select High Voltage Output (Option 002). Lighted indicator in the center of this key indicates High Voltage Output is on.

i. Set 3325A dc offset to 20 V. Digital voltmeter reading should be +19.775 V to 20.225 V.

j. Set 3325A dc offset to −20 V. Digital voltmeter reading should be −19.775 V to −20.225 V.

4-63. DC Offset Accuracy with AC Functions.

4-64. The specifications for DC Offset accuracy with AC Functions given in Table 1-1 are as follows:

DC + AC, ≤1 MHz: ±1.2%, Ramps ±2.4%
DC + AC, >1 MHz: ±3%

Equipment Required:
DC Digital voltmeter (-hp- Model 3455A)
50-ohm feedthru termination (-hp- Model 11048C)

a. Connect the equipment as shown in Figure 4-10 A . Set the digital voltmeter to measure dc voltage.

b. Set the 3325A output as follows:

High Voltage Output (Option 002) .....Off
Function .....Sine
Frequency .....20.999 999 999 MHz
Amplitude .....1 V p-p
DC Offset .....+4.5 V

c. Press AMPTD CAL key. After amplitude calibration (approximately 2 seconds) the digital voltmeter reading should be +4.350 to +4.650 V dc.

d. Change the dc offset to −4.5 V. Digital voltmeter reading should be −4.350 to −4.650 V dc.

e. Change the 3325A frequency to 999.9 kHz. The digital voltmeter reading should be −4.440 to −4.560 V dc.

f. Change the 3325A dc offset to (+) 4.5 V. The digital voltmeter reading should be +4.440 to +4.560 V dc.

g. Set the 3325A function to Square. The digital voltmeter reading should be +4.440 to +4.560 V dc.

h. Change the 3325A dc offset to −4.5V. The digital voltmeter reading should be −4.440 to −4.560 V dc.

i. Change the 3325A frequency to 9.9999 MHz. The digital voltmeter reading should be −4.350 to −4.650 V.

j. Set the 3325A function to Triangle, frequency to 9.9 kHz. The digital voltmeter reading should be −4.440 to −4.560 V.

k. Set the 3325A function to + Ramp. The digital voltmeter reading should be −4.380 to −4.620 V.

4-65. Triangle Linearity.

4-66. This procedure tests the linearity of the triangle wave output against the specification in Table 1-1:

±0.05% of full output, 10% to 90%, best fit straight line

Because the triangle and ramp outputs are generated by the same circuits, this procedure effectively tests the ramp linearity also.

Equipment Required:
High-speed dc digital voltmeter (This procedure is written to use the high speed and delay capabilities of the -hp- Model 3437A)
Resistive divider, ÷2.5, consisting of:
30 ohms ±1% ¼W (-hp- Part No. 0698-7533)
20 ohms ±1% ¼W (-hp- Part No. 0698-6296)
BNC-to-Triax adapter (-hp- Part No. 1250-0595 or Model 11172A RF Cable)

a. Connect the 3325A and the high-speed digital voltmeter through the divider as shown in Figure 4-10B.

b. Set the 3325A as follows:

High Voltage Output (Option 002) .....Off
Function .....Triangle
Frequency .....10 kHz
Amplitude .....10 V p-p

c. Set the digital voltmeter as follows:

Range .....1 V
Number of Readings 1
Trigger .....Ext

NOTE

The Model 3437A triggers on the negative-going edge of the 3325A sync square wave.

d. Set the digital voltmeter delay to .00003 (seconds). Record the digital voltmeter reading on the Performance Test Record under "Positive Slope Measurement, (10%) y_1". This is the 10% point on the positive slope of the triangle. See Figure 4-11.

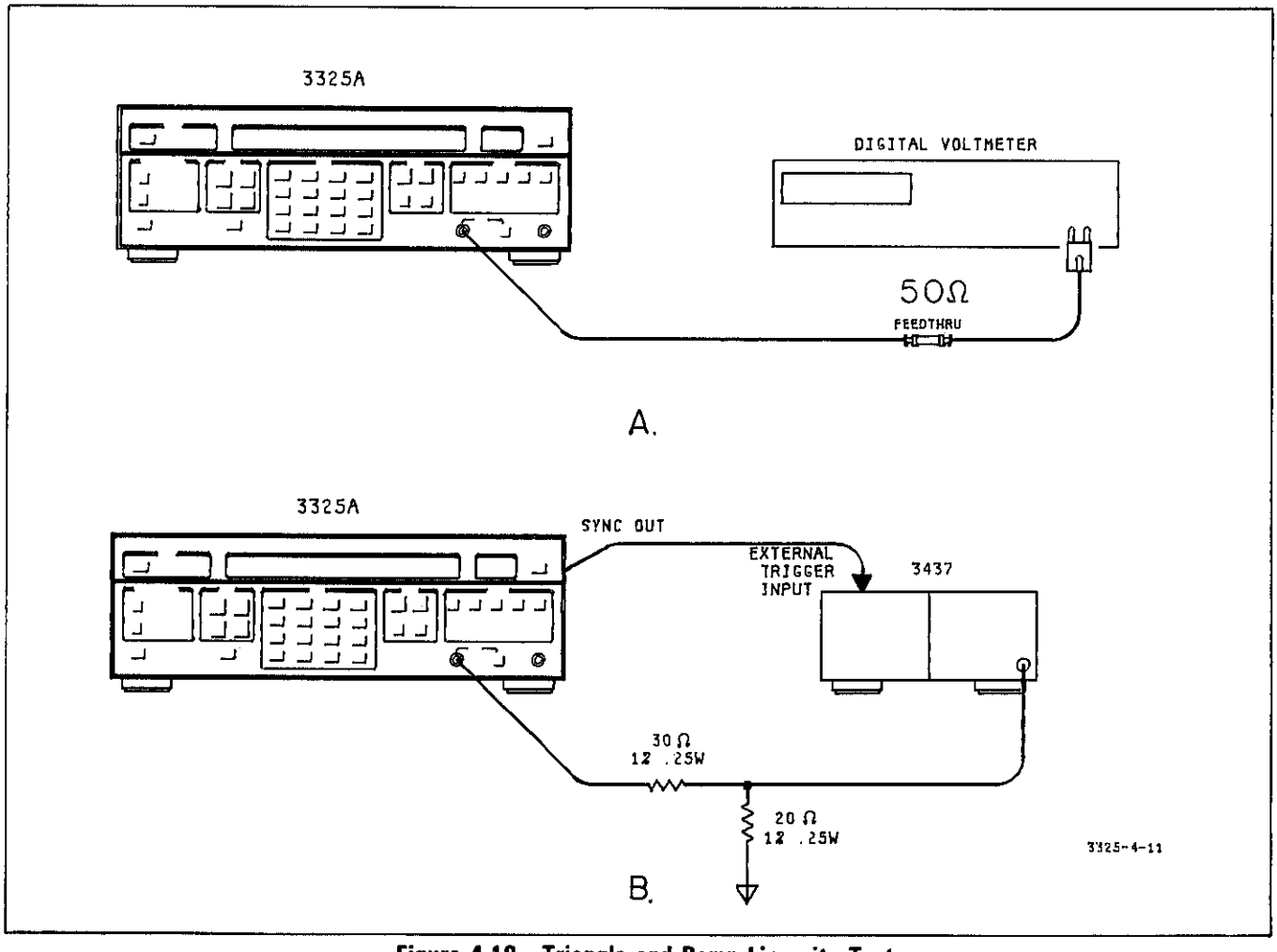

Figure 4-10. Triangle and Ramp Linearity Test.

e. Measure the voltage at each 10% segment point by setting the digital voltmeter delay to the following. Enter on the Performance Test Record in the appropriate spaces under "Positive Slope Measurement."

Delay	Percent of Slope
.000035	20
.00004	30
.000045	40
.00005	50
.000055	60
.00006	70
.000065	80
.00007	90

f. Measure the voltage at each 10% segment point on the negative slope by setting the digital voltmeter delay to the following. Enter the readings on the Performance Test Record in the appropriate spaces under "Negative Slope Measurement."

Delay	Percent of Slope
.00008	90
.000085	80
.00009	70
.000095	60
.0001	50
.000105	40
.00011	30
.000115	20
.00012	10

g. Algebraically add the voltages recorded in the "Positive Slope Measurement" column and enter the total in the "Σy" space.

h. Multiply Σy by 45 (which is Σx) and enter the result in the "ΣxΣy" space.

i. Multiply each y value by the corresponding x value and enter in the "x times y" column. Total these values and enter in the "Σxy" space.

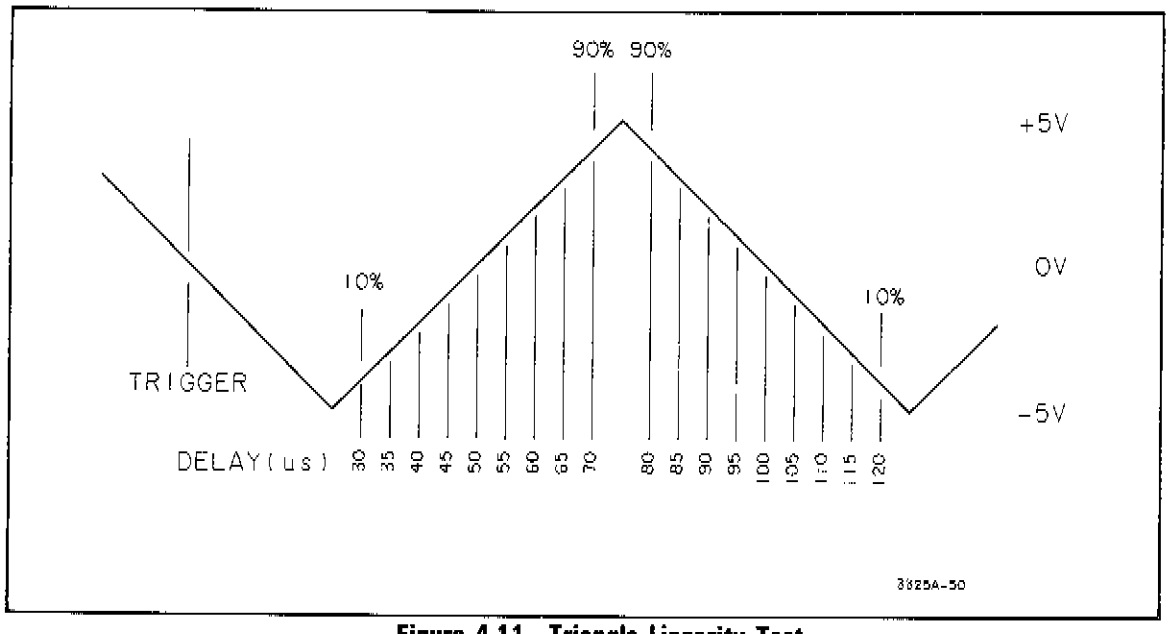

Figure 4-11. Triangle Linearity Test.

j. The equation for determining the "best fit straight line" specification for each y value is:

$$y = a_1x + a_0$$

Where: a_1 and a_0 are constants to be calculated from data taken previously.

NOTE

Calculate the values of a_1 and a_0 to at least five decimal places.

k. First determine the value of a_1 using the following equation:

$$a_1 = \frac{\Sigma xy - \frac{\Sigma x \Sigma y}{n}}{\Sigma x^2 - \frac{(\Sigma x)^2}{n}}$$

Where: Σx, Σy, Σxy, $\Sigma x\Sigma y$, Σz^2, and $(\Sigma x)^2$ are the previously calculated values entered on the Performance Test Record.

$n = 9$ (the number of points to be calculated)

l. Determine the value of a_0 using the equation:

$$a_0 = \frac{\Sigma y}{n} - a_1 \frac{\Sigma x}{n}$$

m. Calculate the "Best Fit Straight Line" value for each point (y_1 through y_9) using the equation:

$$y = a_1x + a_0$$

Enter each result on the Performance Test Record in the "Best Fit Straight Line" column.

n. Determine the minimum and maximum allowable voltages at each point by subtracting and adding 0.002 V to the voltages calculated in Step m (10 V ÷ 2.5 x 0.05 %). Enter these voltage limits on the Performance Test Record under "Minimum" and "Maximum". The voltages measured and recorded in the "Positive Slope Measurement" column should be within these calculated tolerances.

o. Algebraically add the voltages recorded in the "Negative Slope Measurement" column and enter the total in the "Σy" space.

p. Repeat Steps h through n to determine the "Best Fit Straight Line" values and tolerances for the negative slope. The voltages measured and recorded in the "Negative Slope Measurement" column should be within the calculated tolerances.

4-67. X Drive Linearity.

4-68. This procedure tests the linearity of the rear panel X Drive output to the specification in Table 1-1: for all linear sweep widths which are integral multiples of the minimum sweep width for each function and sweep time:

±0.1% of final value, 10% to 90%, best fit straight line.

Equipment Required:
- High-speed dc digital voltmeter (This procedure is written to use the high speed and delay capabilities of the -hp- Model 3437A)
- Resistive divider, ÷ ~2.6, consisting of:
  - 100kΩ 1% 1/8W (-hp- Part No. 0757-0465)
  - 162kΩ 1% 1/8W (-hp- Part No. 0757-0470)
- DC power supply (-hp- MOdel 6214A)
- BNC-to-Triax adapter (-hp- Part No. 1250-0595 Model 11172A RF Cable)

a. Connect the equipment as shown in Figure 4-12.

b. Set the 3325A as follows:

High Voltage Output (Option 002)	Off
Function	Sine
Amplitude	10 V p-p
Sweep Start Frequency	1 MHz
Sweep Stop Frequency	10 MHz
Sweep Marker Frequency	4 MHz
Sweep Time	0.01 sec

c. Press 3325A START CONT key.

d. Set the digital voltmeter as follows:

Range	1 V
Number of Readings	1
Trigger	Ext

NOTE

The model 3437A triggers on the negative going edge of the Z Blank signal, which occurs at the start of a sweep up.

e. Set the digital voltmeter delay to .001 (seconds). Adjust the dc power supply for a digital voltmeter reading of −1.600 V. Record the digital voltmeter reading on the Performance Test Record under "X Drive Ramp Measurement, (10%), y_1." This is the 10% point on the X Drive ramp. See Figure 4-13.

f. Measure the voltage at each 10% segment point by setting the digital voltmeter delay to the following. Enter on the Performance Test Record in the appropriate spaces under "X Drive Ramp Measurement".

Delay	Percent of Ramp
.002	20
.003	30
.004	40
.005	50
.006	60
.007	70
.008	80
.009	90

g. Algebraically add the voltages recorded in the "X Drive Ramp Measurement" column and enter the total in the "Σy" space.

h. Multiply Σy by 45 (which is Σx) and enter the result in the "ΣxΣy" space.

i. Multiply each y value by the corresponding x value and enter in the "x times y" column. Total these values and enter in the "Σxy" space.

j. The equation for determining the "best fit straight line" specification for each y value is:

$$y = a_1x + a_0$$

Where: a_1 and a_0 are constants to be calculated from data taken previously.

NOTE

Calculate the values of a_1 and a_0 to at least five decimal places.

k. First determine the value of a_1 using the following equation:

$$a_1 = \frac{\Sigma xy - \frac{\Sigma x \Sigma y}{n}}{\Sigma x^2 - \frac{(\Sigma x)^2}{n}}$$

Where: Σx, Σy, Σxy, ΣxΣy, Σz^2, and $(\Sigma x)^2$ are the previously calculated values entered on the Performance Test Record.

n = 9 (the number of points to be calculated)

l. Determine the value of a_0 using the equation:

$$a_0 = \frac{\Sigma y}{n} - a_1 \frac{\Sigma x}{n}$$

m. Calculate the "Best Fit Straight Line" value for each point (y_1 through y_9) using the equation:

$$y = a_1x + a_0$$

Enter each result on the Performance Test Record in the "Best Fit Straight Line" column.

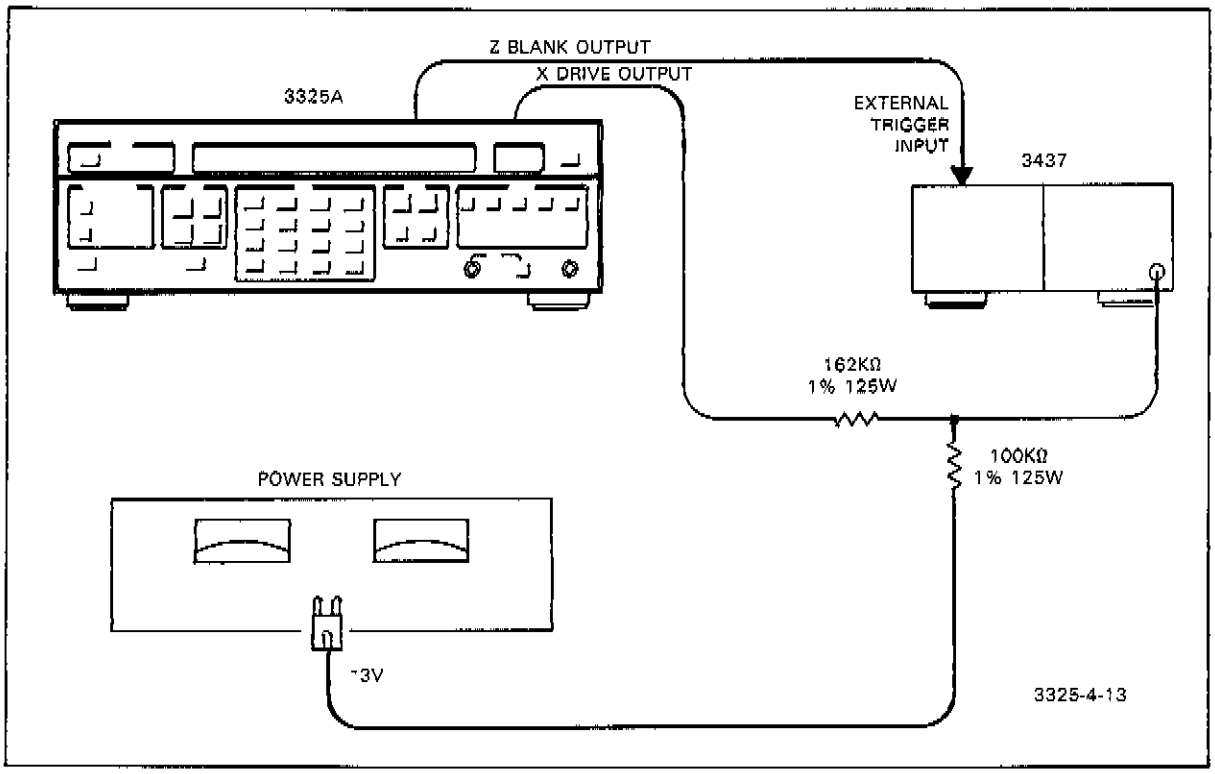

Figure 4-12. X Drive Linearity Test.

n. Determine the minimum and maximum allowable voltages at each point by subtracting and adding 0.004 V to the voltages calculated in Step m (10.5 V ÷ 2.6 x 0.1%). Enter these voltage limits on the Performance Test Record under "Minimum" and "Maximum". The voltages measured and recorded in the "X Drive Ramp Measurement" column should be within these calculated tolerances.

NOTE

The 3325A X Drive maximum voltage (100%) is set at the factory to +10.5 V..

4-69. Ramp Period Variation.

4-70. This procedure tests the variation between alternate cycles of the positive and negative slope ramps to the specification in Table 1-1: < ±1% of period, maximum.

Equipment Required: Oscilloscope, with delayed sweep (-hp- Model 1740A)

a. Connect 3325A signal output to the oscilloscope vertical input. (Do NOT use a 10:1 probe.) If the oscilloscope is an -hp- Model 1740A, set the input switch to the 50-ohm position. If your oscilloscope doesnot have a 50-ohm input, use a 50-ohm load (-hp- Model 11048C 50-ohm Feedthru Termination) at the input.

b. Set the 3325A as follows:

Function.....Negative Slope Ramp
Frequency.....100 Hz
Amplitude.....10 V p-p

c. Set the oscilloscope as follows:

Vertical.....2 V/div
Main sweep.....2.0 ms/div
Delayed sweep.....20 μs/div
Trigger.....Positive

d. With oscilloscope horizontal controls set to main sweep, adjust the intensified portion of the trace to the reset (positive going) portion of the ramp.

e. Set the horizontal controls to delayed sweep and position the ramp reset portion near the center of the display.

f. The reset portion should show more than one line, as in Figure 4-14. The lines should not be separated by more than ten divisions on the display.

g. Change the 3325A function to positive slope ramp and set oscilloscope trigger to negative to verify the positive ramp.

h. Bump the 3325A frequency to 99.999999 Hz to check the low frequency ramps. Verify that ramp period variations do not exceed ten divisions.

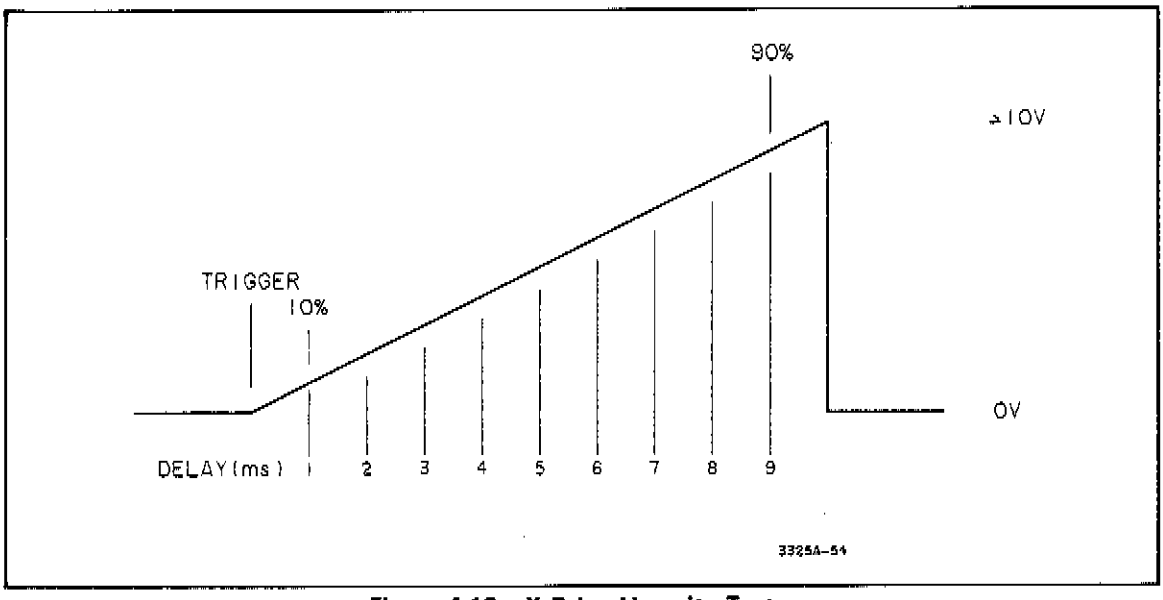

Figure 4-13. X Drive Linearity Test.

4-71. HP-IB Interface Test.

4-72. The following calculator program tests the operation of the 3325A HP-IB interface circuits. The program is written for an -hp- Model 9825A calculator but may be adapted for other controllers. The program is printed on a foldout page for your convenience.

Equipment Required:
-hp- Model 9825A Calculator equipped with:
98034A HP-IB Interface (set the select code 7)
Any combination of ROM's that includes a General I/O ROM and an Extended I/O ROM

a. Connect the calculator interface cable to the 3325A rear panel HP-IB connector. It is recommended that no other equipment be connected to this HP-IB during this test.

b. Enter the program into the calculator.

c. Press RUN. Tests 4 through 7 in this program require the operator to press CONTINUE if the test passes, or 1 CONTINUE if the test fails. If the Test 4 question (SRQ LIGHT ON?, 1 = NO) does not appear in the calculator display within 30 seconds after start of the program (RUN), the 3325A and calculator are not interfacing properly. The calculator may display an error indication that will identify the problem. If not, the 3325A HP-IB circuits are probably not operating correctly.

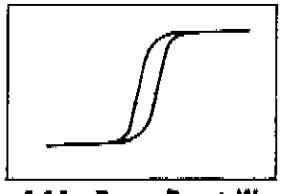

Figure 4-14. Ramp Reset Waveform.

Instrument Returns To Known Conditions After Self Test

Test 1 - Did Frequency Go To 1000 Hz?

Test 2 - Interrogate Frequency

Test 3 - Interrogate Amplitude

Test 4 - Test SRQ Circuits

Test 5 - Test Talk Circuits

Test 6 - Test Listen Circuits

Test 7 - Test Remote Circuits

PROGRAM FLOWCHART

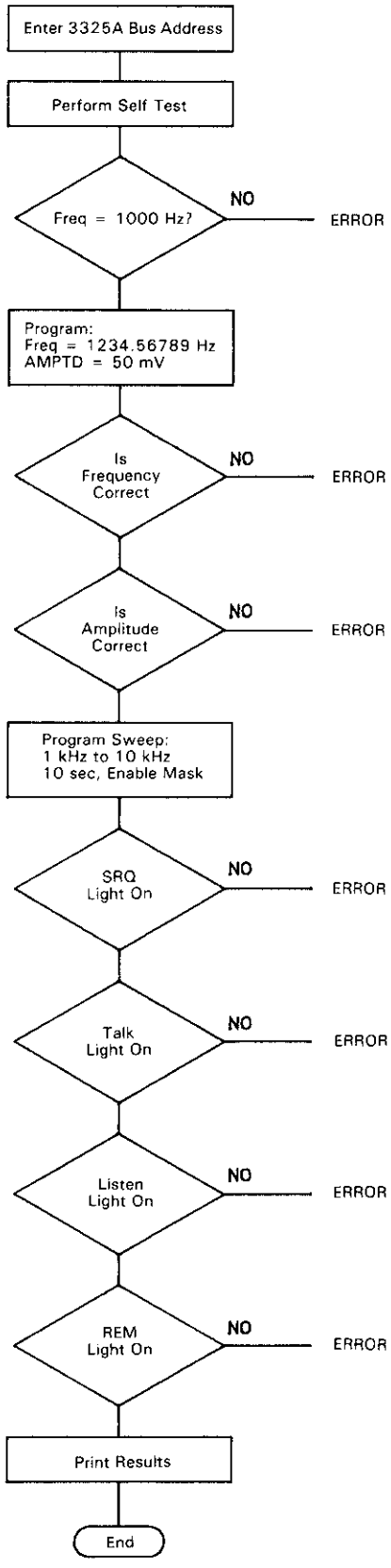

```
0: fmt ;csv;0→r1→r2→r3→r4→r5→r6→r7
1: prt "****************"
2: prt "3325A"
3: prt "HP-IB TEST"
4: prt "*************"
5: beep;ent "3325A BUS ADDRESS?,cont=717",A
6: if flg13;717→A
7: clr A ——————————————————————— Clear the 3325A to Turn-on State
8: rem 7 ——————————————————————— Set HP-IB Remote Enable (Select Code 7)
9:
10: "TEST 1":
11: wrt A,"TE" ——————————————————— Perform Self Test
12: wrt A,"IFR" ——————————————————— Interrogate Frequency
13: red A,F ——————————————————————— Read 3325A Frequency
14: if F#1000;1→r1 ——————————————— Compare Frequency to 1000 Hz
15:
16: "TEST 2,3 SETUP":
17: wrt A,"FR1234.567890HZ AM50MV" ——— Set Freq to 1234.567890 Hz, Amptd to 50mV
18: wrt A,"SR3" ——————————————— Store Settings in Register 3
19: clr A ——————————————————— Clear the 3325A
20: wrt A,"RE3" ——————————————— Recall Settings in Register 3
21:
22: "TEST 2":
23: wrt A,"IFR" ——————————————————— Interrogate Frequency
24: red A,G ——————————————————————— Read Frequency
25: if G#1234.56789;1→r2 ——————————— Compare to Frequency Stored
26:
27: "TEST3":
28: wrt A,"IAM" ——————————————————— Interrogate Amplitude
29: red A,H ——————————————————————— Read Amplitude
30: if H#.05;1→r3 ——————————————— Compare to Amplitude Stored
31:
32: "TEST 4":
33: wrt A,"ST1KH SP10KH SM1 TI10SE MSF SSSS" Lin Sweep 1—10kHz, Enable SRQ Mask
34: cli 7;lcl 7 ——————————————— Clear Interface, Interface to Local
35: beep;ent "SRQ LIGHT ON?,1=NO",r4 ——— Did 3325A Initiate SRQ?
36:
37: "TEST 5":
38: rds(A)→S ——————————————————— Read Status into Variable 5
39: rem 7 ——————————————————————— Set Remote Enable
40: red A,S ——————————————————— Read from the 3325A
41: beep;ent "TALK LIGHT ON?,1=NO",r5 ——— Did 3325A respond to Talk Command?
42:
43: "TEST6":
44: wrt A;lcl 7 ——————————————— Write to the 3325A, Interface to Local
45: beep;ent "LISTEN LIGHT ON?,1=NO",r6 —— Did 3325A respond to Listen Command?
46:
47: "TEST 7":                                  Remote Interface, Write to 3325A,
48: rem 7;wrt A;cli 7 ——————————————— Clear Interface
49: beep;ent "REMOTE LIGHT ON:,1=NO",r7 ——— Did the 3325A Respond to Remote?
50:
```

```
51: spc ;prt "**************"
52: prt "TEST RESULTS:"
53: spc ;1→I;fxd 0
54: if rI=0;prt "TEST",I,"      PASS"
55: if rI=1;prt "TEST",I,"           FAIL"
56: if (I+1→I)<=7;jmp -2
57: prt "****************";spc 3
58: ent "Repeat test?,1=Yes",C;if C=1;gto 0
59: end
*24386
```

Print Results of Tests

Self Contained Program may be Linked or Used as a Subroutine

Variables used in this Test Program:

A	Address of 3325A (defaults to 717)
F	Frequency read from 3325A in test #1
G	Frequency read from 3325A in test #2
H	Amplitude read from 3325A in test #3
I	Counter used to print test results
r1-r7	Test results (0 = Pass, 1 = Fail)
S	Status read from 3325A in test #5

Samples of Program Printouts:

```
****************
3325A
HP-IB TEST
**************

**************
TEST RESULTS:

TEST              1
     PASS
TEST              2
     PASS
TEST              3
     PASS
TEST              4
          FAIL
TEST              5
     PASS
TEST              6
     PASS
TEST              7
     PASS
****************
```

```
****************
3325A
HP-IB TEST
**************

**************
TEST RESULTS:

TEST              1
     PASS
TEST              2
     PASS
TEST              3
     PASS
TEST              4
     PASS
TEST              5
     PASS
TEST              6
     PASS
TEST              7
     PASS
****************
```

OPERATIONAL VERIFICATION RECORD

Hewlett-Packard
Model 3325A
Synthesizer/Function Generator
Serial No. _____

Tested by _____

Date _____

Par. 4-10	Self Test	Passed _____
Par. 4-12	Sine Wave Verification	
Step d	20 MHz: Frequency and Amplitude	Passed _____
Step g	Signal Purity	Passed _____
	High Voltage Output (1 MHz)	Passed _____
Par. 4-14	Square Wave Verification	
Step c	Frequency and Amplitude	Passed _____
Steps d & e	Abberations	Passed _____
Step f	Rise Time	Passed _____
Par. 4-16	Triangle and Ramp Verification	
Step c	Triangle Freq. and Amptd.	Passed _____
Step d	+ Ramp Freq. and Amptd.	Passed _____
Step e	− Ramp Freq. and Amptd.	Passed _____
Step f	− Ramp Retrace Time	Passed _____
Step g	+ Ramp Retrace Time	Passed _____
Step i	Triangle Linearity	Passed _____
Par. 4-18	Amplitude Flatness	Passed _____

			Spec
Par. 4-20	Sync Output Check	High _____	> +1.2 V
		Low _____	< 0.2 V

			Spec.
Par. 4-22	Frequency Accuracy		
Step c	Sine, 20 MHz	_____	± 100 Hz
Step d	Square, 10 MHz	_____	± 50 Hz
Step e	Triangle, 10 kHz (100,000 ns)	_____	± .5 ns
Step f	Ramp, 10 kHz (100,000 ns)	_____	± .5 ns

Operational Verification

Par. 4-24 Output Level and Attenuator Check

(DC Offset Only)

Entry	Min.		Max.
−5 V	−4.980 V	_____	−5.020 V
(+)5 V	+4.980 V	_____	+5.020 V
* (±) 1.499V	(±) 1.49300V	_____	(±) 1.50499V
499.9 mV	+0.49790 V	_____	+0.50190 V
149.9 mV	+0.14930 V	_____	+0.15050 V
49.99 mV	+0.04979 V	_____	+0.05019 V
14.99 mV	+0.01493 V	_____	+0.01505 V
4.999 mV	+0.04979 V	_____	+0.005019 V
1.499 mV	+0.001479 V	_____	+0.001519 V

* All entries and limits are ±

High Voltage Output (Option 002)

20 V	+19.775 V	_____	+20.225 V
−20 V	−19.775 V	_____	−20.225 V

Par. 4-26 Harmonic Distortion

	All Harmonics Below:
20 MHz	_____ −25 dB
15 MHz	_____ −30 dB
2 MHz	_____ −40 dB
200 kHz	_____ −60 dB
50 kHz	_____ −65 dB
10 kHz	_____ −65 dB
1 kHz	_____ −65 dB
100 Hz	_____ −65 dB

High Voltage Output (Option 002)

100 Hz	_____ −65 dB
10 kHz	_____ −65 dB
200 kHz	_____ −60 dB
1 MHz	_____ −40 dB

Par. 4-28 Close-In Spurious Signal Test Passed _____

Par. 4-30 HP-IB Check Passed _____

PERFORMANCE TEST RECORD

Hewlett-Packard
Model 3325A
Synthesizer/Function Generator
Serial No._____

Tested By_____

Date_____

Par. 4-37 Harmonic Distortion

Fundamental Frequency	Specification
20 MHz	_____ – 25 dB
15 MHz	_____ – 30 dB
2 MHz	_____ – 40 dB
200 kHz	_____ – 60 dB
50 kHz	_____ – 65 dB
10 kHz	_____ – 65 dB
1 kHz	_____ – 65 dB
100 Hz	_____ – 65 dB

High Voltage Output (Option 002)

100 Hz	_____ – 65 dB
10 kHz	_____ – 65 dB
200 kHz	_____ – 60 dB
1 MHz	_____ – 40 dB

Par. 4-39 Spurious Signal Tests

Mixer Spurious Test (2:1 spur/3:2 spur) _____ – 70 dB

	2:1 spur	3:2 spur	
4.100MHz	____	____	– 70dB
6.100MHz	____	____	– 70dB
8.100MHz	____	____	– 70dB
10.100MHz	____	____	– 70dB
12.100MHz	____	____	– 70dB
14.100MHz	____	____	– 70dB
16.100MHz	____	____	– 70dB
18.100MHz	____	____	– 70dB
20.100MHz	____	____	– 70dB

Close-in Spurious Test

5.0001MHz	_____ – 70dB
5.00001MHz	_____ – 70dB
5.000001MHz	_____ – 70dB
20.001MHz	_____ – 70dB
	_____ – 70dB
	_____ – 70dB
	_____ – 70dB

Par. 4-41 Integrated Phase Noise

19.901 MHz _____ – 60 dB

Par. 4-43 Amplitude Modulation Envelope Distortion _____ – 30 dB

Par. 4-45 Square Wave

Rise Time _____ < 20 ns

Fall Time _____ < 20 ns

Overshoot, Positive Peak _____ < 500 mV

Overshoot, Negative Peak _____ < 500 mV

Par. 4-47 Ramp Retrace Time

\+ Ramp _____ < 3 μs

– Ramp _____ < 3 μs

Par. 4-49 Sync Output

V_{high} _____ > +1.2 V

V_{low} _____ < +0.2 V

Par. 4-51 Square Wave Symmetry _____ > 3.2 ns

Par. 4-53 Frequency Accuracy

Sine, 20 MHz _____ ± 100 Hz

Square, 10 MHz _____ ± 50 Hz

Triangle, 10 kHz (100,000 ns) _____ ± .5 ns

Ramp, 10 kHz (100,000 ns) _____ ± .5 ns

Par. 4-55 Phase Increment Accuracy

	Minimum	Time Difference	Maximum
Zero Phase Time Interval _____			
1° Increment Time Interval _____	22.22 ns	_____	33.34 ns
10° Increment Time Interval _____	272.22 ns	_____	283.34 ns
100° Increment Time Interval _____	2772.22 ns	_____	2783.34 ns

Par. 4-57 Phase Modulation Linearity

	DVM Reading		Phase Difference		Cumulative Phase	x times y	x^2
x_1	_____	1	0	y_1	0	0	_____
x_2	_____	2	_____	y_2	_____	_____	_____
x_3	_____	3	_____	y_3	_____	_____	_____
x_4	_____	4	_____	y_4	_____	_____	_____
x_5	_____	5	_____	y_5	_____	_____	_____
x_6	_____	6	_____	y_6	_____	_____	_____
x_7	_____	7	_____	y_7	_____	_____	_____
x_8	_____	8	_____	y_8	_____	_____	_____
x_9	_____	9	_____	y_9	_____	_____	_____
x_{10}	_____	10	_____	y_{10}	_____	_____	_____
x_{11}	_____	11	_____	y_{11}	_____	_____	_____
Σx	_____			Σy	_____	Σxy _____	Σx^2 _____
$(\Sigma x)^2$	_____			$\Sigma x \Sigma y$	_____		

Best Fit Straight Line Phase	Minimum Limit	Measured Cumulative Phase	Maximum Limit
(y_1)		y_1 0	
(y_2)		y_2	
(y_3)		y_3	
(y_4)		y_4	
(y_5)		y_5	
(y_6)		y_6	
(y_7)		y_7	
(y_8)		y_8	
(y_9)		y_9	
(y_{10})		y_{10}	
(y_{11})		y_{11}	

Specification: ±0.5% of (y_{11}) = ±_____°

Par 4-59 Amplitude Accuracy

Entry	Minimum	Measured	Maximum
Sine Wave Test			
Amplitude: 3.536 Vrms			
Sine, 100 Hz	3.495 V		3.577 V
Sine, 1 kHz	3.495 V		3.577 V
Sine, 100 kHz	3.495 V		3.577 V
Amplitude: 1.061 Vrms			
Sine, 100 Hz	1.048 V		1.073 V
Sine, 1 kHz	1048 V		1.073 V
Sine, 100 kHz	1.048 V		1.073 V
Amplitude: 0.3536 Vrms			
DC, 1 mV			
Sine, 100 Hz	0.3411 V		0.3660 V
Sine, 1 kHz	0.3411 V		0.3660 V
Sine, 100 Hz	0.3411 V		0.3660 V
Function Test			
Amplitude:10 Vpp			
Square, 99.9 Hz	3.661V		3.735V
Triangle, 99.9 Hz	3.643V		3.754V
Pos Ramp, 99.9 Hz	3.643V		3.754V
Neg Ramp, 99.9 Hz	3.643V		3.754V
Square, 1 kHz	3.661V		3.735V

Triangle, 2 kHz	3.643V	_____	3.754V
Pos Ramp, 500 Hz	3.643V	_____	3.754V
Neg Ramp, 500 Hz	3.643V	_____	3.754V
Square, 100 kHz	3.661V	_____	3.735V
Triangle, 10 kHz	3.513V	_____	3.883V
Pos Ramp, 10 kHz	3.328V	_____	3.996V
Neg Ramp, 10 kHz	3.328V	_____	3.996V

Amplitude: 3 Vpp

Square, 99.9 Hz	2.970 V	_____	3.030 V
Triangle, 99.9 Hz	2.955 V	_____	3.045 V
Pos Ramp, 99.9 Hz	2.955 V	_____	3.045 V
Neg Ramp, 99.9 Hz	2.955 V	_____	3.045 V
Square, 1 kHz	2.970 V	_____	3.030 V
Triangle, 2 kHz	2.955 V	_____	3.045 V
Pos Ramp, 500 Hz	2.955 V	_____	3.045 V
Neg Ramp, 500 Hz	2.955 V	_____	3.045 V
Square, 100 kHz	2.970 V	_____	3.030 V
Triangle, 10 kHz	2.850 V	_____	3.150 V
Pos Ramp, 10 kHz	2.700 V	_____	3.300 V
Neg Ramp, 10 kHz	2.700 V	_____	3.300 V

Amplitude: 1 Vpp
DC: 1 mV

Square, 99.9 Hz	0.970 V	_____	1.030 V
Triangle, 99.9 Hz	0.960 V	_____	1.040 V
Pos Ramp, 99.9 Hz	0.960 V	_____	1.040 V
Neg Ramp, 99.9 Hz	0.960 V	_____	1.040 V
Square, 1 kHz	0.970 V	_____	1.030 V
Triangle, 2 kHz	0.960 V	_____	1.040 V
Pos Ramp, 500 Hz	0.960 V	_____	1.040 V
Neg Ramp, 500 Hz	0.960 V	_____	1.040 V
Square, 100 kHz	0.970 V	_____	1.030 V
Triangle, 10 kHz	0.940 V	_____	1.060 V
Pos Ramp, 10 kHz	0.890 V	_____	1.110 V
Neg Ramp, 10 kHz	0.890 V	_____	1.110 V

High Voltage (Option 002) Sinewave Test

Amplitude: 14.14 Vrms

Sine, 2 kHz	13.86 V	_____	14.42 V

High Voltage (Option 002) Function Test

Amplitude: 40 Vpp

Square, 2 kHz	3.466V	_____	3.607V
Triangle, 2 kHz	3.466V	_____	3.607V
Pos Ramp, 2 kHz	3.466V	_____	3.607V
Neg Ramp, 2 kHz	3.466V	_____	3.607V

Amplitude Flatness

Sine, 3 Vpp, 1 kHz (Reference)		_____	= Y
Allowable tolerance (± 6.6%)	_____ (0.934Y)		_____ (1.066Y)
2.001 MHz		_____	
4.001 MHz		_____	
6.001 MHz		_____	
8.001 MHz		_____	
10.001 MHz		_____	
12.001 MHz		_____	
14.001 MHz		_____	
16.001 MHz		_____	
18.001 MHz		_____	
20.001 MHz		_____	
Sine, 10 Vpp, 1 kHz (Reference)		_____	= Y
Allowable tolerance (± 6.3%)	_____ (0.937Y)		_____ (1.063Y)
2.001 MHz		_____	
4.001 MHz		_____	
6.001 MHz		_____	
8.001 MHz		_____	
10.001 MHz		_____	
12.001 MHz		_____	
14.001 MHz		_____	
16.001 MHz		_____	
18.001 MHz		_____	
20.001 MHz		_____	

Square, 10 Vpp, _____ Pass (check one) _____ Fail

High Voltage (Option 002) Flatness

Sine, 40 Vpp, _____ Pass (check one) _____ Fail

Par. 4-61 DC Offset Accuracy (DC Only)

Entry	Minimum	Maximum
5 V	+4.980 V	+5.020 V
−5 V	−4.980 V	−5.020 V
−1.499 V	−1.49300 V	−1.50499 V
1.499 V	+1.49300 V	+1.50499 V
499.9 mV	+0.49790 V	0.50190 V
−499.9 mV	−0.49790 V	−0.50190 V
−149.9 mV	−0.14930 V	−0.15050 V
149.9 mV	+0.14930 V	+0.15050 V
49.99 mV	+0.04979 V	+0.05019 V
−49.9 mV	−0.04979 V	−0.05019 V
−14.99 mV	−0.01493 V	−0.01505 V
14.99 mV	+0.01493 V	+0.01505 V
4.999 mV	+0.004979 V	+0.005019 V
−4.999 mV	−0.004979 V	−0.005019 V
−1.499 mV	−0.001479 V	−0.001519 V
1.499 mV	+0.001479 V	+0.001519 V

High Voltage Output Option 002

20 V	+19.775 V	+20.225 V
−20 V	−19.775 V	−20.225 V

Par. 4-63 DC Offset Accuracy with AC Functions

Sine 20.999 999 999 MHz	Minimum	Maximum
4.5 V	+4.350 V	+4.650 V
−4.5 V	−4.350 V	−4.650 V
Sine 999.9 kHz		
−4.5 V	−4.440 V	−4.560 V
4.5 V	+4.440 V	+4.560 V
Square 999.9 kHz		
4.5 V	+4.440 V	+4.560 V
−4.5 V	−4.440 V	−4.560 V
Square 9.9999 MHz		
−4.5 V	−4.350 V	−4.650 V

Triangle 9.9 kHz

– 4.5 V	– 4.440 V_____	– 4.560 V

Ramp 9.9 kHz

– 4.5 V	– 4.380 V_____	– 4.620 V

Par. 4-65. Triangle Linearity

x Values	Positive Slope Measurement	x times y	Calculated Best Fit Straight Line	Tolerances Minimum	Tolerances Maximum
$x_1 = 1$	(10%) y_1_____	_____	(y_1)_____	_____	_____
$x_2 = 2$	(20%) y_2_____	_____	(y_2)_____	_____	_____
$x_3 = 3$	(30%) y_3_____	_____	(y_3)_____	_____	_____
$x_4 = 4$	(40%) y_4_____	_____	(y_4)_____	_____	_____
$x_5 = 5$	(50%) y_5_____	_____	(y_5)_____	_____	_____
$x_6 = 6$	(60%) y_6_____	_____	(y_6)_____	_____	_____
$x_7 = 7$	(70%) y_7_____	_____	(y_7)_____	_____	_____
$x_8 = 8$	(80%) y_8_____	_____	(y_8)_____	_____	_____
$x_9 = 9$	(90%) y_9_____	_____	(y_9)_____	_____	_____
$\Sigma x = 45$	Σy_____	Σxy ____			
$(\Sigma x)^2 = 2025$	$\Sigma x \Sigma y$ _____				
$\Sigma x^2 = 285$					

Par. 4-65. Triangle Linearity (Con'd)

Par. 4-65. Triangle Linearity

x Values	Negative Slope Measurement	x times y	Calculated Best Fit Straight Line	Tolerances Minimum	Tolerances Maximum
$x_9 = 9$	(90%) y_9_____	_____	(y_9)_____	_____	_____
$x_8 = 8$	(80%) y_8_____	_____	(y_8)_____	_____	_____
$x_7 = 7$	(70%) y_7_____	_____	(y_7)_____	_____	_____
$x_6 = 6$	(60%) y_6_____	_____	(y_6)_____	_____	_____
$x_5 = 5$	(50%) y_5_____	_____	(y_5)_____	_____	_____
$x_4 = 4$	(40%) y_4_____	_____	(y_4)_____	_____	_____
$x_3 = 3$	(30%) y_3_____	_____	(y_3)_____	_____	_____
$x_2 = 2$	(20%) y_2_____	_____	(y_2)_____	_____	_____
$x_1 = 1$	(10%) y_1_____	_____	(y_1)_____	_____	_____
$\Sigma z = 45$	Σy_____	Σxy ____			
$(\Sigma x)^2 = 2025$	$\Sigma x \Sigma y$ _____				
$\Sigma x^2 = 285$					

Par. 4-67. x Drive Linearity

x Values	Positive Slope Measurement	x times y	Calculated Best Fit Straight Line	Tolerances Minimum	Tolerances Maximum
$x_1 = 1$	(10%) y_1		(y_1)		
$x_2 = 2$	(20%) y_2		(y_2)		
$x_3 = 3$	(30%) y_3		(y_3)		
$x_4 = 4$	(40%) y_4		(y_4)		
$x_5 = 5$	(50%) y_5		(y_5)		
$x_6 = 6$	(60%) y_6		(y_6)		
$x_7 = 7$	(70%) y_7		(y_7)		
$x_8 = 8$	(80%) y_8		(y_8)		
$x_9 = 9$	(90%) y_9		(y_9)		
$\Sigma z = 45$	Σy	Σxy			
$(\Sigma x)^2 = 2025$	$\Sigma x \Sigma y$				
$\Sigma x^2 = 285$					

Par. 4-69 Ramp Period Variation

Negative Slope Ramp, 100 Hz _____ < ± 100 μs

Positive Slope Ramp, 100 Hz _____ < ± 100 μs

Positive Slope Ramp, 99.9 Hz _____ < ± 100 μs

Par. 4-71. HP-IB Interface

	Pass	Fail	or Attach Calculator Tape
Test 1			
Test 2			
Test 3			
Test 4			
Test 5			
Test 6			
Test 7			

WARNING

Maintenance described herein is performed with power supplied to the instrument, and protective covers removed. Such maintenance should be performed only by service-trained personnel who are aware of the hazards involved (for example, fire and electrical shock). Where maintenance can be performed without power applied, the power should be removed.

SECTION V
ADJUSTMENTS

5-1. INTRODUCTION.

5-2. This section contains the procedures required to adjust the 3325A to meet its specifications in Table 1-1. These adjustments should be used following repairs or if performance tests indicate a deficiency.

Paragraph	Adjustment
5-7	Power Supply
5-8	D/A Converter Offset
5-9	Voltage Controlled Oscillator Frequency
5-10	Analog Phase Interpolation (API)
5-11	30 MHz Reference Oscillator
5-12	Option 001 High Stability Frequency Reference
5-13	Sinewave Amplitude Calibration
5-14	X Drive
5-15	Amplifier Bias
5-16	Ramp Stability
5-17	Amplitude Flatness
5-18	Mixer Spurious Signal

Table 5-1. Test Equipment Required for Adjustments

Equipment	Critical Specifications	Recommended Model
AC/DC Digital Voltmeter	AC Function: 1 V Range Accuracy: ±.5% Resolution: 4 digits DC Function: Ranges: .1 V, 1 V, 10 V, 100 V Accuracy: ±.2% Resolution: 4½ digits	-hp-3455A/3466A
Low Frequency Spectrum Analyzer	Frequency Range: 1 kHz – 50 kHz Amplitude Accuracy: ±0.5 dB Spurious Responses: 80 dB below ref.	-hp-3580A/3585A
Resistor	1 kΩ	-hp- Part No. 0683-1025
Electronic Counter	Frequency measurement: to 20 MHz Accuracy: ±2 counts Resolution: 8 digits	-hp-5328A with Opt. 040 or 041
Oscilloscope	Vertical: 2 channel Bandwidth: dc to 100 MHz Deflection: 5 mV to 10 V/div Horizontal: Main and Delayed Sweeps Main: 50 ns to 2 s/div Delayed: 50 ns to 20 ms/div	-hp-1740A
Frequency Standard (for Option 001 only)	Frequency: 5 MHz Accuracy: 1×10^{-9}	-hp-105B
10:1 Oscilloscope Probe	Impedance: 1 MΩ, 12 pF	-hp-10041A
DC Power Supply	Volts: 0 - 10 V Amps: 10 mA	-hp-6214A
Oscillator	Frequency: 1 kHz Amplitude: 1 Vrms	-hp-204C
High Frequency Spectrum Analyzer	Frequency Range: 1 kHz - 80 MHz Amplitude Accuracy: ±.5 dB	-hp-141T/8552B/8553B/8566A/8568A
Thermal Converter	Input Impedance: 50Ω, Input Voltage: 1Vrms, Frequency: 1kHz to 20MHz, Frequency Response: ±0.05dB	-hp-11050A
Resistor	200Ω 1% 1/8W	-hp- 0757-0407
Resistor	50Ω 1% 0.5W	-hp- 0698-5965
Resistor	13Ω 1% 1/8W	-hp- 0757-0380
Resistor	25Ω 5% 1/4W	-hp- 0683-2505
Resistor	150Ω 1% 1/8W	-hp- 0757-0284

Table 6-1. List of Abbreviations.

ABBREVIATIONS

Ag	silver	Hz	hertz (cycle(s) per second)	NPO	negative positive zero (zero temperature coefficient)	sl	slide
Al	aluminum					SPDT	single-pole double-throw
A	ampere(s)	ID	inside diameter	ns	nanosecond(s) = 10^{-9} seconds	SPST	single-pole single-throw
Au	gold	impg	impregnated	nsr	not separately replaceable		
		incd	incandescent			Ta	tantalum
C	capacitor	ins	insulation(ed)	Ω	ohm(s)	TC	temperature coefficient
cer	ceramic			obd	order by description	TiO_2	titanium dioxide
coef	coefficient	kΩ	kilohm(s) = 10^{+3} ohms	OD	outside diameter	tog	toggle
com	common	kHz	kilohertz = 10^{+3} hertz			tol	tolerance
comp	composition			p	peak	trim	trimmer
conn	connection	L	inductor	pA	picoampere(s)	TSTR	transistor
		lin	linear taper	pc	printed circuit		
dep	deposited	log	logarithmic taper	pF	picofarad(s) 10^{-12} farads	V	volt(s)
DPDT	double-pole double-throw			piv	peak inverse voltage	vacw	alternating current working voltage
DPST	double-pole single-throw	mA	milliampere(s) = 10^{-3} amperes	p/o	part of	var	variable
		MHz	megahertz = 10^{+6} hertz	pos	position(s)	vdcw	direct current working voltage
elect	electrolytic	MΩ	megohm(s) = 10^{+6} ohms	poly	polystyrene		
encap	encapsulated	met film	metal film	pot	potentiometer	W	watt(s)
		mfr	manufacturer	p-p	peak-to-peak	w/	with
F	farad(s)	ms	millisecond	ppm	parts per million	wiv	working inverse voltage
FET	field effect transistor	mtg	mounting	prec	precision (temperature coeffient, long term stability and/or tolerance)	w/o	without
fxd	fixed	mV	millivolt(s) = 10^{-3} volts			ww	wirewound
		μF	microfarad(s)				
GaAs	gallium arsenide	μs	microsecond(s)	R	resistor		
GHz	gigahertz = 10^{+9} hertz	μV	microvolt(s) = 10^{-6} volts	Rh	rhodium		
gd	guard(ed)	my	Mylar®	rms	root-mean-square	*	optimum value selected at factory, average value shown (part may be omitted)
Ge	germanium			rot	rotary	**	no standard type number assigned selected or special type
gnd	ground(ed)	nA	nanoampere(s) = 10^{-9} amperes				
		NC	normally closed	Se	selenium		
H	henry(ies)	Ne	neon	sect	section(s)		
Hg	mercury	NO	normally open	Si	silicon	®	Dupont de Nemours

DESIGNATORS

A	assembly	FL	filter	Q	transistor	TS	terminal strip
B	motor	HR	heater	QCR	transistor-diode	U	microcircuit
BT	battery	IC	integrated circuit	R	resistor	V	vacuum tube, neon bulb,photocell, etc.
C	capacitor	J	jack	RT	thermistor	W	cable
CR	diode	K	relay	S	switch	X	socket
DL	delay line	L	inductor	T	transformer	XDS	lampholder
DS	lamp	M	meter	TB	terminal board	XF	fuseholder
E	misc electronic part	MP	mechanical part	TC	thermocouple	Y	crystal
F	fuse	P	plug	TP	test point	Z	network

Table 6-2. List of Manufacturers.

Mfr. No.	Manufacturer Name	Address
S0545	Nippon Electric Co.	Tokyo, JP
00000	Any Satisfactory Supplier	
00494	Addressograph Multigraph Corp.	Cleveland, OH 44117
01121	Allen-Bradley Co.	Milwaukee, WI 53204
01295	Texas Instr Inc. Semicond Cmpnt Div.	Dallas, TX 75222
03888	KDI Pyrofilm Corp.	Whippany, NJ 07981
04713	Motorola Semiconductor Products	Phoenix, AZ 85008
06383	Panduit Corp.	Tinley Park, IL 60477
07263	Fairchild Semiconductor Div.	Mountain View, CA 94042
13606	Sprague Elect Co. Semiconductor Div.	Concord, NH 03301
18324	Signetics Corp.	Sunnyvale, CA 94086
19701	Mepco/Electra Corp.	Mineral Wells, TX 76067
24546	Corning Glass Works (Bradford)	Bradford, PA 16701
26654	Varadyne Inc.	Santa Monica, CA 94040
27014	National Semiconductor Corp.	Santa Clara, CA 95051
28480	Hewlett-Packard Co. Corporate Hq.	Palo Alto, CA 94304
3L585	RCA Corp. Solid State Div.	Somerville, NJ
32293	Intersil Inc.	Cupertino, CA 95014
32997	Bourns Inc. Trimpot Prod Div.	Riverside, CA 92507
34335	Advanced Micro Devices Inc.	Sunnyvale, CA 94086
51642	Centre Engineering Inc.	State College, PA 16801
52763	Stettner Electronics Inc.	Chattanooga, TN 13035
55576	Synertek	Santa Clara, CA 95051
56289	Sprague Electric Co.	North Adams, MA 01247
72136	Electro Motive Corp.	Florence, SC 06226
74970	Johnson E F Co.	Waseca, MN 56093
75042	TRW Inc. Philadelphia Div.	Philadelphia, PA 19108
75915	Littelfuse Inc.	Des Plaines, IL 60016
84411	TRW Capacitor Div.	Ogallala, NE 69153
91637	Dale Electronics Inc.	Columbus, NE 68601

c. Set spectrum analyzer controls as follows:

Start Frequency	Ø kHz
Bandwidth	30 Hz
Frequency Span	1 kHz/div
Display Smoothing	Max
Sweep Time/Div	200 sec
Input Sensitivity	10 mV
Amplitude Reference	Normal
Amplitude Mode	10 dB/div
Sweep Mode	Manual

d. Adjust the spectrum analyzer manual vernier control to place the display marker at the peak of the API spur which appears at 3 kHz (3 display divisions).

e. Adjust the API 1 Adj (A21R76) to reduce the spur to a minimum.

f. Change 3325A frequency to 5 000 300 Hz.

g. Adjust API 2 Adj (A21R74) to again reduce the spur on the spectrum analyzer display to a minimum.

h. Change 3325A frequency to 5 000 003 Hz.

i. Adjust API 4 Adj (A21R88) to reduce the spur to a minimum.

j. Set the 3325A to 5.003MHz and readjust API 1 (A21R76) to its minimum value. Also check the harmonic distortion performance test (paragraph 4-38, steps e through h).

5-11. 30 MHz Reference Oscillator.

Equipment Required: electronic counter (-hp- Model 5328A)

NOTE

The instrument must have been ON for at least 20 minutes before performing this adjustment.

a. If the instrument has the Option 001 High Stability Frequency Reference installed, the rear panel connection from "10 MHz Oven Output" to "Ext Ref In" must be disconnected.

b. Connect an electronic counter to the 3325A signal output, using 50-ohm input termination.

c. Set the 3325A as follows:

Function	Sine
Frequency	20 MHz
Amplitude	10 Vp-p

d. Adjust the counter to measure frequency (20 MHz).

e. Adjust Ref (A3R30) for a counter display of 20:000 000 MHz.

5-12. Option 001 High Stability Frequency Reference.

Equipment Required:
Oscilloscope, 2 channel (-hp- Model 1740A)

Quartz Frequency Standard, 5 MHz (-hp- Model 105B)

NOTE

The rear panel "10 MHz Oven Output" must be connected to "Ext Ref In".

a. This procedure is for instruments with the Option 001 High Stability Frequency Reference. The instrument must have been connected to ac power (either in STBY or ON) for at least 30 minutes before attempting this adjustment.

b. Connect the frequency standard 5 MHz output to one vertical channel of the oscilloscope and trigger the sweep from this channel.

c. Set the 3325A as follows:

Function	Sine
Frequency	5 MHz
Amplitude	10 Vp-p

d. Connect the 3325A signal output to the second channel of the oscilloscope.

e. Adjust the Fine Adj (A9R7) to stop the 3325A signal on the oscilloscope display. (The frequency standard signal must be stationary, and the 3325A signal as near stationary as possible.)

f. If the Fine Adj (A9R7) does not have enough range, proceed with Step g.

g. Adjust the Fine Adj (A9R7) to mechanical center.

h. Remove the screw from the Coarse Frequency adjustment in the end of the temperature controlled oven assembly (A9E1).

i. Using a non-conductive tool, adjust the Coarse Adj. to stop the 3325A signal on the oscilloscope (as near stationary as possible).

j. Replace the screw in the oven assembly and repeat Step e.

5-13. Sinewave Amplitude Calibration. Δ4

Equipment Required:
Oscilloscope (-hp- Model 1740A)
10:1 Oscilloscope Probe (-hp- Model 10041A)
DC Power Supply (-hp- Model 6214A)
Oscillator (-hp- Model 204C)
AC digital voltmeter (-hp- Model 3466A)

a. Set the 3325A to STBY.

Δ4 - see Section VII for alternate procedure

CAUTION

Do not allow disconnected cable connectors to contact the printed circuit board or components, or circuits may be damaged.

b. Adjust the dc power supply output to +5 V and connect it between the AMPTD MOD input and ground.

c. Disconnect cable W23 at A3J23.

d. Measure the oscillator (-hp- 204C) output with the ac digital voltmeter and adjust the output level to approximately 1 V rms at a frequency of 1 kHz. Connect the oscillator output between the center contact of A3J23 and ground.

e. Set 3325A power switch to ON and set EXT MOD to AM ON.

f. Connect the oscilloscope through a 10:1 probe to A3TP4. Set oscilloscope input to ac coupled, sweep to 1 ms/div.

g. Adjust Y offset in (A3R60) to null out the sine wave signal on the display. (Change oscilloscope vertical gain as necessary to observe the signal.)

h. Ground the oscilloscope input and zero the trace on the center line. Set the input to dc coupled.

i. Adjust Offset Out (A3R68) to return the oscilloscope trace to the center line (Ø Vdc).

j. Set the 3325A to STBY. Disconnect the dc power supply and the oscillator, and reconnect cable W23 to A3J23

k. Turn 3325A to ON.

l. Connect an ac digital voltmeter to the 3325A signal output via a 50 ohm feedthru termination.

m. Set the 3325A to 1 kHz, Sine, 1 Vp-p, and 1 mV DC OFFSET. Press AMPTD CAL key.

n. Adjust Offset In (A3R33) for a voltmeter reading of .3536 Vrms ± .0040 Vrms.

o. Repeat Steps m and n until output voltage of .3536 Vrms does not change when AMPTD CAL key is pressed.

p. Set the DC OFFSET to 0 V. The output voltage should remain at .3536 Vrms ± .0040 Vrms.

q. Set the output voltage to 10 Vp-p. The output voltage should be 3.536 Vrms ± .040 Vrms.

r. If necessary, the adjustment of R60 may be compromised slightly to bring these two voltages into tolerance.

5-14. X Drive.

Equipment Required: dc digital voltmeter (-hp- Model 3466A)

a. Connect a dc digital voltmeter to 3325A rear panel X Drive output.

b. Set the 3325A as follows:

Function	Sine
Amplitude	10 Vp-p
Sweep Start Freq	1 MHz
Sweep Stop Freq	10 MHz
Sweep Marker Freq	5 MHz
Sweep Time	0.999 sec

c. Press RESET/START key to reset sweep to start conditions.

d. Digital voltmeter reading should be less than 20 mV.

e. Adjust X Drive (A14R6) to mechanical center.

f. Press RESET/START key once to initiate a single sweep. At the end of the sweep the digital voltmeter reading should be +10.450 to +10.550 V.

g. If the reading is less than +10.450V, adjust X Drive (A14R6) slightly clockwise; and if reading is greater than +10.550V, adjust X Drive slightly counterclockwise.

NOTE

The voltmeter reading will not respond to adjustment of X Drive (A14R6). The effect of this adjustment can be observed only after another single sweep. Following the end of a sweep, the X Drive output voltage will drift downward at ≤ 1mV per second.

h. Press RESET/START twice to initiate another sweep. If necessary, readjust X Drive (A14R6), turning clockwise to increase voltage and counterclockwise to decrease voltage.

i. Repeat Steps g and h until proper voltage (+10.450 to +10.550 V) is measured immediately following the end of a sweep.

5-15. Amplifier Bias Adjustment, Δ5

Equipment Required: High frequency spectrum analyzer (-hp- Model 141T/8552B/8553B/8566A/8568A)

a. With the 3325A in its turn-on condition, set the frequency to 10 MHz, function to square wave, and amplitude to .999 Vp-p.

Δ5 - see Section VII if necessary for alternate adjustment locations

b. Adjust the spectrum analyzer as follows:

Center Frequency.....50 MHz
Bandwidth.....300 kHz
Scan Width.....0-100 MHz
Input Attenuation.....40 dB
Video Filter.....10 kHz
Scan Time.....10 msec/div
Log Reference Level...+10dBm,10dBLOG
Vernier.....−5 dBm
Scan Mode.....INT
Scan Trigger.....AUTO

c. Connect the 3325A signal output to the spectrum analyzer input. Do not use a 50 Ω feed through termination.

d. The spectrum analyzer should display the high level odd harmonics and low level even harmonics of the 10 MHz square wave.

e. Adjust the bias, A14R275 to minimize the 20MHz second harmonic. It should dip sharply to > 34dB below the fundamental.

5-16. Ramp Stability.

Equipment Required: Oscilloscope, with delayed sweep (-hp- Model 1740A)

a. Connect 3325A signal output to the oscilloscope vertical input. (Do NOT use a 10:1 probe.) If the oscilloscope is an -hp- Model 1740A, set the input switch to the 50-ohm position. If your oscilloscope does not have a 50-ohm input, use a 50-ohm load (-hp- Model 11048C 50-ohm Feedthru Termination) at the input.

b. Set the 3325A as follows:

Function.....Positive Slope Ramp
Frequency.....100 Hz
Amplitude.....10 Vp-p

Remove the RMP test jumper

c. Set the oscilloscope as follows:

Vertical.....2V/div
Main Sweep.....2ms/div
Delayed Sweep.....20μS/div
Trigger.....Negative
Delay.....Mid Screen
Display.....A or B
(Do not use ALT or CHOP)

d. Set the oscilloscope to delayed sweep. Adjust the delay to see the ramp reset jitter and read the positive ramp jitter in microseconds.

e. Press the Negative Ramp function on the 3325A.

f. Change the trigger on the oscilloscope to positive and note the negative ramp jitter in microseconds.

g. Bump the 3325A frequency to 99.999999Hz and read the ramp jitter in microseconds.

h. If any of the above readings exceed 60μs, adjust A14C110 to reduce the jitter.

i. Repeat the ramp jitter measurements of steps d and f, adjusting A14C110 as necessary to reduce the jitter to 60μs or for the best compromise between the two.

NOTE

If ramp jitter cannot be adjusted satisfactorily, troubleshoot the ramp generating circuitry (Service Group J).

j. The RMP test jumper can be left off if it results in the best possible adjustment.

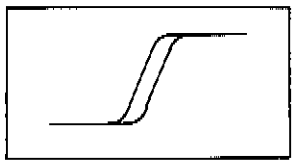

Figure 5-1. Ramp Reset Waveform.

5-17. Amplitude Flatness. Δ5

Equipment Required: 1Vrms/50Ω Thermal Converter (-hp- Model 11050A), Digital Voltmeter (-hp- Model 3455A/3466A), Resistor 200Ω 1% 1/8W 0757-0407, Resistor 50Ω 1% 0.5W 0698-5965, Resistor 13Ω 1% 1/8W 0757-0380, Resistor 25Ω 5% 1/4W 0683-2505, Resistor 150Ω 1% 1/8W 0757-0284

a. Set the 3325A as follows:

Function.....Sinc
Amplitude.....10Vp-p
Frequency.....1kHz

b. Connect the 3325A signal output (through the 10Vp-p pad and thermal converter) to the digital voltmeter (see Figure 5-2a).

CAUTION

Insure that the input voltage to the thermal converter does not exceed 1Vrms. Also for best results, allow the thermal converter time to settle and adjust to surrounding temperatures.

c. Note and record the dc voltage reading on the voltmeter. This is the flatness reference voltage.

d. Set the 3325A frequency to 20MHz. Using a nonconductive tool, adjust A14C217 to obtain the same reading as the reference recorded in step c.

e. Set the 3325A to 10MHz. Adjust A14R142 to obtain the same reading as recorded in step c. Repeat step d, adjusting A14C217 as necessary.

Δ5 see Section VII for alternate procedure

f. Set the 3325A to 16MHz. The voltmeter reading should be within ±0.15mV of the reference recorded in step c. If not, decrease padding capacitor A14C101 using the capacitors shown in Table 5-2. Repeat steps d and e.

g. Set the 3325A to 20MHz. Bump the frequency down to 1MHz in 1MHz steps. Note the dc voltage at each frequency and insure that it is within ±0.15mV of the reference recorded in step c.

h. If the dc voltage measured in the 19-21MHz range is out of tolerance, increase or decrease the value of A14C103 as necessary, using the values shown in Table 5-2. If A14C103 is changed, repeat steps d and g.

i. Set the 3325A amplitude to 3.0Vp-p.

j. Replace the 10Vp-p pad with the 3.0Vp-p pad (Figure 5-2b). Repeat steps d and g. If a voltage measured in step g is out of tolerance, repeat the amplitude flatness adjustment with the 3325A at both 10Vp-p and 3Vp-p until all voltages are within tolerance.

CAUTION

Insure that the input voltage to the thermal converter does not exceed 1Vrms.

5-18. Mixer Spurious Signal.

Equipment Required: high frequency spectrum analyzer (-hp- Model 141T/8552B/8553B/8566A/8568A)

a. Set the 3325A as follows:

Function ..... Sine
Amplitude 0.999Vp-p
Frequency 20MHz

b. Set the spectrum analyzer as follows:

Center Frequency 10MHz
Bandwidth 30kHz
Scan Width 2MHz/div
Input Attenuator 10dB
Scan Time 20ms/div
Log Ref Level 0dB
Vernier ..... −10dB
Scale ..... 10dB log
Video Filter 10kHz
Scan Mode ..... Int
Scan Trigger ..... Auto

c. Connect the 3325A signal output to the spectrum analyzer's 50Ω input.

d. The 2:1 mixer spur should occur at 10MHz. Using a non-conductive tool, adjust A3R115 (MXR ADJ) until the 2:1 spur is at a minimum. Check the VCO/2 spur at 5MHz.

e. Using the modify keys, bump the frequency from 20MHz to 11MHz in 1MHz steps. Observe the spectrum analyzer for spurious responses. At 18MHz, check for the 3:2 spur at 6MHz. Note that in all cases, all spurious responses should be > 70dB below the desired signal.

Table 5-2. Padding Values.

A14C101	A14C103
68pf -hp- p/n 0140-0192 75pf -hp- p/n 0160-2202 82pf*-hp- p/n 0160-0145	130pf -hp- p/n 0140-0195 140pf*-hp- p/n 0140-0217 150pf -hp- p/n 0140-0196
*Loaded Value	

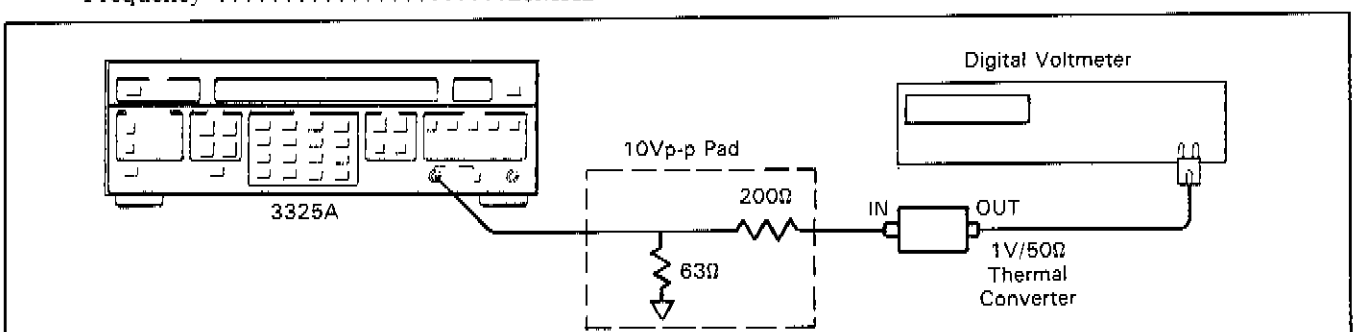

Figure 5-2a. Amplitude Flatness Adjustment (10Vp-p Pad).

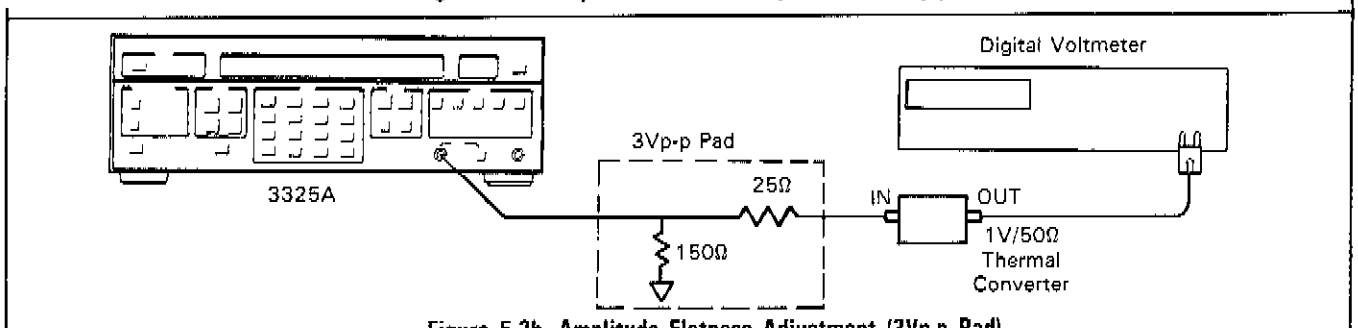

Figure 5-2b. Amplitude Flatness Adjustment (3Vp-p Pad).

Fig 5-3
Sht 1 of 4

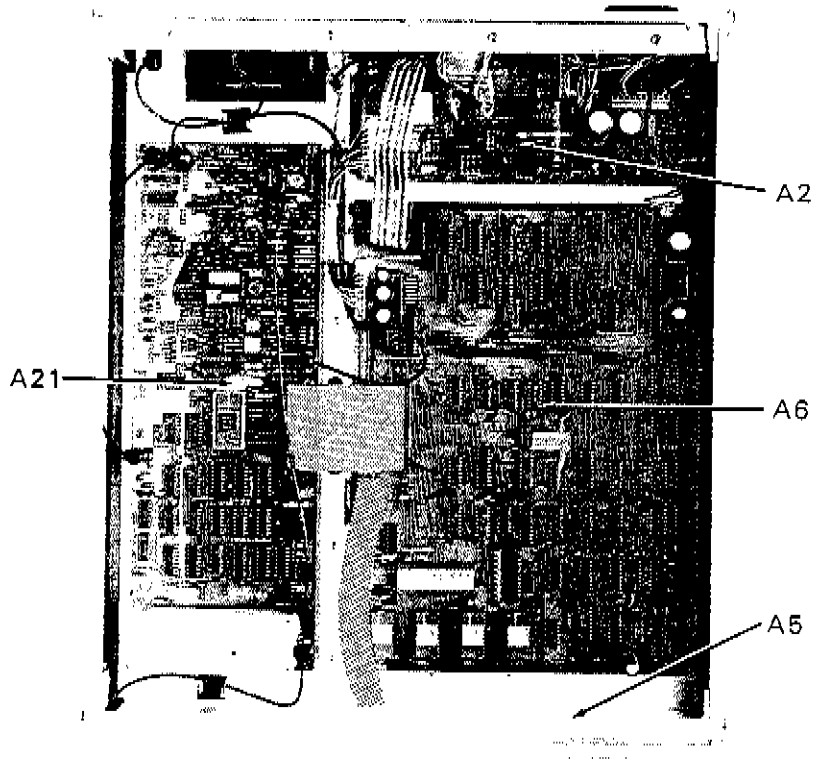

TOP VIEW

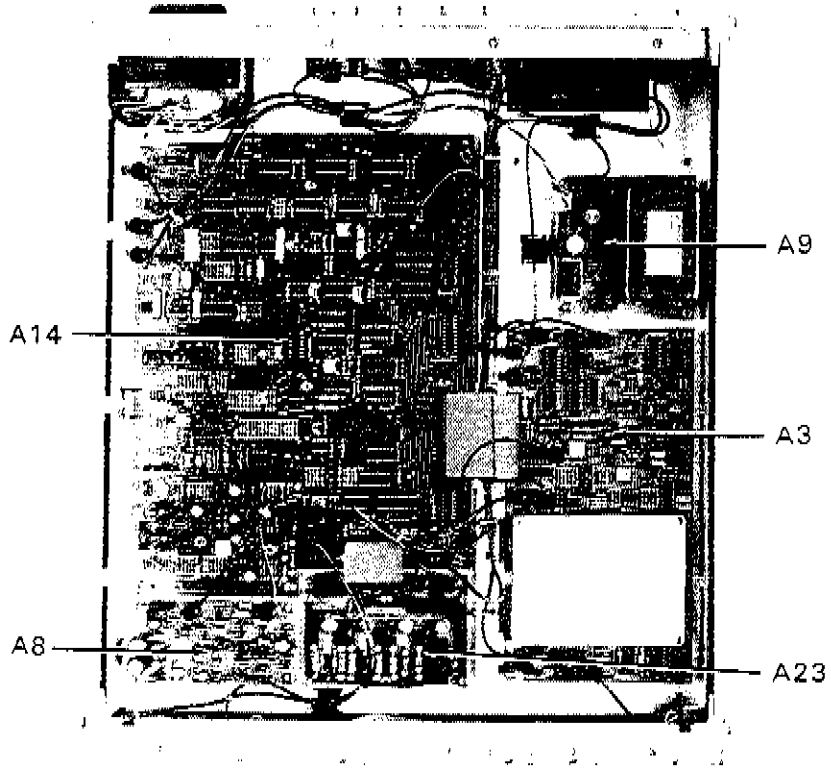

BOTTOM VIEW

Fig 5-3
Sht 2 of 4

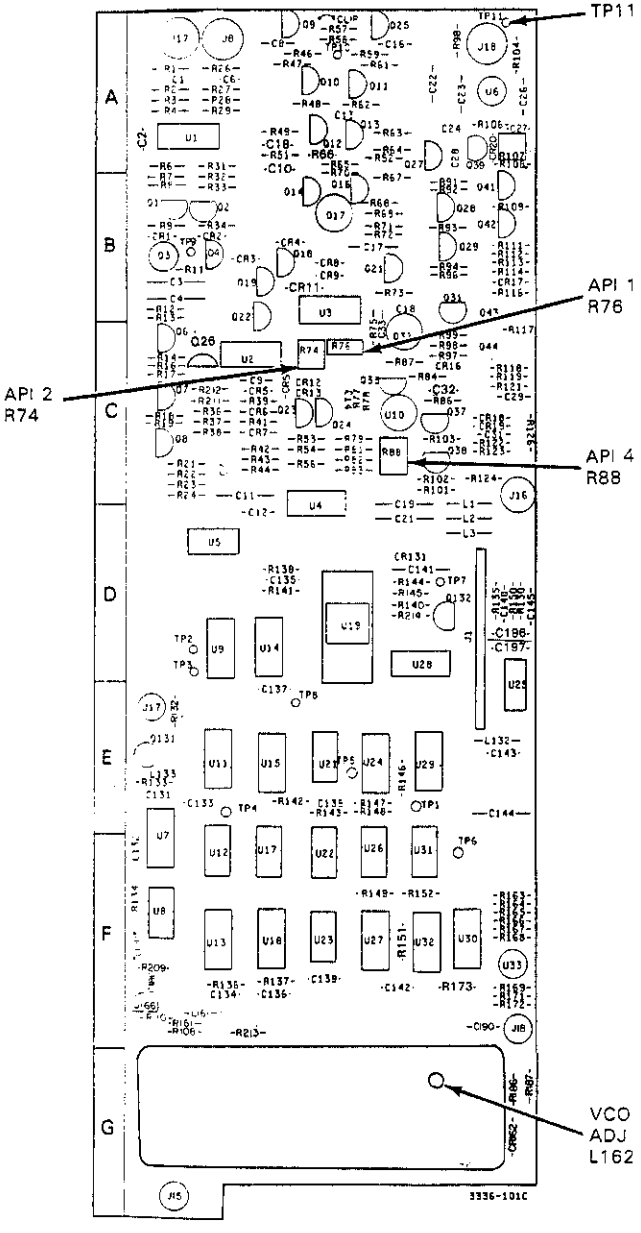

A21
03325-66521
Rev C

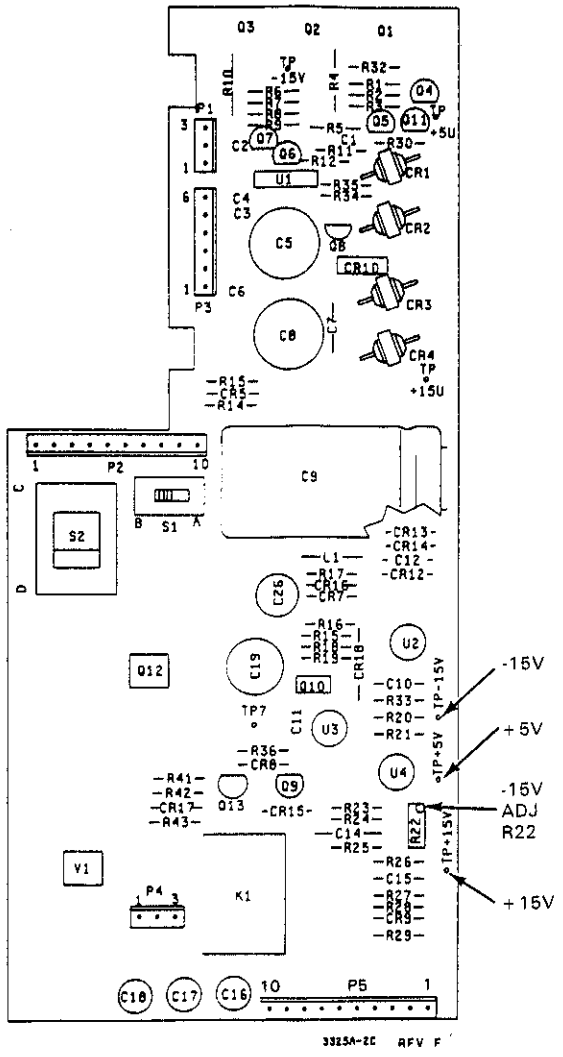

A2
03325-66502
Rev F

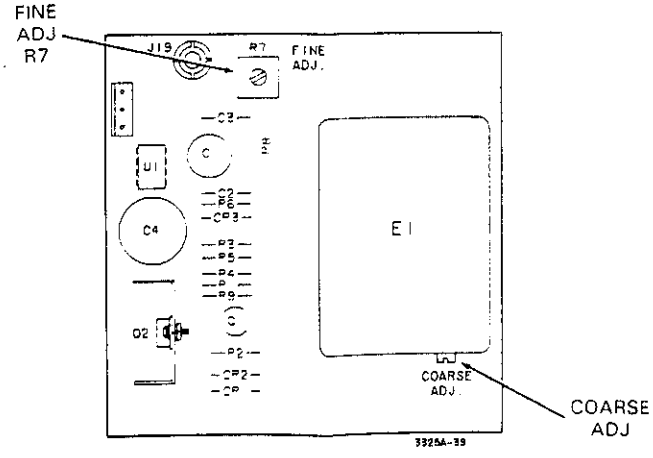

A9
03325-66509
Rev A

Fig 5-3
Sht 3 of 4

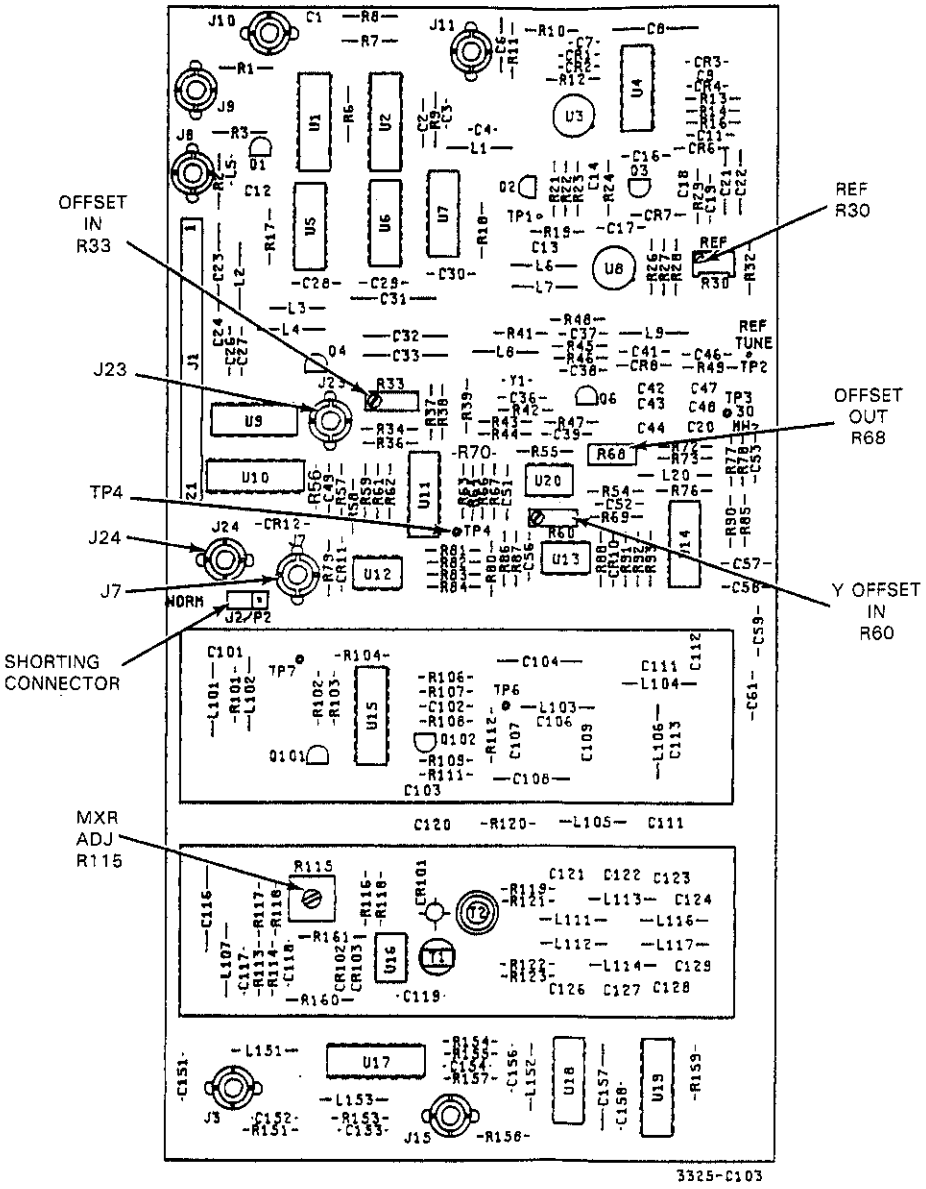

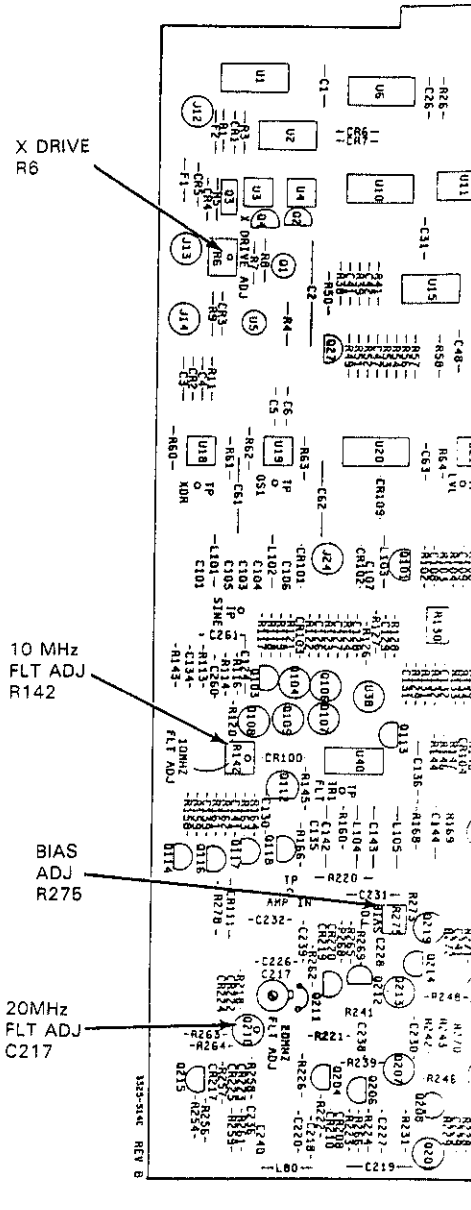

Δ4

A3
03325-66503
Rev C

Δ5

COARSE ADJ

Δ4 - see Section VII for adjustment locations on earlier boards

Δ5 - see Section VII for adjustr

Fig 5-3
Sht 4 of 4

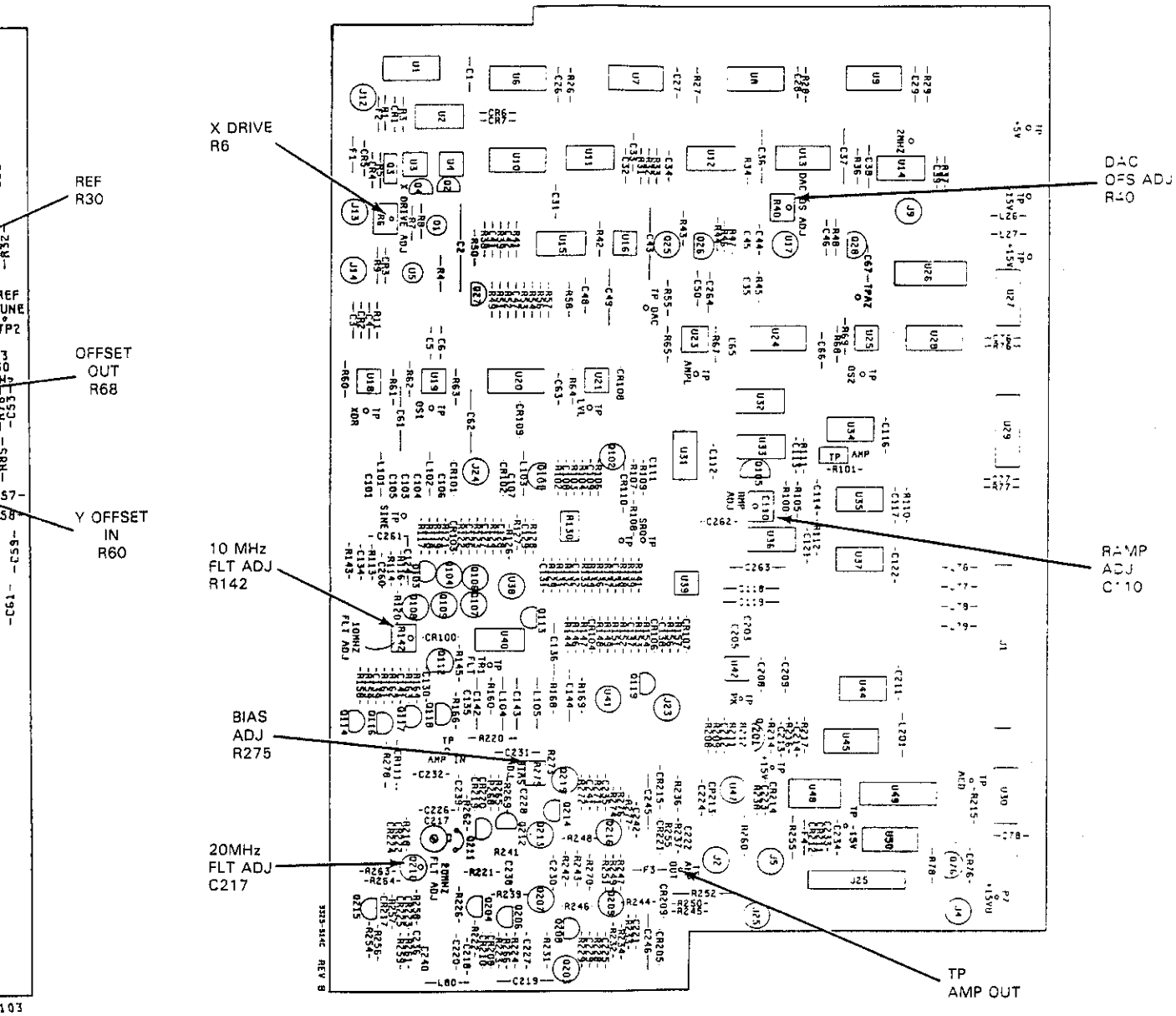

Δ5

A14
03325-66514
Rev C

Δ5 - see Section VII for adjustment locations on earlier boards

Figure 5-3. Location of Adjustments.

SECTION VI
REPLACEABLE PARTS

6-1. INTRODUCTION.

6-2. This section contains information for ordering replacement parts. Table 6-3 lists parts in alphanumeric order of their reference designators and indicates the description, -hp- part number of each part, together with any applicable notes, and provides the following:

a. Total quantity used in the instrument (Qty column). The total quantity of a part is given the first time the part number appears.

b. Description of the part. (See List of Abbreviations in Table 6-1.)

c. Typical manufacturer of the part is a five-digit code. (See Table 6-2 for List of Manufacturers.)

d. Manufacturer's part number.

6-3. Miscellaneous parts are listed in Table 6-3 following their respective assemblies. General miscellaneous parts are listed at the conclusion of Table 6-3.

6-4. ORDERING INFORMATION.

6-5. To obtain replacement parts, address order or inquiry to your local Hewlett-Packard Field Office. (See List of Office Locations at the end of this manual.) Identify parts by their Hewlett-Packard part numbers. Include instrument model and serial numbers.

6-6. NON-LISTED PARTS.

6-7. To obtain a part that is not listed, include:

a. Instrument model number.
b. Instrument serial number.
c. Description of the part.
d. Function and location of the part.

6-8. PROPRIETARY PARTS.

6-9. Items marked by a dagger (†) in the reference designator column are available only for repair and service of Hewlett-Packard instruments.

6-10. PRINTED CIRCUIT ASSEMBLIES.

6-11. Printed circuit assemblies are listed in Table 6-3. An itemized parts listing of each assembly is located in the service group associated with each printed circuit assembly.

Table 6-1. List of Abbreviations.

ABBREVIATIONS

Ag	silver	Hz	hertz (cycle(s) per second)	NPO	negative positive zero (zero temperature coefficient)	sl	slide
Al	aluminum					SPDT	single-pole double-throw
A	ampere(s)	ID	inside diameter	ns	nanosecond(s) = 10^{-9} seconds	SPST	single-pole single-throw
Au	gold	impg	impregnated	nsr	not separately replaceable		
		incd	incandescent			Ta	tantalum
C	capacitor	ins	insulation(ed)	Ω	ohm(s)	TC	temperature coefficient
cer	ceramic			obd	order by description	TiO_2	titanium dioxide
coef	coefficient	kΩ	kilohm(s) = 10^{+3} ohms	OD	outside diameter	tog	toggle
com	common	kHz	kilohertz = 10^{+3} hertz			tol	tolerance
comp	composition			p	peak	trim	trimmer
conn	connection	L	inductor	pA	picoampere(s)	TSTR	transistor
		lin	linear taper	pc	printed circuit		
dep	deposited	log	logarithmic taper	pF	picofarad(s) 10^{-12} farads	V	volt(s)
DPDT	double-pole double-throw			piv	peak inverse voltage	vacw	alternating current working voltage
DPST	double-pole single-throw	mA	milliampere(s) = 10^{-3} amperes	p/o	part of	var	variable
		MHz	megahertz = 10^{+6} hertz	pos	position(s)	vdcw	direct current working voltage
elect	electrolytic	MΩ	megohm(s) = 10^{+6} ohms	poly	polystyrene		
encap	encapsulated	met film	metal film	pot	potentiometer	W	watt(s)
		mfr	manufacturer	p-p	peak-to-peak	w/	with
F	farad(s)	ms	millisecond	ppm	parts per million	wiv	working inverse voltage
FET	field effect transistor	mtg	mounting	prec	precision (temperature coeffient, long term stability and/or tolerance)	w/o	without
fxd	fixed	mV	millivolt(s) = 10^{-3} volts			ww	wirewound
		μF	microfarad(s)				
GaAs	gallium arsenide	μs	microsecond(s)	R	resistor		
GHz	gigahertz = 10^{+9} hertz	μV	microvolt(s) = 10^{-6} volts	Rh	rhodium		
gd	guard(ed)	my	Mylar®	rms	root-mean-square	*	optimum value selected at factory, average value shown (part may be omitted)
Ge	germanium			rot	rotary	**	no standard type number assigned selected or special type
gnd	ground(ed)	nA	nanoampere(s) = 10^{-9} amperes				
		NC	normally closed	Se	selenium		
H	henry(ies)	Ne	neon	sect	section(s)		
Hg	mercury	NO	normally open	Si	silicon	®	Dupont de Nemours

DESIGNATORS

A	assembly	FL	filter	Q	transistor	TS	terminal strip
B	motor	HR	heater	QCR	transistor-diode	U	microcircuit
BT	battery	IC	integrated circuit	R	resistor	V	vacuum tube, neon bulb,photocell, etc.
C	capacitor	J	jack	RT	thermistor	W	cable
CR	diode	K	relay	S	switch	X	socket
DL	delay line	L	inductor	T	transformer	XDS	lampholder
DS	lamp	M	meter	TB	terminal board	XF	fuseholder
E	misc electronic part	MP	mechanical part	TC	thermocouple	Y	crystal
F	fuse	P	plug	TP	test point	Z	network

Table 6-2. List of Manufacturers.

Mfr. No.	Manufacturer Name	Address
S0545	Nippon Electric Co.	Tokyo, JP
00000	Any Satisfactory Supplier	
00494	Addressograph Multigraph Corp.	Cleveland, OH 44117
01121	Allen-Bradley Co.	Milwaukee, WI 53204
01295	Texas Instr Inc. Semicond Cmpnt Div.	Dallas, TX 75222
03888	KDI Pyrofilm Corp.	Whippany, NJ 07981
04713	Motorola Semiconductor Products	Phoenix, AZ 85008
06383	Panduit Corp.	Tinley Park, IL 60477
07263	Fairchild Semiconductor Div.	Mountain View, CA 94042
13606	Sprague Elect Co. Semiconductor Div.	Concord, NH 03301
18324	Signetics Corp.	Sunnyvale, CA 94086
19701	Mepco/Electra Corp.	Mineral Wells, TX 76067
24546	Corning Glass Works (Bradford)	Bradford, PA 16701
26654	Varadyne Inc.	Santa Monica, CA 94040
27014	National Semiconductor Corp.	Santa Clara, CA 95051
28480	Hewlett-Packard Co. Corporate Hq.	Palo Alto, CA 94304
3L585	RCA Corp. Solid State Div.	Somerville, NJ
32293	Intersil Inc.	Cupertino, CA 95014
32997	Bourns Inc. Trimpot Prod Div.	Riverside, CA 92507
34335	Advanced Micro Devices Inc.	Sunnyvale, CA 94086
51642	Centre Engineering Inc.	State College, PA 16801
52763	Stettner Electronics Inc.	Chattanooga, TN 13035
55576	Synertek	Santa Clara, CA 95051
56289	Sprague Electric Co.	North Adams, MA 01247
72136	Electro Motive Corp.	Florence, SC 06226
74970	Johnson E F Co.	Waseca, MN 56093
75042	TRW Inc. Philadelphia Div.	Philadelphia, PA 19108
75915	Littelfuse Inc.	Des Plaines, IL 60016
84411	TRW Capacitor Div.	Ogallala, NE 69153
91637	Dale Electronics Inc.	Columbus, NE 68601

Replaceable Parts

Table 6-3. Replaceable Parts

Reference Designation	HP Part Number	C D	Qty	Description	Mfr Code	Mfr Part Number
A2	03325-66502	9	2	POWER SUPPLY ASSY	28480	03325-66502
A2C1	0160-3508	9	5	CAPACITOR-FXD 1UF +80-20% 50VDC CER	28480	0160-3508
A2C2	0160-3508	9		CAPACITOR-FXD 1UF +80-20% 50VDC CER	28480	0160-3508
A2C3	0160-3558	9	25	CAPACITOR-FXD .1UF +-20% 50VDC CER	28480	0160-3558
A2C4	0160-3558	9		CAPACITOR-FXD .1UF +-20% 50VDC CER	28480	0160-3558
A2C5	0180-2635	3	2	CAPACITOR-FXD 1000UF+50-10% 35VDC AL	28480	0180-2635
A2C6	0160-3508	9		CAPACITOR-FXD 1UF +80-20% 50VDC CER	28480	0160-3508
A2C7	0180-0309	4	1	CAPACITOR-FXD 4.7UF+-20% 10VDC TA	56289	150D475X0010A2
A2C8	0180-2635	3		CAPACITOR-FXD 1000UF+50-10% 35VDC AL	28480	0180-2635
A2C9	0180-4610	8	1	CAPACITOR-FXD 8000UF+50-10% 16VDC AL	28480	0180-4610
A2C10	0160-3847	9	141	CAPACITOR-FXD .01UF +100-0% 50VDC CER	28480	0160-3847
A2C11	0160-3508	9		CAPACITOR-FXD 1UF +80-20% 50VDC CER	28480	0160-3508
A2C12	0160-4571	8	28	CAPACITOR-FXD .1UF +80-20% 50VDC CER	28480	0160-4571
A2C14	0180-1701	2	2	CAPACITOR-FXD 6.8UF+-20% 6VDC TA	56289	150D685X0006A2
A2C15	0160-3847	9		CAPACITOR-FXD .01UF +100-0% 50VDC CER	28480	0160-3847
A2C16	0180-2823	1	6	CAPACITOR-FXD 470UF+50-10% 6.3VDC AL	28480	0180-2823
A2C17	0180-0423	3	2	CAPACITOR-FXD 100UF+50-10% 25VDC AL	28480	0180-0423
A2C18	0180-0423	3		CAPACITOR-FXD 100UF+50-10% 25VDC AL	28480	0180-0423
A2C19	0180-3008	6	1	CAPACITOR-FXD 470UF+50-10% 35VDC AL	28480	0180-3008
A2C20	0180-2823	1		CAPACITOR-FXD 470UF+50-10% 6.3VDC AL	28480	0180-2823
A2CR1	1901-0662	3	4	DIODE-PWR RECT 100V 6A	04713	MR751
A2CR2	1901-0662	3		DIODE-PWR RECT 100V 6A	04713	MR751
A2CR3	1901-0662	3		DIODE-PWR RECT 100V 6A	04713	MR751
A2CR4	1901-0662	3		DIODE-PWR RECT 100V 6A	04713	MR751
A2CR5	1902-0025	4	2	DIODE-ZNR 10V 5% DO-35 PD=.4W TC=+.06%	28480	1902-0025
A2CR7	1902-3214	9	1	DIODE-ZNR 16.2V 2% DO-35 PD=.4W	28480	1902-3214
A2CR8	1901-0040	1	46	DIODE-SWITCHING 30V 50MA 2NS DO-35	28480	1901-0040
A2CR9	1902-0777	3	3	DIODE-ZNR 1N825 6.2V 5% DO-7 PD=.4W	04713	1N825
A2CR10	1884-0266	5	1	THYRISTOR-SCR 2N6400 TO-220AB VRRM=50	3L585	2N6400
A2CR12	1901-0040	1		DIODE-SWITCHING 30V 50MA 2NS DO-35	28480	1901-0040
A2CR13	1901-0040	1		DIODE-SWITCHING 30V 50MA 2NS DO-35	28480	1901-0040
A2CR14	1901-0040	1		DIODE-SWITCHING 30V 50MA 2NS DO-35	28480	1901-0040
A2CR15	1901-0518	8	13	DIODE-SM SIG SCHOTTKY	28480	1901-0518
A2CR16	1901-0040	1		DIODE-SWITCHING 30V 50MA 2NS DO-35	28480	1901-0040
A2CR17	1901-0535	9	9	DIODE-SM SIG SCHOTTKY	28480	1901-0535
A2CR18	1901-0518	8		DIODE-SM SIG SCHOTTKY	28480	1901-0518
A2K1	0490-0745	9	1	RELAY 1C 6VDC-COIL 1A 115VAC	28480	0490-0745
A2L1	9100-3807	4	1	INDUCTOR RF-CH-MLD 110NH 5% .166DX.305LG	28480	9100-3807
A2P1	1251-4246	8	4	CONNECTOR 3-PIN M POST TYPE	28480	1251-4246
A2P2	1251-3750	7	2	CONNECTOR 10-PIN M POST TYPE	28480	1251-3750
A2P3	1251-3638	0	1	CONNECTOR 6-PIN M POST TYPE	28480	1251-3638
A2P4	1251-4246	8		CONNECTOR 3-PIN M POST TYPE	28480	1251-4246
A2P5	1251-3570	7	2	CONNECTOR 10-PIN M POST TYPE	28480	1251-3570
A2Q1	03325-66901	2	1	XSTR ASSEMBLY	28480	03325-66901
A2Q2	03325-66902	3	1	XSTR ASSEMBLY	28480	03325-66902
A2Q3	03325-66903	4	1	XSTR ASSEMBLY	28480	03325-66903
A2Q4	1854-0094	4	1	TRANSISTOR NPN SI PD=200MW FT=350MHZ	28480	1854-0094
A2Q5	1853-0089	5	16	TRANSISTOR PNP 2N4917 SI PD=200MW	07263	2N4917
A2Q6	1854-0215	1	22	TRANSISTOR NPN SI PD=350MW FT=300MHZ	04713	2N3904
A2Q7	1853-0089	5		TRANSISTOR PNP 2N4917 SI PD=200MW	07263	2N4917
A2Q8	1854-0215	1		TRANSISTOR NPN SI PD=350MW FT=300MHZ	04713	2N3904
A2Q9	1854-0071	7	3	TRANSISTOR NPN SI PD=300MW FT=200MHZ	28480	1854-0071
A2Q10	1854-0692	8	3	TRANSISTOR NPN SI PD=15W FT=50MHZ	04713	MJE223
A2Q11	1853-0089	5		TRANSISTOR PNP 2N4917 SI PD=200MW	07263	2N4917
A2Q12	1853-0450	4	2	TRANSISTOR PNP SI TO-220AB PD=60W	04713	MJE371K
A2Q13	1853-0066	8	4	TRANSISTOR PNP SI TO-92 PD=625MW	28480	1853-0066
A2R1	0757-0283	6	10	RESISTOR 2K 1% .125W F TC=0+-100	24546	C4-1/8-T0-2001-F
A2R2	0757-0283	6		RESISTOR 2K 1% .125W F TC=0+-100	24546	C4-1/8-T0-2001-F
A2R3	0683-2035	3	3	RESISTOR 20K 5% .25W FC TC=-400/+800	01121	CB2035
A2R4	0811-2546	4	1	RESISTOR .56 5% .5W PW TC=0+-300	75042	BW-20-1/2-R56-J
A2R5	0683-3925	2	1	RESISTOR 3.9K 5% .25W FC TC=-400/+700	01121	CB3925
A2R6	0757-0280	3	17	RESISTOR 1K 1% .125W F TC=0+-100	24546	C4-1/8-T0-1001-F
A2R7	0757-0280	3		RESISTOR 1K 1% .125W F TC=0+-100	24546	C4-1/8-T0-1001-F
A2R8	0683-2035	3		RESISTOR 20K 5% .25W FC TC=-400/+800	01121	CB2035
A2R9	0683-1025	9	35	RESISTOR 1K 5% .25W FC TC=-400/+600	01121	CB1025
A2R10	0811-0548	2	1	RESISTOR .47 5% .5W PW TC=0+-300	75042	BW20-5/10-.47R-J
A2R11	0683-1025	9		RESISTOR 1K 5% .25W FC TC=-400/+600	01121	CB1025
A2R12	0683-4715	0	7	RESISTOR 470 5% .25W FC TC=-400/+600	01121	CB4715
A2R13	0683-1525	4	4	RESISTOR 1.5K 5% .25W FC TC=-400/+700	01121	CB1525
A2R14	0683-1015	7	23	RESISTOR 100 5% .25W FC TC=-400/+500	01121	CB1015
A2R15	0757-0404	3	1	RESISTOR 130 1% .125W F TC=0+-100	24546	C4-1/8-T0-131-F
A2R16	0757-0441	8	2	RESISTOR 8.25K 1% .125W F TC=0+-100	24546	C4-1/8-T0-8251-F
A2R17	0757-0460	1	1	RESISTOR 61.9K 1% .125W F TC=0+-100	24546	C4-1/8-T0-6192-F
A2R18	0683-5125	8	2	RESISTOR 5.1K 5% .25W FC TC=-400/+700	01121	CB5125
A2R19	0683-2705	4	1	RESISTOR 27 5% .25W FC TC=-400/+500	01121	CB2705
A2R20	0698-6360	6	7	RESISTOR 10K .1% .125W F TC=0+-25	28480	0698-6360

See introduction to this section for ordering information
*Indicates factory selected value

Replaceable Parts

Table 6-3. Replaceable Parts

Reference Designation	HP Part Number	C D	Qty	Description	Mfr Code	Mfr Part Number
A2R21	0683-1015	7		RESISTOR 100 5% .25W FC TC=-400/+500	01121	CB1015
A2R22	2100-3296	8	1	RESISTOR-TRMR 1K 10% C TOP-ADJ 17-TRN	28480	2100-3296
A2R23	0698-6617	8	3	RESISTOR 15K .1% .125W F TC=0+-25	28480	0698-6619
A2R24	0698-6320	8	5	RESISTOR 5K .1% .125W F TC=0+-25	03888	PME55-1/8-T9-5001-B
A2R25	0683-1015	7		RESISTOR 100 5% .25W FC TC=-400/+500	01121	CB1015
A2R26	0698-8191	5	1	RESISTOR 12.5K .1% .125W F TC=0+-25	19701	MF4C1/8-T9-1252-B
A2R27	0698-8060	7	1	RESISTOR 8.64K .1% .125W F TC=0+-25	19701	MF4C1/8-T9-8641-B
A2R28	0698-3512	4	1	RESISTOR 1.18K 1% .125W F TC=0+-100	24546	C4-1/8-T0-1181-F
A2R29	0683-1015	7		RESISTOR 100 5% .25W FC TC=-400/+500	01121	CB1015
A2R30	0683-1035	1	27	RESISTOR 10K 5% .25W FC TC=-400/+700	01121	CB1035
A2R32	0683-4725	2	4	RESISTOR 4.7K 5% .25W FC TC=-400/+700	01121	CB4725
A2R33	0698-6360	6		RESISTOR 10K .1% .125W F TC=0+-25	28480	0698-6360
A2R34	0683-1045	3	7	RESISTOR 100K 5% .25W FC TC=-400/+800	01121	CB1045
A2R35	0683-2035	3		RESISTOR 20K 5% .25W FC TC=-400/+800	01121	CB2035
A2R36	0686-5115	2	1	RESISTOR 510 5% .5W CC TC=0+529	01121	EB5115
A2R41	0683-1005	5	1	RESISTOR 10 5% .25W FC TC=-400/+500	01121	CB1005
A2R42	0683-1625	5	1	RESISTOR 1.6K 5% .25W FC TC=-400/+700	01121	CB1625
A2R43	0683-3025	3	1	RESISTOR 3K 5% .25W FC TC=-400/+700	01121	CB3025
A2S1	3101-1162	6	1	SWITCH-SL SPDT MINTR .5A 125VAC/DC PC	28480	3101-1162
A2S2	3101-2042	3	1	SWITCH-SL DPDT STD 2A 250VAC SLDR-LUG	28480	3101-2042
A2U1	1906-0096	7	3	DIODE-FW BRDG 200V 2A	04713	MDA202
A2U2	1826-0678	1	3	IC OP AMP GP DUAL TO-99 PKG	27014	LM358H
A2U3	1826-0678	1		IC OP AMP GP DUAL TO-99 PKG	27014	LM358H
A2U4	1826-0678	1		IC OP AMP GP DUAL TO-99 PKG	27014	LM358H
A2V1	0837-0120	0	1	VARISTOR-130VAC	28480	0837-0120
	1251-0600	0	34	CONNECTOR-SGL CONT PIN 1.14-MM-BSC-SZ SQ	28480	1251-0600
	1400-0507	3	1	CABLE TIE .062-2-DIA .095-WD NYL	28480	1400-0507
	2200-0143	0	3	SCREW-MACH 4-40 .375-IN-LG PAN-HD-POZI	28480	2200-0143
	2260-0009	3	1	NUT-HEX-W/LKWR 4-40-THD .094-IN-THK	00000	ORDER BY DESCRIPTION
	2360-0113	2	67	SCREW-MACH 6-32 .25-IN-LG PAN-HD-POZI	00000	ORDER BY DESCRIPTION
	3050-0440	2	3	WASHER-SHLDR NO. 4 .115-IN-ID .2-IN-OD	28480	3050-0440
	7120-6712	6	2	LABEL-WARNING .5-IN-WD 1-IN-LG MYLAR	28480	7120-6712
	7121-1234	9	9	LABEL-CAUTION 1.925-IN-WD 2.24-IN-LG	28480	7121-1234
A3	03325-66503	0	2	SIGNAL SOURCE ASSY	28480	03325-66503
A3C1	0160-3558	9		CAPACITOR-FXD .1UF +-20% 50VDC CER	28480	0160-3558
A3C2	0160-3847	9		CAPACITOR-FXD .01UF +100-0% 50VDC CER	28480	0160-3847
A3C3	0160-0362	7	2	CAPACITOR-FXD 510PF +-5% 300VDC MICA	28480	0160-0362
A3C4	0160-0362	7		CAPACITOR-FXD 510PF +-5% 300VDC MICA	28480	0160-0362
A3C6	0160-3847	9		CAPACITOR-FXD .01UF +100-0% 50VDC CER	28480	0160-3847
A3C7	0160-2204	0	4	CAPACITOR-FXD 100PF +-5% 300VDC MICA	28480	0160-2204
A3C8	0180-0228	6	3	CAPACITOR-FXD 22UF+-10% 15VDC TA	56289	150D226X9015B2
A3C9	0160-3558	9		CAPACITOR-FXD .1UF +-20% 50VDC CER	28480	0160-3558
A3C11	0160-0174	9	1	CAPACITOR-FXD .47UF +80-20% 25VDC CER	28480	0160-0174
A3C12	0140-0191	8	4	CAPACITOR-FXD 56PF +-5% 300VDC MICA	72136	DM15E560J0300WV1CR
A3C13	0140-0199	6	1	CAPACITOR-FXD 240PF +-5% 300VDC MICA	72136	DM15F241J0300WV1CR
A3C14	0160-2264	2	1	CAPACITOR-FXD 20PF +-5% 500VDC CER 0+-30	28480	0160-2264
A3C16	0160-3847	9		CAPACITOR-FXD .01UF +100-0% 50VDC CER	28480	0160-3847
A3C17	0160-3847	9		CAPACITOR-FXD .01UF +100-0% 50VDC CER	28480	0160-3847
A3C18	0140-0204	4	1	CAPACITOR-FXD 47PF +-5% 500VDC MICA	72136	DM15E470J0500WV1CR
A3C19	0160-3847	9		CAPACITOR-FXD .01UF +100-0% 50VDC CER	28480	0160-3847
A3C20	0160-2252	8	2	CAPACITOR-FXD 6.2PF +-.25PF 500VDC CER	28480	0160-2252
A3C21	0180-0197	8	2	CAPACITOR-FXD 2.2UF+-10% 20VDC TA	56289	150D225X9020A2
A3C22	0180-0197	8		CAPACITOR-FXD 2.2UF+-10% 20VDC TA	56289	150D225X9020A2
A3C23	0180-1746	5	23	CAPACITOR-FXD 15UF+-10% 20VDC TA	56289	150D156X9020B2
A3C24	0160-3558	9		CAPACITOR-FXD .1UF +-20% 50VDC CER	28480	0160-3558
A3C26	0160-3847	9		CAPACITOR-FXD .01UF +100-0% 50VDC CER	28480	0160-3847
A3C27	0160-3847	9		CAPACITOR-FXD .01UF +100-0% 50VDC CER	28480	0160-3847
A3C28	0160-3847	9		CAPACITOR-FXD .01UF +100-0% 50VDC CER	28480	0160-3847
A3C29	0160-3847	9		CAPACITOR-FXD .01UF +100-0% 50VDC CER	28480	0160-3847
A3C31	0180-0229	7	1	CAPACITOR-FXD 33UF+-10% 10VDC TA	56289	150D336X9010B2
A3C32	0180-1746	5		CAPACITOR-FXD 15UF+-10% 20VDC TA	56289	150D156X9020B2
A3C33	0180-1746	5		CAPACITOR-FXD 15UF+-10% 20VDC TA	56289	150D156X9020B2
A3C34	0160-3847	9		CAPACITOR-FXD .01UF +100-0% 50VDC CER	28480	0160-3847
A3C36	0160-3847	9		CAPACITOR-FXD .01UF +100-0% 50VDC CER	28480	0160-3847
A3C37	0160-3847	9		CAPACITOR-FXD .01UF +100-0% 50VDC CER	28480	0160-3847
A3C38	0160-3847	9		CAPACITOR-FXD .01UF +100-0% 50VDC CER	28480	0160-3847
A3C39	0160-3847	9		CAPACITOR-FXD .01UF +100-0% 50VDC CER	28480	0160-3847
A3C41	0160-3847	9		CAPACITOR-FXD .01UF +100-0% 50VDC CER	28480	0160-3847
A3C42	0160-3520	5	1	CAPACITOR-FXD 75PF +-1% 100VDC MICA	28480	0160-3520
A3C43	0160-2254	0	1	CAPACITOR-FXD 7.5PF +-.25PF 500VDC CER	28480	0160-2254
A3C44	0160-2255	1	1	CAPACITOR-FXD 8.2PF +-.25PF 500VDC CER	28480	0160-2255
A3C46	0160-3847	9		CAPACITOR-FXD .01UF +100-0% 50VDC CER	28480	0160-3847
A3C47	0160-3085	7	1	CAPACITOR-FXD 510PF +-1% 300VDC MICA	28480	0160-3085
A3C48	0160-2199	2	1	CAPACITOR-FXD 30PF +-5% 300VDC MICA	28480	0160-2199

See introduction to this section for ordering information
*Indicates factory selected value

Replaceable Parts

Table 6-3. Replaceable Parts

Reference Designation	HP Part Number	C D	Qty	Description	Mfr Code	Mfr Part Number
A3C49	0160-3847	9		CAPACITOR-FXD .01UF +100-0% 50VDC CER	28480	0160-3847
A3C51	0160-3847	9		CAPACITOR-FXD .01UF +100-0% 50VDC CER	28480	0160-3847
A3C52	0160-3847	9		CAPACITOR-FXD .01UF +100-0% 50VDC CER	28480	0160-3847
A3C53	0160-3847	9		CAPACITOR-FXD .01UF +100-0% 50VDC CER	28480	0160-3847
A3C56	0160-3847	9		CAPACITOR-FXD .01UF +100-0% 50VDC CER	28480	0160-3847
A3C57	0160-2265	3	2	CAPACITOR-FXD 22PF +-5% 500VDC CER 0+-30	28480	0160-2265
A3C58	0160-2265	3		CAPACITOR-FXD 22PF +-5% 500VDC CER 0+-30	28480	0160-2265
A3C59	0160-3847	9		CAPACITOR-FXD .01UF +100-0% 50VDC CER	28480	0160-3847
A3C61	0160-3847	9		CAPACITOR-FXD .01UF +100-0% 50VDC CER	28480	0160-3847
A3C101	0160-3558	9		CAPACITOR-FXD .1UF +-20% 50VDC CER	28480	0160-3558
A3C102	0160-3847	9		CAPACITOR-FXD .01UF +100-0% 50VDC CER	28480	0160-3847
A3C103	0160-3847	9		CAPACITOR-FXD .01UF +100-0% 50VDC CER	28480	0160-3847
A3C104	0180-1746	5		CAPACITOR-FXD 15UF+-10% 20VDC TA	56289	150D156X9020B2
A3C106	0160-2252	8		CAPACITOR-FXD 6.2PF +-.25PF 500VDC CER	28480	0160-2252
A3C107	0160-2266	4	1	CAPACITOR-FXD 24PF +-5% 500VDC CER 0+-30	28480	0160-2266
A3C108	0180-1746	5		CAPACITOR-FXD 15UF+-10% 20VDC TA	56289	150D156X9020B2
A3C109	0160-2293	7	1	CAPACITOR-FXD 51.5PF +-1% 500VDC MICA	28480	0160-2293
A3C111	0160-2263	1	1	CAPACITOR-FXD 18PF +-5% 500VDC CER 0+-30	28480	0160-2263
A3C112	0160-2372	3	2	CAPACITOR-FXD 47PF +-2% 300VDC MICA	28480	0160-2372
A3C113	0160-2260	8	1	CAPACITOR-FXD 13PF +-5% 500VDC CER 0+-30	28480	0160-2260
A3C114	0160-2372	3		CAPACITOR-FXD 47PF +-2% 300VDC MICA	28480	0160-2372
A3C116	0180-1746	5		CAPACITOR-FXD 15UF+-10% 20VDC TA	56289	150D156X9020B2
A3C117	0160-3847	9		CAPACITOR-FXD .01UF +100-0% 50VDC CER	28480	0160-3847
A3C118	0160-3847	9		CAPACITOR-FXD .01UF +100-0% 50VDC CER	28480	0160-3847
A3C119	0160-3847	9		CAPACITOR-FXD .01UF +100-0% 50VDC CER	28480	0160-3847
A3C120	0160-2244	8	5	CAPACITOR-FXD 3PF +-.25PF 500VDC CER	28480	0160-2244
A3C121	0140-0198	7	4	CAPACITOR-FXD 39PF +-5% 300VDC MICA	72136	DM15E390J0300WV1CR
A3C122	0160-2251	7	2	CAPACITOR-FXD 5.6PF +-.25PF 500VDC CER	28480	0160-2251
A3C123	0140-0198	7		CAPACITOR-FXD 39PF +-5% 300VDC MICA	72136	DM15E390J0300WV1CR
A3C124	0160-2244	8		CAPACITOR-FXD 3PF +-.25PF 500VDC CER	28480	0160-2244
A3C126	0140-0198	7		CAPACITOR-FXD 39PF +-5% 300VDC MICA	72136	DM15E390J0300WV1CR
A3C127	0160-2251	7		CAPACITOR-FXD 5.6PF +-.25PF 500VDC CER	28480	0160-2251
A3C128	0140-0198	7		CAPACITOR-FXD 39PF +-5% 300VDC MICA	72136	DM15E390J0300WV1CR
A3C129	0160-2244	8		CAPACITOR-FXD 3PF +-.25PF 500VDC CER	28480	0160-2244
A3C151	0160-3847	9		CAPACITOR-FXD .01UF +100-0% 50VDC CER	28480	0160-3847
A3C152	0160-3847	9		CAPACITOR-FXD .01UF +100-0% 50VDC CER	28480	0160-3847
A3C153	0160-3847	9		CAPACITOR-FXD .01UF +100-0% 50VDC CER	28480	0160-3847
A3C154	0160-3847	9		CAPACITOR-FXD .01UF +100-0% 50VDC CER	28480	0160-3847
A3C156	0160-3847	9		CAPACITOR-FXD .01UF +100-0% 50VDC CER	28480	0160-3847
A3C157	0180-1746	5		CAPACITOR-FXD 15UF+-10% 20VDC TA	56289	150D156X9020B2
A3C158	0160-3847	9		CAPACITOR-FXD .01UF +100-0% 50VDC CER	28480	0160-3847
A3CR1	1901-0040	1		DIODE-SWITCHING 30V 50MA 2NS DO-35	28480	1901-0040
A3CR2	1901-0040	1		DIODE-SWITCHING 30V 50MA 2NS DO-35	28480	1901-0040
A3CR3	1901-0518	8		DIODE-SM SIG SCHOTTKY	28480	1901-0518
A3CR4	1901-0518	8		DIODE-SM SIG SCHOTTKY	28480	1901-0518
A3CR6	1902-3149	9	2	DIODE-ZNR 9.09V 5% DO-35 PD=.4W	28480	1902-3149
A3CR7	1902-3030	7	3	DIODE-ZNR 3.01V 5% DO-7 PD=.4W TC=-.067%	28480	1902-3030
A3CR8	0122-0089	5	3	DIODE-VVC 29PF 10% C3/C25-MIN=5 BVR=30V	04713	MV109
A3CR10	1902-0025	4		DIODE-ZNR 10V 5% DO-35 PD=.4W TC=+.06%	28480	1902-0025
A3CR11	1901-0518	8		DIODE-SM SIG SCHOTTKY	28480	1901-0518
A3CR12	1901-0518	8		DIODE-SM SIG SCHOTTKY	28480	1901-0518
A3CR101	1906-0207	2	1	DIODE-MATCHED	28480	1906-0207
A3CR102	1901-0535	9		DIODE-SM SIG SCHOTTKY	28480	1901-0535
A3CR103	1901-0535	9		DIODE-SM SIG SCHOTTKY	28480	1901-0535
A3J1	1251-6567	0	6	CONNECTOR 21-PIN M POST TYPE	28480	1251-6567
A3J2	1258-0141	8	2	JUMPER-REM	28480	1258-0141
A3J3	1251-2969	8		CONNECTOR-PHONO SINGLE PHONO JACK; DIP	28480	1251-2969
A3J5	1251-2969	8		CONNECTOR-PHONO SINGLE PHONO JACK; DIP	28480	1251-2969
A3J6	1251-2969	8		CONNECTOR-PHONO SINGLE PHONO JACK; DIP	28480	1251-2969
A3J7	1251-2969	8		CONNECTOR-PHONO SINGLE PHONO JACK; DIP	28480	1251-2969
A3J8	1251-2969	8		CONNECTOR-PHONO SINGLE PHONO JACK; DIP	28480	1251-2969
A3J9	1251-2969	8		CONNECTOR-PHONO SINGLE PHONO JACK; DIP	28480	1251-2969
A3J10	1251-2969	8		CONNECTOR-PHONO SINGLE PHONO JACK; DIP	28480	1251-2969
A3J11	1251-2969	8		CONNECTOR-PHONO SINGLE PHONO JACK; DIP	28480	1251-2969
A3J15	1251-2969	8		CONNECTOR-PHONO SINGLE PHONO JACK; DIP	28480	1251-2969
A3L1	9100-3551	5	1	Coil-Mld 1uH 5% Q=50	28480	9100-3551
A3L2	9100-1791	1	14	INDUCTOR 290NH 20% .33DX.375LG	28480	9100-1791
A3L3	9140-0210	1	5	INDUCTOR RF-CH-MLD 100UH 5% .166DX.385LG	28480	9140-0210
A3L4	9140-0210	1		INDUCTOR RF-CH-MLD 100UH 5% .166DX.385LG	28480	9140-0210
A3L5	9170-0894	0	4	CORE-SHIELDING BEAD	28480	9170-0894
A3L6	9140-0210	1		INDUCTOR RF-CH-MLD 100UH 5% .166DX.385LG	28480	9140-0210
A3L7	9140-0210	1		INDUCTOR RF-CH-MLD 100UH 5% .166DX.385LG	28480	9140-0210
A3L8	9100-3560	6	1	INDUCTOR RF-CH-MLD 5.6UH 5% .166DX.385LG	28480	9100-3560
A3L9	9140-0253	2	1	INDUCTOR RF-CH-MLD 300NH 1% .166DX.385LG	28480	9140-0253
A3L20	9100-1629	4	1	INDUCTOR RF-CH-MLD 47UH 5% .166DX.385LG	28480	9100-1629
A3L001	9100-3551	5	1	INDUCTOR RF-CH-MLD 1UH 5% .166DX.385LG	28480	9100-3551

See introduction to this section for ordering information
*Indicates factory selected value

Replaceable Parts

Table 6-3. Replaceable Parts

Reference Designation	HP Part Number	C D	Qty	Description	Mfr Code	Mfr Part Number
A3L101	9100-1791	1		INDUCTOR 290NH 20% .23DX.375LG	28480	9100-1791
A3L102	9100-1791	1		INDUCTOR 290NH 20% .23DX.375LG	28480	9100-1791
A3L103	9140-0265	6	2	INDUCTOR RF-CH-MLD 1.6UH 5% .166DX.385LG	28480	9140-0265
A3L104	9100-3552	6	1	INDUCTOR RF-CH-MLD 1.5UH 5% .166DX.385LG	28480	9100-3552
A3L105	9140-0349	7	2	INDUCTOR RF-CH-MLD 1.1UH 5% .166DX.385LG	28480	9140-0349
A3L106	9140-0265	6		INDUCTOR RF-CH-MLD 1.6UH 5% .166DX.385LG	28480	9140-0265
A3L107	9100-0539	3	4	INDUCTOR (MISC ITEM)	28480	9100-0539
A3L108	9140-0142	8	1	INDUCTOR RF-CH-MLD 2.2UH 10% .105DX.26LG	28480	9140-0142
A3L111	9100-3315	9	2	INDUCTOR RF-CH-MLD 820NH 5% .166DX.385LG	28480	9100-3315
A3L112	9100-3315	9		INDUCTOR RF-CH-MLD 820NH 5% .166DX.385LG	28480	9100-3315
A3L113	9100-3546	8	4	INDUCTOR RF-CH-MLD 1.3UH 5% .155DX.375LG	28480	9100-3546
A3L114	9100-3546	8		INDUCTOR RF-CH-MLD 1.3UH 5% .155DX.375LG	28480	9100-3546
A3L116	9100-3546	8		INDUCTOR RF-CH-MLD 1.3UH 5% .155DX.375LG	28480	9100-3546
A3L117	9100-3546	8		INDUCTOR RF-CH-MLD 1.3UH 5% .155DX.375LG	28480	9100-3546
A3L151	9100-1791	1		INDUCTOR 290NH 20% .23DX.375LG	28480	9100-1791
A3L152	9100-0539	3		INDUCTOR (MISC ITEM)	28480	9100-0539
A3L153	9140-0210	1		INDUCTOR RF-CH-MLD 100UH 5% .166DX.385LG	28480	9140-0210
A3MP1	03325-20601	3		SHIELD, TOP	28480	03325-20601
A3MP3	03325-20602	4		SHIELD, BOTTOM	28480	03325-20602
A3MP5	03325-04101	4	1	COVER, 1	28480	03325-04101
A3MP6	03325-04103	6	1	COVER, 3	28480	03325-04103
A3P2	1251-4822	6	3	CONNECTOR 3-PIN M POST TYPE	28480	1251-4822
A3Q1	1853-0448	0	8	TRANSISTOR PNP SI TO-92 PD=625MW	04713	MPSH81
A3Q2	1855-0081	1	6	TRANSISTOR J-FET N-CHAN D-MODE SI	28480	1855-0081
A3Q3	1853-0089	5		TRANSISTOR PNP 2N4917 SI PD=200MW	07263	2N4917
A3Q4	1854-0092	2	1	TRANSISTOR NPN SI PD=200MW FT=600MHZ	28480	1854-0092
A3Q6	1854-0215	1		TRANSISTOR NPN SI PD=350MW FT=300MHZ	04713	2N3904
A3Q101	1853-0089	5		TRANSISTOR PNP 2N4917 SI PD=200MW	07263	2N4917
A3Q102	1853-0089	5		TRANSISTOR PNP 2N4917 SI PD=200MW	07263	2N4917
A3R1	0683-4705	8	37	RESISTOR 47 5% .25W FC TC=-400/+500	01121	CB4705
A3R2	0698-3432	7	2	RESISTOR 26.1 1% .125W F TC=0+-100	03888	PME55-1/8-T0-26R1-F
A3R3	0757-0398	4	3	RESISTOR 75 1% .125W F TC=0+-100	24546	C4-1/8-T0-75R0-F
A3R6	0683-2225	3	22	RESISTOR 2.2K 5% .25W FC TC=-400/+700	01121	CB2225
A3R7	0698-3439	4	2	RESISTOR 178 1% .125W F TC=0+-100	24546	C4-1/8-T0-178R-F
A3R8	0757-0397	3	5	RESISTOR 68.1 1% .125W F TC=0+-100	24546	C4-1/8-T0-68R1-F
A3R9	0683-4715	0		RESISTOR 470 5% .25W FC TC=-400/+600	01121	CB4715
A3R10	0757-0401	0	12	RESISTOR 100 1% .125W F TC=0+-100	24546	C4-1/8-T0-101-F
A3R11	0757-0397	3		RESISTOR 68.1 1% .125W F TC=0+-100	24546	C4-1/8-T0-68R1-F
A3R12	0683-1245	5	1	RESISTOR 120K 5% .25W FC TC=-800/+900	01121	CB1245
A3R13	0683-4725	2		RESISTOR 4.7K 5% .25W FC TC=-400/+700	01121	CB4725
A3R14	0683-1025	9		RESISTOR 1K 5% .25W FC TC=-400/+600	01121	CB1025
A3R16	0683-1025	9		RESISTOR 1K 5% .25W FC TC=-400/+600	01121	CB1025
A3R17	0683-2225	3		RESISTOR 2.2K 5% .25W FC TC=-400/+700	01121	CB2225
A3R18	0757-0442	9	13	RESISTOR 10K 1% .125W F TC=0+-100	24546	C4-1/8-T0-1002-F
A3R19	0683-1045	3		RESISTOR 100K 5% .25W FC TC=-400/+800	01121	CB1045
A3R21	0683-1025	9		RESISTOR 1K 5% .25W FC TC=-400/+600	01121	CB1025
A3R22	0757-0279	0	6	RESISTOR 3.16K 1% .125W F TC=0+-100	24546	C4-1/8-T0-3161-F
A3R23	0757-0438	3	11	RESISTOR 5.11K 1% .125W F TC=0+-100	24546	C4-1/8-T0-5111-F
A3R24	0683-2225	3		RESISTOR 2.2K 5% .25W FC TC=-400/+700	01121	CB2225
A3R26	0757-0283	6		RESISTOR 2K 1% .125W F TC=0+-100	24546	C4-1/8-T0-2001-F
A3R27	0757-0442	9		RESISTOR 10K 1% .125W F TC=0+-100	24546	C4-1/8-T0-1002-F
A3R28	0698-4490	9	1	RESISTOR 29.4K 1% .125W F TC=0+-100	24546	C4-1/8-T0-2942-F
A3R29	0698-3154	0	2	RESISTOR 4.22K 1% .125W F TC=0+-100	24546	C4-1/8-T0-4221-F
A3R30	2100-3789	4	2	RESISTOR-TRMR 20K 10% C TOP-ADJ 17-TRN	28480	2100-3789
A3R32	0683-1025	9		RESISTOR 1K 5% .25W FC TC=-400/+600	01121	CB1025
A3R33	2100-3789	4		RESISTOR-TRMR 20K 10% C TOP-ADJ 17-TRN	28480	2100-3789
A3R34	0699-0191	1	1	RESISTOR 1.600K .1% .125W F TC=0+-25	28480	0699-0191
A3R36	0699-0189	7	1	RESISTOR 259.6 .1% .125W F TC=0+-25	28480	0699-0189
A3R37	0683-7535	8	1	RESISTOR 75K 5% .25W FC TC=-400/+800	01121	CB7535
A3R38	0698-0084	9	2	RESISTOR 2.15K 1% .125W F TC=0+-100	24546	C4-1/8-T0-2151-F
A3R39	0757-0274	5	1	RESISTOR 1.21K 1% .125W F TC=0+-100	24546	C4-1/8-T0-1211-F
A3R41	0683-1025	9		RESISTOR 1K 5% .25W FC TC=-400/+600	01121	CB1025
A3R42	0757-0407	6	2	RESISTOR 200 1% .125W F TC=0+-100	24546	C4-1/8-T0-201-F
A3R43	0698-3155	1	3	RESISTOR 4.64K 1% .125W F TC=0+-100	24546	C4-1/8-T0-4641-F
A3R44	0698-3155	1		RESISTOR 4.64K 1% .125W F TC=0+-100	24546	C4-1/8-T0-4641-F
A3R45	0698-3156	2	6	RESISTOR 14.7K 1% .125W F TC=0+-100	24546	C4-1/8-T0-1472-F
A3R46	0698-3156	2		RESISTOR 14.7K 1% .125W F TC=0+-100	24546	C4-1/8-T0-1472-F
A3R47	0683-4705	8		RESISTOR 47 5% .25W FC TC=-400/+500	01121	CB4705
A3R48	0683-4715	0		RESISTOR 470 5% .25W FC TC=-400/+600	01121	CB4715
A3R49	0683-1035	1		RESISTOR 10K 5% .25W FC TC=-400/+700	01121	CB1035
A3R54	0757-0453	2	1	RESISTOR 30.1K 1% .125W F TC=0+-100	24546	C4-1/8-T0-3012-F
A3R55	0698-3279	0	11	RESISTOR 4.99K 1% .125W F TC=0+-100	24546	C4-1/8-T0-4991-F
A3R56	0683-1025	9		RESISTOR 1K 5% .25W FC TC=-400/+600	01121	CB1025
A3R57	0698-3279	0		RESISTOR 4.99K 1% .125W F TC=0+-100	24546	C4-1/8-T0-4991-F

See introduction to this section for ordering information
*Indicates factory selected value

Replaceable Parts

Table 6-3. Replaceable Parts

Reference Designation	HP Part Number	C D	Qty	Description	Mfr Code	Mfr Part Number
A3R58	0699-0192	2	1	RESISTOR 3.894K .1% .125W F TC=0+-25	28480	0699-0192
A3R59	0683-1025	9		RESISTOR 1K 5% .25W FC TC=-400/+600	01121	CB1025
A3R60	2100-3286	6	1	RESISTOR-TRMR 10K 10% C TOP-ADJ 17-TRN	32997	3292W-1-103
A3R61	0683-4705	8		RESISTOR 47 5% .25W FC TC=-400/+500	01121	CB4705
A3R62	0757-0442	9		RESISTOR 10K 1% .125W F TC=0+-100	24546	C4-1/8-T0-1002-F
A3R63	0698-3156	2		RESISTOR 14.7K 1% .125W F TC=0+-100	24546	C4-1/8-T0-1472-F
A3R64	0698-4437	4	1	RESISTOR 2.94K 1% .125W F TC=0+-100	24546	C4-1/8-T0-2941-F
A3R66	0757-0436	1	1	RESISTOR 4.32K 1% .125W F TC=0+-100	24546	C4-1/8-T0-4321-F
A3R67	0698-4478	3	1	RESISTOR 10.7K 1% .125W F TC=0+-100	24546	C4-1/8-T0-1072-F
A3R68	2100-3207	1	1	RESISTOR-TRMR 5K 10% C SIDE-ADJ 1-TRN	28480	2100-3207
A3R69	0698-3136	8	1	RESISTOR 17.8K 1% .125W F TC=0+-100	24546	C4-1/8-T0-1782-F
A3R70	0698-3497	4	1	RESISTOR 6.04K 1% .125W F TC=0+-100	24546	C4-1/8-T0-604R-F
A3R72	0683-4705	8		RESISTOR 47 5% .25W FC TC=-400/+500	01121	CB4705
A3R73	0698-3442	9	1	RESISTOR 237 1% .125W F TC=0+-100	24546	C4-1/8-T0-237R-F
A3R76	0683-4705	8		RESISTOR 47 5% .25W FC TC=-400/+500	01121	CB4705
A3R77	0698-4402	3	4	RESISTOR 97.6 1% .125W F TC=0+-100	24546	C4-1/8-T0-97R6-F
A3R78	0698-4402	3		RESISTOR 97.6 1% .125W F TC=0+-100	24546	C4-1/8-T0-97R6-F
A3R79	0698-3279	0		RESISTOR 4.99K 1% .125W F TC=0+-100	24546	C4-1/8-T0-4991-F
A3R80	0698-3581	7	2	RESISTOR 13.7K 1% .125W F TC=0+-100	24546	C4-1/8-T0-1372-F
A3R81	0698-3581	7		RESISTOR 13.7K 1% .125W F TC=0+-100	24546	C4-1/8-T0-1372-F
A3R82	0757-0273	4	7	RESISTOR 3.01K 1% .125W F TC=0+-100	24546	C4-1/8-T0-3011-F
A3R83	0757-0273	4		RESISTOR 3.01K 1% .125W F TC=0+-100	24546	C4-1/8-T0-3011-F
A3R84	0757-0273	4		RESISTOR 3.01K 1% .125W F TC=0+-100	24546	C4-1/8-T0-3011-F
A3R85	0698-4402	3		RESISTOR 97.6 1% .125W F TC=0+-100	24546	C4-1/8-T0-97R6-F
A3R86	0698-3157	3	1	RESISTOR 19.6K 1% .125W F TC=0+-100	24546	C4-1/8-T0-1962-F
A3R87	0683-1025	9		RESISTOR 1K 5% .25W FC TC=-400/+600	01121	CB1025
A3R88	0683-2225	3		RESISTOR 2.2K 5% .25W FC TC=-400/+700	01121	CB2225
A3R90	0698-4402	3		RESISTOR 97.6 1% .125W F TC=0+-100	24546	C4-1/8-T0-97R6-F
A3R91	0698-4467	0	1	RESISTOR 1.05K 1% .125W F TC=0+-100	24546	C4-1/8-T0-1051-F
A3R92	0683-1025	9		RESISTOR 1K 5% .25W FC TC=-400/+600	01121	CB1025
A3R93	0683-4705	8		RESISTOR 47 5% .25W FC TC=-400/+500	01121	CB4705
A3R101	0683-4715	0		RESISTOR 470 5% .25W FC TC=-400/+600	01121	CB4715
A3R102	0757-0291	6	1	RESISTOR 24.9 1% .125W F TC=0+-100	19701	MF4C1/8-T0-24R9-F
A3R103	0683-3325	6	6	RESISTOR 3.3K 5% .25W FC TC=-400/+700	01121	CB3325
A3R104	0757-0397	5	1	RESISTOR 82.5 1% .125W F TC=0+-100	24546	C4-1/8-T0-82R5-F
A3R106	0698-4435	2	2	RESISTOR 2.49K 1% .125W F TC=0+-100	24546	C4-1/8-T0-2491-F
A3R107	0698-3156	2		RESISTOR 14.7K 1% .125W F TC=0+-100	24546	C4-1/8-T0-1472-F
A3R108	0698-4037	0	2	RESISTOR 46.4 1% .125W F TC=0+-100	24546	C4-1/8-T0-46R4-F
A3R109	0757-0279	0		RESISTOR 3.16K 1% .125W F TC=0+-100	24546	C4-1/8-T0-3161-F
A3R111	0757-0279	0		RESISTOR 3.16K 1% .125W F TC=0+-100	24546	C4-1/8-T0-3161-F
A3R112	0757-0407	6		RESISTOR 200 1% .125W F TC=0+-100	24546	C4-1/8-T0-201-F
A3R113	0698-3444	1	4	RESISTOR 316 1% .125W F TC=0+-100	24546	C4-1/8-T0-316R-F
A3R114	0698-3444	1		RESISTOR 316 1% .125W F TC=0+-100	24546	C4-1/8-T0-316R-F
A3R115	2100-0568	1	1	RESISTOR-TRMR 100 10% C TOP-ADJ 1-TRN	28480	2100-0568
A3R116	0757-0381	5	1	RESISTOR 15 1% .125W F TC=0+-100	19701	MF4C1/8-T0-15R0-F
A3R117	0698-3444	1		RESISTOR 316 1% .125W F TC=0+-100	24546	C4-1/8-T0-316R-F
A3R118	0698-3444	1		RESISTOR 316 1% .125W F TC=0+-100	24546	C4-1/8-T0-316R-F
A3R119	0757-0275	6	2	RESISTOR 113 1% .125W F TC=0+-100	24546	C4-1/8-T0-113R-F
A3R120	0698-3440	7	3	RESISTOR 196 1% .125W F TC=0+-100	24546	C4-1/8-T0-196R-F
A3R121	0757-0397	3		RESISTOR 68.1 1% .125W F TC=0+-100	24546	C4-1/8-T0-68R1-F
A3R122	0757-0397	3		RESISTOR 68.1 1% .125W F TC=0+-100	24546	C4-1/8-T0-68R1-F
A3R123	0757-0275	6		RESISTOR 113 1% .125W F TC=0+-100	24546	C4-1/8-T0-113R-F
A3R151	0757-0397	3		RESISTOR 68.1 1% .125W F TC=0+-100	24546	C4-1/8-T0-68R1-F
A3R153	0683-1025	9		RESISTOR 1K 5% .25W FC TC=-400/+600	01121	CB1025
A3R154	0683-1025	9		RESISTOR 1K 5% .25W FC TC=-400/+600	01121	CB1025
A3R156	0683-1015	7		RESISTOR 100 5% .25W FC TC=-400/+500	01121	CB1015
A3R157	0683-4705	8		RESISTOR 47 5% .25W FC TC=-400/+500	01121	CB4705
A3R158	0698-3439	4		RESISTOR 178 1% .125W F TC=0+-100	24546	C4-1/8-T0-178R-F
A3R159	0683-2225	3		RESISTOR 2.2K 5% .25W FC TC=-400/+700	01121	CB2225
A3R160	0757-0276	7	3	RESISTOR 61.9 1% .125W F TC=0+-100	24546	C4-1/8-T0-6192-F
A3R161	0757-0276	7		RESISTOR 61.9 1% .125W F TC=0+-100	24546	C4-1/8-T0-6192-F
A3T1	9100-4038	5	1	TRANSFORMER BEAD CORE; WITH CT PRI & SEC	28480	9100-4038
A3T2	08552-6044	1	1	TRANS 6 TURNS	28480	08552-6044
A3U1	1820-1991	1	1	IC CNTR TTL LS DECD DUAL 4-BIT	01295	SN74LS390N
A3U2	1820-0629	0	10	IC FF TTL S J-K NEG-EDGE-TRIG	01295	SN74S112N
A3U3	1820-0321	9	2	IC COMPARATOR GP TO-99 PKG	01295	SN72710L
A3U4	1820-1199	1	3	IC INV TTL LS HEX 1-INP	01295	SN74LS04N
A3U5	1820-0693	8	6	IC FF TTL S D-TYPE POS-EDGE-TRIG	01295	SN74S74N
A3U6	1820-0683	6	3	IC INV TTL S HEX 1-INP	01295	SN74S04N
A3U7	1820-1924	0	1	IC INV TTL S HEX	18324	N8T93N
A3U8	1826-0043	4	2	IC OP AMP GP TO-99 PKG	3L585	CA307T
A3U9	1820-1568	8	3	IC BFR TTL LS BUS QUAD	01295	SN74LS125AN
A3U10	1820-1195	7	4	IC FF TTL LS D-TYPE POS-EDGE-TRIG COM	01295	SN74LS175N

See introduction to this section for ordering information
*Indicates factory selected value

Replaceable Parts

Table 6-3. Replaceable Parts

Reference Designation	HP Part Number	C D	Qty	Description	Mfr Code	Mfr Part Number
A3U11	1826-0437	0	1	IC MULTIPLIER 14-DIP-C PKG	04713	MC1495L
A3U12	1826-0476	7	3	IC SWITCH ANLG 8-DIP-P PKG	01295	TL601CP
A3U13	1826-0547	3	1	IC OP AMP LOW-BIAS-H-IMPD DUAL 8-DIP-P	01295	TL072ACP
A3U14	1858-0063	5	2	TRANSISTOR ARRAY 14-PIN PLSTC DIP	3L585	CA3102E
A3U15	1858-0040	8	1	TRANSISTOR ARRAY 16-PIN PLSTC DIP	3L585	CA3127E
A3U16	1858-0059	9	1	TRANSISTOR ARRAY 8-PIN PLSTC DIP	28480	1858-0059
A3U17	1820-0802	1	2	IC GATE ECL NOR QUAD 2-INP	04713	MC10102P
A3U18	1820-1322	2	2	IC GATE TTL S NOR QUAD 2-INP	01295	SN74S02N
A3U19	1820-0629	0		IC FF TTL S J-K NEG-EDGE-TRIG	01295	SN74S112N
A3U20	1820-0216	1	2	IC OP AMP GP 8-DIP-P PKG	28480	1820-0216
A3Y1	0410-1115	1	1	CRYSTAL-QUARTZ 30.00000 MHZ	28480	0410-1115
	0360-1715	0	1	TERMINAL-STUD SGL-PIN PRESS-MTG	28480	0360-1715
	1251-0600	0		CONNECTOR-SGL CONT PIN 1.14-MM-BSC-SZ SQ	28480	1251-0600
	3050-0080	6	4	WASHER-FL NM NO. 5 .13-IN-ID .25-IN-OD	28480	3050-0080
	7121-1234	9		LABEL CAUTION 1.925-IN-WD 2.24-IN-LG	28480	7121-1234
	8150-3375	5	1	RESISTOR-ZERO OHMS 22 AWG LEAD DIA	28480	8150-3375
A5	03325-66505	2	2	KEY BOARD ASSEMBLY	28480	03325-66505
A5C1	0160-3847	9		CAPACITOR-FXD .01UF +100-0% 50VDC CER	28480	0160-3847
A5C2	0160-3847	9		CAPACITOR-FXD .01UF +100-0% 50VDC CER	28480	0160-3847
A5C3	0160-3847	9		CAPACITOR-FXD .01UF +100-0% 50VDC CER	28480	0160-3847
A5C4	0180-0062	6	1	CAPACITOR-FXD 300UF+75-10% 6VDC AL	28480	0180-0062
A5C5	0160-3847	9		CAPACITOR-FXD .01UF +100-0% 50VDC CER	28480	0160-3847
A5C6	0160-3847	9		CAPACITOR-FXD .01UF +100-0% 50VDC CER	28480	0160-3847
A5C7	0160-3847	9		CAPACITOR-FXD .01UF +100-0% 50VDC CER	28480	0160-3847
A5C8	0160-3847	9		CAPACITOR-FXD .01UF +100-0% 50VDC CER	28480	0160-3847
A5C9	0150-0012	3	6	CAPACITOR-FXD .01UF +-20% 1KVDC CER	56289	C023A102J103MS38
A5C10	0150-0012	3		CAPACITOR-FXD .01UF +-20% 1KVDC CER	56289	C023A102J103MS38
A5CR1	1990-0533	4	14	LED-LAMP LUM-INT=15MCD IF=20MA-MAX	28480	5082-4658
A5CR2	1990-0533	4		LED-LAMP LUM-INT=15MCD IF=20MA-MAX	28480	5082-4658
A5CR3	1990-0533	4		LED-LAMP LUM-INT=15MCD IF=20MA-MAX	28480	5082-4658
A5CR5	1990-0665	3	21	LED-LAMP LUM-INT=1MCD IF=20MA-MAX BVR=5V	28480	1990-0665
A5CR6	1990-0665	3		LED-LAMP LUM-INT=1MCD IF=20MA-MAX BVR=5V	28480	1990-0665
A5CR7	1990-0665	3		LED-LAMP LUM-INT=1MCD IF=20MA-MAX BVR=5V	28480	1990-0665
A5CR8	1990-0665	3		LED-LAMP LUM-INT=1MCD IF=20MA-MAX BVR=5V	28480	1990-0665
A5CR9	1990-0665	3		LED-LAMP LUM-INT=1MCD IF=20MA-MAX BVR=5V	28480	1990-0665
A5CR10	1990-0665	3		LED-LAMP LUM-INT=1MCD IF=20MA-MAX BVR=5V	28480	1990-0665
A5CR11	1990-0665	3		LED-LAMP LUM-INT=1MCD IF=20MA-MAX BVR=5V	28480	1990-0665
A5CR12	1990-0665	3		LED-LAMP LUM-INT=1MCD IF=20MA-MAX BVR=5V	28480	1990-0665
A5CR13	1990-0665	3		LED-LAMP LUM-INT=1MCD IF=20MA-MAX BVR=5V	28480	1990-0665
A5CR14	1990-0665	3		LED-LAMP LUM-INT=1MCD IF=20MA-MAX BVR=5V	28480	1990-0665
A5CR15	1990-0665	3		LED-LAMP LUM-INT=1MCD IF=20MA-MAX BVR=5V	28480	1990-0665
A5CR16	1990-0665	3		LED-LAMP LUM-INT=1MCD IF=20MA-MAX BVR=5V	28480	1990-0665
A5CR17	1990-0533	4		LED-LAMP LUM-INT=15MCD IF=20MA-MAX	28480	5082-4658
A5CR18	1990-0533	4		LED-LAMP LUM-INT=15MCD IF=20MA-MAX	28480	5082-4658
A5CR19	1990-0533	4		LED-LAMP LUM-INT=15MCD IF=20MA-MAX	28480	5082-4658
A5CR20	1990-0533	4		LED-LAMP LUM-INT=15MCD IF=20MA-MAX	28480	5082-4658
A5CR21	1990-0533	4		LED-LAMP LUM-INT=15MCD IF=20MA-MAX	28480	5082-4658
A5CR22	1990-0533	4		LED-LAMP LUM-INT=15MCD IF=20MA-MAX	28480	5082-4658
A5CR23	1990-0533	4		LED-LAMP LUM-INT=15MCD IF=20MA-MAX	28480	5082-4658
A5CR24	1990-0533	4		LED-LAMP LUM-INT=15MCD IF=20MA-MAX	28480	5082-4658
A5CR25	1990-0533	4		LED-LAMP LUM-INT=15MCD IF=20MA-MAX	28480	5082-4658
A5CR26	1990-0533	4		LED-LAMP LUM-INT=15MCD IF=20MA-MAX	28480	5082-4658
A5CR27	1990-0533	4		LED-LAMP LUM-INT=15MCD IF=20MA-MAX	28480	5082-4658
A5CR28	1990-0665	3		LED-LAMP LUM-INT=1MCD IF=20MA-MAX BVR=5V	28480	1990-0665
A5CR29	1990-0665	3		LED-LAMP LUM-INT=1MCD IF=20MA-MAX BVR=5V	28480	1990-0665
A5CR30	1990-0665	3		LED-LAMP LUM-INT=1MCD IF=20MA-MAX BVR=5V	28480	1990-0665
A5CR31	1990-0665	3		LED-LAMP LUM-INT=1MCD IF=20MA-MAX BVR=5V	28480	1990-0665
A5CR32	1990-0665	3		LED-LAMP LUM-INT=1MCD IF=20MA-MAX BVR=5V	28480	1990-0665
A5CR33	1990-0665	3		LED-LAMP LUM-INT=1MCD IF=20MA-MAX BVR=5V	28480	1990-0665
A5CR34	1990-0665	3		LED-LAMP LUM-INT=1MCD IF=20MA-MAX BVR=5V	28480	1990-0665
A5CR35	1990-0665	3		LED-LAMP LUM-INT=1MCD IF=20MA-MAX BVR=5V	28480	1990-0665
A5CR36	1990-0665	3		LED-LAMP LUM-INT=1MCD IF=20MA-MAX BVR=5V	28480	1990-0665
A5J1	1200-0473	8	2	SOCKET-IC 16-CONT DIP DIP-SLDR	28480	1200-0473
A5KS1	5041-0943	3	1	KEY CAP LOKAL	28480	5041-0943
A5KS2	5041-0384	6	6	KEYCAP-SMOKEPIPE	28480	5041-0384
A5KS3	5041-0384	6		KEYCAP-SMOKEPIPE	28480	5041-0384
A5KS4	5041-0384	6		KEYCAP-SMOKEPIPE	28480	5041-0384
A5KS5	5041-0918	2	1	KEY CAP-FREQ	28480	5041-0918
A5KS6	5041-0919	3	1	KEY CAP-AMPTD	28480	5041-0919
A5KS7	5041-0384	6		KEYCAP-SMOKEPIPE	28480	5041-0384
A5KS8	5041-0384	6		KEYCAP-SMOKEPIPE	28480	5041-0384
A5KS9	5041-0384	6		KEYCAP-SMOKEPIPE	28480	5041-0384
A5KS10	5041-0920	6	1	KEY CAP-PHASE	28480	5041-0920

See introduction to this section for ordering information
*Indicates factory selected value

Table 6-3. Replaceable Parts

Reference Designation	HP Part Number	C D	Qty	Description	Mfr Code	Mfr Part Number
A5KS11	5041-0921	7	1	KEY CAP-DCOFFSET	28480	5041-0921
A5KS12	5041-0451	8	1	KEYCAP-BLUEPIPE	28480	5041-0451
A5KS13	5041-0987	5	1	KEY CAP STORE	28480	5041-0987
A5KS14	5041-0817	0	1	KEY CAP-7	28480	5041-0817
A5KS15	5041-0818	1	1	KEY CAP-8	28480	5041-0818
A5KS16	5041-0816	9	1	KEY CAP-6	28480	5041-0816
A5KS17	5041-0925	1	1	KEY CAP-MHZ VOLT	28480	5041-0925
A5KS18	5041-0810	3	1	KEY CAP RECALL	28480	5041-0810
A5KS19	5041-0814	7	1	KEY CAP-4	28480	5041-0814
A5KS20	5041-0815	8	1	KEY CAP-5	28480	5041-0815
A5KS22	5041-0926	2	1	KEY CAP-KHZ MV	28480	5041-0926
A5KS23	5041-0946	6	1	KEY CAP CLEAR	28480	5041-0946
A5KS24	5041-0811	4	1	KEY CAP-1	28480	5041-0811
A5KS25	5041-0812	5	1	KEY CAP-2	28480	5041-0812
A5KS26	5041-0813	6	1	KEY CAP-3	28480	5041-0813
A5KS27	5041-0927	3	1	KEY CAP-HZ VRMS	28480	5041-0927
A5KS28	5041-0758	8	1	KEY CAP-DASH	28480	5041-0758
A5KS29	5041-0819	2	1	KEY CAP-0	28480	5041-0819
A5KS30	5041-0808	9	1	KEY CAP PERIOD	28480	5041-0808
A5KS31	5041-0929	5	1	KEY CAP-SEC	28480	5041-0929
A5KS32	5041-0928	4	1	KEY CAP-DEG	28480	5041-0928
A5KS33	5041-0756	6	2	KEY ARROW	28480	5041-0756
A5KS34	5041-0756	6		KEY ARROW	28480	5041-0756
A5KS35	5041-0922	8	2	KEY CAP-LEFT ARO	28480	5041-0922
A5KS36	5041-0922	8		KEY CAP-LEFT ARO	28480	5041-0922
A5KS37	5041-0318	6	5	LK CAP PTY GRAY	28480	5041-0318
A5KS38	5041-0318	6		LK CAP PTY GRAY	28480	5041-0318
A5KS39	5041-0318	6		LK CAP PTY GRAY	28480	5041-0318
A5KS40	5041-0318	6		LK CAP PTY GRAY	28480	5041-0318
A5KS41	5041-0318	6		LK CAP PTY GRAY	28480	5041-0318
A5KS42	5041-0418	7	1	KEYCAP-EBONYPIPE	28480	5041-0418
A5KS43	5041-0285	6	1	KEYCAP-PEARLPIPE	28480	5041-0285
A5KS44	5041-0944	4	1	KEY CAP PWR	28480	5041-0944
A5L1	9100-3334	2	2	INDUCTOR 25UH 10% .3D	28480	9100-3334
A5MP1	4040-1001	3	1	STRIP-PLASTIC .28-IN-WD .01-IN-THK	28480	4040-1001
A5MP2	4040-1307	2	1	REFLECTOR	28480	4040-1307
A5MP3	08505-40006	2	3	LED ANN GD	28480	08505-40006
A5Q1	1853-0016	8	8	TRANSISTOR PNP SI TO-92 PD=300MW	28480	1853-0016
A5Q2	1853-0016	8		TRANSISTOR PNP SI TO-92 PD=300MW	28480	1853-0016
A5Q3	1853-0016	8		TRANSISTOR PNP SI TO-92 PD=300MW	28480	1853-0016
A5Q4	1853-0016	8		TRANSISTOR PNP SI TO-92 PD=300MW	28480	1853-0016
A5Q5	1853-0016	8		TRANSISTOR PNP SI TO-92 PD=300MW	28480	1853-0016
A5Q6	1853-0016	8		TRANSISTOR PNP SI TO-92 PD=300MW	28480	1853-0016
A5Q7	1853-0016	8		TRANSISTOR PNP SI TO-92 PD=300MW	28480	1853-0016
A5Q8	1853-0016	8		TRANSISTOR PNP SI TO-92 PD=300MW	28480	1853-0016
A5R1	0683-2205	9	18	RESISTOR 22 5% .25W FC TC=-400/+500	01121	CB2205
A5R2	0683-2205	9		RESISTOR 22 5% .25W FC TC=-400/+500	01121	CB2205
A5R3	0683-2205	9		RESISTOR 22 5% .25W FC TC=-400/+500	01121	CB2205
A5R4	0683-2205	9		RESISTOR 22 5% .25W FC TC=-400/+500	01121	CB2205
A5R5	0683-2205	9		RESISTOR 22 5% .25W FC TC=-400/+500	01121	CB2205
A5R6	0683-2205	9		RESISTOR 22 5% .25W FC TC=-400/+500	01121	CB2205
A5R7	0683-2205	9		RESISTOR 22 5% .25W FC TC=-400/+500	01121	CB2205
A5R8	0683-2205	9		RESISTOR 22 5% .25W FC TC=-400/+500	01121	CB2205
A5R9	0683-1325	2	8	RESISTOR 1.3K 5% .25W FC TC=-400/+700	01121	CB1325
A5R10	0683-1325	2		RESISTOR 1.3K 5% .25W FC TC=-400/+700	01121	CB1325
A5R11	0683-1325	2		RESISTOR 1.3K 5% .25W FC TC=-400/+700	01121	CB1325
A5R12	0683-1325	2		RESISTOR 1.3K 5% .25W FC TC=-400/+700	01121	CB1325
A5R13	0683-1325	2		RESISTOR 1.3K 5% .25W FC TC=-400/+700	01121	CB1325
A5R14	0683-1325	2		RESISTOR 1.3K 5% .25W FC TC=-400/+700	01121	CB1325
A5R15	0683-1325	2		RESISTOR 1.3K 5% .25W FC TC=-400/+700	01121	CB1325
A5R16	0683-1325	2		RESISTOR 1.3K 5% .25W FC TC=-400/+700	01121	CB1325
A5R20	1810-0135	2	1	NETWORK-RES 6-SIP10.0K OHM X 5	28480	1810-0135
A5R21	1810-0164	7	2	NETWORK-RES 9-SIP4.7K OHM X 8	91637	CSP09C07-472J
A5R22	1810-0164	7		NETWORK-RES 9-SIP4.7K OHM X 8	91637	CSP09C07-472J
A5R23	1810-0055	5	3	NETWORK-RES 9-SIP10.0K OHM X 8	28480	1810-0055
A5S1	5060-9436	7	43	PUSHBUTTON SWITCH P.C. MOUNT	28480	5060-9436
A5S2	5060-9436	7		PUSHBUTTON SWITCH P.C. MOUNT	28480	5060-9436
A5S3	5060-9436	7		PUSHBUTTON SWITCH P.C. MOUNT	28480	5060-9436
A5S4	5060-9436	7		PUSHBUTTON SWITCH P.C. MOUNT	28480	5060-9436
A5S5	5060-9436	7		PUSHBUTTON SWITCH P.C. MOUNT	28480	5060-9436
A5S6	5060-9436	7		PUSHBUTTON SWITCH P.C. MOUNT	28480	5960-9436
A5S7	5060-9436	7		PUSHBUTTON SWITCH P.C. MOUNT	28480	5060-9436
A5S8	5060-9436	7		PUSHBUTTON SWITCH P.C. MOUNT	28480	5060-9436
A5S9	5060-9436	7		PUSHBUTTON SWITCH P.C. MOUNT	28480	5060-9436
A5S10	5060-9436	7		PUSHBUTTON SWITCH P.C. MOUNT	28480	5060-9436

See introduction to this section for ordering information
*Indicates factory selected value

Replaceable Parts

Table 6-3. Replaceable Parts

Reference Designation	HP Part Number	C D	Qty	Description	Mfr Code	Mfr Part Number
A5S11	5060-9436	7		PUSHBUTTON SWITCH P.C. MOUNT	28480	5060-9436
A5S12	5060-9436	7		PUSHBUTTON SWITCH P.C. MOUNT	28480	5060-9436
A5S13	5060-9436	7		PUSHBUTTON SWITCH P.C. MOUNT	28480	5060-9436
A5S14	5060-9436	7		PUSHBUTTON SWITCH P.C. MOUNT	28480	5060-9436
A5S15	5060-9436	7		PUSHBUTTON SWITCH P.C. MOUNT	28480	5060-9436
A5S16	5060-9436	7		PUSHBUTTON SWITCH P.C. MOUNT	28480	5060-9436
A5S17	5060-9436	7		PUSHBUTTON SWITCH P.C. MOUNT	28480	5060-9436
A5S18	5060-9436	7		PUSHBUTTON SWITCH P.C. MOUNT	28480	5060-9436
A5S19	5060-9436	7		PUSHBUTTON SWITCH P.C. MOUNT	28480	5060-9436
A5S20	5060-9436	7		PUSHBUTTON SWITCH P.C. MOUNT	28480	5060-9436
A5S21	5060-9436	7		PUSHBUTTON SWITCH P.C. MOUNT	28480	5060-9436
A5S22	5060-9436	7		PUSHBUTTON SWITCH P.C. MOUNT	28480	5060-9436
A5S23	5060-9436	7		PUSHBUTTON SWITCH P.C. MOUNT	28480	5060-9436
A5S24	5060-9436	7		PUSHBUTTON SWITCH P.C. MOUNT	28480	5060-9436
A5S25	5060-9436	7		PUSHBUTTON SWITCH P.C. MOUNT	28480	5060-9436
A5S26	5060-9436	7		PUSHBUTTON SWITCH P.C. MOUNT	28480	5060-9436
A5S27	5060-9436	7		PUSHBUTTON SWITCH P.C. MOUNT	28480	5060-9436
A5S28	5060-9436	7		PUSHBUTTON SWITCH P.C. MOUNT	28480	5060-9436
A5S29	5060-9436	7		PUSHBUTTON SWITCH P.C. MOUNT	28480	5060-9436
A5S30	5060-9436	7		PUSHBUTTON SWITCH P.C. MOUNT	28480	5060-9436
A5S31	5060-9436	7		PUSHBUTTON SWITCH P.C. MOUNT	28480	5060-9436
A5S32	5060-9436	7		PUSHBUTTON SWITCH P.C. MOUNT	28480	5060-9436
A5S33	5060-9436	7		PUSHBUTTON SWITCH P.C. MOUNT	28480	5060-9436
A5S34	5060-9436	7		PUSHBUTTON SWITCH P.C. MOUNT	28480	5060-9436
A5S35	5060-9436	7		PUSHBUTTON SWITCH P.C. MOUNT	28480	5060-9436
A5S36	5060-9436	7		PUSHBUTTON SWITCH P.C. MOUNT	28480	5060-9436
A5S37	5060-9436	7		PUSHBUTTON SWITCH P.C. MOUNT	28480	5060-9436
A5S38	5060-9436	7		PUSHBUTTON SWITCH P.C. MOUNT	28480	5060-9436
A5S39	5060-9436	7		PUSHBUTTON SWITCH P.C. MOUNT	28480	5060-9436
A5S40	5060-9436	7		PUSHBUTTON SWITCH P.C. MOUNT	28480	5060-9436
A5S41	5060-9436	7		PUSHBUTTON SWITCH P.C. MOUNT	28480	5060-9436
A5S42	5060-9436	7		PUSHBUTTON SWITCH P.C. MOUNT	28480	5060-9436
A5S43	5060-9436	7		PUSHBUTTON SWITCH P.C. MOUNT	28480	5060-9436
A5S44	3101-2441	6	1	SWITCH-PB DPDT ALTNG .5A 100VAC	28480	3101-2441
A5U1	1820-1200	5	2	IC INV TTL LS HEX	01295	SN74LS05N
A5U2	1858-0047	5	4	TRANSISTOR ARRAY 16-PIN PLSTC DIP	13606	ULN-2003A
A5U3	1820-1433	6	3	IC SHF-RGTR TTL LS R-S SERIAL-IN PRL-OUT	01295	SN74LS164N
A5U4	1858-0047	5		TRANSISTOR ARRAY 16-PIN PLSTC DIP	13606	ULN-2003A
A5U5	1820-1200	5		IC INV TTL LS HEX	01295	SN74LS05N
A5U6	1820-1433	6		IC SHF-RGTR TTL LS R-S SERIAL-IN PRL-OUT	01295	SN74LS164N
A5U7	1858-0047	5		TRANSISTOR ARRAY 16-PIN PLSTC DIP	13606	ULN-2003A
A5U8	1820-1568	8		IC BFR TTL LS BUS QUAD	01295	SN74LS125AN
A5U9	1820-1730	6	6	IC FF TTL LS D-TYPE POS-EDGE-TRIG COM	01295	SN74LS273N
A5U10	1990-0592	5	11	DISPLAY-NUM-SEG 1-CHAR .43-H	28480	5082-7653
A5U11	1990-0592	5		DISPLAY-NUM-SEG 1-CHAR .43-H	28480	5082-7653
A5U12	1990-0592	5		DISPLAY-NUM-SEG 1-CHAR .43-H	28480	5082-7653
A5U13	1990-0592	5		DISPLAY-NUM-SEG 1-CHAR .43-H	28480	5082-7653
A5U14	1990-0592	5		DISPLAY-NUM-SEG 1-CHAR .43-H	28480	5082-7653
A5U15	1990-0592	5		DISPLAY-NUM-SEG 1-CHAR .43-H	28480	5082-7653
A5U16	1990-0592	5		DISPLAY-NUM-SEG 1-CHAR .43-H	28480	5082-7653
A5U17	1990-0592	5		DISPLAY-NUM-SEG 1-CHAR .43-H	28480	5082-7653
A5U18	1990-0592	5		DISPLAY-NUM-SEG 1-CHAR .43-H	28480	5082-7653
A5U19	1990-0592	5		DISPLAY-NUM-SEG 1-CHAR .43-H	28480	5082-7653
A5U20	1990-0592	5		DISPLAY-NUM-SEG 1-CHAR .43-H	28480	5082-7653
A5XU10	1200-0638	7	11	SOCKET-IC 14-CONT DIP DIP-SLDR	28480	1200-0638
A5XU11	1200-0638	7		SOCKET-IC 14-CONT DIP DIP-SLDR	28480	1200-0638
A5XU12	1200-0638	7		SOCKET-IC 14-CONT DIP DIP-SLDR	28480	1200-0638
A5XU13	1200-0638	7		SOCKET-IC 14-CONT DIP DIP-SLDR	28480	1200-0638
A5XU14	1200-0638	7		SOCKET-IC 14-CONT DIP DIP-SLDR	28480	1200-0638
A5XU15	1200-0638	7		SOCKET-IC 14-CONT DIP DIP-SLDR	28480	1200-0638
A5XU16	1200-0638	7		SOCKET-IC 14-CONT DIP DIP-SLDR	28480	1200-0638
A5XU17	1200-0638	7		SOCKET-IC 14-CONT DIP DIP-SLDR	28480	1200-0638
A5XU18	1200-0638	7		SOCKET-IC 14-CONT DIP DIP-SLDR	28480	1200-0638
A5XU19	1200-0638	7		SOCKET-IC 14-CONT DIP DIP-SLDR	28480	1200-0638
A5XU20	1200-0638	7		SOCKET-IC 14-CONT DIP DIP-SLDR	28480	1200-0638
	0624-0227	7	10	SCREW-TPG 4-40 .25-IN-LG PAN-HD-POZI STL	00000	ORDER BY DESCRIPTION
	0890-0164	4	1	SLEEVING-FLEX .04-ID NEMA-3 .019-WALL	00000	ORDER BY DESCRIPTION
	1460-1336	4	24	WIREFORM CU BRT-TIN	28480	1460-1336
	7121-1234	9		LABEL CAUTION 1.925-IN-WD 2.24-IN-LG	28480	7121-1234
	JUMPER	0		CUT JUMPER	28480	JUMPER
A6	03325-66506	3	2	CONTROL ASSEMBLY	28480	03325-66506
A6C1	0160-0978	1	1	CAPACITOR-FXD 1500PF +-1% 500VDC MICA	28480	0160-0978
A6C2	0160-3847	9		CAPACITOR-FXD .01UF +100-0% 50VDC CER	28480	0160-3847
A6C3	0160-0337	6	2	CAPACITOR-FXD 160PF +-1% 300VDC MICA	28480	0160-0337
A6C4	0160-0337	6		CAPACITOR-FXD 160PF +-1% 300VDC MICA	28480	0160-0337
A6C5	0160-3847	9		CAPACITOR-FXD .01UF +100-0% 50VDC CER	28480	0160-3847

See introduction to this section for ordering information
*Indicates factory selected value

Replaceable Parts

Table 6-3. Replaceable Parts

Reference Designation	HP Part Number	C D	Qty	Description	Mfr Code	Mfr Part Number
A6C6	0180-0228	6		CAPACITOR-FXD 22UF+-10% 15VDC TA	56289	150D226X9015B2
A6C7	0160-3847	9		CAPACITOR-FXD .01UF +100-0% 50VDC CER	28480	0160-3847
A6C20	0160-3847	9		CAPACITOR-FXD .01UF +100-0% 50VDC CER	28480	0160-3847
A6C21	0160-3847	9		CAPACITOR-FXD .01UF +100-0% 50VDC CER	28480	0160-3847
A6C22	0160-3847	9		CAPACITOR-FXD .01UF +100-0% 50VDC CER	28480	0160-3847
A6C23	0160-3847	9		CAPACITOR-FXD .01UF +100-0% 50VDC CER	28480	0160-3847
A6C24	0160-3847	9		CAPACITOR-FXD .01UF +100-0% 50VDC CER	28480	0160-3847
A6C25	0160-3847	9		CAPACITOR-FXD .01UF +100-0% 50VDC CER	28480	0160-3847
A6C26	0160-3847	9		CAPACITOR-FXD .01UF +100-0% 50VDC CER	28480	0160-3847
A6C27	0160-3847	9		CAPACITOR-FXD .01UF +100-0% 50VDC CER	28480	0160-3847
A6C28	0160-3847	9		CAPACITOR-FXD .01UF +100-0% 50VDC CER	28480	0160-3847
A6C29	0160-3847	9		CAPACITOR-FXD .01UF +100-0% 50VDC CER	28480	0160-3847
A6C30	0160-3847	9		CAPACITOR-FXD .01UF +100-0% 50VDC CER	28480	0160-3847
A6C31	0160-3847	9		CAPACITOR-FXD .01UF +100-0% 50VDC CER	28480	0160-3847
A6C32	0160-3847	9		CAPACITOR-FXD .01UF +100-0% 50VDC CER	28480	0160-3847
A6C33	0160-3847	9		CAPACITOR-FXD .01UF +100-0% 50VDC CER	28480	0160-3847
A6C34	0160-3847	9		CAPACITOR-FXD .01UF +100-0% 50VDC CER	28480	0160-3847
A6C35	0160-3847	9		CAPACITOR-FXD .01UF +100-0% 50VDC CER	28480	0160-3847
A6C36	0180-2823	1		CAPACITOR-FXD 470UF+50-10% 6.3VDC AL	28480	0180-2823
A6C37	0180-2823	1		CAPACITOR-FXD 470UF+50-10% 6.3VDC AL	28480	0180-2823
A6C38	0180-0692	8	3	CAPACITOR-FXD 220UF+50-10% 35VDC AL	00494	35VBSL220
A6C39	0180-0692	8		CAPACITOR-FXD 220UF+50-10% 35VDC AL	00494	35VBSL220
A6C40	0180-2823	1		CAPACITOR-FXD 470UF+50-10% 6.3VDC AL	28480	0180-2823
A6C41	0160-3847	9		CAPACITOR-FXD .01UF +100-0% 50VDC CER	28480	0160-3847
A6C52	0180-2823	1		CAPACITOR-FXD 470UF+50-10% 6.3VDC AL	28480	0180-2823
A6C53	0180-2826	4	1	CAPACITOR-FXD 1000UF+50-10% 16VDC AL	28480	0180-2826
A6C54	0160-3558	9		CAPACITOR-FXD .1UF +-20% 50VDC CER	28480	0160-3558
A6C55	0160-3558	9		CAPACITOR-FXD .1UF +-20% 50VDC CER	28480	0160-3558
A6C56	0160-3847	9		CAPACITOR-FXD .01UF +100-0% 50VDC CER	28480	0160-3847
A6C57	0160-3847	9		CAPACITOR-FXD .01UF +100-0% 50VDC CER	28480	0160-3847
A6C58	0160-3622	8	3	CAPACITOR-FXD .1UF +80-20% 100VDC CER	26654	2130Y5V100R104Z
A6C59	0160-3622	8		CAPACITOR-FXD .1UF +80-20% 100VDC CER	26654	2130Y5V100R104Z
A6C60	0160-3622	8		CAPACITOR-FXD .1UF +80-20% 100VDC CER	26654	2130Y5V100R104Z
A6C61	0160-2009	3	2	CAPACITOR-FXD 820PF +-5% 300VDC MICA	28480	0160-2009
A6C62	0160-2009	3		CAPACITOR-FXD 820PF +-5% 300VDC MICA	28480	0160-2009
A6C63	0160-3558	9		CAPACITOR-FXD .1UF +-20% 50VDC CER	28480	0160-3558
A6C64	0160-3558	9		CAPACITOR-FXD .1UF +-20% 50VDC CER	28480	0160-3558
A6CR1	1902-3153	5	1	DIODE-ZNR 9.31V 2% DO-35 PD=.4W	28480	1902-3153
A6CR2	1901-0040	1		DIODE-SWITCHING 30V 50MA 2NS DO-35	28480	1901-0040
A6CR4	1901-0040	1		DIODE-SWITCHING 30V 50MA 2NS DO-35	28480	1901-0040
A6CR5	1901-0040	1		DIODE-SWITCHING 30V 50MA 2NS DO-35	28480	1901-0040
A6J1	1200-0473	8		SOCKET-IC 16-CONT DIP DIP-SLDR	28480	1200-0473
A6J2	1251-6567	0		CONNECTOR 21-PIN M POST TYPE	28480	1251-6567
A6J3	1251-6567	0		CONNECTOR 21-PIN M POST TYPE	28480	1251-6567
A6J4	1251-6567	0		CONNECTOR 21-PIN M POST TYPE	28480	1251-6567
A6J51	1200-0634	3	1	SOCKET-IC 24-CONT DIP DIP-SLDR	28480	1200-0634
A6L1	9100-2459	0	1	INDUCTOR RF-CH-MLD 121UH 1% .166DX.385LG	28480	9100-2459
A6L2	9100-1637	4	1	INDUCTOR RF-CH-MLD 120UH 5% .166DX.385LG	28480	9100-1637
A6L3	9100-3334	2		INDUCTOR 250H 10% .3D	28480	9100-3334
A6MP1	1205-0298	5	3	HEAT SINK PLSTC-PWR-CS	28480	1205-0298
A6MP2	0340-0564	3	5	INSULATOR-XSTR THRM-CNDCT	28480	0340-0564
A6MP3	1258-0141	8		Connector-Shorting	28480	1258-0141
A6P5	1251-3750	7		CONNECTOR 10-PIN M POST TYPE	28480	1251-3750
A6P26	1251-4822	6		CONNECTOR 3-PIN M POST TYPE	28480	1251-4822
A6P52	1251-4245	7	1	CONNECTOR 2-PIN M POST TYPE	28480	1251-4245
A6Q1	1854-0071	7		TRANSISTOR NPN SI PD=300MW FT=200MHZ	28480	1854-0071
A6Q2	1854-0215	1		TRANSISTOR NPN SI PD=350MW FT=300MHZ	04713	2N3904
A6R1	0698-8344	0	1	RESISTOR 604K 1% .125W F TC=0+-100	28480	0698-8344
A6R2	0683-7525	6	1	RESISTOR 7.5K 5% .25W FC TC=-400/+700	01121	CB7525
A6R3	0683-6815	5	4	RESISTOR 680 5% .25W FC TC=-400/+600	01121	CB6815
A6R4	0683-1035	1		RESISTOR 10K 5% .25W FC TC=-400/+700	01121	CB1035
A6R5	0683-1035	1		RESISTOR 10K 5% .25W FC TC=-400/+700	01121	CB1035
A6R6	1810-0055	5		NETWORK-RES 9-SIP10.0K OHM X 8	28480	1810-0055
A6R7	0698-3279	0		RESISTOR 4.99K 1% .125W F TC=0+-100	24546	C4-1/8-T0-4991-F
A6R8	0698-4020	1	1	RESISTOR 9.53K 1% .125W F TC=0+-100	24546	C4-1/8-T0-9531-F
A6R9	1810-0076	0	1	NETWORK-RES 9-SIP1.8K OHM X 8	28480	1810-0076
A6R10	0683-1825	7	2	RESISTOR 1.8K 5% .25W FC TC=-400/+700	01121	CB1825
A6R13	1810-0140	9	1	NETWORK-RES 4-SIP22.0K OHM X 3	91637	CSP04C07-223J
A6R14	0683-1035	1		RESISTOR 10K 5% .25W FC TC=-400/+700	01121	CB1035
A6R15	0683-3625	9	2	RESISTOR 3.6K 5% .25W FC TC=-400/+700	01121	CB3625
A6R16	0683-3625	9		RESISTOR 3.6K 5% .25W FC TC=-400/+700	01121	CB3625
A6R17	1810-0229	5	1	NETWORK-RES 8-SIP330.0 OHM X 7	01121	208A331

See introduction to this section for ordering information
*Indicates factory selected value

Replaceable Parts

Table 6-3. Replaceable Parts

Reference Designation	HP Part Number	C D	Qty	Description	Mfr Code	Mfr Part Number
A6R18	1810-0055	5		NETWORK-RES 9-SIP10.0K OHM X 8	28480	1810-0055
A6R19	0683-1515	2	2	RESISTOR 150 5% .25W FC TC=-400/+600	01121	CB1515
A6R20	0683-1035	1		RESISTOR 10K 5% .25W FC TC=-400/+700	01121	CB1035
A6R21	0698-6619	8		RESISTOR 15K .1% .125W F TC=0+-25	28480	0698-6619
A6R22	0699-0107	9	1	RESISTOR 4.75K .1% .125W F TC=0+-25	28480	0699-0107
A6R23	0683-5115	6	4	RESISTOR 510 5% .25W FC TC=-400/+600	01121	CB5115
A6R24	0683-5115	6		RESISTOR 510 5% .25W FC TC=-400/+600	01121	CB5115
A6R25	0683-1035	1		RESISTOR 10K 5% .25W FC TC=-400/+700	01121	CB1035
A6R26	0683-1835	9	2	RESISTOR 18K 5% .25W FC TC=-400/+800	01121	CB1835
A6R51	1810-0136	3	1	NETWORK-RES 10-SIP MULTI-VALUE	28480	1810-0136
A6R52	1810-0297	7	1	NETWORK-RES 8-SIP3.3K OHM X 7	28480	1810-0297
A6R53	0683-1035	1		RESISTOR 10K 5% .25W FC TC=-400/+700	01121	CB1035
A6R54	0683-5115	6		RESISTOR 510 5% .25W FC TC=-400/+600	01121	CB5115
A6R55	0683-5115	6		RESISTOR 510 5% .25W FC TC=-400/+600	01121	CB5115
A6S1	3101-1026	9	1	SWITCH-TGL DIP-RKR-ASSY 7-1A .1A 5VDC	28480	3101-1026
A6U1	1818-0702	5	1	IC NMOS 32768 (32K) ROM 450-NS 3-S	55576	SYP2332 MASKED
A6U2	1818-0703	6	1	IC NMOS 32768 (32K) ROM 450-NS 3-S	55576	SYP2332 MASKED
A6U3	1818-0704	7	1	IC NMOS 32768 (32K) ROM 450-NS 3-S	55576	SYP2332 MASKED
A6U4	1818-0705	8	1	IC NMOS 32768 (32K) ROM 450-NS 3-S	55576	SYP2332 MASKED
A6U5	1820-1197	9	9	IC GATE TTL LS NAND QUAD 2-INP	01295	SN74LS00N
A6U6	1818-0438	4	1	IC NMOS 4096 (4K) STAT RAM 450-NS 3-S	01295	TMS2114-45NL
A6U7	1820-1195	7		IC FF TTL LS D-TYPE POS-EDGE-TRIG COM	01295	SN74LS175N
A6U8	1826-0180	0	1	IC TIMER TTL MONO/ASTBL	01295	NE555P
A6U9	1820-1691	8	1	IC MICPROC NMOS	28480	1820-1691
A6U10	1820-1759	9	6	IC BFR TTL LS NON-INV OCTL	27014	DM81LS97N
A6U11	1818-0199	4	2	IC NMOS 1024 (1K) STAT RAM 500-NS	34335	AM9112APC
A6U12	1818-0199	4		IC NMOS 1024 (1K) STAT RAM 500-NS	34335	AM9112APC
A6U13	1820-1195	7		IC FF TTL LS D-TYPE POS-EDGE-TRIG COM	01295	SN74LS175N
A6U14	1820-1196	8	6	IC FF TTL LS D-TYPE POS-EDGE-TRIG COM	01295	SN74LS174N
A6U15	1820-0174	0	1	IC INV TTL HEX	01295	SN7404N
A6U16	1820-1216	3	4	IC DCDR TTL LS 3-TO-8-LINE 3-INP	01295	SN74LS138N
A6U17	1820-1216	3		IC DCDR TTL LS 3 TO-8-LINE 3-INP	01295	SN74LS138N
A6U18	1820-0683	6		IC INV TTL S HEX 1-INP	01295	SN74S04N
A6U19	1820-1759	9		IC BFR TTL LS NON-INV OCTL	27014	DM81LS97N
A6U20	1820-1194	6	2	IC CNTR TTL LS BIN UP/DOWN SYNCHRO	01295	SN74LS193N
A6U21	1820-1194	6		IC CNTR TTL LS BIN UP/DOWN SYNCHRO	01295	SN74LS193N
A6U22	1820-1759	9		IC BFR TTL LS NON-INV OCTL	27014	DM81LS97N
A6U23	1820-1197	9		IC GATE TTL LS NAND QUAD 2-INP	01295	SN74LS00N
A6U24	1820-1208	3	2	IC GATE TTL LS OR QUAD 2-INP	01295	SN74LS32N
A6U25	1820-1216	3		IC DCDR TTL LS 3-TO-8-LINE 3-INP	01295	SN74LS138N
A6U26	1820-1759	9		IC BFR TTL LS NON-INV OCTL	27014	DM81LS97N
A6U27	1820-1730	6		IC FF TTL LS D-TYPE POS-EDGE-TRIG COM	01295	SN74LS273N
A6U28	1820-1759	9		IC BFR TTL LS NON-INV OCTL	27014	DM81LS97N
A6U29	1820-1433	6		IC SHF-RGTR TTL LS R-S SERIAL-IN PRL-OUT	01295	SN74LS164N
A6U30	1820-1197	9		IC GATE TTL LS NAND QUAD 2-INP	01295	SN74LS00N
A6U31	1820-1208	3		IC GATE TTL LS OR QUAD 2-INP	01295	SN74LS32N
A6U32	1820-1195	7		IC FF TTL LS D-TYPE POS-EDGE-TRIG COM	01295	SN74LS175N
A6U33	1820-1197	9		IC GATE TTL LS NAND QUAD 2-INP	01295	SN74LS00N
A6U34	1820-1112	8	8	IC FF TTL LS D-TYPE POS-EDGE-TRIG	01295	SN74LS74AN
A6U35	1820-1568	8		IC BFR TTL LS BUS QUAD	01295	SN74LS125AN
A6U36	1820-0684	7	1	IC INV TTL S HEX 1-INP	01295	SN74S05N
A6U37	1820-1975+D	1	1	IC SN74LS165N	28480	1820-1975+D
A6U38	1820-1759	9		IC BFR TTL LS NON-INV OCTL	27014	DM81LS97N
A6U39	1820-1144	6	2	IC GATE TTL LS NOR QUAD 2-INP	01295	SN74LS02N
A6U40	1820-1197	1		IC INV TTL LS HEX 1-INP	01295	SN74LS04N
A6U41	1820-1206	1	1	IC GATE TTL LS NOR TPL 3-INP	01295	SN74LS27N
A6U42	1820-1112	8		IC FF TTL LS D-TYPE POS-EDGE-TRIG	01295	SN74LS74AN
A6U43	1820-1073	8	1	IC BFR TTL LS INV OCTL 2-INP	27014	DM81LS98N
A6U44	1820-0477	6	1	IC OP AMP GP B-DIP-P PKG	S0545	UPC301AC
A6U45	1820-1430	3	1	IC CNTR TTL LS BIN SYNCHRO POS-EDGE-TRIG	01295	SN74LS161AN
A6U46	1820-1197	9		IC GATE TTL LS NAND QUAD 2-INP	01295	SN74LS00N
A6U51	1990-0444	6	1	OPTO-ISOLATOR LED-PDIO/XSTR IF=25MA-MAX	28480	6N136
A6U52	1990-0577	6	2	OPTO-ISOLATOR LED-PDIO/XSTR IF=50MA-MAX	28480	5082-4355
A6U53	1990-0577	6		OPTO-ISOLATOR LED-PDIO/XSTR IF=50MA-MAX	28480	5082-4355
A6U54	1990-0461	7	2	OPTO-ISOLATOR LED-IC GATE IF=10MA-MAX	28480	5082-4364
A6U55	1990-0461	7		OPTO-ISOLATOR LED-IC GATE IF=10MA-MAX	28480	5082-4364
A6U56	1820-0621	2	2	IC BFR TTL NAND QUAD 2-INP	01295	SN7438N
A6U57	1820-1300	6	3	IC SHF-RGTR TTL LS R-S PRL-IN PRL-OUT	01295	SN74LS195AN
A6U58	1820-1300	6		IC SHF-RGTR TTL LS R-S PRL-IN PRL-OUT	01295	SN74LS195AN
A6U59	1820-1300	6		IC SHF-RGTR TTL LS R-S PRL-IN PRL-OUT	01295	SN74LS195AN
A6U60	1820-1416	5	2	IC SCHMITT-TRIG TTL LS INV HEX 1-INP	01295	SN74LS14N
A6U61	1820-1440	5	1	IC LCH TTL LS QUAD	01295	SN74LS279N
A6U62	1820-1197	9		IC GATE TTL LS NAND QUAD 2-INP	01295	SN74LS00N
A6U63	1820-1416	5		IC SCHMITT-TRIG TTL LS INV HEX 1-INP	01295	SN74LS14N
A6U64	1820-1112	8		IC FF TTL LS D-TYPE POS-EDGE-TRIG	01295	SN74LS74AN

See introduction to this section for ordering information
*Indicates factory selected value

Table 6-3. Replaceable Parts

Reference Designation	HP Part Number	C D	Qty	Description	Mfr Code	Mfr Part Number
A6U65	1826-0144	6	1	IC 7805 V RGLTR TO-220	04713	MC7805CP
A6U66	1820-1558	6	2	IC UART TTL QUAD	04713	MC3441AP
A6U67	1820-1558	6		IC UART TTL QUAD	04713	MC3441AP
A6U68	1820-1730	6		IC FF TTL LS D-TYPE POS-EDGE-TRIG COM	01295	SN74LS273N
A6U69	1820-0621	2		IC BFR TTL NAND QUAD 2-INP	01295	SN7438N
A6U70	1820-1197	9		IC GATE TTL LS NAND QUAD 2-INP	01295	SN74LS00N
A6U71	1820-1204	9	1	IC GATE TTL LS NAND DUAL 4-INP	01295	SN74LS20N
A6U72	1820-1197	9		IC GATE TTL LS NAND QUAD 2-INP	01295	SN74LS00N
A6U73	1820-1281	2	1	IC DCDR TTL LS 2-TO-4-LINE DUAL 2-INP	01295	SN74LS139N
A6U74	1906-0096	7		DIODE-FW BRDG 200V 2A	04713	MDA202
A6U75	1820-1199	1		IC INV TTL LS HEX 1-INP	01295	SN74LS04N
A6V1	1970-0076	8	1	TUBE-ELECTRON SURGE V PTCTR	28480	1970-0076
	0360-1716	1	29	TERMINAL-STUD SGL-PIN PRESS-MTG	28480	0360-1716
	0624-0227	7		SCREW-TPG 4-40 .25-IN-LG PAN-HD-POZI STL	00000	ORDER BY DESCRIPTION
	0757-0443	0	1	RESISTOR 11K 1% .125W F TC=0+-100	24546	C4-1/8-T0-1102-F
	1251-4484	6	3	CONNECTOR 4-PIN M POST TYPE	28480	1251-4484
	1460-1336	4		WIREFORM CU BRT-TIN	28480	1460-1336
	2190-0913	9	2	WASHER-LK HLCL NO. 4 .115-IN-ID	28480	2190-0913
	2200-0143	0		SCREW-MACH 4-40 .375-IN-LG PAN-HD-POZI	28480	2200-0143
	2260-0001	5	2	NUT-HEX-DBL-CHAM 4-40-THD .094-IN-THK	28480	2260-0001
	3050-0105	6	2	WASHER-FL MTLC NO. 4 .125-IN-ID	28480	3050-0105
	3050-0440	2		WASHER-SHLDR NO. 4 .115-IN-ID .2-IN-OD	28480	3050-0440
	7120-6712	6		LABEL-WARNING .5-IN-WD 1-IN-LG MYLAR	28480	7120-6712
	7121-1234	9		LABEL-CAUTION 1.925-IN-WD 2.24-IN-LG	28480	7121-1234
A8	03325-66508	5	1	HIGH VOLTAGE OUTPUT ASSEMBLY (OPT 002)	28480	03325-66508
A8C1	0160-2055	9	3	CAPACITOR-FXD .01UF +80-20% 100VDC CER	28480	0160-2055
A8C2	0160-2055	9		CAPACITOR-FXD .01UF +80-20% 100VDC CER	28480	0160-2055
A8C3	0180-2803	7	2	CAPACITOR-FXD 100UF+50-10% 50VDC AL	28480	0180-2803
A8C4	0180-2803	7		CAPACITOR-FXD 100UF+50-10% 50VDC AL	28480	0180-2803
A8C5	0180-2822	0	2	CAPACITOR-FXD 10UF+50-10% 50VDC AL	28480	0180-2822
A8C6	0180-2822	0		CAPACITOR-FXD 10UF+50-10% 50VDC AL	28480	0180-2822
A8C7	0160-2257	3	3	CAPACITOR-FXD 10PF +-5% 500VDC CER 0+-60	28480	0160-2257
A8C8	0160-2257	3		CAPACITOR-FXD 10PF +-5% 500VDC CER 0+-60	28480	0160-2257
A8C11	0160-3847	9		CAPACITOR-FXD .01UF +100-0% 50VDC CER	28480	0160-3847
A8C12	0160-2244	8		CAPACITOR-FXD 3PF +-.25PF 500VDC CER	28480	0160-2244
A8C13	0160-2244	8		CAPACITOR-FXD 3PF +-.25PF 500VDC CER	28480	0160-2244
A8C14	0180-0210	6	4	CAPACITOR-FXD 3.3UF+-20% 15VDC TA	56289	150D335X0015A2
A8C15	0180-0210	6		CAPACITOR-FXD 3.3UF+-20% 15VDC TA	56289	150D335X0015A2
A8C16	0160-3558	9		CAPACITOR-FXD .1UF +-20% 50VDC CER	28480	0160-3558
A8C17	0160-3558	9		CAPACITOR-FXD .1UF +-20% 50VDC CER	28480	0160-3558
A8C18	0180-2825	3	2	CAPACITOR-FXD 22UF+50-10% 50VDC AL	28480	0180-2825
A8C21	0180-2825	3		CAPACITOR-FXD 22UF+50-10% 50VDC AL	28480	0180-2825
A8C22	0160-3558	9		CAPACITOR-FXD .1UF +-20% 50VDC CER	28480	0160-3558
A8C23	0160-3558	9		CAPACITOR-FXD .1UF +-20% 50VDC CER	28480	0160-3558
A8C24	0160-3558	9		CAPACITOR-FXD .1UF +-20% 50VDC CER	28480	0160-3558
A8C25	0160-3558	9		CAPACITOR-FXD .1UF +-20% 50VDC CER	28480	0160-3558
A8CR1	1902-3205	8	3	DIODE-ZNR 15V 5% DO-35 PD=.4W TC=+.057%	28480	1902-3205
A8CR2	1902-3205	8		DIODE-ZNR 15V 5% DO-35 PD=.4W TC=+.057%	28480	1902-3205
A8CR3	1901-0040	1		DIODE-SWITCHING 30V 50MA 2NS DO-35	28480	1901-0040
A8CR4	1901-0040	1		DIODE-SWITCHING 30V 50MA 2NS DO-35	28480	1901-0040
A8CR5	1901-0040	1		DIODE-SWITCHING 30V 50MA 2NS DO-35	28480	1901-0040
A8CR6	1902-3205	8		DIODE-ZNR 15V 5% DO-35 PD=.4W TC=+.057%	28480	1902-3205
A8CR7	1902-0244	9	1	DIODE-ZNR 30V 5% PD=1W IR=50UA	28480	1902-0244
A8CR8	1901-0040	1		DIODE-SWITCHING 30V 50MA 2NS DO-35	28480	1901-0040
A8CR11	1901-0040	1		DIODE-SWITCHING 30V 50MA 2NS DO-35	28480	1901-0040
A8CR12	1901-0040	1		DIODE-SWITCHING 30V 50MA 2NS DO-35	28480	1901-0040
A8CR13	1901-0040	1		DIODE-SWITCHING 30V 50MA 2NS DO-35	28480	1901-0040
A8CR14	1901-0040	1		DIODE-SWITCHING 30V 50MA 2NS DO-35	28480	1901-0040
A8CR15	1901-0040	1		DIODE-SWITCHING 30V 50MA 2NS DO-35	28480	1901-0040
A8CR16	1901-0050	3	7	DIODE-SWITCHING 80V 200MA 2NS DO-35	28480	1901-0050
A8CR17	1901-0050	3		DIODE-SWITCHING 80V 200MA 2NS DO-35	28480	1901-0050
A8F1	2110-0343	1	4	FUSE .25A 125V NTD .281X.093	28480	2110-0343
A8J20	1251-2969	8		CONNECTOR-PHONO SINGLE PHONO JACK; DIP	28480	1251-2969
A8J21	1251-2969	8		CONNECTOR-PHONO SINGLE PHONO JACK; DIP	28480	1251-2969
A8MP1	1205-0298	5		HEAT SINK PLSTC-PWR-CS	28480	1205-0298
A8MP2	1205-0011	0		HEAT SINK TO-5/TO-39-CS	28480	1205-0011
A8MP3	0340-0564	3		INSULATOR-XSTR THRM-CNDCT	28480	0340-0564
A8P1	1251-4246	8		CONNECTOR 3-PIN M POST TYPE	28480	1251-4246

See introduction to this section for ordering information
*Indicates factory selected value

Replaceable Parts

Table 6-3. Replaceable Parts

Reference Designation	HP Part Number	C D	Qty	Description	Mfr Code	Mfr Part Number
A8Q1	1854-0475	5	1	TRANSISTOR-DUAL NPN PD=750MW	28480	1854-0475
A8Q2	1854-0215	1		TRANSISTOR NPN SI PD=350MW FT=300MHZ	04713	2N3904
A8Q3	1853-0036	2	2	TRANSISTOR PNP SI PD=310MW FT=250MHZ	28480	1853-0036
A8Q4	1853-0042	0	2	TRANSISTOR PNP SI PD=310MW FT=200MHZ	28480	1853-0042
A8Q5	1854-0215	1		TRANSISTOR NPN SI PD=350MW FT=300MHZ	04713	2N3904
A8Q6	1854-0215	1		TRANSISTOR NPN SI PD=350MW FT=300MHZ	04713	2N3904
A8Q7	1853-0020	4	4	TRANSISTOR PNP SI PD=300MW FT=150MHZ	28480	1853-0020
A8Q8	1853-0020	4		TRANSISTOR PNP SI PD=300MW FT=150MHZ	28480	1853-0020
A8Q11	1854-0215	1		TRANSISTOR NPN SI PD=350MW FT=300MHZ	04713	2N3904
A8Q12	1853-0042	0		TRANSISTOR PNP SI PD=310MW FT=200MHZ	28480	1853-0042
A8Q13	1854-0215	1		TRANSISTOR NPN SI PD=350MW FT=300MHZ	04713	2N3904
A8Q14	1854-0692	8		TRANSISTOR NPN SI PD=15W FT=50MHZ	04713	MJE223
A8Q15	1853-0367	2	1	TRANSISTOR PNP SI PD=15W FT=50MHZ	04713	MJE233
A8R1	0698-3279	0		RESISTOR 4.99K 1% .125W F TC=0+-100	24546	C4-1/8-T0-4991-F
A8R2	0757-0458	7	1	RESISTOR 51.1K 1% .125W F TC=0+-100	24546	C4-1/8-T0-5112-F
A8R3	0757-0283	6		RESISTOR 2K 1% .125W F TC=0+-100	24546	C4-1/8-T0-2001-F
A8R4	0757-0283	6		RESISTOR 2K 1% .125W F TC=0+-100	24546	C4-1/8-T0-2001-F
A8R5	0683-4705	8		RESISTOR 47 5% .25W FC TC=-400/+500	01121	CB4705
A8R6	0683-4705	8		RESISTOR 47 5% .25W FC TC=-400/+500	01121	CB4705
A8R7	0698-3279	0		RESISTOR 4.99K 1% .125W F TC=0+-100	24546	C4-1/8-T0-4991-F
A8R8	0698-3223	4	1	RESISTOR 1.24K 1% .125W F TC=0+-100	24546	C4-1/8-T0-1241-F
A8R11	0698-4449	8	1	RESISTOR 309 1% .125W F TC=0+-100	24546	C4-1/8-T0-309R-F
A8R12	0698-6360	6		RESISTOR 10K .1% .125W F TC=0+-25	28480	0698-6360
A8R13	0698-6360	6		RESISTOR 10K .1% .125W F TC=0+-25	28480	0698-6360
A8R14	0698-4453	4	3	RESISTOR 402 1% .125W F TC=0+-100	24546	C4-1/8-T0-402R-F
A8R15	0698-4453	4		RESISTOR 402 1% .125W F TC=0+-100	24546	C4-1/8-T0-402R-F
A8R16	0683-1015	7		RESISTOR 100 5% .25W FC TC=-400/+500	01121	CB1015
A8R17	0683-1015	7		RESISTOR 100 5% .25W FC TC=-400/+500	01121	CB1015
A8R18	0683-1045	3		RESISTOR 100K 5% .25W FC TC=-400/+800	01121	CB1045
A8R21	0757-0273	4		RESISTOR 3.01K 1% .125W F TC=0+-100	24546	C4-1/8-T0-3011-F
A8R22	0698-4498	7	1	RESISTOR 53.6K 1% .125W F TC=0+-100	24546	C4-1/8-T0-5362-F
A8R23	0757-0273	4		RESISTOR 3.01K 1% .125W F TC=0+-100	24546	C4-1/8-T0-3011-F
A8R24	0683-4705	8		RESISTOR 47 5% .25W FC TC=-400/+500	01121	CB4705
A8R25	0683-4705	8		RESISTOR 47 5% .25W FC TC=-400/+500	01121	CB4705
A8R26	0683-3305	2	2	RESISTOR 33 5% .25W FC TC=-400/+500	01121	CB3305
A8R27	0683-3305	2		RESISTOR 33 5% .25W FC TC=-400/+500	01121	CB3305
A8R28	0683-3365	8	2	RESISTOR 3.6 5% .25W FC TC=-400/+500	01121	CB3665
A8R31	0757-0283	6		RESISTOR 2K 1% .125W F TC=0+-100	24546	C4-1/8-T0-2001-F
A8R32	0757-0472	5	2	RESISTOR 200K 1% .125W F TC=0+-100	24546	C4-1/8-T0-2003-F
A8R33	0757-0472	5		RESISTOR 200K 1% .125W F TC=0+-100	24546	C4-1/8-T0-2003-F
A8R34	0757-0283	6		RESISTOR 2K 1% .125W F TC=0+-100	24546	C4-1/8-T0-2001-F
A8R35	0683-3365	8		RESISTOR 3.6 5% .25W FC TC=-400/+500	01121	CB3665
A8R36	0683-5665	0	2	RESISTOR 5.6 5% .25W FC TC=-400/+500	01121	CB5665
A8R37	0683-5665	0		RESISTOR 5.6 5% .25W FC TC=-400/+500	01121	CB5665
A8R38	0683-2205	9		RESISTOR 22 5% .25W FC TC=-400/+500	01121	CB2205
A8U1	1906-0096	7		DIODE-FW BRDG 200V 2A	04713	MDA202
A8U2	1826-0464	3	1	IC V RGLTR TO-220	04713	MC78M15CP
A8U3	1826-0214	1	1	IC V RGLTR TO-220	04713	MC7915CT
	1251-0600	0		CONNECTOR-SGL CONT PIN 1.14-MM-BSC-SZ 50	28480	1251-0600
	2190-0004	9	1	WASHER-LK INTL T NO. 4 .115-IN-ID	28480	2190-0004
	2200-0147	4	1	SCREW-MACH 4-40 .5-IN-LG PAN-HD-POZI	28480	2200-0147
	2260-0002	6	1	NUT-HEX-DBL-CHAM 4-40-THD .062-IN-THK	28480	2260-0002
	2360-0113	2		SCREW-MACH 6-32 .25-IN-LG PAN-HD-POZI	00000	ORDER BY DESCRIPTION
	3050-0716	5	28	WASHER-FL MTLC NO. 5 .128-IN-ID	28480	3050-0716
	7121-1234	9		LABEL-CAUTION 1.925-IN-WD 2.24 IN-LG	28480	7121-1234
A9	03325-66509	6	1	CRYSTAL OVEN ASSEMBLY (OPTION 001)	28480	03325-66509
A9C1	0180-0692	8		CAPACITOR-FXD 220UF+50-10% 35VDC AL	00494	35VBSL220
A9C2	0160-3847	9		CAPACITOR-FXD .01UF +100-0% 50VDC CER	28480	0160-3847
A9C3	0160-3847	9		CAPACITOR-FXD .01UF +100-0% 50VDC CER	28480	0160-3847
A9C4	0180-0693	9	1	CAPACITOR-FXD 1000UF+50-10% 25VDC AL	00494	25VBSL1000
A9CR1	1901-0049	0	2	DIODE-PWR RECT 50V 750MA DO-29	28480	1901-0049
A9CR2	1901-0049	0		DIODE-PWR RECT 50V 750MA DO-29	28480	1901-0049
A9CR3	1902-0049	2	1	DIODE-ZNR 6.19V 5% DO-35 PD=.4W	28480	1902-0049
A9E1	0960-0465	7	1	OSCILLATOR 10MHZ	28480	0960-0465
A9J19	1251-2969	8		CONNECTOR-PHONO SINGLE PHONO JACK; DIP	28480	1251-2969
A9MP1	1205-0298	5		HEAT SINK PLSTC-PWR-CS	28480	1205-0298
A9MP2	0340-0564	3		INSULATOR-XSTR THRM-CNDCT	28480	0340-0564
A9P1	1251-4246	8		CONNECTOR 3-PIN M POST TYPE	28480	1251-4246

See introduction to this section for ordering information
*Indicates factory selected value

Table 6-3. Replaceable Parts

Reference Designation	HP Part Number	C D	Qty	Description	Mfr Code	Mfr Part Number
A9Q1	1854-0053	3	1	TRANSISTOR NPN 2N2218 SI TO-5 PD=800MW	04713	2N2218
A9Q2	1853-0458	4		TRANSISTOR PNP SI TO-220AB PD=60W	04713	MJE371K
A9R1	0683-1025	9		RESISTOR 1K 5% .25W FC TC=-400/+600	01121	CB1025
A9R2	0683-1035	1		RESISTOR 10K 5% .25W FC TC=-400/+700	01121	CB1035
A9R3	0683-3325	6		RESISTOR 3.3K 5% .25W FC TC=-400/+700	01121	CB3325
A9R4	0757-0290	5	1	RESISTOR 6.19K 1% .125W F TC=0+-100	19701	MF4C1/8-T0-6191-F
A9R5	0698-3498	5	1	RESISTOR 8.66K 1% .125W F TC=0+-100	24546	C4-1/8-T0-866R-F
A9R6	0698-3274	5	1	RESISTOR 10K 1% .125W F TC=0+-25	28480	0698-3274
A9R7	2100-3252	6	1	RESISTOR-TRMR 5k 10% C TOP-AD	28480	2100-3252
A9R8	0683-1015	7		RESISTOR 100 5% .25W FC TC=-400/+500	01121	CB1015
A9R9	0683-2025	1	2	RESISTOR 2K 5% .25W FC TC=-400/+700	01121	CB2025
A9U1	1820-0216	1		IC OP AMP GP 8-DIP-P PKG	28480	1820-0216
	03325-26509	2	1	PC BD-BLK(22212)	28480	03325-26509
	2190-0913	9		WASHER-LK HLCL NO. 4 .115-IN-ID	28480	2190-0913
	2200-0103	2	10	SCREW-MACH 4-40 .25-IN-LG PAN-HD-POZI	28480	2200-0103
	2200-0143	0		SCREW-MACH 4-40 .375-IN-LG PAN-HD-POZI	28480	2200-0143
	2260-0001	5		NUT-HEX-DBL-CHAM 4-40-THD .094-IN-THK	28480	2260-0001
	2360-0113	2		SCREW-MACH 6-32 .25-IN-LG PAN-HD-POZI	00000	ORDER BY DESCRIPTION
	3050-0105	6		WASHER-FL MTLC NO. 4 .125-IN-ID	28480	3050-0105
	3050-0440	2		WASHER-SHLDR NO. 4 .115-IN-ID .2-IN-OD	28480	3050-0440
	3050-0604	0	10	WASHER-FL MTLC 7/16 IN .5-IN-ID	28480	3050-0604
	3050-0716	5		WASHER-FL MTLC NO. 5 .128-IN-ID	28480	3050-0716
	7121-1234	9		LABEL-CAUTION 1.925-IN-WD 2.24-IN-LG	28480	7121-1234
A14	03325-66514	3	2	PC ASSY-FUNCTION	28480	03325-66514
A14C1	0180-1701	2		CAPACITOR-FXD 6.8UF+-20% 6VDC TA	56289	150D685X0006A2
A14C2	0160-3560	3	1	CAPACITOR-FXD 1UF +-2% 100VDC MET-POLYC	28480	0160-3560
A14C3	0160-3847	9		CAPACITOR-FXD .01UF +100-0% 50VDC CER	28480	0160-3847
A14C4	0160-4532	1	5	CAPACITOR-FXD 1000PF +-20% 50VDC CER	28480	0160-4532
A14C5	0180-1746	5		CAPACITOR-FXD 15UF+-10% 20VDC TA	56289	150D156X9020B2
A14C6	0180-1746	5		CAPACITOR-FXD 15UF+-10% 20VDC TA	56289	150D156X9020B2
A14C26	0160-3847	9		CAPACITOR-FXD .01UF +100-0% 50VDC CER	28480	0160-3847
A14C27	0160-3847	9		CAPACITOR-FXD .01UF +100-0% 50VDC CER	28480	0160-3847
A14C28	0160-3847	9		CAPACITOR-FXD .01UF +100-0% 50VDC CER	28480	0160-3847
A14C29	0160-4571	8		CAPACITOR-FXD .1UF +80-20% 50VDC CER	28480	0160-4571
A14C31	0160-3847	9		CAPACITOR-FXD .01UF +100-0% 50VDC CER	28480	0160-3847
A14C32	0160-3847	9		CAPACITOR-FXD .01UF +100-0% 50VDC CER	28480	0160-3847
A14C33	0160-3466	8	4	CAPACITOR-FXD 100PF +-10% 1KVDC CER	28480	0160-3466
A14C34	0160-4532	1		CAPACITOR-FXD 1000PF +-20% 50VDC CER	28480	0160-4532
A14C35	0160-4571	8		CAPACITOR-FXD .1UF +80-20% 50VDC CER	28480	0160-4571
A14C36	0160-0162	5	2	CAPACITOR-FXD .022UF +-10% 200VDC POLYE	28480	0160-0162
A14C37	0160-0162	5		CAPACITOR-FXD .022UF +-10% 200VDC POLYE	28480	0160-0162
A14C38	0160-3847	9		CAPACITOR-FXD .01UF +100-0% 50VDC CER	28480	0160-3847
A14C39	0160-3847	9		CAPACITOR-FXD .01UF +100-0% 50VDC CER	28480	0160-3847
A14C41	0160-4571	8		CAPACITOR-FXD .1UF +80-20% 50VDC CER	28480	0160-4571
A14C42	0160-4571	8		CAPACITOR-FXD .1UF +80-20% 50VDC CER	28480	0160-4571
A14C43	0160-4137	2	1	CAPACITOR-FXD .01UF +-1% 100VDC POLYSTY	84411	863UW
A14C44	0160-0128	3	2	CAPACITOR-FXD 2.2UF +-20% 50VDC CER	28480	0160-0128
A14C45	0160-0128	3		CAPACITOR-FXD 2.2UF +-20% 50VDC CER	28480	0160-0128
A14C46	0160-5335	4	3	CAPACITOR-FXD 1UF +-10% 100VDC MET-POLYE	28480	0160-5335
A14C47	0160-3847	9		CAPACITOR-FXD .01UF +100-0% 50VDC CER	28480	0160-3847
A14C48	0180-0210	6		CAPACITOR-FXD 3.3UF+-20% 15VDC TA	56289	150D335X0015A2
A14C49	0180-1746	5		CAPACITOR-FXD 15UF+-10% 20VDC TA	56289	150D156X9020B2
A14C50	0160-4571	8		CAPACITOR-FXD .1UF +80-20% 50VDC CER	28480	0160-4571
A14C61	0160-5335	4		CAPACITOR-FXD 1UF +-10% 100VDC MET-POLYE	28480	0160-5335
A14C62	0160-5335	4		CAPACITOR-FXD 1UF +-10% 100VDC MET-POLYE	28480	0160-5335
A14C63	0160-5306	9	4	CAPACITOR-FXD .1UF +-10% 100VDC	28480	0160-5306
A14C65	0160-5306	9		CAPACITOR-FXD .1UF +-10% 100VDC	28480	0160-5306
A14C66	0160-5306	9		CAPACITOR-FXD .1UF +-10% 100VDC	28480	0160-5306
A14C76	0160-4571	8		CAPACITOR-FXD .1UF +80-20% 50VDC CER	28480	0160-4571
A14C77	0160-3847	9		CAPACITOR-FXD .01UF +100-0% 50VDC CER	28480	0160-3847
A14C78	0160-3847	9		CAPACITOR-FXD .01UF +100-0% 50VDC CER	28480	0160-3847
A14C101*	0160-0145	4	1	CAPACITOR-FXD 82PF +-2% 100VDC MICA	28480	0160-0145
A14C102	0160-2201	7	1	CAPACITOR-FXD 51PF +-5% 300VDC MICA	28480	0160-2201
A14C103 *	0140-0217	9	1	CAPACITOR-FXD 140pF 300V	28480	0140-0217
A14C104	0160-3084	6	1	CAPACITOR-FXD 60PF +-2% 500VDC MICA	28480	0160-3084
A14C105	0160-2306	3	1	CAPACITOR-FXD 27PF +-5% 300VDC MICA	28480	0160-2306
A14C107	0140-0196	3	1	CAPACITOR-FXD 150PF +-5% 300VDC MICA	72136	DM15F151J0300WV1CR
A14C108	0160-3847	9		CAPACITOR-FXD .01UF +100-0% 50VDC CER	28480	0160-3847
A14C109	0160-3847	9		CAPACITOR-FXD .01UF +100-0% 50VDC CER	28480	0160-3847
A14C110	0121-0105	4	1	CAPACITOR-V TRMR-CER 9-35PF 200V PC-MTG	52763	304324 9/35PF N650
A14C111	0160-2250	6	4	CAPACITOR-FXD 5.1PF +-.25PF 500VDC CER	28480	0160-2250
A14C112	0160-3847	9		CAPACITOR-FXD .01UF +100-0% 50VDC CER	28480	0160-3847
A14C113	0160-3847	9		CAPACITOR-FXD .01UF +100-0% 50VDC CER	28480	0160-3847
A14C114	0160-4532	1		CAPACITOR-FXD 1000PF +-20% 50VDC CER	28480	0160-4532

See introduction to this section for ordering information
*Indicates factory selected value

Replaceable Parts

Table 6-3. Replaceable Parts

Reference Designation	HP Part Number	C D	Qty	Description	Mfr Code	Mfr Part Number
A14C116	0160-3847	9		CAPACITOR-FXD .01UF +100-0% 50VDC CER	28480	0160-3847
A14C117	0160-3847	9		CAPACITOR-FXD .01UF +100-0% 50VDC CER	28480	0160-3847
A14C118	0180-1746	5		CAPACITOR-FXD 15UF+-10% 20VDC TA	56289	150D156X9020B2
A14C119	0180-1746	5		CAPACITOR-FXD 15UF+-10% 20VDC TA	56289	150D156X9020B2
A14C121	0160-3847	9		CAPACITOR-FXD .01UF +100-0% 50VDC CER	28480	0160-3847
A14C122	0160-3847	9		CAPACITOR-FXD .01UF +100-0% 50VDC CER	28480	0160-3847
A14C124	0160-0299	9	1	CAPACITOR-FXD 1800PF +-10% 200VDC POLYE	28480	0160-0299
A14C126	0160-3847	9		CAPACITOR-FXD .01UF +100-0% 50VDC CER	28480	0160-3847
A14C127	0160-3847	9		CAPACITOR-FXD .01UF +100-0% 50VDC CER	28480	0160-3847
A14C128	0160-3847	9		CAPACITOR-FXD .01UF +100-0% 50VDC CER	28480	0160-3847
A14C129	0160-3847	9		CAPACITOR-FXD .01UF +100-0% 50VDC CER	28480	0160-3847
A14C130	0160-2240	4	3	CAPACITOR-FXD 2PF +-.25PF 500VDC CER	28480	0160-2240
A14C131	0160-3847	9		CAPACITOR-FXD .01UF +100-0% 50VDC CER	28480	0160-3847
A14C132	0160-3847	9		CAPACITOR-FXD .01UF +100-0% 50VDC CER	28480	0160-3847
A14C133	0160-2250	6		CAPACITOR-FXD 5.1PF +-.25PF 500VDC CER	28480	0160-2250
A14C134	0160-3847	9		CAPACITOR-FXD .01UF +100-0% 50VDC CER	28480	0160-3847
A14C135	0160-2240	4		CAPACITOR-FXD 2PF +-.25PF 500VDC CER	28480	0160-2240
A14C136	0160-3508	9		CAPACITOR-FXD 1UF +80-20% 50VDC CER	28480	0160-3508
A14C137	0160-4571	8		CAPACITOR-FXD .1UF +80-20% 50VDC CER	28480	0160-4571
A14C138	0160-4571	8		CAPACITOR-FXD .1UF +80-20% 50VDC CER	28480	0160-4571
A14C139	0160-3847	9		CAPACITOR-FXD .01UF +100-0% 50VDC CER	28480	0160-3847
A14C141	0160-4571	8		CAPACITOR-FXD .1UF +80-20% 50VDC CER	28480	0160-4571
A14C142	0160-0156	7	1	CAPACITOR-FXD 3900PF +-10% 200VDC POLYE	28480	0160-0156
A14C143	0160-0301	4	1	CAPACITOR-FXD .012UF +-10% 200VDC POLYE	28480	0160-0301
A14C144	0160-2414	4	1	CAPACITOR-FXD .022UF +-5% 200VDC POLYE	28480	0160-2414
A14C203	0160-3847	9		CAPACITOR-FXD .01UF +100-0% 50VDC CER	28480	0160-3847
A14C205	0160-3466	8		CAPACITOR-FXD 100PF +-10% 1KVDC CER	28480	0160-3466
A14C208	0160-3847	9		CAPACITOR-FXD .01UF +100-0% 50VDC CER	28480	0160-3847
A14C209	0160-3847	9		CAPACITOR-FXD .01UF +100-0% 50VDC CER	28480	0160-3847
A14C211	0160-3847	9		CAPACITOR-FXD .01UF +100-0% 50VDC CER	28480	0160-3847
A14C212	0160-3847	9		CAPACITOR-FXD .01UF +100-0% 50VDC CER	28480	0160-3847
A14C213	0160-4532	1		CAPACITOR-FXD 1000PF +-20% 50VDC CER	28480	0160-4532
A14C214	0160-4532	1		CAPACITOR-FXD 1000PF +-20% 50VDC CER	28480	0160-4532
A14C217	0121-0452	4	1	CAPACITOR-V TRMR-AIR 1.3-5.4PF 175V	74970	187-0103-028
A14C218	0160-4571	8		CAPACITOR-FXD .1UF +80-20% 50VDC CER	28480	0160-4571
A14C219	0180-1746	5		CAPACITOR-FXD 15UF+-10% 20VDC TA	56289	150D156X9020B2
A14C220	0160-4571	8		CAPACITOR-FXD .1UF +80-20% 50VDC CER	28480	0160-4571
A14C221	0160-3847	9		CAPACITOR-FXD .01UF +100-0% 50VDC CER	28480	0160-3847
A14C222	0160-2250	6		CAPACITOR-FXD 5.1PF +-.25PF 500VDC CER	28480	0160-2250
A14C223	0160-3847	9		CAPACITOR-FXD .01UF +100-0% 50VDC CER	28480	0160-3847
A14C224	0160-3847	9		CAPACITOR-FXD .01UF +100-0% 50VDC CER	28480	0160-3847
A14C225	0160-3847	9		CAPACITOR-FXD .01UF +100-0% 50VDC CER	28480	0160-3847
A14C226	0160-2240	4		CAPACITOR-FXD 2PF +-.25PF 500VDC CER	28480	0160-2240
A14C227	0160-3847	9		CAPACITOR-FXD .01UF +100-0% 50VDC CER	28480	0160-3847
A14C228	0160-3847	9		CAPACITOR-FXD .01UF +100-0% 50VDC CER	28480	0160-3847
A14C229	0160-3847	9		CAPACITOR-FXD .01UF +100-0% 50VDC CER	28480	0160-3847
A14C230	0160-3847	9		CAPACITOR-FXD .01UF +100-0% 50VDC CER	28480	0160-3847
A14C231	0180-1746	5		CAPACITOR-FXD 15UF+-10% 20VDC TA	56289	150D156X9020B2
A14C232	0160-4571	8		CAPACITOR-FXD .1UF +80-20% 50VDC CER	28480	0160-4571
A14C233	0180-0210	6		CAPACITOR-FXD 3.3UF+-20% 15VDC TA	56289	150D335X0015A2
A14C234	0160-3847	9		CAPACITOR-FXD .01UF +100-0% 50VDC CER	28480	0160-3847
A14C235	0160-3847	9		CAPACITOR-FXD .01UF +100-0% 50VDC CER	28480	0160-3847
A14C236	0160-3466	8		CAPACITOR-FXD 100PF +-10% 1KVDC CER	28480	0160-3466
A14C238	0160-2055	9		CAPACITOR-FXD .01UF +80-20% 100VDC CER	28480	0160-2055
A14C239	0160-4571	8		CAPACITOR-FXD .1UF +80-20% 50VDC CER	28480	0160-4571
A14C240	0160-3466	8		CAPACITOR-FXD 100PF +-10% 1KVDC CER	28480	0160-3466
A14C241	0160-3847	9		CAPACITOR-FXD .01UF +100-0% 50VDC CER	28480	0160-3847
A14C242	0160-3847	9		CAPACITOR-FXD .01UF +100-0% 50VDC CER	28480	0160-3847
A14C245	0180-1746	5		CAPACITOR-FXD 15UF+-10% 20VDC TA	56289	150D156X9020B2
A14C246	0180-1746	5		CAPACITOR-FXD 15UF+-10% 20VDC TA	56289	150D156X9020B2
A14C260	0160-4571	8		CAPACITOR-FXD .1UF +80-20% 50VDC CER	28480	0160-4571
A14C261	0160-4571	8		CAPACITOR-FXD .1UF +80-20% 50VDC CER	28480	0160-4571
A14C262	0160-4571	8		CAPACITOR-FXD .1UF +80-20% 50VDC CER	28480	0160-4571
A14C263	0180-1746	5		CAPACITOR-FXD 15UF+-10% 20VDC TA	56289	150D156X9020B2
A14C264	0160-4571	8		CAPACITOR-FXD .1UF +80-20% 50VDC CER	28480	0160-4571
A14CR1	1902-0041	4	1	DIODE-ZNR 5.11V 5% DO-35 PD=.4W	28480	1902-0041
A14CR2	1901-0040	1		DIODE-SWITCHING 30V 50MA 2NS DO-35	28480	1901-0040
A14CR3	1901-0040	1		DIODE-SWITCHING 30V 50MA 2NS DO-35	28480	1901-0040
A14CR4	1901-0050	3		DIODE-SWITCHING 80V 200MA 2NS DO-35	28480	1901-0050
A14CR5	1902-3345	7	1	DIODE-ZNR 51.1V 5% DO-35 PD=.4W	28480	1902-3345
A14CR6	1901-0050	3		DIODE-SWITCHING 80V 200MA 2NS DO-35	28480	1901-0050
A14CR7	1901-0050	3		DIODE-SWITCHING 80V 200MA 2NS DO-35	28480	1901-0050
A14CR76	1901-0040	1		DIODE-SWITCHING 30V 50MA 2NS DO-35	28480	1901-0040
A14CR101	1901-0040	1		DIODE-SWITCHING 30V 50MA 2NS DO-35	28480	1901-0040
A14CR102	1901-0040	1		DIODE-SWITCHING 30V 50MA 2NS DO-35	28480	1901-0040

See introduction to this section for ordering information
*Indicates factory selected value

Replaceable Parts

Table 6-3. Replaceable Parts

Reference Designation	HP Part Number	C D	Qty	Description	Mfr Code	Mfr Part Number
A14CR103	1901-0040	1		DIODE-SWITCHING 30V 50MA 2NS DO-35	28480	1901-0040
A14CR104	1901-0040	1		DIODE-SWITCHING 30V 50MA 2NS DO-35	28480	1901-0040
A14CR106	1901-0040	1		DIODE-SWITCHING 30V 50MA 2NS DO-35	28480	1901-0040
A14CR107	1901-0040	1		DIODE-SWITCHING 30V 50MA 2NS DO-35	28480	1901-0040
A14CR108	1901-0535	9		DIODE-SM SIG SCHOTTKY	28480	1901-0535
A14CR109	1901-0535	9		DIODE-SM SIG SCHOTTKY	28480	1901-0535
A14CR110	1901-0040	1		DIODE-SWITCHING 30V 50MA 2NS DO-35	28480	1901-0040
A14CR111	1901-0040	1		DIODE-SWITCHING 30V 50MA 2NS DO-35	28480	1901-0040
A14CR205	1902-0631	8	2	DIODE-ZNR 1N5351B 14V 5% PD=5W TC=+.075%	04713	1N5351B
A14CR208	1901-0040	1		DIODE-SWITCHING 30V 50MA 2NS DO-35	28480	1901-0040
A14CR209	1901-0040	1		DIODE-SWITCHING 30V 50MA 2NS DO-35	28480	1901-0040
A14CR210	1901-0040	1		DIODE-SWITCHING 30V 50MA 2NS DO-35	28480	1901-0040
A14CR211	1901-0050	3		DIODE-SWITCHING 80V 200MA 2NS DO-35	28480	1901-0050
A14CR212	1901-0050	3		DIODE-SWITCHING 80V 200MA 2NS DO-35	28480	1901-0050
A14CR213	1902-3149	9		DIODE-ZNR 9.09V 5% DO-35 PD=.4W	28480	1902-3149
A14CR214	1902-3030	7		DIODE-ZNR 3.01V 5% DO-7 PD=.4W TC=-.067%	28480	1902-3030
A14CR215	1902-0631	8		DIODE-ZNR 1N5351B 14V 5% PD=5W TC=+.075%	04713	1N5351B
A14CR217	1901-0040	1		DIODE-SWITCHING 30V 50MA 2NS DO-35	28480	1901-0040
A14CR219	1901-0040	1		DIODE-SWITCHING 30V 50MA 2NS DO-35	28480	1901-0040
A14CR220	1901-0040	1		DIODE-SWITCHING 30V 50MA 2NS DO-35	28480	1901-0040
A14CR221	1901-0040	1		DIODE-SWITCHING 30V 50MA 2NS DO-35	28480	1901-0040
A14CR222	1901-0535	9		DIODE-SM SIG SCHOTTKY	28480	1901-0535
A14CR223	1901-0535	9		DIODE-SM SIG SCHOTTKY	28480	1901-0535
A14CR224	1901-0535	9		DIODE-SM SIG SCHOTTKY	28480	1901-0535
A14CR225	1901-0535	9		DIODE-SM SIG SCHOTTKY	28480	1901-0535
A14F1	2110-0343	1		FUSE .25A 125V NTD .281X.093	28480	2110-0343
A14F2	2110-0343	1		FUSE .25A 125V NTD .281X.093	28480	2110-0343
A14F3	2110-0343	1		FUSE .25A 125V NTD .281X.093	28480	2110-0343
A14F4	2110-0301	1	1	FUSE .125A 125V .281X.093	28480	2110-0301
A14J1	8159-0005	0	1	RESISTOR-ZERO OHMS 22 AWG LEAD DIA	28480	8159-0005
A14J2	1251-2969	8		CONNECTOR-PHONO SINGLE PHONO JACK; DIP	28480	1251-2969
A14J4	1251-2969	8		CONNECTOR-PHONO SINGLE PHONO JACK; DIP	28480	1251-2969
A14J5	1251-2969	8		CONNECTOR-PHONO SINGLE PHONO JACK; DIP	28480	1251-2969
A14J6	1251-6567	0		CONNECTOR 21-PIN M POST TYPE	28480	1251-6567
A14J9	1251-2969	8		CONNECTOR-PHONO SINGLE PHONO JACK; DIP	28480	1251-2969
A14J12	1251-2969	8		CONNECTOR-PHONO SINGLE PHONO JACK; DIP	28480	1251-2969
A14J13	1251-2969	8		CONNECTOR-PHONO SINGLE PHONO JACK; DIP	28480	1251-2969
A14J14	1251-2969	8		CONNECTOR-PHONO SINGLE PHONO JACK; DIP	28480	1251-2969
A14J23	1251-2969	8		CONNECTOR-PHONO SINGLE PHONO JACK; DIP	28480	1251-2969
A14J24	1251-2969	8		CONNECTOR-PHONO SINGLE PHONO JACK; DIP	28480	1251-2969
A14J25	1251-2969	8		CONNECTOR-PHONO SINGLE PHONO JACK; DIP	28480	1251-2969
A14J30	1251-5064	0	2	CONNECTOR 14-PIN M POST TYPE	28480	1251-5064
A14J31	1258-0141	8		JUMPER-REM	28480	1258-0141
A14L26	9100-1791	1		INDUCTOR 290NH 20% .23DX.375LG	28480	9100-1791
A14L27	9100-1791	1		INDUCTOR 290NH 20% .23DX.375LG	28480	9100-1791
A14L76	9100-1791	1		INDUCTOR 290NH 20% .23DX.375LG	28480	9100-1791
A14L77	9100-1791	1		INDUCTOR 290NH 20% .23DX.375LG	28480	9100-1791
A14L78	9100-1791	1		INDUCTOR 290NH 20% .23DX.375LG	28480	9100-1791
A14L79	9100-1791	1		INDUCTOR 290NH 20% .23DX.375LG	28480	9100-1791
A14L80	9100-0539	3		INDUCTOR (MISC ITEM)	28480	9100-0539
A14L101	9140-0456	7	2	INDUCTOR RF-CH-MLD 470NH 2% .166DX.385LG	28480	9140-0456
A14L102	9140-0456	7		INDUCTOR RF-CH-MLD 470NH 2% .166DX.385LG	28480	9140-0456
A14L103	9100-2486	3	1	INDUCTOR RF-CH-MLD 330NH 5% .166DX.385LG	28480	9100-2486
A14L104	9100-1622	7	3	INDUCTOR RF-CH-MLD 24UH 5% .166DX.385LG	28480	9100-1622
A14L105	9100-1628	3	1	INDUCTOR RF-CH-MLD 43UH 5% .166DX.385LG	28480	9100-1628
A14L201	9100-1791	1		INDUCTOR 290NH 20% .23DX.375LG	28480	9100-1791
A14L203	9170-0894	0		CORE-SHIELDING BEAD	28480	9170-0894
A14L204	9170-0894	0		CORE-SHIELDING BEAD	28480	9170-0894
A14Q1	1853-0092	4	1	TRANSISTOR J-FET N-CHAN D-MODE TO-18 SI	28480	1855-0092
A14Q2	1855-0406	4	2	TRANSISTOR J-FET P-CHAN D-MODE SI	32293	IT110
A14Q3	1854-0692	8		TRANSISTOR NPN SI PD=15W FT=50MHZ	04713	MJE223
A14Q4	1855-0406	4		TRANSISTOR J-FET P-CHAN D-MODE SI	32293	IT110
A14Q25	1855-0410	0	1	TRANSISTOR J-FET N-CHAN D-MODE TO-18 SI	28480	1855-0410
A14Q26	1853-0020	4		TRANSISTOR PNP SI PD=300MW FT=150MHZ	28480	1853-0020
A14Q27	1853-0066	8		TRANSISTOR PNP SI TO-92 PD=625MW	28480	1853-0066
A14Q28	1854-0215	1		TRANSISTOR NPN SI PD=350MW FT=300MHZ	04713	2N3904
A14Q40	1858-0063	5		TRANSISTOR ARRAY 14-PIN PLSTC DIP	3L565	CA3102E
A14Q50	1858-0047	5		TRANSISTOR ARRAY 16-PIN PLSTC DIP	13606	ULN-2003A
A14Q76	1854-0087	5	1	TRANSISTOR NPN SI PD=360MW FT=75MHZ	28480	1854-0087
A14Q101	1854-0795	2	2	TRANSISTOR NPN SI TO-92 PD=625MW	04713	MPSH10
A14Q102	1853-0405	9	1	TRANSISTOR PNP SI PD=300MW FT=850MHZ	04713	2N4209
A14Q103	1853-0089	5		TRANSISTOR PNP 2N4917 SI PD=200MW	07263	2N4917
A14Q104	1854-0404	0	1	TRANSISTOR NPN SI TO-18 PD=360MW	28480	1854-0404
A14Q105	1854-0215	1		TRANSISTOR NPN SI PD=350MW FT=300MHZ	04713	2N3904
A14Q106	1854-0560	9	3	TRANSISTOR NPN SI DARL PD=313MW	04713	MPS A12
A14Q107	1854-0215	1		TRANSISTOR NPN SI PD=350MW FT=300MHZ	04713	2N3904
A14Q108	1853-0083	9	2	TRANSISTOR-DUAL PNP PD=600MW	28480	1853-0083
A14Q109	1853-0083	9		TRANSISTOR-DUAL PNP PD=600MW	28480	1853-0083

See introduction to this section for ordering information
*Indicates factory selected value

Replaceable Parts

Table 6-3. Replaceable Parts

Reference Designation	HP Part Number	C D	Qty	Description	Mfr Code	Mfr Part Number
A14Q112	1854-0314	1	1	TRANSISTOR NPN SI PD=310MW FT=200MHZ	28480	1854-0314
A14Q113	1854-0568	9		TRANSISTOR NPN SI DARL PD=310MW	04713	MPS A12
A14Q114	1854-0215	1		TRANSISTOR NPN SI PD=350MW FT=300MHZ	04713	2N3904
A14Q116	1853-0066	8		TRANSISTOR PNP SI TO-92 PD=625MW	28480	1853-0066
A14Q117	1853-0066	8		TRANSISTOR PNP SI TO-92 PD=625MW	28480	1853-0066
A14Q118	1855-0081	1		TRANSISTOR J-FET N-CHAN D-MODE SI	28480	1855-0081
A14Q119	1854-0568	9		TRANSISTOR NPN SI DARL PD=310MW	04713	MPS A12
A14Q201	1854-0215	1		TRANSISTOR NPN SI PD=350MW FT=300MHZ	04713	2N3904
A14Q203	1854-0233	3	2	TRANSISTOR NPN 2N3866 SI TO-39 PD=1W	3L585	2N3866
A14Q204	1854-0795	2		TRANSISTOR NPN SI TO-92 PD=625MW	04713	MPSH10
A14Q206	1854-0215	1		TRANSISTOR NPN SI PD=350MW FT=300MHZ	04713	2N3904
A14Q207	1854-0233	3		TRANSISTOR NPN 2N3866 SI TO-39 PD=1W	3L585	2N3866
A14Q208	1854-0215	1		TRANSISTOR NPN SI PD=350MW FT=300MHZ	04713	2N3904
A14Q209	1853-0440	2	3	TRANSISTOR PNP SI TO-39 PD=5W FT=500MHZ	04713	MM4418
A14Q210	1854-0357	2	1	TRANSISTOR-DUAL NPN PD=360MW	28480	1854-0357
A14Q211	1853-0448	0		TRANSISTOR PNP SI TO-92 PD=625MW	04713	MPSH81
A14Q212	1853-0036	2		TRANSISTOR PNP SI PD=310MW FT=250MHZ	28480	1853-0036
A14Q213	1853-0440	2		TRANSISTOR PNP SI TO-39 PD=5W FT=500MHZ	04713	MM4418
A14Q214	1853-0020	4		TRANSISTOR PNP SI PD=300MW FT=150MHZ	28480	1853-0020
A14Q215	1854-0215	1		TRANSISTOR NPN SI PD=350MW FT=300MHZ	04713	2N3904
A14Q216	1854-0784	9	1	TRANSISTOR NPN 2N3866A SI TO-39 PD=5W	04713	2N3866A
A14Q219	1853-0440	2		TRANSISTOR PNP SI TO-39 PD=5W FT=500MHZ	04713	MM4418
A14R3	0698-3155	1		RESISTOR 4.64K 1% .125W F TC=0+-100	24546	C4-1/8-T0-4641-F
A14R4	0757-0439	4	5	RESISTOR 6.81K 1% .125W F TC=0+-100	24546	C4-1/8-T0-6811-F
A14R5	0683-2225	3		RESISTOR 2.2K 5% .25W FC TC=-400/+700	01121	CB2225
A14R6	2100-3253	7		RESISTOR-TRMR 50K 10% C TOP-ADJ 1-TRN	28480	2100-3253
A14R7	0698-4817	4	1	RESISTOR 953K 1% .25W F TC=0+-100	28480	0698-4817
A14R8	0698-7850	1	1	RESISTOR 9.455K .1% .125W F TC=0+-25	19701	MF4C1/8-T9-9455R-B
A14R9	0757-0410	1	2	RESISTOR 301 1% .125W F TC=0+-100	24546	C4-1/8-T0-301R-F
A14R11	0757-0410	1		RESISTOR 301 1% .125W F TC=0+-100	24546	C4-1/8-T0-301R-F
A14R26	0683-2225	3		RESISTOR 2.2K 5% .25W FC TC=-400/+700	01121	CB2225
A14R27	0683-2225	3		RESISTOR 2.2K 5% .25W FC TC=-400/+700	01121	CB2225
A14R28	0683-2225	3		RESISTOR 2.2K 5% .25W FC TC=-400/+700	01121	CB2225
A14R29	0683-2225	3		RESISTOR 2.2K 5% .25W FC TC=-400/+700	01121	CB2225
A14R31	0683-1035	1		RESISTOR 10K 5% .25W FC TC=-400/+700	01121	CB1035
A14R32	0683-1035	1		RESISTOR 10K 5% .25W FC TC=-400/+700	01121	CB1035
A14R33	0683-1025	9		RESISTOR 1K 5% .25W FC TC=-400/+600	01121	CB1025
A14R34	0683-5635	5	1	RESISTOR 56K 5% .25W FC TC=-400/+800	01121	CB5635
A14R36	0683-2235	5	4	RESISTOR 22K 5% .25W FC TC=-400/+800	01121	CB2235
A14R37	0683-2225	3		RESISTOR 2.2K 5% .25W FC TC=-400/+700	01121	CB2225
A14R38	0757-0289	2	3	RESISTOR 13.3K 1% .125W F TC=0+-100	19701	MF4C1/8-T0-1332-F
A14R39	0757-0442	9		RESISTOR 10K 1% .125W F TC=0+-100	24546	C4-1/8-T0-1002-F
A14R40	2100-3214	0	1	RESISTOR-TRMR 100K 10% C TOP-ADJ 1-TRN	28480	2100-3214
A14R41	0757-0289	2		RESISTOR 13.3K 1% .125W F TC=0+-100	19701	MF4C1/8-T0-1332-F
A14R42	0699-0124	0	1	RESISTOR 10.2K .1% .125W F TC=0+-25	28480	0699-0124
A14R43	0757-0442	9		RESISTOR 10K 1% .125W F TC=0+-100	24546	C4-1/8-T0-1002-F
A14R44	0757-0441	8		RESISTOR 8.25K 1% .125W F TC=0+-100	24546	C4-1/8-T0-8251-F
A14R45	0683-4705	8		RESISTOR 47 5% .25W FC TC=-400/+500	01121	CB4705
A14R46	0683-1025	9		RESISTOR 1K 5% .25W FC TC=-400/+600	01121	CB1025
A14R47	0683-2265	1	1	RESISTOR 22M 5% .25W FC TC=-900/+1200	01121	CB2265
A14R48	0683-4725	2		RESISTOR 4.7K 5% .25W FC TC=-400/+700	01121	CB4725
A14R49	0757-0438	3		RESISTOR 5.11K 1% .125W F TC=0+-100	24546	C4-1/8-T0-5111-F
A14R50	0683-2225	3		RESISTOR 2.2K 5% .25W FC TC=-400/+700	01121	CB2225
A14R51	0757-0279	0		RESISTOR 3.16K 1% .125W F TC=0+-100	24546	C4-1/8-T0-3161-F
A14R52	0757-0430	3		RESISTOR 5.11K 1% .125W F TC=0+-100	24546	C4-1/8-T0-5111-F
A14R53	0698-6347	9	1	RESISTOR 1.5K .1% .125W F TC=0+-25	28480	0698-6347
A14R54	0698-6936	2	1	RESISTOR 156K .5% .125W F TC=0+-50	28480	0698-6936
A14R55	0757-0280	3		RESISTOR 1K 1% .125W F TC=0+-100	24546	C4-1/8-T0-1001-F
A14R56	0757-0449	6	3	RESISTOR 20K 1% .125W F TC=0+-100	24546	C4-1/8-T0-2002-F
A14R57	0699-0121	7	1	RESISTOR 2.05M 1% .125W F TC=0+-100	28480	0699-0121
A14R58	0699-0122	8	1	RESISTOR 4.8K .1% .125W F TC=0+-25	28480	0699-0122
A14R60	0683-1015	7		RESISTOR 100 5% .25W FC TC=-400/+500	01121	CB1015
A14R61	0683-1025	9		RESISTOR 1K 5% .25W FC TC=-400/+600	01121	CB1025
A14R62	0683-1015	7		RESISTOR 100 5% .25W FC TC=-400/+500	01121	CB1015
A14R63	0683-1025	9		RESISTOR 1K 5% .25W FC TC=-400/+600	01121	CB1025
A14R64	0683-1025	9		RESISTOR 1K 5% .25W FC TC=-400/+600	01121	CB1025
A14R65	0683-1015	7		RESISTOR 100 5% .25W FC TC=-400/+500	01121	CB1015
A14R67	0683-1025	9		RESISTOR 1K 5% .25W FC TC=-400/+600	01121	CB1025
A14R68	0683-1025	9		RESISTOR 1K 5% .25W FC TC=-400/+600	01121	CB1025
A14R69	0683-1015	7		RESISTOR 100 5% .25W FC TC=-400/+500	01121	CB1015
A14R76	0683-1035	1		RESISTOR 10K 5% .25W FC TC=-400/+700	01121	CB1035
A14R77	0683-2225	3		RESISTOR 2.2K 5% .25W FC TC=-400/+700	01121	CB2225
A14R78	0683-1025	9		RESISTOR 1K 5% .25W FC TC=-400/+600	01121	CB1025
A14R001	0683-2215	1	1	RESISTOR 220 5% .25W FC TC=-400/+600	01121	CB2215
A14R100	0683-2225	3		RESISTOR 2.2K 5% .25W FC TC=-400/+700	01121	CB2225
A14R101	0683-2225	3		RESISTOR 2.2K 5% .25W FC TC=-400/+700	01121	CB2225
A14R102	0683-4705	8		RESISTOR 47 5% .25W FC TC=-400/+500	01121	CB4705

See introduction to this section for ordering information
*Indicates factory selected value

Replaceable Parts

Table 6-3. Replaceable Parts

Reference Designation	HP Part Number	C D	Qty	Description	Mfr Code	Mfr Part Number
A14R103	0757-0273	4		RESISTOR 3.01K 1% .125W F TC=0+-100	24546	C4-1/8-T0-3011-F
A14R104	0757-0283	6		RESISTOR 2K 1% .125W F TC=0+-100	24546	C4-1/8-T0-2001-F
A14R105	0757-0398	4		RESISTOR 75 1% .125W F TC=0+-100	24546	C4-1/8-T0-75R0-F
A14R106	0683-1515	2		RESISTOR 150 5% .25W FC TC=-400/+600	01121	CB1515
A14R107	0757-0400	9	1	RESISTOR 90.9 1% .125W F TC=0+-100	24546	C4-1/8-T0-90R9-F
A14R108	0698-4427	2	1	RESISTOR 1.65K 1% .125W F TC=0+-100	24546	C4-1/8-T0-1651-F
A14R109	0757-0420	3	1	RESISTOR 750 1% .125W F TC=0+-100	24546	C4-1/8-T0-751-F
A14R110	0683-2225	3		RESISTOR 2.2K 5% .25W FC TC=-400/+700	01121	CB2225
A14R111	0683-2225	3		RESISTOR 2.2K 5% .25W FC TC=-400/+700	01121	CB2225
A14R112	0683-7505	2	1	RESISTOR 75 5% .25W FC TC=-400/+500	01121	CB7505
A14R113	0757-0280	3		RESISTOR 1K 1% .125W F TC=0+-100	24546	C4-1/8-T0-1001-F
A14R114	0698-6317	3	2	RESISTOR 500 .1% .125W F TC=0+-25	03888	PME55-1/8-T9-500R-B
A14R116	0698-6317	3		RESISTOR 500 .1% .125W F TC=0+-25	03888	PME55-1/8-T9-500R-B
A14R117	0698-4123	5	3	RESISTOR 499 1% .125W F TC=0+-100	24546	C4-1/8-T0-499R-F
A14R118	0698-4123	5		RESISTOR 499 1% .125W F TC=0+-100	24546	C4-1/8-T0-499R-F
A14R119	0698-4435	2		RESISTOR 2.49K 1% .125W F TC=0+-100	24546	C4-1/8-T0-2491-F
A14R121	0683-2225	3		RESISTOR 2.2K 5% .25W FC TC=-400/+700	01121	CB2225
A14R122	0698-6360	6		RESISTOR 10K .1% .125W F TC=0+-25	28480	0698-6360
A14R123	0698-6320	8		RESISTOR 5K .1% .125W F TC=0+-25	03888	PME55-1/8-T9-5001-B
A14R124	0698-6320	8		RESISTOR 5K .1% .125W F TC=0+-25	03888	PME55-1/8-T9-5001-B
A14R126	0698-6320	8		RESISTOR 5K .1% .125W F TC=0+-25	03888	PME55-1/8-T9-5001-B
A14R127	0698-6360	6		RESISTOR 10K .1% .125W F TC=0+-25	28480	0698-6360
A14R128	0698-6321	9	1	RESISTOR 9.9K .1% .125W F TC=0+-25	03888	PME55-1/8-T9-9901-B
A14R129	0698-3279	0		RESISTOR 4.99K 1% .125W F TC=0+-100	24546	C4-1/8-T0-4991-F
A14R130	2100-3212	8	1	RESISTOR-TRMR 200 10% C TOP-ADJ 1-TRN	28480	2100-3212
A14R131	0757-0279	0		RESISTOR 3.16K 1% .125W F TC=0+-100	24546	C4-1/8-T0-3161-F
A14R132	0698-3177	9	1	RESISTOR 2.55K 1% .125W F TC=0+-100	24546	C4-1/8-T0-2551
A14R133	0683-4705	8		RESISTOR 47 5% .25W FC TC=-400/+500	01121	CB4705
A14R134	0757-0438	3		RESISTOR 5.11K 1% .125W F TC=0+-100	24546	C4-1/8-T0-5111-F
A14R136	0698-3557	7	1	RESISTOR 806 1% .125W F TC=0+-100	24546	C4-1/8-T0-806R-F
A14R137	0757-0416	7	4	RESISTOR 511 1% .125W F TC=0+-100	24546	C4-1/8-T0-511R-F
A14R138	0757-0280	3		RESISTOR 1K 1% .125W F TC=0+-100	24546	C4-1/8-T0-1001-F
A14R139	0757-0280	3		RESISTOR 1K 1% .125W F TC=0+-100	24546	C4-1/8-T0-1001-F
A14R141	0698-4453	4		RESISTOR 402 1% .125W F TC=0+-100	24546	C4-1/8-T0-402R-F
A14R142	2100-3409	5	2	RESISTOR-TRMR 20 10% C TOP-ADJ 1-TRN	28480	2100-3409
A14R143	0698-4037	0		RESISTOR 46.4 1% .125W F TC=0+-100	24546	C4-1/8-T0-46R4-F
A14R144	0698-3279	0		RESISTOR 4.99K 1% .125W F TC=0+-100	24546	C4-1/8-T0-4991-F
A14R145	0683-4705	8		RESISTOR 47 5% .25W FC TC=-400/+500	01121	CB4705
A14R146	0698-3279	0		RESISTOR 4.99K 1% .125W F TC=0+-100	24546	C4-1/8-T0-4991-F
A14R147	0757-0442	9		RESISTOR 10K 1% .125W F TC=0+-100	24546	C4-1/8-T0-1002-F
A14R148	0698-6619	8		RESISTOR 15K .1% .125W F TC=0+-25	28480	0698-6619
A14R149	0698-6360	6		RESISTOR 10K .1% .125W F TC=0+-25	28480	0698-6360
A14R151	0698-8607	8	1	RESISTOR 4.5K .1% .125W F TC=0+-25	28480	0698-8607
A14R152	0699-0123	9	1	RESISTOR 6.75K .1% .125W F TC=0+-25	28480	0699-0123
A14R153	0683-1035	1		RESISTOR 10K 5% .25W FC TC=-400/+700	01121	CB1035
A14R154	0683-4705	8		RESISTOR 47 5% .25W FC TC=-400/+500	01121	CB4705
A14R156	0683-1035	1		RESISTOR 10K 5% .25W FC TC=-400/+700	01121	CB1035
A14R157	0683-4705	8		RESISTOR 47 5% .25W FC TC=-400/+500	01121	CB4705
A14R158	0757-0449	6		RESISTOR 20K 1% .125W F TC=0+-100	24546	C4-1/8-T0-2002-F
A14R159	0757-0449	6		RESISTOR 20K 1% .125W F TC=0+-100	24546	C4-1/8-T0-2002-F
A14R160	0683-1055	5	1	RESISTOR 1M 5% .25W FC TC=-800/+900	01121	CB1055
A14R161	0757-0273	4		RESISTOR 3.01K 1% .125W F TC=0+-100	24546	C4-1/8-T0-3011-F
A14R162	0698-4473	0	1	RESISTOR 9.76K 1% .125W F TC=0+-100	03888	PME55-1/8-T0-9761-F
A14R163	0683-3935	4	1	RESISTOR 39K 5% .25W FC TC=-400/+800	01121	CB3935
A14R164	0698-4382	8	1	RESISTOR 52.3 1% .125W F TC=0+-100	24546	C4-1/8-T0-52R3-F
A14R166	0757-0401	0		RESISTOR 100 1% .125W F TC=0+-100	24546	C4-1/8-T0-101-F
A14R168	0683-6815	5		RESISTOR 680 5% .25W FC TC=-400/+600	01121	CB6815
A14R169	0683-1015	7		RESISTOR 100 5% .25W FC TC=-400/+500	01121	CB1015
A14R208	0757-0438	3		RESISTOR 5.11K 1% .125W F TC=0+-100	24546	C4-1/8-T0-5111-F
A14R209	0757-0438	3		RESISTOR 5.11K 1% .125W F TC=0+-100	24546	C4-1/8-T0-5111-F
A14R211	0683-4735	4	3	RESISTOR 47K 5% .25W FC TC=-400/+800	01121	CB4735
A14R212	0683-1025	9		RESISTOR 1K 5% .25W FC TC=-400/+600	01121	CB1025
A14R214	0683-1025	9		RESISTOR 1K 5% .25W FC TC=-400/+600	01121	CB1025
A14R215	0683-1035	1		RESISTOR 10K 5% .25W FC TC=-400/+700	01121	CB1035
A14R216	0683-2235	5		RESISTOR 22K 5% .25W FC TC=-400/+800	01121	CB2235
A14R217	0683-2235	5		RESISTOR 22K 5% .25W FC TC=-400/+800	01121	CB2235
A14R218	0683-2205	9		RESISTOR 22 5% .25W FC TC=-400/+500	01121	CB2205
A14R220	0757-0401	0		RESISTOR 100 1% .125W F TC=0+-100	24546	C4-1/8-T0-101-F
A14R221	0698-6320	8		RESISTOR 5K .1% .125W F TC=0+-25	03888	PME55-1/8-T9-5001-B
A14R222	0683-4705	8		RESISTOR 47 5% .25W FC TC=-400/+500	01121	CB4705
A14R223	0683-4705	8		RESISTOR 47 5% .25W FC TC=-400/+500	01121	CB4705
A14R224	0757-0276	7		RESISTOR 61.9 1% .125W F TC=0+-100	24546	C4-1/8-T0-6192-F
A14R226	0757-0437	2	1	RESISTOR 4.75K 1% .125W F TC=0+-100	24546	C4-1/8-T0-4751-F
A14R228	0757-0405	4	2	RESISTOR 162 1% .125W F TC=0+-100	24546	C4-1/8-T0-162R-F
A14R229	0683-2205	9		RESISTOR 22 5% .25W FC TC=-400/+500	01121	CB2205

See introduction to this section for ordering information
*Indicates factory selected value

Replaceable Parts

Table 6-3. Replaceable Parts

Reference Designation	HP Part Number	C D	Qty	Description	Mfr Code	Mfr Part Number
A14R231	0757-0277	8	2	RESISTOR 49.9 1% .125W F TC=0+-100	24546	C4-1/8-T0-4992-F
A14R232	0757-0317	7	4	RESISTOR 1.33K 1% .125W F TC=0+-100	24546	C4-1/8-T0 1331-F
A14R233	0683-1235	7	2	RESISTOR 12 5% .25W FC TC=-400/+500	01121	CB1205
A14R234	0683-0395	4	2	RESISTOR 3.9 5% .25W FC TC=-400/+500	01121	CB39G5
A14R236	0757-0438	3		RESISTOR 5.11K 1% .125W F TC=0+-100	24546	C4-1/8-T0-5111-F
A14R237	0757-0438	3		RESISTOR 5.11K 1% .125W F TC=0+-100	24546	C4-1/8-T0-5111-F
A14R238	0683-1045	3		RESISTOR 100K 5% .25W FC TC=-400/+800	01121	CB1045
A14R239	0683-4705	8		RESISTOR 47 5% .25W FC TC=-400/+500	01121	CB4705
A14R241	0683-4705	8		RESISTOR 47 5% .25W FC TC=-400/+500	01121	CB4705
A14R242	0687-4701	2	4	RESISTOR 47 10% .5W CC TC=0+412	01121	EB4701
A14R243	0687-4701	2		RESISTOR 47 10% .5W CC TC=0+412	01121	EB4701
A14R244	0757-0465	6	3	RESISTOR 100K 1% .125W F TC=0+-100	24546	C4-1/8-T0-1003-F
A14R245	0683-2205	9		RESISTOR 22 5% .25W FC TC=-400/+500	01121	CB2205
A14R245	0757-0280	3		RESISTOR 1K 1% .125W F TC=0+-100	24546	C4-1/8-T0-1001-F
A14R247	0757-0465	6		RESISTOR 100K 1% .125W F TC=0+-100	24546	C4-1/8-T0-1003-F
A14R248	0683-2205	9		RESISTOR 22 5% .25W FC TC=-400/+500	01121	CB2205
A14R249	0683-2705	9	2	RESISTOR 2.7 5% .25W FC TC=-400/+500	01121	CB27G5
A14R250	0757-0442	9		RESISTOR 10K 1% .125W F TC=0+-100	24546	C4-1/8-T0-1002-F
A14R251	0683-2705	9		RESISTOR 2.7 5% .25W FC TC=-400/+500	01121	CB27G5
A14R252	0699-0064	7	1	RESISTOR 50 .1% .5W F TC=0+-25	28480	0699-0064
A14R253	0687-4701	2		RESISTOR 47 10% .5W CC TC=0+412	01121	EB4701
A14R254	0757-0402	1	1	RESISTOR 110 1% .125W F TC=0+-100	24546	C4-1/8-T0-111-F
A14R255	0757-0280	3		RESISTOR 1K 1% .125W F TC=0+-100	24546	C4-1/8-T0-1001-F
A14R256	0757-0280	3		RESISTOR 1K 1% .125W F TC=0+-100	24546	C4-1/8-T0-1001-F
A14R257	0757-0283	6		RESISTOR 2K 1% .125W F TC=0+-100	24546	C4-1/8-T0-2001-F
A14R258	0683-2205	9		RESISTOR 22 5% .25W FC TC=-400/+500	01121	CB2205
A14R259	0757-0442	9		RESISTOR 10K 1% .125W F TC=0+-100	24546	C4-1/8-T0-1002-F
A14R260	0687-4701	2		RESISTOR 47 10% .5W CC TC=0+412	01121	EB4701
A14R261	0757-0442	9		RESISTOR 10K 1% .125W F TC=0+-100	24546	C4-1/8-T0-1002-F
A14R262	0683-4705	8		RESISTOR 47 5% .25W FC TC=-400/+500	01121	CB4705
A14R263	0683-0685	5	2	RESISTOR 6.8 5% .25W FC TC=-400/+500	01121	CB68G5
A14R264	0683-0685	5		RESISTOR 6.8 5% .25W FC TC=-400/+500	01121	CB68G5
A14R265	0698-4388	4	1	RESISTOR 63.4 1% .125W F TC=0+-100	24546	C4-1/8-T0-63R4-F
A14R266	0698-4458	1	1	RESISTOR 324 1% .125W F TC=0+-100	24546	C4-1/8-T0-324R-F
A14R268	0683-4705	8		RESISTOR 47 5% .25W FC TC=-400/+500	01121	CB4705
A14R269	0757-0346	2	1	RESISTOR 10 1% .125W F TC=0+-100	24546	C4-1/8-T0-10R0-F
A14R270	0698-3492	9	1	RESISTOR 2.67K 1% .125W F TC=0+-100	24546	C4-1/8-T0-2671-F
A14R271	0757-0405	4		RESISTOR 162 1% .125W F TC=0+-100	24546	C4-1/8-T0-162R-F
A14R272	0683-2205	9		RESISTOR 22 5% .25W FC TC=-400/+500	01121	CB2205
A14R273	0757-0277	8		RESISTOR 49.9 1% .125W F TC=0+-100	24546	C4-1/8-T0-4992-F
A14R274	0757-0317	7		RESISTOR 1.33K 1% .125W F TC=0+-100	24546	C4-1/8-T0-1331-F
A14R275	2100-3409	5		RESISTOR-TRMR 20 10% C TOP-ADJ 1-TRN	28480	2100-3409
A14R276	0683-0395	4		RESISTOR 3.9 5% .25W FC TC=-400/+500	01121	CB39G5
A14R277	0683-1205	7		RESISTOR 12 5% .25W FC TC=-400/+500	01121	CB1205
A14R278	0757-0280	7	1	RESISTOR 5.62K 1% .125W F TC=0+-100	24546	C4-1/8-T0-5621-F
A14TP18	1251-4822	6		CONNECTOR 3-PIN M POST TYPE	28480	1251-4822
A14U1	1820-1196	8		IC FF TTL LS D-TYPE POS-EDGE-TRIG COM	01295	SN74LS174N
A14U2	1820-1197	9		IC GATE TTL LS NAND QUAD 2-INP	01295	SN74LS00N
A14U3	1826-0476	7		IC SWITCH ANLG 8-DIP-P PKG	01295	TL601CP
A14U4	1826-0476	7		IC SWITCH ANLG 8-DIP-P PKG	01295	TL601CP
A14U5	1826-0304	0	3	IC OP AMP LOW-BIAS-H-IMPD TO-99 PKG	27014	LF355H
A14U6	1820-1278	7	1	IC CNTR TTL LS BIN UP/DOWN SYNCHRO	01295	SN74LS191N
A14U7	1820-1279	8	5	IC CNTR TTL LS DECD UP/DOWN SYNCHRO	01295	SN74LS190N
A14U8	1820-1279	8		IC CNTR TTL LS DECD UP/DOWN SYNCHRO	01295	SN74LS190N
A14U9	1820-1279	8		IC CNTR TTL LS DECD UP/DOWN SYNCHRO	01295	SN74LS190N
A14U10	1820-1282	3	1	IC FF TTL LS J-K BAR POS-EDGE-TRIG	01295	SN74LS109AN
A14U11	1820-1112	8		IC FF TTL LS D-TYPE POS-EDGE-TRIG	01295	SN74LS74AN
A14U12	1820-1112	8		IC FF TTL LS D-TYPE POS-EDGE-TRIG	01295	SN74LS74AN
A14U13	1820-1423	4	2	IC MV TTL LS MONOSTBL RETRIG DUAL	01295	SN74LS123N
A14U14	1820-0693	8		IC FF TTL S D-TYPE POS-EDGE-TRIG	01295	SN74S74N
A14U15	1821-0001	4	2	TRANSISTOR ARRAY 14-PIN PLSTC DIP	3L585	CA3046
A14U16	1826-0304	0		IC OP AMP LOW-BIAS-H-IMPD TO-99 PKG	27014	LF355H
A14U17	1826-0304	0		IC OP AMP LOW-BIAS-H-IMPD TO-99 PKG	27014	LF355H
A14U18	1826-0208	3	5	IC OP AMP GP 8-DIP-P PKG	27014	LM310N
A14U19	1826-0208	3		IC OP AMP GP 8-DIP-P PKG	27014	LM310N
A14U20	1826-0416	5	2	IC SWITCH ANLG QUAD 16-DIP-C PKG	27014	LF13331D
A14U21	1826-0208	3		IC OP AMP GP 8-DIP-P PKG	27014	LM310N
A14U23	1826-0208	3		IC OP AMP GP 8-DIP-P PKG	27014	LM310N
A14U24	1826-0416	5		IC SWITCH ANLG QUAD 16-DIP-C PKG	27014	LF13331D
A14U25	1826-0208	3		IC OP AMP GP 8-DIP-P PKG	27014	LM310N
A14U26	1820-1730	6		IC FF TTL LS D-TYPE POS-EDGE-TRIG COM	01295	SN74LS273N
A14U27	1820-1216	3		IC DCDR TTL LS 3-TO-8-LINE 3-INP	01295	SN74LS139N
A14U28	1820-1196	8		IC FF TTL LS D-TYPE POS-EDGE-TRIG COM	01295	SN74LS174N
A14U29	1820-1730	6		IC FF TTL LS D-TYPE POS-EDGE-TRIG COM	01295	SN74LS273N
A14U30	1820-1641	8	2	IC DRVR TTL LS BUS DRVR HEX 1-INP	01295	SN74LS365AN
A14U31	1820-1199	1		IC INV TTL LS HEX 1-INP	01295	SN74LS04N

See introduction to this section for ordering information
*Indicates factory selected value

Replaceable Parts

Table 6-3. Replaceable Parts

Reference Designation	HP Part Number	C D	Qty	Description	Mfr Code	Mfr Part Number
A14U32	1820-1442	7	1	IC CNTR TTL LS DECD ASYNCHRO	01295	SN74LS290N
A14U33	1820-0693	8		IC FF TTL S D-TYPE POS-EDGE-TRIG	01295	SN74S74N
A14U34	1820-1112	8		IC FF TTL LS D-TYPE POS-EDGE-TRIG	01295	SN74LS74AN
A14U35	1820-0693	8		IC FF TTL S D-TYPE POS-EDGE-TRIG	01295	SN74S74N
A14U36	1820-0694	9	1	IC GATE TTL S EXCL-OR QUAD 2-INP	01295	SN74S86N
A14U37	1820-1202	7	1	IC GATE TTL LS NAND TPL 3-INP	01295	SN74LS10N
A14U38	1826-0111	7	3	IC OP AMP GP DUAL TO-99 PKG	3L585	CA1458T
A14U39	1826-0879	4	1	IC-LINEAR	28480	1826-0879
A14U40	1858-0063	5	1	XSTR-ARRAY 14-PIN PLSTC DIP	0192B	CA3102E
A14U41	1826-0111	7		IC OP AMP GP DUAL TO-99 PKG	3L585	CA1458T
A14U42	1826-0026	3	1	IC COMPARATOR PRCN TO-99 PKG	01295	LM311L
A14U44	1820-1112	8		IC FF TTL LS D-TYPE POS-EDGE-TRIG	01295	SN74LS74AN
A14U45	1820-1423	4		IC MV TTL LS MONOSTBL RETRIG DUAL	01295	SN74LS123N
A14U47	1820-0321	9		IC COMPARATOR GP TO-99 PKG	01295	SN72710L
A14U48	1820-1199	1		IC INV TTL LS HEX 1-INP	01295	SN74LS04N
A14U49	1820-1730	6		IC FF TTL LS D-TYPE POS-EDGE-TRIG COM	01295	SN74LS273N
A14U50	1858-0047	5	1	XSTR-ARRAY 16-PIN PLSTC DIP	13606	ULN-2003A
	0360-1716	1		TERMINAL-STUD SGL-PIN PRESS-MTG	28480	0360-1716
	1200-0796	8	1	SOCKET-IC 8-CONT DIP DIP-SLDR	28480	1200-0796
	1205-0011	0	2	HEAT SINK TO-5/TO-39-CS	28480	1205-0011
	1205-0018	7	2	HEAT SINK TO-18-CS	28480	1205-0018
	1205-0033	6	6	HEAT SINK TO-5/TO-39-CS	28480	1205-0033
	1251-0600	0		CONNECTOR-SGL CONT PIN 1.14-MM-BSC-SZ SQ	28480	1251-0600
	1460-1336	4		WIREFORM CU BRT-TIN	28480	1460-1336
	7121-1234	9		LABEL CAUTION 1.925-IN-WD 2.24-IN-LG	28480	7121-1234
A21	03325-66521	2	2	PC ASSY-FFS D/A	28480	03325-66521
A21C1	0140-0191	8		CAPACITOR-FXD 56PF +-5% 300VDC MICA	72136	DM15E560J0300WV1CR
A21C2	0160-3847	9		CAPACITOR-FXD .01UF +100-0% 50VDC CER	28480	0160-3847
A21C3	0180-1861	5	3	CAPACITOR-FXD 27UF+-10% 10VDC TA	56289	150D276X9010B2
A21C4	0180-1746	5		CAPACITOR-FXD 15UF+-10% 20VDC TA	56289	150D156X9020B2
A21C6	0140-0191	8		CAPACITOR-FXD 56PF +-5% 300VDC MICA	72136	DM15E560J0300WV1CR
A21C7	0160-4571	8		CAPACITOR-FXD .1UF +80-20% 50VDC CER	28480	0160-4571
A21C8	0160-3847	9		CAPACITOR-FXD .01UF +100-0% 50VDC CER	28480	0160-3847
A21C9	0160-3847	9		CAPACITOR-FXD .01UF +100-0% 50VDC CER	28480	0160-3847
A21C10	0160-4571	8		CAPACITOR-FXD .1UF +80-20% 50VDC CER	28480	0160-4571
A21C11	0180-1861	5		CAPACITOR-FXD 27UF+-10% 10VDC TA	56289	150D276X9010B2
A21C12	0160-3847	9		CAPACITOR-FXD .01UF +100-0% 50VDC CER	28480	0160-3847
A21C13	0160-2250	6		CAPACITOR-FXD 5.1PF +-.25PF 500VDC CER	28480	0160-2250
A21C14	0160-3847	9		CAPACITOR-FXD .01UF +100-0% 50VDC CER	28480	0160-3847
A21C15	0160-2222	2	1	CAPACITOR-FXD 1500PF +-5% 300VDC MICA	28480	0160-2222
A21C16	0160-3847	9		CAPACITOR-FXD .01UF +100-0% 50VDC CER	28480	0160-3847
A21C17	0160-4461	5	1	CAPACITOR-FXD 150PF +-2.5% 160VDC POLYP	28480	0160-4461
A21C18	0160-2257	3		CAPACITOR-FXD 18PF +-5% 500VDC CER 0+-60	28480	0160-2257
A21C19	0180-1746	5		CAPACITOR-FXD 15UF+-10% 20VDC TA	56289	150D156X9020B2
A21C21	0180-1746	5		CAPACITOR-FXD 15UF+-10% 20VDC TA	56289	150D156X9020B2
A21C22	0160-5306	9		CAPACITOR-FXD .1UF +-10% 100VDC	28480	0160-5306
A21C23	0160-3847	9		CAPACITOR-FXD .01UF +100-0% 50VDC CER	28480	0160-3847
A21C24	0140-0149	6	1	CAPACITOR-FXD 470PF +-5% 300VDC MICA	72136	DM15F471J0300WV1CR
A21C26	0160-3847	9		CAPACITOR-FXD .01UF +100-0% 50VDC CER	28480	0160-3847
A21C27	0160-2243	7	1	CAPACITOR-FXD 2.7PF +-.25PF 500VDC CER	28480	0160-2243
A21C28	0160-2208	4	1	CAPACITOR-FXD 330PF +-5% 300VDC MICA	28480	0160-2208
A21C29	0160-3847	9		CAPACITOR-FXD .01UF +100-0% 50VDC CER	28480	0160-3847
A21C31	0160-3847	9		CAPACITOR-FXD .01UF +100-0% 50VDC CER	28480	0160-3847
A21C32	0160-4571	8		CAPACITOR-FXD .1UF +80-20% 50VDC CER	28480	0160-4571
A21C33	0160-3847	9		CAPACITOR-FXD .01UF +100-0% 50VDC CER	28480	0160-3847
A21C131	0140-0191	8		CAPACITOR-FXD 56PF +-5% 300VDC MICA	72136	DM15E560J0300WV1CR
A21C132	0160-3847	9		CAPACITOR-FXD .01UF +100-0% 50VDC CER	28480	0160-3847
A21C133	0160-3847	9		CAPACITOR-FXD .01UF +100-0% 50VDC CER	28480	0160-3847
A21C134	0160-4571	8		CAPACITOR-FXD .1UF +80-20% 50VDC CER	28480	0160-4571
A21C135	0160-3847	9		CAPACITOR-FXD .01UF +100-0% 50VDC CER	28480	0160-3847
A21C136	0160-3847	9		CAPACITOR-FXD .01UF +100-0% 50VDC CER	28480	0160-3847
A21C137	0160-3847	9		CAPACITOR-FXD .01UF +100-0% 50VDC CER	28480	0160-3847
A21C138	0140-0206	6	1	CAPACITOR-FXD 270PF +-5% 500VDC MICA	72136	DM15F271J0500WV1CR
A21C139	0160-3847	9		CAPACITOR-FXD .01UF +100-0% 50VDC CER	28480	0160-3847
A21C140	0160-3847	9		CAPACITOR-FXD .01UF +100-0% 50VDC CER	28480	0160-3847
A21C141	0180-1746	5		CAPACITOR-FXD 15UF+-10% 20VDC TA	56289	150D156X9020B2
A21C142	0160-3847	9		CAPACITOR-FXD .01UF +100-0% 50VDC CER	28480	0160-3847
A21C143	0160-3847	9		CAPACITOR-FXD .01UF +100-0% 50VDC CER	28480	0160-3847
A21C144	0180-1861	5		CAPACITOR-FXD 27UF+-10% 10VDC TA	56289	150D276X9010B2
A21C145	0180-1746	5		CAPACITOR-FXD 15UF+-10% 20VDC TA	56289	150D156X9020B2
A21C162	0160-3879	7	2	CAPACITOR-FXD .01UF +-20% 100VDC CER	28480	0160-3879
A21C163	0160-3847	9		CAPACITOR-FXD .01UF +100-0% 50VDC CER	28480	0160-3847
A21C164	0160-3847	9		CAPACITOR-FXD .01UF +100-0% 50VDC CER	28480	0160-3847
A21C167	0160-3847	9		CAPACITOR-FXD .01UF +100-0% 50VDC CER	28480	0160-3847
A21C168	0160-2204	0		CAPACITOR-FXD 100PF +-5% 300VDC MICA	28480	0160-2204
A21C169	0160-3847	9		CAPACITOR-FXD .01UF +100-0% 50VDC CER	28480	0160-3847

See introduction to this section for ordering information
*Indicates factory selected value

Replaceable Parts

Table 6-3. Replaceable Parts

Reference Designation	HP Part Number	C D	Qty	Description	Mfr Code	Mfr Part Number
A21C171	0180-1746	5		CAPACITOR-FXD 15UF+-10% 20VDC TA	56289	150D156X9020B2
A21C173	0180-0228	6		CAPACITOR-FXD 22UF+-10% 15VDC TA	56289	150D226X9015B2
A21C174	0160-2204	0		CAPACITOR-FXD 100PF +-5% 300VDC MICA	28480	0160-2204
A21C176	0160-0571	0	1	CAPACITOR-FXD 470PF +-20% 100VDC CER	28480	0160-0571
A21C177	0160-3879	7		CAPACITOR-FXD .01UF +-20% 100VDC CER	28480	0160-3879
A21C178	0160-3847	9		CAPACITOR-FXD .01UF +100-0% 50VDC CER	28480	0160-3847
A21C179	0160-4040	6	1	CAPACITOR-FXD 1000PF +-5% 100VDC CER	28480	0160-4040
A21C181	0160-2204	0		CAPACITOR-FXD 100PF +-5% 300VDC MICA	28480	0160-2204
A21C182	0160-4441	1	1	CAPACITOR-FXD .47UF +-10% 50VDC CER	28480	0160-4441
A21C183	0160-0127	2	2	CAPACITOR-FXD 1UF +-20% 25VDC CER	28480	0160-0127
A21C184	0160-3847	9		CAPACITOR-FXD .01UF +100-0% 50VDC CER	28480	0160-3847
A21C185	0160-3847	9		CAPACITOR-FXD .01UF +100-0% 50VDC CER	28480	0160-3847
A21C186	0160-3847	9		CAPACITOR-FXD .01UF +100-0% 50VDC CER	28480	0160-3847
A21C187	0160-3847	9		CAPACITOR-FXD .01UF +100-0% 50VDC CER	28480	0160-3847
A21C188	0160-0127	2		CAPACITOR-FXD 1UF +-20% 25VDC CER	28480	0160-0127
A21C190	0160-4571	8		CAPACITOR-FXD .1UF +80-20% 50VDC CER	28480	0160-4571
A21C195	0160-3876	4	1	CAPACITOR-FXD 47PF +-20% 200VDC CER	28480	0160-3876
A21C196	0160-4283	9	2	CAPACITOR-FXD 100PF +-5% 200VDC CER	51642	150-100-NP0-101J
A21C197	0160-4283	9		CAPACITOR-FXD 100PF +-5% 200VDC CER	51642	150-100-NP0-101J
A21CR1	1901-0040	1		DIODE-SWITCHING 30V 50MA 2NS DO-35	28480	1901-0040
A21CR2	1901-0040	1		DIODE-SWITCHING 30V 50MA 2NS DO-35	28480	1901-0040
A21CR3	1901-0518	8		DIODE-SM SIG SCHOTTKY	28480	1901-0518
A21CR4	1901-0518	8		DIODE-SM SIG SCHOTTKY	28480	1901-0518
A21CR5	1901-0040	1		DIODE-SWITCHING 30V 50MA 2NS DO-35	28480	1901-0040
A21CR6	1902-0777	3		DIODE-ZNR 1N825 6.2V 5% DO-7 PD=.4W	04713	1N825
A21CR7	1902-0777	3		DIODE-ZNR 1N825 6.2V 5% DO-7 PD=.4W	04713	1N825
A21CR8	1901-0518	8		DIODE-SM SIG SCHOTTKY	28480	1901-0518
A21CR9	1901-0518	8		DIODE-SM SIG SCHOTTKY	28480	1901-0518
A21CR11	1901-0040	1		DIODE-SWITCHING 30V 50MA 2NS DO-35	28480	1901-0040
A21CR12	1901-0040	1		DIODE-SWITCHING 30V 50MA 2NS DO-35	28480	1901-0040
A21CR13	1901-0040	1		DIODE-SWITCHING 30V 50MA 2NS DO-35	28480	1901-0040
A21CR16	1901-0040	1		DIODE-SWITCHING 30V 50MA 2NS DO-35	28480	1901-0040
A21CR17	1902-3054	5	1	DIODE-ZNR 3.65V 5% DO-35 PD=.4W	28480	1902-3054
A21CR18	1902-0064	1	2	DIODE-ZNR 7.5V 5% DO-35 PD=.4W TC=+.05%	28480	1902-0064
A21CR19	1902-0064	1		DIODE-ZNR 7.5V 5% DO-35 PD=.4W TC=+.05%	28480	1902-0064
A21CR20	1901-0040	1		DIODE-SWITCHING 30V 50MA 2NS DO-35	28480	1901-0040
A21CR131	1902-3030	7		DIODE-ZNR 3.01V 5% DO-7 PD=.4W TC=-.067%	28480	1902-3030
A21CR161	1901-0518	8		DIODE-SM SIG SCHOTTKY	28480	1901-0518
A21CR162	1901-0040	1		DIODE-SWITCHING 30V 50MA 2NS DO-35	28480	1901-0040
A21CR163	1901-0518	8		DIODE-SM SIG SCHOTTKY	28480	1901-0518
A21CR164	0122-0089	5		DIODE-VVC 29PF 10% C3/C25-MIN=5 BVR=30V	04713	MV109
A21CR165	1901-0518	8		DIODE-SM SIG SCHOTTKY	28480	1901-0518
A21CR166	0122-0089	5		DIODE-VVC 29PF 10% C3/C25-MIN=5 BVR=30V	04713	MV109
A21J1	1251-6567	0		CONNECTOR 21-PIN M POST TYPE	28480	1251-6567
A21J3	1810-0294	4	1	NETWORK-RESISTOR 16 PIN DIP; RES	28480	1810-0294
A21J8	1251-2969	8		CONNECTOR-PHONO SINGLE PHONO JACK; DIP	28480	1251-2969
A21J15	1251-2969	8		CONNECTOR-PHONO SINGLE PHONO JACK; DIP	28480	1251-2969
A21J16	1251-2969	8		CONNECTOR-PHONO SINGLE PHONO JACK; DIP	28480	1251-2969
A21J17A	1251-2969	8	33	CONNECTOR-PHONO SINGLE PHONO JACK; DIP	28480	1251-2969
A21J17B	1251-2969	8		CONNECTOR-PHONO SINGLE PHONO JACK; DIP	28480	1251-2969
A21J18A	1251-2969	8		CONNECTOR-PHONO SINGLE PHONO JACK; DIP	28480	1251-2969
A21J18B	1251-2969	8		CONNECTOR-PHONO SINGLE PHONO JACK; DIP	28480	1251-2969
A21L1	9100-1622	7		INDUCTOR RF-CH-MLD 24UH 5% .166DX.385LG	28480	9100-1622
A21L2	9100-1622	7		INDUCTOR RF-CH-MLD 24UH 5% .166DX.385LG	28480	9100-1622
A21L3	9100-1791	1		INDUCTOR 290NH 20% .23DX.375LG	28480	9100-1791
A21L132	9100-1791	1		INDUCTOR 290NH 20% .23DX.375LG	28480	9100-1791
A21L133	9170-0894	0		CORE-SHIELDING BEAD	28480	9170-0894
A21L161	9100-1791	1		INDUCTOR 290NH 20% .23DX.375LG	28480	9100-1791
A21L162	9140-0460	3	1	COIL-VAR 351NH-429NH Q=120 PC-MTG	28480	9140-0460
A21L163	9100-0539	3		INDUCTOR (MISC ITEM)	28480	9100-0539
A21L165	9140-0349	7		INDUCTOR RF-CH-MLD 1.1UH 5% .166DX.385LG	28480	9140-0349
A21Q1	1853-0448	0		TRANSISTOR PNP SI TO-92 PD=625MW	04713	MPSH81
A21Q2	1853-0448	0		TRANSISTOR PNP SI TO-92 PD=625MW	04713	MPSH81
A21Q3	1854-0345	8	5	TRANSISTOR NPN 2N5179 SI TO-72 PD=200MW	04713	2N5179
A21Q4	1853-0448	0		TRANSISTOR PNP SI TO-92 PD=625MW	04713	MPSH81
A21Q6	1853-0089	5		TRANSISTOR PNP 2N4917 SI PD=200MW	07263	2N4917
A21Q7	1853-0089	5		TRANSISTOR PNP 2N4917 SI PD=200MW	07263	2N4917
A21Q8	1853-0089	5		TRANSISTOR PNP 2N4917 SI PD=200MW	07263	2N4917
A21Q9	1854-0296	8	9	TRANSISTOR NPN SI TO-92 PD=310MW	28480	1854-0296
A21Q10	1853-0089	5		TRANSISTOR PNP 2N4917 SI PD=200MW	07263	2N4917
A21Q11	1854-0296	8		TRANSISTOR NPN SI TO-92 PD=310MW	28480	1854-0296
A21Q12	1853-0089	5		TRANSISTOR PNP 2N4917 SI PD=200MW	07263	2N4917
A21Q13	1854-0296	8		TRANSISTOR NPN SI TO-92 PD=310MW	28480	1854-0296
A21Q14	1854-0296	8		TRANSISTOR NPN SI TO-92 PD=310MW	28480	1854-0296
A21Q16	1854-0296	8		TRANSISTOR NPN SI TO-92 PD=310MW	28480	1854-0296
A21Q17	1855-0308	5	1	TRANSISTOR-JFET DUAL N-CHAN D-MODE SI	28480	1855-0308

See introduction to this section for ordering information
*Indicates factory selected value

Replaceable Parts

Table 6-3. Replaceable Parts

Reference Designation	HP Part Number	C D	Qty	Description	Mfr Code	Mfr Part Number
A21Q18	1855-0081	1		TRANSISTOR J-FET N-CHAN D-MODE SI	28480	1855-0081
A21Q19	1855-0081	1		TRANSISTOR J-FET N-CHAN D-MODE SI	28480	1855-0081
A21Q21	1855-0082	2	2	TRANSISTOR J-FET P-CHAN D-MODE SI	28480	1855-0082
A21Q22	1854-0215	1		TRANSISTOR NPN SI PD=350MW FT=300MHZ	04713	2N3904
A21Q23	1854-0215	1		TRANSISTOR NPN SI PD=350MW FT=300MHZ	04713	2N3904
A21Q24	1854-0215	1		TRANSISTOR NPN SI PD=350MW FT=300MHZ	04713	2N3904
A21Q25	1853 0089	5		TRANSISTOR PNP 2N4917 SI PD=200MW	07263	2N4917
A21Q26	1854-0215	1		TRANSISTOR NPN SI PD=350MW FT=300MHZ	04713	2N3904
A21Q27	1855-0081	1		TRANSISTOR J-FET N-CHAN D-MODE SI	28480	1855-0081
A21Q28	1854-0296	8		TRANSISTOR NPN SI TO-92 PD=310MW	28480	1854-0296
A21Q29	1854-0296	8		TRANSISTOR NPN SI TO-92 PD=310MW	28480	1854-0296
A21Q31	1853-0089	5		TRANSISTOR PNP 2N4917 SI PD=200MW	07263	2N4917
A21Q32	1854-0830	6	1	TRANSISTOR-DUAL NPN PD=500MW	27014	LM394
A21Q33	1855-0082	2		TRANSISTOR J-FET P-CHAN D-MODE SI	28480	1855-0082
A21Q37	1854-0215	1		TRANSISTOR NPN SI PD=350MW FT=300MHZ	04713	2N3904
A21Q38	1853-0086	2	1	TRANSISTOR PNP SI PD=310MW FT=40MHZ	27014	2N5087
A21Q39	1855-0081	1		TRANSISTOR J-FET N-CHAN D-MODE SI	28480	1855-0081
A21Q41	1854-0296	8		TRANSISTOR NPN SI TO-92 PD=310MW	28480	1854-0296
A21Q42	1854-0296	8		TRANSISTOR NPN SI TO-92 PD=310MW	28480	1854-0296
A21Q43	1853-0089	5		TRANSISTOR PNP 2N4917 SI PD=200MW	07263	2N4917
A21Q44	1853-0089	5		TRANSISTOR PNP 2N4917 SI PD=200MW	07263	2N4917
A21Q131	1853-0448	0		TRANSISTOR PNP SI TO-92 PD=625MW	04713	MPSH81
A21Q132	1854-0071	7		TRANSISTOR NPN SI PD=300MW FT=200MHZ	28480	1854-0071
A21Q161	1853-0448	0		TRANSISTOR PNP SI TO-92 PD=625MW	04713	MPSH81
A21Q162	1854-0345	8		TRANSISTOR NPN 2N5179 SI TO-72 PD=200MW	04713	2N5179
A21Q163	1854-0345	8		TRANSISTOR NPN 2N5179 SI TO-72 PD=200MW	04713	2N5179
A21Q164	1854-0345	8		TRANSISTOR NPN 2N5179 SI TO-72 PD=200MW	04713	2N5179
A21Q165	1854-0345	8		TRANSISTOR NPN 2N5179 SI TO-72 PD=200MW	04713	2N5179
A21Q166	1853-0448	0		TRANSISTOR PNP SI TO-92 PD=625MW	04713	MPSH81
A21R1	0757-0395	1	2	RESISTOR 56.2 1% .125W F TC=0+-100	24546	C4-1/8-T0-56R2-F
A21R2	0757-0419	0	3	RESISTOR 681 1% .125W F TC=0+-100	24546	C4-1/8-T0-681R-F
A21R3	0757-0419	0		RESISTOR 681 1% .125W F TC=0+-100	24546	C4-1/8-T0-681R-F
A21R4	0683-4705	8		RESISTOR 47 5% .25W FC TC=-400/+500	01121	CB4705
A21R6	0757-0421	4	3	RESISTOR 825 1% .125W F TC=0+-100	24546	C4-1/8-T0-825R-F
A21R7	0683-4715	0		RESISTOR 470 5% .25W FC TC=-400/+600	01121	CB4715
A21R8	0683-4705	8		RESISTOR 47 5% .25W FC TC=-400/+500	01121	CB4705
A21R9	0698-3440	7		RESISTOR 196 1% .125W F TC=0+-100	24546	C4-1/8-T0-196R-F
A21R11	0683-2205	9		RESISTOR 22 5% .25W FC TC=-400/+500	01121	CB2205
A21R12	0757-0438	3		RESISTOR 5.11K 1% .125W F TC=0+-100	24546	C4-1/8-T0-5111-F
A21R13	0757-0438	3		RESISTOR 5.11K 1% .125W F TC=0+-100	24546	C4-1/8-T0-5111-F
A21R14	0757-0418	9	2	RESISTOR 619 1% .125W F TC=0+-100	24546	C4-1/8-T0-619R-F
A21R16	0757-0440	7	1	RESISTOR 7.5K 1% .125W F TC=0+-100	24546	C4-1/8-T0-7501-F
A21R17	0698-3152	8	1	RESISTOR 3.48K 1% .125W F TC=0+-100	24546	C4-1/8-T0-3481-F
A21R18	0757-0444	1	2	RESISTOR 12.1K 1% .125W F TC=0+-100	24546	C4-1/8-T0-1212-F
A21R19	0757-0278	9	1	RESISTOR 1.78K 1% .125W F TC=0+-100	24546	C4-1/8-T0-1781-F
A21R21	0683-4705	8		RESISTOR 47 5% .25W FC TC=-400/+500	01121	CB4705
A21R22	0683-1525	4		RESISTOR 1.5K 5% .25W FC TC=-400/+700	01121	CB1525
A21R23	0683-6815	5		RESISTOR 680 5% .25W FC TC=-400/+600	01121	CB6815
A21R24	0683-1825	7		RESISTOR 1.8K 5% .25W FC TC=-400/+700	01121	CB1825
A21R26	0757-0395	1		RESISTOR 56.2 1% .125W F TC=0+-100	24546	C4-1/8-T0-56R2-F
A21R27	0757-0317	7		RESISTOR 1.33K 1% .125W F TC=0+-100	24546	C4-1/8-T0-1331-F
A21R28	0757-0317	7		RESISTOR 1.33K 1% .125W F TC=0+-100	24546	C4-1/8-T0-1331-F
A21R29	0683-4705	8		RESISTOR 47 5% .25W FC TC=-400/+500	01121	CB4705
A21R31	0683-3325	6		RESISTOR 3.3K 5% .25W FC TC=-400/+700	01121	CB3325
A21R32	0683-4715	0		RESISTOR 470 5% .25W FC TC=-400/+600	01121	CB4715
A21R33	0683-4705	8		RESISTOR 47 5% .25W FC TC=-400/+500	01121	CB4705
A21R34	0757-0438	3		RESISTOR 5.11K 1% .125W F TC=0+-100	24546	C4-1/8-T0-5111-F
A21R36	0757-0280	3		RESISTOR 1K 1% .125W F TC=0+-100	24546	C4-1/8-T0-1001-F
A21R37	0698-3153	9	3	RESISTOR 3.83K 1% .125W F TC=0+-100	24546	C4-1/8-T0-3831-F
A21R38	0698-0083	8	6	RESISTOR 1.96K 1% .125W F TC=0+-100	24546	C4-1/8-T0-1961-F
A21R39	0757-0401	0		RESISTOR 100 1% .125W F TC=0+-100	24546	C4-1/8-T0-101-F
A21R41	0683-6815	5		RESISTOR 680 5% .25W FC TC=-400/+600	01121	CB6815
A21R42	0698-3153	9		RESISTOR 3.83K 1% .125W F TC=0+-100	24546	C4-1/8-T0-3831-F
A21R43	0698-3153	9		RESISTOR 3.83K 1% .125W F TC=0+-100	24546	C4-1/8-T0-3831-F
A21R44	0698-0083	8		RESISTOR 1.96K 1% .125W F TC=0+-100	24546	C4-1/8-T0-1961-F
A21R46	0683-1015	7		RESISTOR 100 5% .25W FC TC=-400/+500	01121	CB1015
A21R47	0683-3325	6		RESISTOR 3.3K 5% .25W FC TC=-400/+700	01121	CB3325
A21R48	0683-1015	7		RESISTOR 100 5% .25W FC TC=-400/+500	01121	CB1015
A21R49	0698-3443	0	1	RESISTOR 287 1% .125W F TC=0+-100	24546	C4-1/8-T0-287R-F
A21R51	0757-0418	9		RESISTOR 619 1% .125W F TC=0+-100	24546	C4-1/8-T0-619R-F
A21R52	0757-0444	1		RESISTOR 12.1K 1% .125W F TC=0+-100	24546	C4-1/8-T0-1212-F
A21R53	0757-0280	3		RESISTOR 1K 1% .125W F TC=0+-100	24546	C4-1/8-T0-1001-F
A21R54	0757-0280	3		RESISTOR 1K 1% .125W F TC=0+-100	24546	C4-1/8-T0-1001-F
A21R56	0698-0083	8		RESISTOR 1.96K 1% .125W F TC=0+-100	24546	C4-1/8-T0-1961-F

See introduction to this section for ordering information
*Indicates factory selected value

Replaceable Parts

Table 6-3. Replaceable Parts

Reference Designation	HP Part Number	C D	Qty	Description	Mfr Code	Mfr Part Number
A21R57	0683-5105	4	1	RESISTOR 51 5% .25W FC TC=-400/+500	01121	CB5105
A21R58	0683-4715	0		RESISTOR 470 5% .25W FC TC=-400/+600	01121	CB4715
A21R59	0683-1015	7		RESISTOR 100 5% .25W FC TC=-400/+500	01121	CB1015
A21R61	0683-1035	1		RESISTOR 10K 5% .25W FC TC=-400/+700	01121	CB1035
A21R62	0683-1015	7		RESISTOR 100 5% .25W FC TC=-400/+500	01121	CB1015
A21R63	0757-0419	0		RESISTOR 681 1% .125W F TC=0+-100	24546	C4-1/8-T0-681R-F
A21R64	0698-0084	9		RESISTOR 2.15K 1% .125W F TC=0+-100	24546	C4-1/8-T0-2151-F
A21R65	0757-0401	0		RESISTOR 100 1% .125W F TC=0+-100	24546	C4-1/8-T0-101-F
A21R66	0683-4705	8		RESISTOR 47 5% .25W FC TC=-400/+500	01121	CB4705
A21R67	0698-0083	8		RESISTOR 1.96K 1% .125W F TC=0+-100	24546	C4-1/8-T0-1961-F
A21R68	0698-3156	2		RESISTOR 14.7K 1% .125W F TC=0+-100	24546	C4-1/8-T0-1472-F
A21R69	0698-3156	2		RESISTOR 14.7K 1% .125W F TC=0+-100	24546	C4-1/8-T0-1472-F
A21R70	0757-0401	0		RESISTOR 100 1% .125W F TC=0+-100	24546	C4-1/8-T0-101-F
A21R71	0698-4207	6	1	RESISTOR 44.2K 1% .125W F TC=0+-100	24546	C4-1/8-T0-4422-F
A21R72	0683-1025	9		RESISTOR 1K 5% .25W FC TC=-400/+600	01121	CB1025
A21R73	0683-4705	8		RESISTOR 47 5% .25W FC TC=-400/+500	01121	CB4705
A21R74	2100-3211	7	1	RESISTOR-TRMR 1K 10% C TOP-ADJ 1-TRN	28480	2100-3211
A21R75	0757-0442	9		RESISTOR 10K 1% .125W F TC=0+-100	24546	C4-1/8-T0-1002-F
A21R76	2100-3096	6	1	RESISTOR-TRMR 50K 10% C TOP-ADJ 17-TRN	32997	3292W 1-503
A21R77	0683-1065	7	1	RESISTOR 10M 5% .25W CC TC=-900/+1100	01121	CB1065
A21R78	0757-0408	3	1	RESISTOR 909K 1% .125W F TC=0+-100	28480	0757-0408
A21R79	0757-0401	0		RESISTOR 100 1% .125W F TC=0+-100	24546	C4-1/8-T0-101-F
A21R81	0683-1035	1		RESISTOR 10K 5% .25W FC TC=-400/+700	01121	CB1035
A21R82	0683-5625	3	1	RESISTOR 5.6K 5% .25W FC TC=-400/+700	01121	CB5625
A21R83	0683-2025	1		RESISTOR 2K 5% .25W FC TC=-400/+700	01121	CB2025
A21R84	0757-0289	2		RESISTOR 13.3K 1% .125W F TC=0+-100	19701	MF4C1/8-T0-1332-F
A21R86	0757-0439	4		RESISTOR 6.81K 1% .125W F TC=0+-100	24546	C4-1/8-T0-6811-F
A21R87	0683-4705	8		RESISTOR 47 5% .25W FC TC=-400/+500	01121	CB4705
A21R88	2100-3383	4	1	RESISTOR-TRMR 50 10% C TOP-ADJ 1-TRN	28480	2100-3383
A21R89	0683-4705	8		RESISTOR 47 5% .25W FC TC=-400/+500	01121	CB4705
A21R91	0698-0083	8		RESISTOR 1.96K 1% .125W F TC=0+-100	24546	C4-1/8-T0-1961-F
A21R92	0683-1025	9		RESISTOR 1K 5% .25W FC TC=-400/+600	01121	CB1025
A21R93	0683-1015	7		RESISTOR 100 5% .25W FC TC=-400/+500	01121	CB1015
A21R94	0683-1015	7		RESISTOR 100 5% .25W FC TC=-400/+500	01121	CB1015
A21R96	0757-0421	4		RESISTOR 825 1% .125W F TC=0+-100	24546	C4-1/8-T0-825R-F
A21R97	0683-2225	3		RESISTOR 2.2K 5% .25W FC TC=-400/+700	01121	CB2225
A21R98	0683-2225	3		RESISTOR 2.2K 5% .25W FC TC=-400/+700	01121	CB2225
A21R99	0698-3154	0		RESISTOR 4.22K 1% .125W F TC=0+-100	24546	C4-1/8-T0-4221-F
A21R101	0683-1025	9		RESISTOR 1K 5% .25W FC TC=-400/+600	01121	CB1025
A21R102	0683-2225	3		RESISTOR 2.2K 5% .25W FC TC=-400/+700	01121	CB2225
A21R103	0683-4705	8		RESISTOR 47 5% .25W FC TC=-400/+500	01121	CB4705
A21R104	0683-2235	5		RESISTOR 22K 5% .25W FC TC=-400/+800	01121	CB2235
A21R106	0683-1035	1		RESISTOR 10K 5% .25W FC TC=-400/+700	01121	CB1035
A21R107	2100-0567	0	1	RESISTOR-TRMR 2K 10% C TOP-ADJ 1-TRN	28480	2100-0567
A21R108	0698-0083	8		RESISTOR 1.96K 1% .125W F TC=0+-100	24546	C4-1/8-T0-1961-F
A21R109	0683-1015	7		RESISTOR 100 5% .25W FC TC=-400/+500	01121	CB1015
A21R111	0683-1015	7		RESISTOR 100 5% .25W FC TC=-400/+500	01121	CB1015
A21R112	0757-0421	4		RESISTOR 825 1% .125W F TC=0+-100	24546	C4-1/8-T0-825R-F
A21R113	0757-0416	7		RESISTOR 511 1% .125W F TC=0+-100	24546	C4-1/8-T0-511R-F
A21R114	0757-0416	7		RESISTOR 511 1% .125W F TC=0+-100	24546	C4-1/8-T0-511R-F
A21R116	0683-4705	8		RESISTOR 47 5% .25W FC TC=-400/+500	01121	CB4705
A21R117	0757-0439	4		RESISTOR 6.81K 1% .125W F TC=0+-100	24546	C4-1/8-T0-6811-F
A21R118	0683-1025	9		RESISTOR 1K 5% .25W FC TC=-400/+600	01121	CB1025
A21R119	0683-1835	9		RESISTOR 18K 5% .25W FC TC=-400/+800	01121	CB1835
A21R121	0683-1025	9		RESISTOR 1K 5% .25W FC TC=-400/+600	01121	CB1025
A21R122	0698-3162	0	1	RESISTOR 46.4K 1% .125W F TC=0+-100	24546	C4-1/8-T0-4642-F
A21R123	0757-0465	6		RESISTOR 100K 1% .125W F TC=0+-100	24546	C4-1/8-T0-1003-F
A21R124	0683-1525	4		RESISTOR 1.5K 5% .25W FC TC=-400/+700	01121	CB1525
A21R126	0683-1025	9		RESISTOR 1K 5% .25W FC TC=-400/+600	01121	CB1025
A21R130	0683-2225	3		RESISTOR 2.2K 5% .25W FC TC=-400/+700	01121	CB2225
A21R132	0757-0398	4		RESISTOR 25 1% .125W F TC=0+-100	24546	C4-1/8-T0-25R0-F
A21R133	0698-3432	7		RESISTOR 26.1 1% .125W F TC=0+-100	03888	PME55-1/8-T0-26R1-F
A21R134	0683-1035	1		RESISTOR 10K 5% .25W FC TC=-400/+700	01121	CB1035
A21R135	0683-2205	9		RESISTOR 22 5% .25W FC TC=-400/+500	01121	CB2205
A21R136	0683-1025	9		RESISTOR 1K 5% .25W FC TC=-400/+600	01121	CB1025
A21R137	0683-1035	1		RESISTOR 10K 5% .25W FC TC=-400/+700	01121	CB1035
A21R138	0698-4443	2	1	RESISTOR 4.53K 1% .125W F TC=0+-100	24546	C4-1/8-T0-4531-F
A21R140	0683-1035	1		RESISTOR 10K 5% .25W FC TC=-400/+700	01121	CB1035
A21R141	0698-4422	7	1	RESISTOR 1.27K 1% .125W F TC=0+-100	24546	C4-1/8-T0-1271-F
A21R142	0683-1025	9		RESISTOR 1K 5% .25W FC TC=-400/+600	01121	CB1025
A21R143	0683-1015	7		RESISTOR 100 5% .25W FC TC=-400/+500	01121	CB1015
A21R144	0683-3325	6		RESISTOR 3.3K 5% .25W FC TC=-400/+700	01121	CB3325
A21R145	0683-1025	9		RESISTOR 1K 5% .25W FC TC=-400/+600	01121	CB1025
A21R146	0683-1035	1		RESISTOR 10K 5% .25W FC TC=-400/+700	01121	CB1035
A21R147	0683-1035	1		RESISTOR 10K 5% .25W FC TC=-400/+700	01121	CB1035

See introduction to this section for ordering information
*Indicates factory selected value

Table 6-3. Replaceable Parts

Reference Designation	HP Part Number	C D	Qty	Description	Mfr Code	Mfr Part Number
A21R148	0683-7515	4	1	RESISTOR 750 5% .25W FC TC=-400/+600	01121	CB7515
A21R149	0683-1035	1		RESISTOR 10K 5% .25W FC TC=-400/+700	01121	CB1035
A21R150	0683-3325	6		RESISTOR 3.3K 5% .25W FC TC=-400/+700	01121	CB3325
A21R151	0683-1035	1		RESISTOR 10K 5% .25W FC TC=-400/+700	01121	CB1035
A21R152	0683-1035	1		RESISTOR 10K 5% .25W FC TC=-400/+700	01121	CB1035
A21R161	0683-2415	3	1	RESISTOR 240 5% .25W FC TC=-400/+600	01121	CB2415
A21R162	0683-4705	8		RESISTOR 47 5% .25W FC TC=-400/+500	01121	CB4705
A21R163	0683-1045	3		RESISTOR 100K 5% .25W FC TC=-400/+800	01121	CB1045
A21R164	0683-4735	4		RESISTOR 47K 5% .25W FC TC=-400/+800	01121	CB4735
A21R165	0683-1045	3		RESISTOR 100K 5% .25W FC TC=-400/+800	01121	CB1045
A21R166	0683-4735	4		RESISTOR 47K 5% .25W FC TC=-400/+800	01121	CB4735
A21R167	0683-4725	2		RESISTOR 4.7K 5% .25W FC TC=-400/+700	01121	CB4725
A21R168	0683-1035	1		RESISTOR 10K 5% .25W FC TC=-400/+700	01121	CB1035
A21R169	0698-3518	0	1	RESISTOR 7.32K 1% .125W F TC=0+-100	24546	C4-1/8-T0-7321-F
A21R170	0683-2425	3	1	RESISTOR 2.4K 5% .25W FC TC=-400/+700	01121	CB2425
A21R171	0757-1094	9	1	RESISTOR 1.47K 1% .125W F TC=0+-100	24546	C4-1/8-T0-1471-F
A21R172	0683-1025	9		RESISTOR 1K 5% .25W FC TC=-400/+600	01121	CB1025
A21R173	0683-1045	3		RESISTOR 100K 5% .25W FC TC=-400/+800	01121	CB1045
A21R174	0683-5125	0		RESISTOR 5.1K 5% .25W FC TC=-400/+700	01121	CB5125
A21R176	0683-4705	8		RESISTOR 47 5% .25W FC TC=-400/+500	01121	CB4705
A21R177	0757-0417	8	1	RESISTOR 562 1% .125W F TC=0+-100	24546	C4-1/8-T0-5620-F
A21R178	0757-0401	0		RESISTOR 100 1% .125W F TC=0+-100	24546	C4-1/8-T0-101-F
A21R179	0683-3915	0	3	RESISTOR 390 5% .25W FC TC=-400/+600	01121	CB3915
A21R181	0683-3915	0		RESISTOR 390 5% .25W FC TC=-400/+600	01121	CB3915
A21R182	0683-1525	4		RESISTOR 1.5K 5% .25W FC TC=-400/+700	01121	CB1525
A21R183	0683-1025	9		RESISTOR 1K 5% .25W FC TC=-400/+600	01121	CB1025
A21R184	0757-0280	3		RESISTOR 1K 1% .125W F TC=0+-100	24546	C4-1/8-T0-1001-F
A21R186	0757-0416	7		RESISTOR 511 1% .125W F TC=0+-100	24546	C4-1/8-T0-511R-F
A21R187	0698-4123	3		RESISTOR 499 1% .125W F TC=0+-100	24546	C4 1/8-T0-499R-F
A21R188	0757-0280	3		RESISTOR 1K 1% .125W F TC=0+-100	24546	C4-1/8-T0-1001-F
A21R189	0757-0401	0		RESISTOR 100 1% .125W F TC=0+-100	24546	C4-1/8-T0-101-F
A21R191	0757-0280	3		RESISTOR 1K 1% .125W F TC=0+-100	24546	C4-1/8-T0-1001-F
A21R192	0757-0442	9		RESISTOR 10K 1% .125W F TC=0+-100	24546	C4-1/8-T0-1002-F
A21R193	0698-3279	0		RESISTOR 4.99K 1% .125W F TC=0+-100	24546	C4-1/8-T0-4991-F
A21R194	0757-0401	0		RESISTOR 100 1% .125W F TC=0+-100	24546	C4-1/8-T0-101-F
A21R196	0757-0452	1	1	RESISTOR 27.4K 1% .125W F TC=0+-100	24546	C4-1/8-T0-2742-F
A21R197	0698-3440	7		RESISTOR 196 1% .125W F TC=0+-100	24546	C4-1/8-T0-196R-F
A21R198	0698-4474	9	1	RESISTOR 8.45K 1% .125W F TC=0+-100	24546	C4-1/8-T0-8451-F
A21R199	0757-0439	4		RESISTOR 6.81K 1% .125W F TC=0+-100	24546	C4-1/8-T0-6811-F
A21R200	0757-0394	0	1	RESISTOR 51.1 1% .125W F TC=0+-100	24546	C4-1/8-T0-51R1-F
A21R201	0757-0280	3		RESISTOR 1K 1% .125W F TC=0+-100	24546	C4-1/8-T0-1001-F
A21R202	0757-0401	0		RESISTOR 100 1% .125W F TC=0+-100	24546	C4-1/8-T0-101-F
A21R203	0698-3279	0		RESISTOR 4.99K 1% .125W F TC=0+-100	24546	C4-1/8-T0-4991-F
A21R204	0757-0442	9		RESISTOR 10K 1% .125W F TC=0+-100	24546	C4-1/8-T0-1002-F
A21R205	0757-0283	6		RESISTOR 2K 1% .125W F TC=0+-100	24546	C4-1/8-T0-2001-F
A21R206	0757-0280	3		RESISTOR 1K 1% .125W F TC=0+-100	24546	C4-1/8-T0-1001-F
A21R207	0683-3315	4	1	RESISTOR 330 5% .25W FC TC=-400/+600	01121	CB3315
A21R208	0683-4325	8	1	RESISTOR 4.3K 5% .25W FC TC=-400/+700	01121	CB4325
A21R209	0683-3915	0		RESISTOR 390 5% .25W FC TC=-400/+600	01121	CB3915
A21R210	0683-4705	8		RESISTOR 47 5% .25W FC TC=-400/+500	01121	CB4705
A21R212	0757-0439	4		RESISTOR 6.81K 1% .125W F TC=0+-100	24546	C4-1/8-T0-6811-F
A21R213	0757-0401	0		RESISTOR 100 1% .125W F TC=0+-100	24546	C4-1/8-T0-101-F
A21R214	0757-0442	9		RESISTOR 10K 1% .125W F TC=0+-100	24546	C4-1/8-T0-1002-F
A21R215	0683-2205	9		RESISTOR 22 5% .25W FC TC=-400/+500	01121	CB2205
A21R216	0757-0279	0		RESISTOR 3.16K 1% .125W F TC=0+-100	24546	C4-1/8-T0-3161-F
A21U1	1820-0817	8	1	IC FF ECL D-M/S DUAL	04713	MC10131P
A21U2	1821-0001	4		TRANSISTOR ARRAY 14-PIN PLSTC DIP	3L585	CA3046
A21U4	1820-1196	8		IC FF TTL LS D-TYPE POS-EDGE-TRIG COM	01295	SN74LS174N
A21U5	1820-1112	8		IC FF TTL LS D-TYPE POS-EDGE-TRIG	01295	SN74LS74AN
A21U6	1826-0021	8	1	IC OP AMP GP TO-99 PKG	27014	LM310H
A21U7	1820-0629	0		IC FF TTL S J-K NEG-EDGE-TRIG	01295	SN74S112N
A21U8	1820-0697	2	1	IC DRVR TTL S NAND LINE DUAL 4-INP	01295	SN74S140N
A21U9	1820-1279	8		IC CNTR TTL LS DECD UP/DOWN SYNCHRO	01295	SN74LS190N
A21U10	1826-0043	4		IC OP AMP GP TO-99 PKG	3L585	CA3077
A21U11	1820-1279	8		IC CNTR TTL LS DECD UP/DOWN SYNCHRO	01295	SN74LS190N
A21U12	1820-0681	4	3	IC GATE TTL S NAND QUAD 2-INP	01295	SN74S00N
A21U13	1820-0629	0		IC FF TTL S J-K NEG-EDGE-TRIG	01295	SN74S112N
A21U14	1820-1196	8		IC FF TTL LS D-TYPE POS-EDGE-TRIG COM	01295	SN74LS174N
A21U15	1820-1196	8		IC FF TTL LS D-TYPE POS-EDGE-TRIG COM	01295	SN74LS174N
A21U17	1820-1322	2		IC GATE TTL S NOR QUAD 2-INP	01295	SN74S02N
A21U18	1820-0629	0		IC FF TTL S J-K NEG-EDGE-TRIG	01295	SN74S112N
A21U19	1820-2004	9	1	IC MISC NMOS	28480	1820-2004
A21U21	1820-0683	6		IC INV TTL S HEX 1-INP	01295	SN74S04N
A21U22	1820-0681	4		IC GATE TTL S NAND QUAD 2-INP	01295	SN74S00N
A21U23	1820-0681	4		IC GATE TTL S NAND QUAD 2-INP	01295	SN74S03N

See introduction to this section for ordering information
*Indicates factory selected value

Replaceable Parts

Table 6-3. Replaceable Parts

Reference Designation	HP Part Number	C D	Qty	Description	Mfr Code	Mfr Part Number
A21U24	1820-0629	0		IC FF TTL S J-K NEG-EDGE-TRIG	01295	SN74S112N
A21U25	1820-0693	8		IC FF TTL S D-TYPE POS-EDGE-TRIG	01295	SN74S74N
A21U26	1820-0693	8		IC FF TTL S D-TYPE POS-EDGE-TRIG	01295	SN74S74N
A21U27	1820-0629	0		IC FF TTL S J-K NEG-EDGE-TRIG	01295	SN74S112N
A21U28	1820-1641	8		IC DRVR TTL LS BUS DRVR HEX 1-INP	01295	SN74LS365AN
A21U29	1820-0629	0		IC FF TTL S J-K NEG-EDGE-TRIG	01295	SN74S112N
A21U30	1820-0629	0		IC FF TTL S J-K NEG-EDGE-TRIG	01295	SN74S112N
A21U31	1820-1144	6		IC GATE TTL LS NOR QUAD 2-INP	01295	SN74LS02N
A21U32	1820-0629	0		IC FF TTL S J-K NEG-EDGE-TRIG	01295	SN74S112N
A21U33	1826-0111	7		IC OP AMP GP DUAL TO-99 PKG	3L595	CA1458T
A21U34	1820-0802	1		IC GATE ECL NOR QUAD 2-INP	04713	MC10102P
	0360-1716	1		TERMINAL-STUD SGL-PIN PRESS-MTG	28480	0360-1716
	1460-1336	4		WIREFORM CU BRT-TIN	28480	1460-1336
	7121-1234	9		LABEL CAUTION 1.925 IN-WD 2.24-IN-LG	28480	7121-1234
A23	03325-66523	4	2	ATTENUATOR ASSEMBLY	28480	03325-66523
A23C1	0160-4571	8		CAPACITOR-FXD .1UF +80-20% 50VDC CER	28480	0160-4571
A23C2	0160-4571	8		CAPACITOR-FXD .1UF +80-20% 50VDC CER	28480	0160-4571
A23C3	0160-3558	9		CAPACITOR-FXD .1UF +-20% 50VDC CER	28480	0160-3558
A23C7	0160-3558	9		CAPACITOR-FXD .1UF +-20% 50VDC CER	28480	0160-3558
A23C8	0160-3558	9		CAPACITOR-FXD .1UF +-20% 50VDC CER	28480	0160-3558
A23C9	0160-3558	9		CAPACITOR-FXD .1UF +-20% 50VDC CER	28480	0160-3558
A23C10	0160-3558	9		CAPACITOR-FXD .1UF +-20% 50VDC CER	28480	0160-3558
A23C11	0160-3558	9		CAPACITOR-FXD .1UF +-20% 50VDC CER	28480	0160-3558
A23C12	0160-3558	9		CAPACITOR-FXD .1UF +-20% 50VDC CER	28480	0160-3558
A23C13	0160-3558	9		CAPACITOR-FXD .1UF +-20% 50VDC CER	28480	0160-3558
A23C14	0160-3558	9		CAPACITOR-FXD .1UF +-20% 50VDC CER	28480	0160-3558
A23C15	0160-4571	8		CAPACITOR-FXD .1UF +80-20% 50VDC CER	28480	0160-4571
A23C16	0160-4571	8		CAPACITOR-FXD .1UF +80-20% 50VDC CER	28480	0160-4571
A23C17	0160-4571	8		CAPACITOR-FXD .1UF +80-20% 50VDC CER	28480	0160-4571
A23J30	1251-5064	0		CONNECTOR 14-PIN M POST TYPE	28480	1251-5064
A23J1	1251-2969	8		CONNECTOR-PHONO SINGLE PHONO JACK; DIP	28480	1251-2969
A23J2	1251-2969	8		CONNECTOR-PHONO SINGLE PHONO JACK; DIP	28480	1251-2969
A23J3	1251-2969	8		CONNECTOR-PHONO SINGLE PHONO JACK; DIP	28480	1251-2969
A23J4	1251-2969	8		CONNECTOR-PHONO SINGLE PHONO JACK; DIP	28480	1251-2969
A23K1	0490-1141	1	4	RELAY 4C 12VC-COIL 12VDC	28480	0490-1141
A23K2	0490-1141	1		RELAY 4C 12VC-COIL 12VDC	28480	0490-1141
A23K3	0490-1141	1		RELAY 4C 12VC-COIL 12VDC	28480	0490-1141
A23K4	0490-1141	1		RELAY 4C 12VC-COIL 12VDC	28480	0490-1141
A23R1	0699-0065	8	2	RESISTOR 51.01 .25% .5W F TC=0+-50	28480	0699-0065
A23R2	0699-0065	8		RESISTOR 51.01 .25% .5W F TC=0+-50	28480	0699-0065
A23R3	0699-0273	0	1	RESISTOR 2.15K .1% .125W F TC=0+-25	28480	0699-0273
A23R4	0699-0274	1	1	RESISTOR 350 .1% .125W F TC=0+-25	28480	0699-0274
A23R5	0698-8258	5	1	RESISTOR 247.5 .1% .25W F TC=0+-25	19701	MF52C1/4-T9-247R5-B
A23R6	0698-7984	2	2	RESISTOR 61.1 .1% .5W F TC=0+-50	28480	0698-7984
A23R7	0698-7984	2		RESISTOR 61.1 .1% .5W F TC=0+-50	28480	0698-7984
A23R8	0699-0066	9	1	RESISTOR 66.7 .25% .25W F TC=0+-50	28480	0699-0066
A23R9	0698-7448	3	2	RESISTOR 100 .1% .25W F TC=0+-25	19701	MF52C1/4-T9-100R-B
A23R10	0698-7448	3		RESISTOR 100 .1% .25W F TC=0+-25	19701	MF52C1/4-T9-100R-B
	7121-1234	9		LABEL CAUTION 1.925 IN-WD 2.24-IN-LG	28480	7121-1234

See introduction to this section for ordering information
*Indicates factory selected value

Table 6-3. Replaceable Parts

Reference Designation	HP Part Number	C D	Qty	Description	Mfr Code	Mfr Part Number
				CHASSIS AND MISCELLANEOUS PARTS		
	03325-20601	3	4	SHLD TOP	28480	03325-20601
	03325-20602	4	4	SHLD-BOTTOM	28480	03325-20602
	03325-04104	7	1	COVER NO 2	28480	03325-04104
B1	3160-0209	4	1	FAN-TBAX 45-CFM 115V 50/60-Hz 1.5-THK (WITHOUT CABLE)	28480	3160-0209
	03325-61612	4		FAN (WITH CABLE)	28480	03325-61612
A2	03325-66502	9		PWR S-PLY	28480	03325-66502
A3	03325-66503	0		PC ASSY-SIG-SCE	28480	03325-66503
A5	03325-66505	2		PC ASSY-KEYBD	28480	03325-66505
A6	03325-66506	3		PC ASSY-CONTROL	28480	03325-66506
A14	03325-66514	3		PC ASSY-FUNCTION	28480	03325-66514
A8	03325-66508			PC ASSY-HI VOLT (OPT. 002)	28480	03325-66508
A21	03325-66521	2		PC ASSY-FFS D/A	28480	03325-66521
A23	03325-66523	4		PC ASSY-ATTEN	28480	03325-66523
A9	03325-66509			PC-ASSY OVEN (OPT. 001)	28480	03325-66509
C2	0150-0012	3		CAPACITOR-FXD .01UF +-20% 1KVDC CER	56289	C023A102J103MS38
C3	0150-0012	3		CAPACITOR-FXD .01UF +-20% 1KVDC CER	56289	C023A102J103MS38
C4	0150-0012	3		CAPACITOR-FXD .01UF +-20% 1KVDC CER	56289	C023A102J103MS38
C5	0150-0012	3		CAPACITOR-FXD .01UF +-20% 1KVDC CER	56289	C023A102J103MS38
F1	2110-0001	8	1	FUSE 1A 250V NTD 1.25X.25 UL	75915	312001
F1*	2110-0012	1	1	FUSE .5A 250V NTD 1.25X.25 UL	28480	2110-0012
J1	1250-1558	7	12	ADAPTER-COAX STR F-BNC F-RCA-PHONO	28480	1250-1558
J2	1250-1558	7		ADAPTER-COAX STR F-BNC F-RCA-PHONO	28480	1250-1558
J4	1250-1558	7		ADAPTER-COAX STR F-BNC F-RCA-PHONO	28480	1250-1558
J5	1250-1558	7		ADAPTER-COAX STR F-BNC F-RCA-PHONO	28480	1250-1558
J6	1250-1558	7		ADAPTER-COAX STR F-BNC F-RCA-PHONO	28480	1250-1558
J7	1250-1558	7		ADAPTER-COAX STR F-BNC F-RCA-PHONO	28480	1250-1558
J8	1250-1558	7		ADAPTER-COAX STR F-BNC F-RCA-PHONO	28480	1250-1558
J9	1250-1558	7		ADAPTER-COAX STR F-BNC F-RCA-PHONO	28480	1250-1558
J10	1250-1558	7		ADAPTER-COAX STR F-BNC F-RCA-PHONO	28480	1250-1558
J11	1250-1558	7		ADAPTER-COAX STR F-BNC F-RCA-PHONO	28480	1250-1558
J12	1250-1558	7		ADAPTER-COAX STR F-BNC F-RCA-PHONO	28480	1250-1558
J13	1250-1558	7		ADAPTER-COAX STR F-BNC F-RCA-PHONO	28480	1250-1558
MP1	03325-04301	6	1	PNL-DRESS	28480	03325-04301
MP2	5040-6928	4	1	DIVIDER STRIP	28480	5040-6928
MP3	03325-29301	8	1	WINDOW	28480	03325-29301
MP4	03325-00201	7	1	SUB PNL-FRT	28480	03325-00201
MP5	5020-8803	6	1	FRONT FRAME	28480	5020-8803
MP6	5040-7202	9	1	TRIM TOP	28480	5040-7202
MP7	5020-8837	6	4	CORNER STRUT	28480	5020-8837
MP8	5060-9880	5	2	SIDE COVER	28480	5060-9080
MP9	5040-7219	8	2	STRAP HDL CAP-FR	28480	5040-7219
MP10	5060-9804	3	2	STRAP HDL 181N	28480	5060-9804
MP11	5040-7220	1	2	STRAP HDL CAP-R	28480	5040-7220
MP12	5060-9835	0	1	TOP COVER	28480	5060-9835
MP13	03325-00202	8	1	PNL-REAR	28480	03325-00202
MP14	5020-8804	7	1	REAR-CASTING	28480	5020-8804
MP15	03325-06602	4	1	FRAME-MAIN	28480	03325-06602
MP17	5001-0439	8	1	SIDE TRIM	28480	5001-0439
MP18	5060-9847	4	1	BOTTOM COVER	28480	5060-9847
MP19	5040-7201	8	1	FOOT	28480	5040-7201
MP20	1460-1345	5	2	TILT STAND SST	28480	1460-1345
MP21	03325-21101	0	1	HEAT SINK	28480	03325-21101
MP22	3150-0228	6	1	FILTER SCREEN STEEL 3.44-WD 3.44-LG	28480	3150-0228
MP23	3150-0227	5	1	INSULATION-POLYE .25-THK	28480	3150-0227
MP24	3160-0201	6	1	FAN GRILLE	28480	3160-0201
MP25	1400-1229	8	5	CLAMP-CABLE .375-DIA 1-WD NYL	28480	1400-1229
MP26	5040-6898	7	3	LITE PIPE	28480	5040-6898
MP27	00310-48801	0	20	WASHER, SHOULDERED	28480	00310-48801
MP28	3050-0604	0		WASHER-FL MTLC 7/16 IN .5-IN-ID	28480	3050-0604
MP29	0360-1089	1	4	TERMINAL-SLDR LUG PL-MTG FOR-#1/2-SCR	28480	0360-1089
MP32	0510-0153	7	12	THREADED INSERT-NUT 6-32 .058-IN-LG SST	28480	0510-0153
MP33	0340-0564	3		INSULATOR-XSTR THRM-CNDCT	28480	0340-0564
MP34	03325-00601	1	1	SHIELD-RF	28480	03325-00601
R1	0683-1015	7		RESISTOR 100 5% .25W FC TC=-400/+500	01121	CB1015
T1	9100-4099	8	1	TRANSFORMER-POWER 100/120/220/240 VAC	28480	9100-4099
W1	03325-61602	0	1	CBL ASSY-SIGNAL	28480	03325-61602
W2	03325-61617	7	1	CBL ASSY-SYNC	28480	03325-61617
W3	P/O 03325-61601	6	8	CABLE ASSY - 20-60 REAR	28480	P/O 03325-61601
	8120-2585	4	5	UNMARKED W3	28480	8120-2585
W4	P/O 03325-61601	6		CABLE ASSY - 0-20 REAR	28480	P/O 03325-61601
	8120-2585	4		UNMARKED W4	28480	8120-2585

See introduction to this section for ordering information
*Indicates factory selected value

Replaceable Parts

Table 6-3. Replaceable Parts

Reference Designation	HP Part Number	CD	Qty	Description	Mfr Code	Mfr Part Number
W5	P/O 03325-61601	6		CABLE ASSY-REAR SYNC	28480	P/O 03325-61601
	8120-2585	4		UNMARKED W5	28480	8120-2585
W6	8120-2491	1	1	CABLE ASSY 24AWG 24-CNDCT	28480	8120-2491
W7	P/O 03325-61601	6		CABLE ASSY-AMPTD MOD	28480	P/O 03325-61601
	8120-2585	4		UNMARKED W7	28480	8120-2585
W8	P/O 03325-61601	6		CABLE ASSY - 108KHZ	28480	P/O 03325-61601
	8120-2585	4		UNMARKED W8	28480	8120-2585
W9	P/O 03325-61601	6		CABLE ASSY-2 MHZ	28480	P/O 03325-61601
	8120-2587	6	2	UNMARKED W9	28480	8120-2587
W10	P/O 03325-61601	6		CABLE ASSY - 1MHZ	28480	P/O 03325-61601
	8120-2587	6		UNMARKED W10	28480	8120-2587
W11	P/O 03325-61601	6		CABLE ASSY-EXTREF	28480	P/O 03325-61601
	8120-2586	5	1	UNMARKED W11	28480	8120-2586
W12	03325-61604	2	1	CBL ASSY-Z BLK	28480	03325-61604
W13	03325-61619	9	1	CBL ASSY-MKR	28480	03325-61619
W14	03325-61620	2	1	CBL ASSY	28480	03325-61620
W15	03325-61606	4	1	CBL ASSY-VTO	28480	03325-61606
W16	03325-61607	5	1	CBL ASSY-ΘM	28480	03325-61607
W17	03325-61608	6	1	CBL ASSY-PHASE DET	28480	03325-61608
W18	03325-61609	7	1	CBL ASSY-S&H	28480	03325-61609
W19	03325-61610	0	1	CABLE ASSY-OVEN	28480	03325-61610
W20	03325-61605	3	1	CABLE ASSY - HI V1	28480	03325-61605
W21	03325-61621	3	1	CABLE ASSY - HI V2	28480	03325-61621
W22	03325-61611	1	1	CBL ASSY-PWR CON	28480	03325-61611
W23	03325-61603	1	1	CBL ASSY-ALC	28480	03325-61603
W24	03325-61618	8	1	CBL ASSY-MXR	28480	03325-61618
W25	03325-61612	2	1	CBL ASSY-FAN	28480	03325-61612
W26	03325-61613	3	1	CBL ASSY-HPIB	28480	03325-61613
W27	03325-61614	4	1	CBL ASSY-KEYBD	28480	03325-61614
W28	P/O 9100-4099	1	1	CABLE ASSY-HIGH AMP POWER (OP 002)	28480	P/O 9100-4099
W29	03325-61616	6	1	CABLE ASSY-OVEN POWER (OP 001)	28480	03325-61616
W30	8120-3216	0	1	FLAT RIBBON ASSY 28-AWG 14-COND	28480	8120-3216
W31	8120-3108	9	3	FLAT RIBBON ASSY 28-AWG 21-COND 5-IN-LG	28480	8120-3108
W32	8120-3108	9		FLAT RIBBON ASSY 28-AWG 21-COND 5-IN-LG	28480	8120-3108
W33	8120-3108	9		FLAT RIBBON ASSY 28-AWG 21-COND 5-IN-LG	28480	8120-3108
W34	8120-1348	5	1	CABLE ASSY 18AWG 3-CNDCT BLK-JKT	28480	8120-1348
W35	03325-61601	9	1	CBL ASSY-COMPLETE INCLUDES W3, 4, 5, 7, 8, 9, 10, 11	28480	03325-61601
W36	03325-61622	4	1	CABLE ASSY +15V	28480	03325-61622
W37	03325-61623	5	2	CABLE ASSY +15V UNREG	28480	03325-61623
W40	03325-61623	3		CBL ASSY-OUTPUT	28480	03325-61623
XCF1	2110-0545	5	1	FUSEHOLDER CAP BAYONET; 6.3A, 250V MAX	28480	2110-0545
XF1	2110-0543	3	1	FUSEHOLDER BODY EXTR PST; BAYONET; TND	28480	2110-0543
	00310-48001	0	1	WASHER SHLDR	28480	00310-48001
	03325-04105	8	1	COVER	28480	03325-04105
	03325-90002	5	1	OP/SVC MANL-A	28480	03325-90002
	03325-90013	8	1	OP MANL-A	28480	03325-90013
	0360-1610	4	2	TERMINAL-SLDR LUG PL-MTG FOR-#6-SCR	28480	0360-1610
	0361-0911	9	2	RIVET-SEMI-TUBULAR	28480	0361-0911
	0380-0111	0	48	STANDOFF-RVT-ON .25-IN-LG 6-32THD	00000	ORDER BY DESCRIPTION
	0380-0644	4	2	STANDOFF-HEX .327-IN-LG 6-32THD	00000	ORDER BY DESCRIPTION
	0460-1336	3	1	TAPE-INDL .5-IN-W .0035-IN-T POLYE-FLM	28480	0460-1336
	0590-0167	1	4	NUT-THUMB 6-32-THD BRS	28480	0590-0167
	0590-0343	5	18	THREADED INSERT-NUT 4-40 .062-IN-LG	28480	0590-0343
	0624-0208	4	9	SCREW-TPG 6-32 .5-IN-LG PAN-HD-POZI STL	28480	0624-0208
	0624-0237	7		SCREW-TPG 4-40 .25-IN-LG PAN-HD-POZI STL	00000	ORDER BY DESCRIPTION
	0890-0012	1	1	SLEEVING-FLEX .04-ID NEMA-3 .016-WALL	28480	0890-0012
	0890-0870	9	1	TUBING-HS .093-D/.046-RCVD .02-WALL	00000	ORDER BY DESCRIPTION
	1205-0356	6	1	HEAT SINK	28480	1205-0356
	1400-0249	0	8	CABLE TIE .062-.625-DIA .091-WD NYL	06383	PLT1M-8
	1400-0719	9	1	CABLE TIE .062-1.125-DIA .14-WD NYL	28480	1400-0719
	2190-0020	9	12	WASHER-LK HLCL NO. 5 .128-IN-ID	28480	2190-0020
	2190-0034	5	2	WASHER-LK HLCL NO. 10 .194-IN-ID	28480	2190-0034
	2190-0073	2	4	WASHER-LK HLCL NO. 8 .168-IN-ID	28480	2190-0073
	2190-0575	9	1	WASHER-LK INTL T 1/2 IN .64-IN-ID	28480	2190-0575
	2190-0918	4	6	WASHER-LK HLCL NO. 6 .141-IN-ID	28480	2190-0918
	2200-0101	0	11	SCREW-MACH 4-40 .188-IN-LG PAN-HD-POZI	00000	ORDER BY DESCRIPTION
	2200-0103	2		SCREW-MACH 4-40 .25-IN-LG PAN-HD-POZI	28480	2200-0103
	2200-0123	6	12	SCREW-MACH 4-40 1.25-IN-LG PAN-HD-POZI	00000	ORDER BY DESCRIPTION
	2360-0113	2		SCREW-MACH 6-32 .25-IN-LG PAN-HD-POZI	00000	ORDER BY DESCRIPTION
	2360-0114	3	5	SCREW-MACH 6-32 .25-IN-LG 82 DEG	00000	ORDER BY DESCRIPTION
	2360-0114	3		SCREW-MACH 6-32 .25-IN-LG 82 DEG	00000	ORDER BY DESCRIPTION
	2360-0115	4	5	SCREW-MACH 6-32 .312-IN-LG PAN-HD-POZI	00000	ORDER BY DESCRIPTION
	2360-0125	6	4	SCREW-MACH 6-32 .75-IN-LG PAN-HD-POZI	00000	ORDER BY DESCRIPTION
	2360-0201	9	1	SCREW-MACH 6-32 .5-IN-LG PAN-HD-POZI	00000	ORDER BY DESCRIPTION
	2420-0002	6	4	NUT-HEX-DBL-CHAM 6-32-THD .109-IN-THK	28480	2420-0002
	2510-0192	6	16	SCREW-MACH 8-32 .25-IN-LG 100 DEG	00000	ORDER BY DESCRIPTION
	2580-0004	6	4	NUT-HEX-DBL-CHAM 8-32-THD .125-IN-THK	00000	ORDER BY DESCRIPTION

See introduction to this section for ordering information
*Indicates factory selected value

Replaceable Parts

Table 6-3. Replaceable Parts

Reference Designation	HP Part Number	C D	Qty	Description	Mfr Code	Mfr Part Number
	3050-0027	1	4	WASHER-FL MTLC NO. 10 .203-IN-ID	28480	3050-0027
	3050-0066	8	2	WASHER-FL MTLC NO. 6 .147-IN-ID	28480	3050-0066
	3050-0716	5		WASHER-FL MTLC NO. 5 .128-IN-ID	28480	3050-0716
	3050-0835	9	1	WASHER-FL NM 9/16 IN .63-IN-ID .75-IN-OD	28480	3050-0835
	6960-0027	3	1	PLUG-HOLE .625	28480	6960-0027
	7120-6482	7	1	LABEL-INFORMATION .875-IN-WD 1.725-IN-LG	28480	7120-6482
	7120-8539	9	1	LABEL-WARNING 1.3-IN-WD 1.6-IN-LG VINYL	28480	7120-8539
	9211-2257	1	1	CARTON-CORR RSC 26.75-IN-LG 24.75-IN-WD	28480	9211-2257
	9282-0906	2	1	CHANNEL W/ELASTIC GRIP .5-IN-WD	28480	9282-0906
	JUMPER	0		CUT JUMPER	28480	JUMPER
	LUG-JUMPER	4		CUT JUMPER	28480	LUG-JUMPER

See introduction to this section for ordering information
*Indicates factory selected value

Fig 6-1 Sht 1 of 4

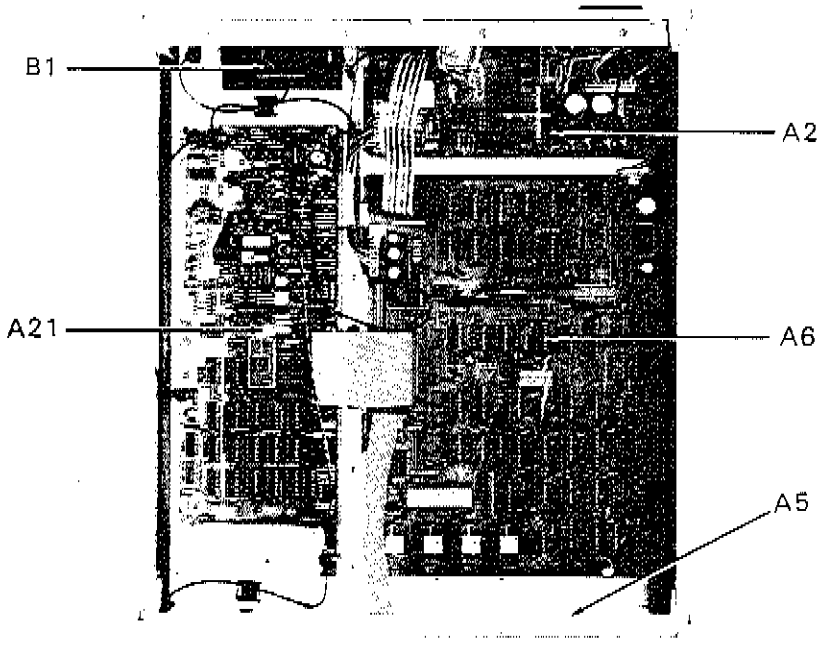

TOP VIEW

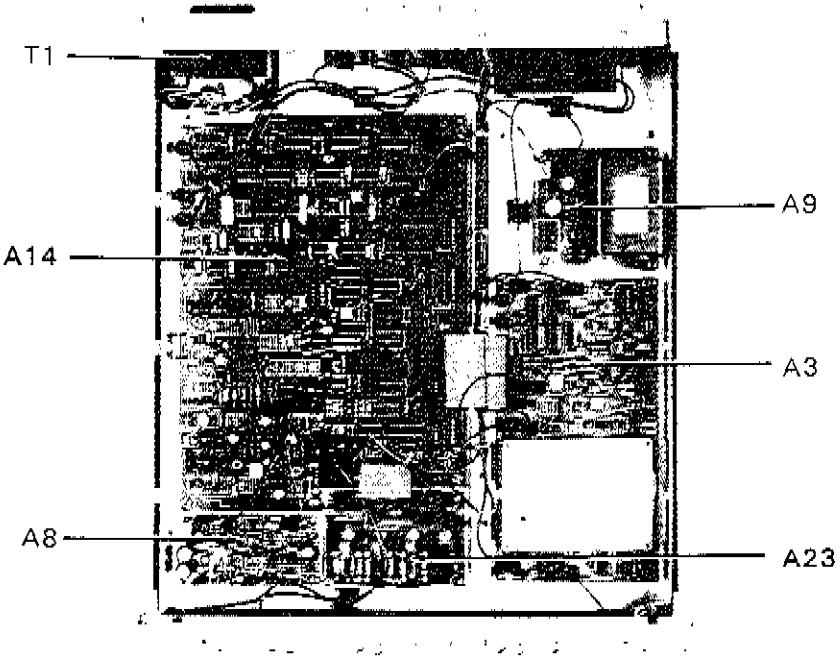

BOTTOM VIEW

Fig 6-1 Sht 2 of 4

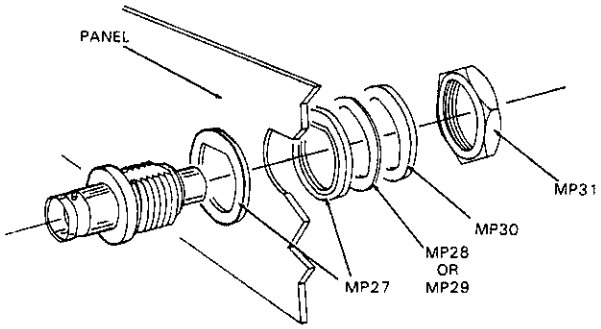

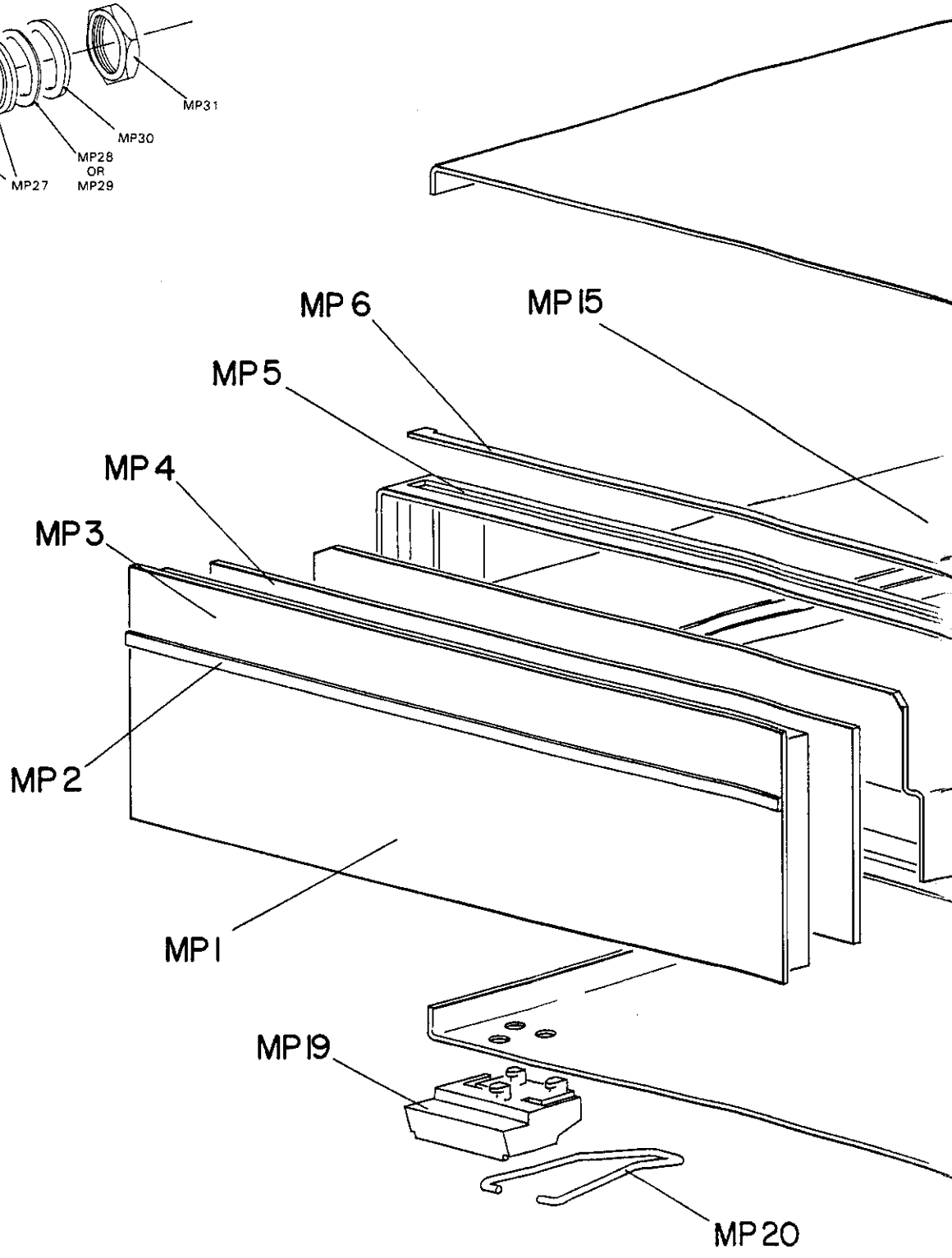

Fig 6-1
Sht 3 of 4

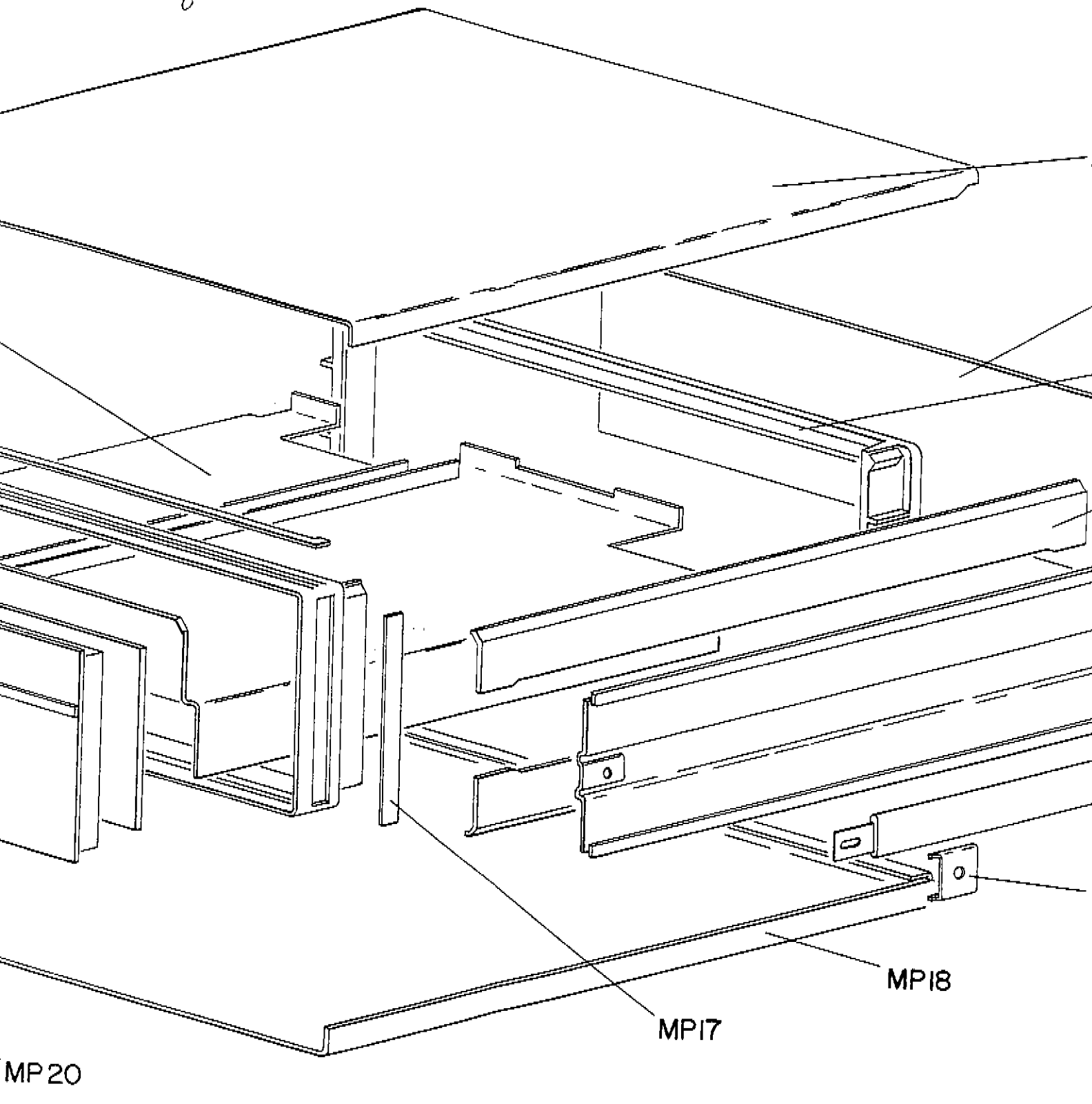

Fig 6-1
Sht 4 of 4

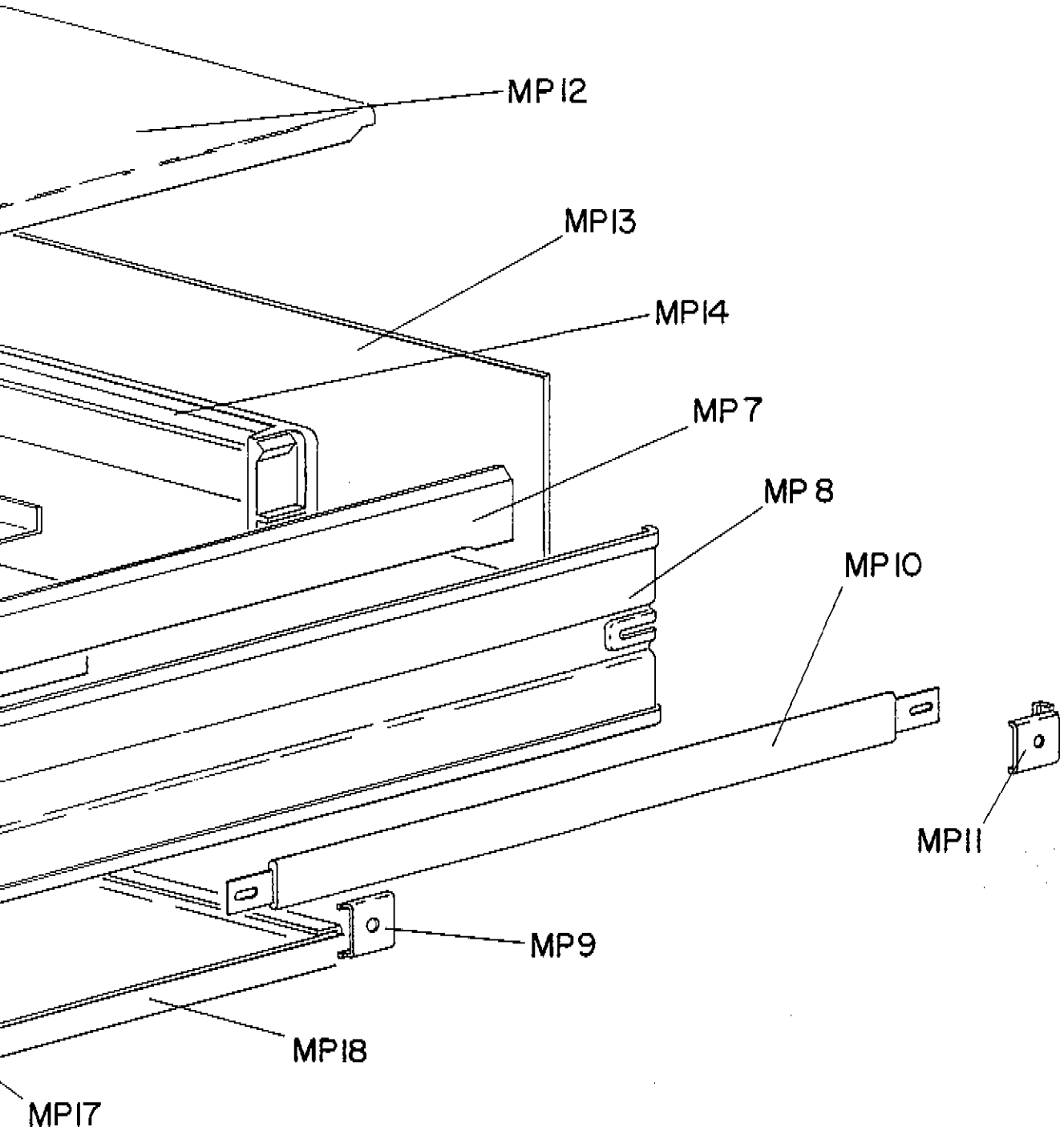

Figure 6-1. Location of Parts.

SECTION VII
MANUAL BACKDATING

7-1. Introduction.

7-2. The contents of this manual apply to all instruments. Earlier versions of this instrument, however, differ in design and appearance from those currently being produced. The information in this section documents the earlier instrument configurations and associated servicing procedures. Also included is information on recommended modifications for improvements to earlier instruments.

The following backdating information is organized by service group with all applicable information placed together for easy reference. Refer to Table 7-1 for a listing of the 3325A PC assemblies and their current (May 1984) revision.

7-3. Format.

7-4. Design, component, and documentation changes to this instrument are identified by a Δ symbol. The numbered delta in the text or on a schematic corresponds to the numbered delta shown in the heading that precedes the backdating information for that particular service group. When a delta symbol is encountered, the technician should first refer to the corresponding service group in this section. Once there, locate the page number where the delta symbol was found and determine if the change applies by checking the instrument's serial number against the range given.

7-5. Change Sheets and Service Notes.

7-6. As HP continues to improve the performance of the 3325A, corrections and modifications to the manual may be required. These changes are documented in a yellow "MANUAL CHANGES" supplement. In order to keep the manual up to date, one should periodically request the most recent supplement which is available from the nearest HP Sales and Service Office.

7-7. The instrument related service note is a publication directed toward qualified service personnel and is available to all HP Service Centers and customers. The service note conveys service-related information that is intended to increase the reliability, improve the performance, and extend the usefulness of your HP instrument. Copies of available service notes can be obtained from your nearest HP Sales and Service Office listed at the back of this manual.

Table 7-1. 3325A Circuit Boards Revisions.

Assembly	Reference Designator	Service Group(s)	Revision
03325-66502	A2	O	F
03325-66503	A3	D,G,H	C
03325-66505	A5	A	C
03325-66506	A6	B,C	C
03325-66508 *	A8	M	A
03325-66509 *	A9	M	A
03325-66514 **	A14	I,J,K,L,N	C
03325-66521 ***	A21	D,E,F	C
03325-66523 ****	A23	L	B

* 03325-66508 is the High Voltage Output Option (Opt. 002)

* 03325-66509 is the High Stability Frequency Reference Option (Opt. 001)

** In 3325A's with serial number 1748A01900 or below, the part number for this assembly was 03325-66504 (A4).

*** In 3325A's with serial number 1748A02475 or below, the part number for this assembly was 03325-66501 (A1).

**** In 3325A's with serial number 1748A00700 or below, the part number for this assembly was 03325-66507 (A7).

7-8. Backdating Information.

7-9. Service Group A - Keyboard and Display (03325-66505) Δ1.

7-10. **A5 - Past to Present.** Table 7-2 briefly summarizes the engineering effort that has brought A5 to its current revision.

Table 7-2. A5 Board Revisions.

Board Revision	Instruments Shipped With This Revision*	Board Changes
A5 - Rev A	1748A00101 - 1748A02911	—
- Rev B	1748A02912 - 1748A03725	went Rev B when board was modified to simplify manuf. procedure. No circuit or layout changes.
- Rev C	1748A03726 - Present	went Rev C when PC traces were moved. No circuit or comp. layout changes.

* Note that all serial number ranges are approximate.

7-11. All A5 board revisions are identical in design and component layout.

7-12. Service Group B - HP-IB Circuits (P/O 03325-66506) Δ2.

7-13. **A6 - Past to Present.** Table 7-3 briefly summarizes the engineering effort that has brought A6 to its current revision.

Table 7-3. A6 Board Revisions.

Board Revision	Instruments Shipped With This Revision*	Board Changes
A6 - Rev A	1748A00101 - 1748A00130	—
- Rev B	1748A00131 - 1748A00230	went Rev B when test points were added.
- Rev C	1748A00231 - Present	went Rev C when design changes were made to improve μP interrupt ckty. See Service Group C.
* Note that all serial number ranges are approximate.		

7-14. There have been no design or component layout changes to the HP-IB section of the A6 assembly.

If the A6 assembly (03325-66506) is replaced in instruments with serial number 1748A04250 or below, there may be a compatibility problem between the older cables used in the instrument and the connectors on the new board. Refer to paragraph 8-113 in Section VIII if replacement of A6 is necessary.

7-15. Service Group C - Control Circuits (P/O 03325-66506) Δ2.

7-16. **A6 - Past to Present.** Table 7-4 briefly summarizes the engineering effort that has brought A6 to its current revision.

Table 7-4. A6 Board Revisions.

Board Revision	Instruments Shipped With This Revision*	Board Changes
A6 - Rev A	1748A00101 - 1748A00130	—
- Rev B	1748A00131 - 1748A00230	went Rev B when test points were added.
- Rev C	1748A00231 - Present	went Rev C when design changes were made to improve μP interrupt ckty.
* Note that all serial number ranges are approximate.		

7-17. The following backdating information pertains to the Control Circuits portion of the A6 assembly.

Δ2 - Page 8-C-37, Figure 8-36.

Affected instruments: serial numbers 1748A00230 and below.

The above range of instruments do not have R2 (7.5kΩ p/n 0683-7525), CR2 (p/n 1901-0040), or C7 (0.01μF p/n 0160-3847). These instruments also contain the following processor interrupt circuitry involving U42 and U34.

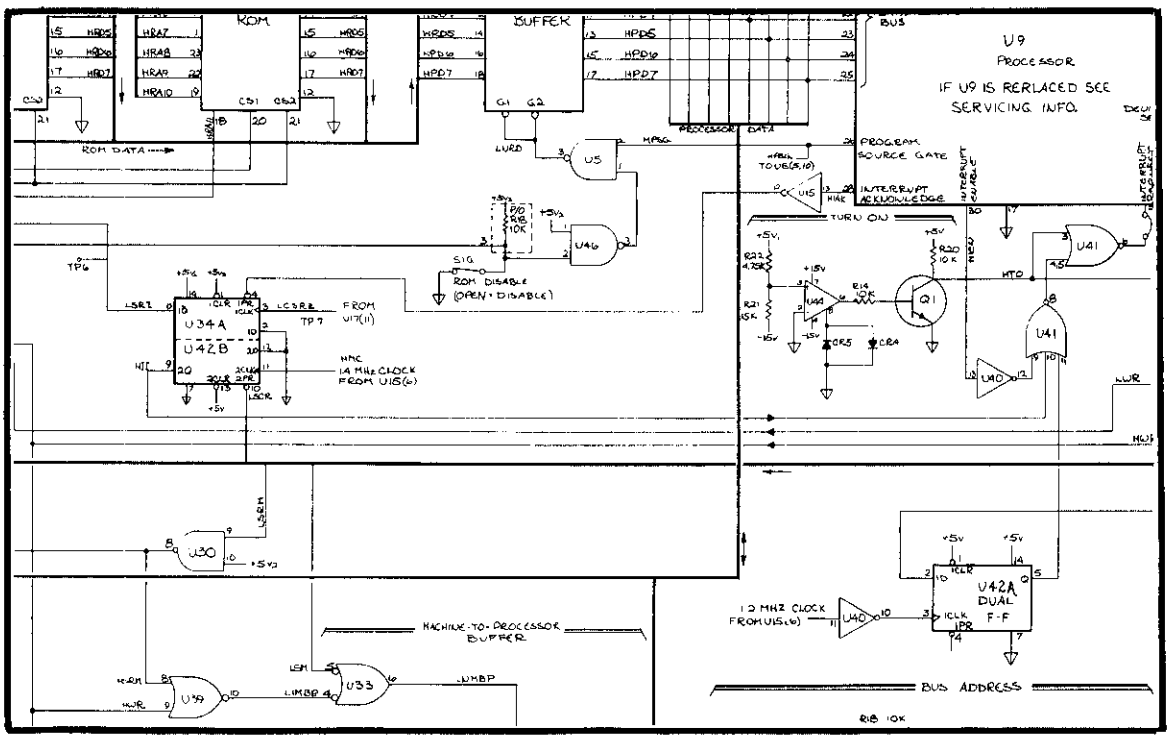

Figure 7-1. Processor Interrupt Circuitry (Serial Numbers 1748A00230 and Below*).

* All part numbers remain the same.

Δ2 Page 8-C-37, Figure 8-36.

Affected instruments: serial numbers 1748A02600 and below.

The above range of instruments contain resistors R11 and R12 (p/n 0683-1825). See Figure 7-2 for schematic and board location.

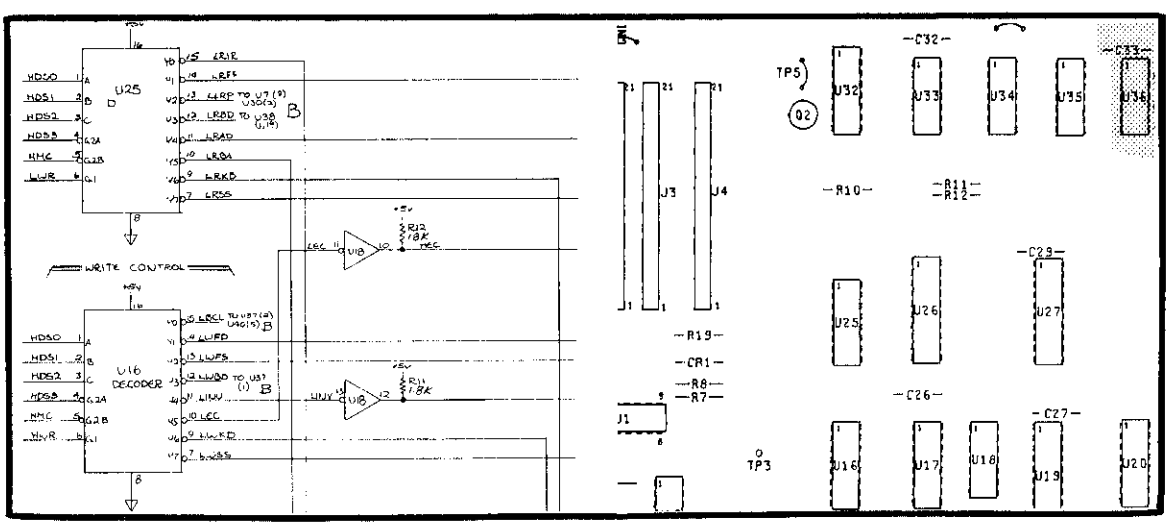

Figure 7-2. Schematic and Board Location of R11 and R12 (Serial Numbers 1748A02600 and below).

Δ2 - Page 8-B-11, 8-C-37, Figure 8-32, 8-36.

Affected instruments: serial numbers 1748A04250 and below.

Instruments in the above range may have an A6 board which contains connectors J2, J3, J4, (p/n 1251-4494) for use with cables W31, W32, W33 (p/n 8120-2577). These older (black) connectors and (white) cables have been replaced on newer boards by more reliable connectors (orange - p/n 1251-6567) and cables (gray - 8120-3108). The newer connectors are incompatible with the older cables as are the newer cables incompatible with the older connectors. If the A6 board in the above instruments is replaced, the connectors on the older destination assemblies (A3, A14(4), A21(1)) will have to be changed also. See paragraph 8-113 in Section VIII for more information.

Note also that on the older A6 boards used in the above instruments, cable W36 (p/n 03325-61622) was used to carry supply current to the A14(4) board in parallel with W33. With the newer cables on the newer boards, W36 is not needed. However, if one chooses to modify the newer board to use the older (1251-4494) connectors and cables (8120-2577), W36 is required.

Δ2 - Page 8-C-37, Figure 8-36.

Affected instruments: All

Due to earlier fabrication processes, it was necessary to pad the value of A6R8 in order to set the nanoprocessor's (A6U9) backgate voltage (V_{BG}) to the voltage stamped on the processor. Briefly, processors stamped with the following voltages require the corresponding padded values for A6R8:

V_{BG}	A6R8*	-hp- Part Number
−2.0V	34.8k	0757-0123
−2.5V	26.7k	0698-4488
−3.0V	21.5k	0757-0199
−3.5V	17.4k	0698-4482
−4.0V	14.7k	0698-3156
−4.5V	12.7k	0698-3359
−5.0V	9.53k	0698-4020

Note that the nanoprocessor's fabrication process has been controlled to the extent that V_{BG} on all processors is now −5.0V. Therefore, if A6U9 is replaced (p/n 1820-1691), insure that A6R8 is 9.53kΩ.

7-18. Service Group D - Voltage Controlled Oscillator Shield (P/O 03325-66521) Δ3.

7-19. **A21 - Past to Present.** Table 7-5 summarizes the engineering changes that have brought A21 to its current revision.

Table 7-5. A21(A1) Board Revisions.

Board Revision	Instruments Shipped With This Revision*	Board Changes
A1 - Rev A	1748A00101 - 1748A00230	–
- Rev B	1748A00231 - 1748A02475	went Rev B when U25 and assoc. ckty were added to reclock HINV to the Frac. N IC. See Svc. Grp. E.
A21 - Rev A	1748A02476 - 1748A02600	went A21 Rev A following redesign and layout of the VCO, plus mod. to the S/H ckty. See Svc. Grps. D, E, F.
- Rev B	1748A02601 - 1748A07390	Rev B boards are identical to Rev A, with the exception of PC trace location.
- Rev C	1748A07391 - Present	went Rev C following mod. to VCO ckty. See Svc. Grp. D.
* Note that all serial number ranges are approximate.		

7-20. The following backdating information pertains to the VCO portion of the A21(A1) assembly.

Δ3 - Page 8-D-7/8-D-8, Figure 8-37.

Affected instruments: serial numbers 1748A02475 and below.

The above range of instruments contain an 03325-66501 assembly with the VCO design and layout shown in Figure 7-3. Note that in instruments with serial numbers 1748A00231 to 1748A02475, A1C177 is tied to +5V.

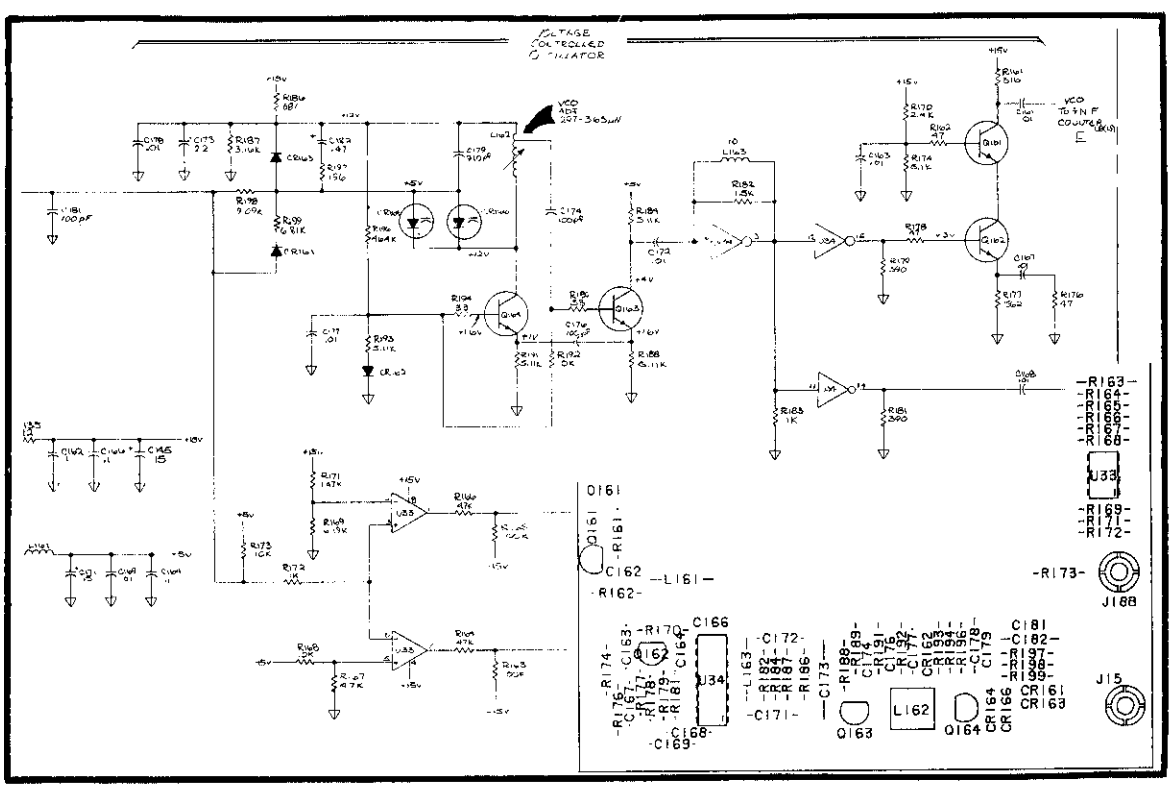

Figure 7-3. VCO Circuitry - Serial Numbers 1748A02475 And Below.

Δ3 - Page 8-D-7/8-D-8, Figure 8-37.

Affected instruments: serial numbers 1748A02476 to 1748A03225.

The preceding range of instruments contain the VCO circuitry shown in Figure 7-4, but do not have R216.

Δ3 - Page 8-D-7/8-D-8, Figure 8-37.

Affected instruments: serial numbers 1748A03226 to 1748A07390.

The preceding range of instruments contain the VCO circuitry shown in Figure 7-4.

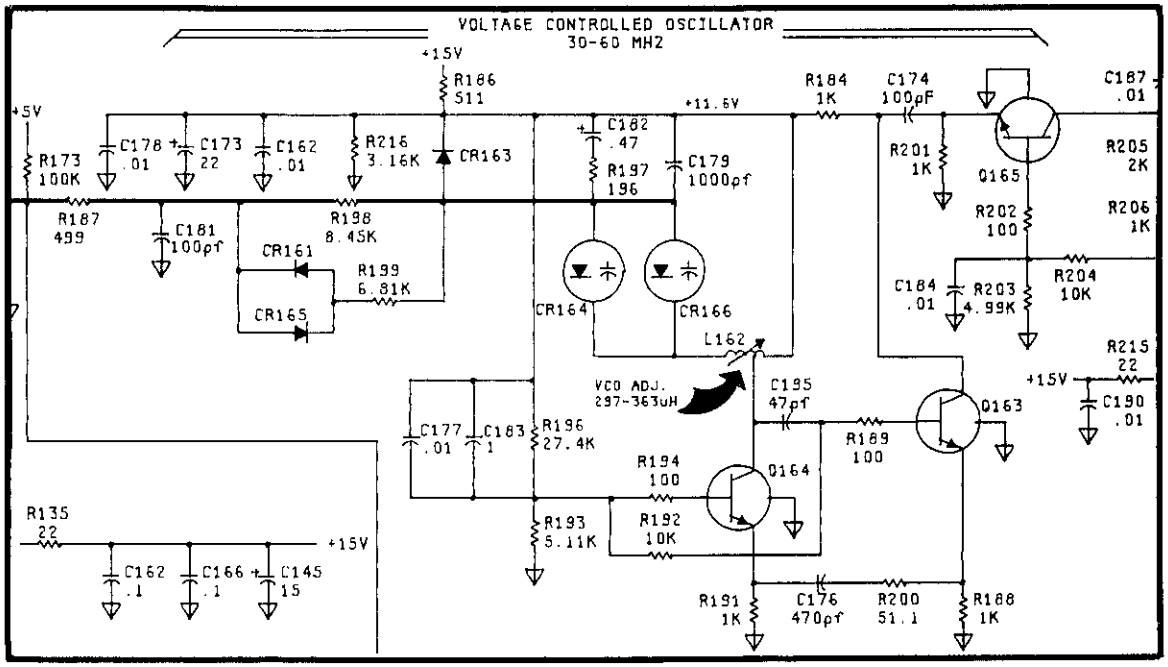

Figure 7-4. VCO Circuitry - Serial Numbers 1748A03226 to 1748A07390.

For instruments with serial numbers 1748A02476 to 1748A04675, refer to Service Note 3325A-9 if necessary for a modification procedure to prevent oscillator failures.

Δ3 - Page 8-D-7/8-D-8, Figure 8-37.

Affected instruments: serial numbers 1748A04250 and below.

Instruments in the preceding range may have an A21(A1) board which contains connector J1 (p/n 1251-4494) for use with cable W31 (p/n 8120-2577). The older (black) connector and (white) cable have been replaced on newer boards by a more reliable connector (orange - p/n 1251-6567) and cable (gray - p/n 8120-3108). The newer connectors are incompatible with the older cables as are the newer cables incompatible with the older connectors. If the A21(A1) assembly is replaced in one of the above instruments, refer to paragraph 8-113 in Section VIII for additional information on connector/cable compatibility.

7-21. Service Group E - ÷ N.F Counter (P/O 03325-66521) Δ3.

7-22. **A21 Past To Present.** Table 7-6 summarizes the engineering changes that have brought A21 to its current revision.

Table 7-6. A21(A1) Board Revisions.

Board Revision	Instruments Shipped With This Revision*	Board Changes
A1 - Rev A	1748A00101 - 1748A00230	—
- Rev B	1748A00231 - 1748A02475	went Rev B when U25 and assoc. ckty were added to reclock HINV to the Frac. N IC. See Svc. Grp. E.
A21 - Rev A	1748A02476 - 1748A02600	went A21 Rev A following redesign and layout of the VCO, plus mod. to the S/H ckty. See Svc. Grps. D, E, F.
- Rev B	1748A02601 - 1748A07390	Rev B boards are identical to Rev A, with the exception of PC trace location.
- Rev C	1748A07391 - Present	went Rev C following mod. to VCO ckty. See Svc. Grp. D.
*Note that all serial number ranges are approximate.		

7-23. The following backdating information pertains to the ÷ N.F Counter portion of the A21(A1) assembly.

Δ3 - Page 8-E-3/8-E-4, Figure 8-38.

Affected instruments: serial numbers 1748A0230 and below.

The above range of instruments contain the HINV clocking circuitry shown in Figure 7-5.

Note — the -hp- part number for U5 is 1820-1112.

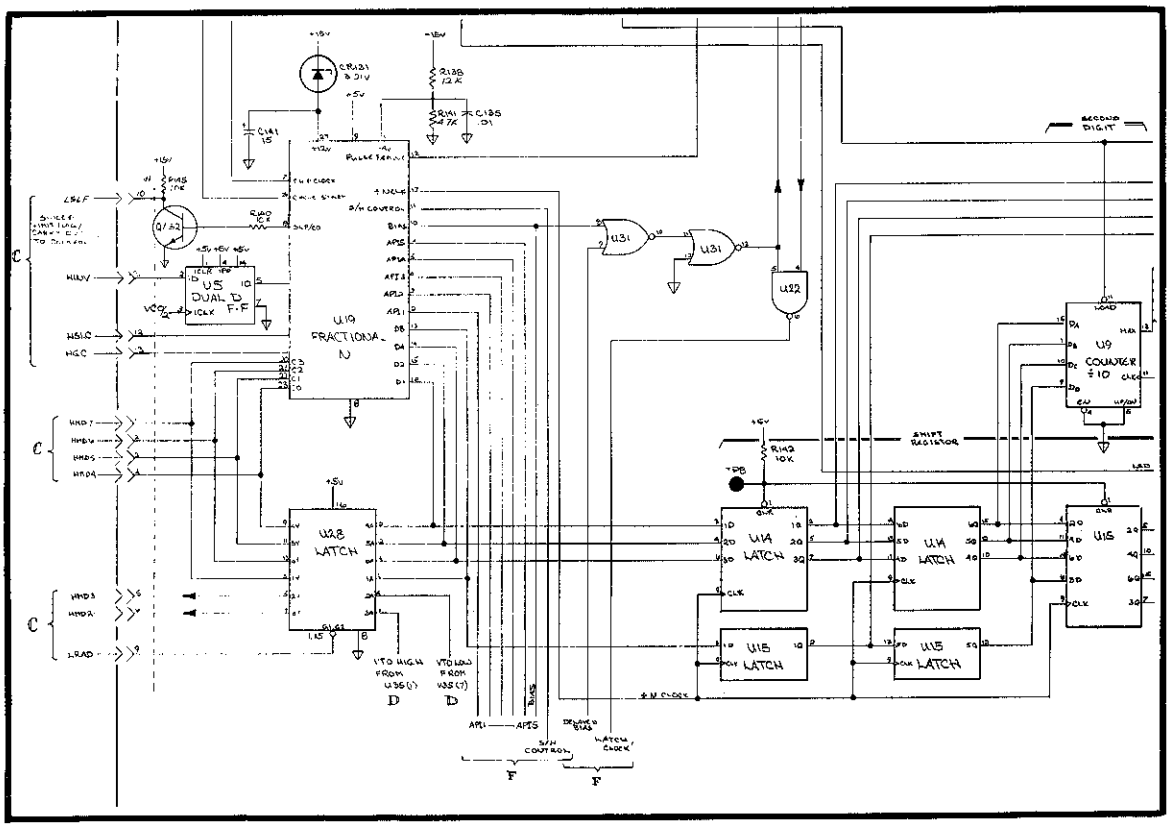

Figure 7-5. HINV Clocking Circuitry - Serial Numbers 1748A00230 And Below.

Δ3 - Page 8-E-3/8-E-4, Figure 8-38.

Affected instruments: serial numbers 1748A01200 and below.

The preceding range of instruments do not have R146.

Δ3 - Page 8-E-3/8-E-4, Figure 8-38.

Affected instruments serial numbers 1748A02475 and below.

The preceding range of instruments contain the U8 gating circuitry shown in Figure 7-6.

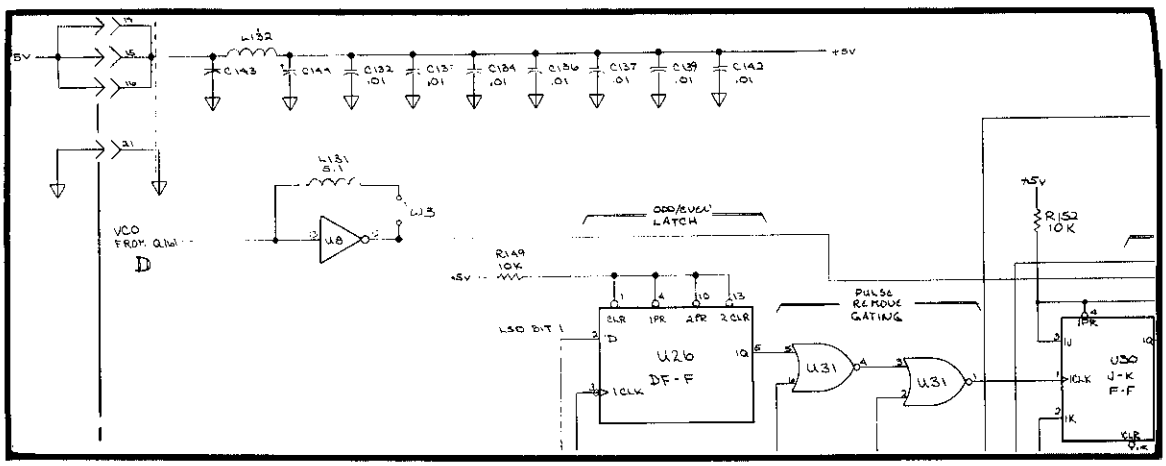

Figure 7-6. A21U8 Gating Circuitry - Serial Numbers 1748A02475 and Below.

Δ3 - Page 8-E-3/8-E-4, Figure 8-38.

Affected instruments: serial numbers 1748A02476 to 1748A07390.

The above range of instruments contain the U8 gating circuitry shown in Figure 7-7.

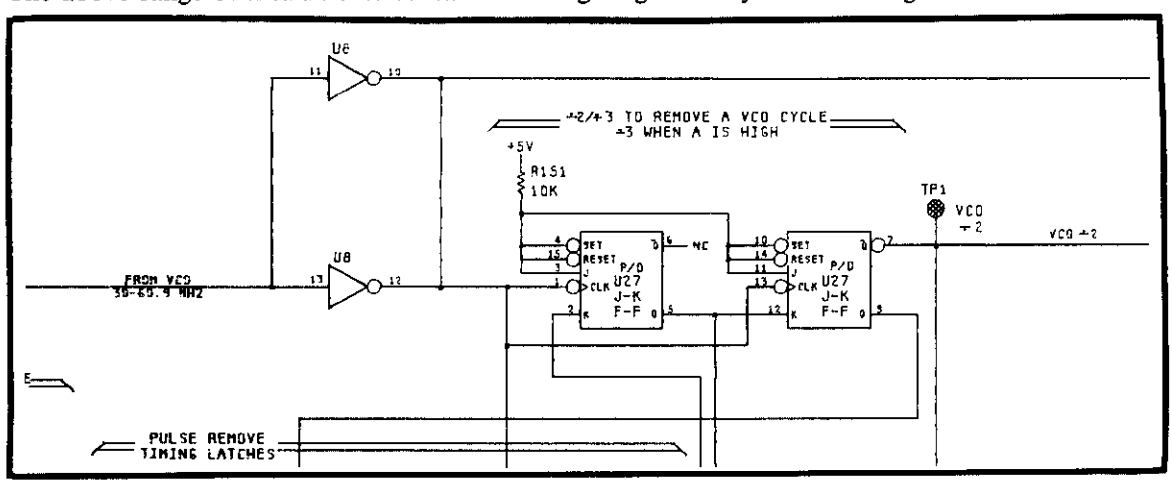

Figure 7-7. A21U8 Gating Circuitry - Serial Numbers 1748A02476 to 1748A07390.

Δ3 - Page 8-E-3/8-E-4, Figure 8-38.

Affected instruments: serial numbers 1748A04250 and below.

Instruments in the preceding range may have an A21(A1) board which contains connector J1 (p/n 1251-4494) for use with cable W31 (p/n 8120-2577). The older (black) connector and (white) cable have been replaced on newer boards by a more reliable connector (orange - p/n 1251-6567) and cable (gray - p/n 8120-3108). The newer connectors are incompatible with the older cables as are the newer cables incompatible with the older connectors. If the A21(A1) assembly is replaced in one of the above instruments, refer to paragraph 8-113 in Section VIII for additional information on connector/cable compatibility.

7-24. Service Group F - Fractional N Analog Circuits (P/O 03325-66521) Δ3.

7-25. **A21 Past To Present.** Table 7-7 summarizes the engineering changes that have brought A21 to its current revision.

Table 7-7. A21(A1) Board Revisions.

Board Revision	Instruments Shipped With This Revision*	Board Changes
A1 - Rev A	1748A00101 - 1748A00230	—
- Rev B	1748A00231 - 1748A02475	went Rev B when U25 and assoc. ckty were added to reclock HINV to the Frac. N IC. See Svc. Grp. E.
A21 - Rev A	1748A02476 - 1748A02600	went A21 Rev A following redesign and layout of the VCO, plus mod. to the S/H ckty. See Svc. Grps. D, E, F.
- Rev B	1748A02601 - 1748A07390	Rev B boards are identical to Rev A, with the exception of PC trace location.
- Rev C	1748A07391 - Present	went Rev C following mod. to VCO ckty. See Svc. Grp. D.
* Note that all serial number ranges are approximate.		

7-26. The following backdating information pertains to the Fractional N Analog Circuits portion of the A21(A1) assembly.

Δ3 - Page 8-F-5/8-F-6, Figure 8-39.

Affected instruments: serial numbers 1748A02475 and below.

This range of instruments contain the integrator and phase modulation circuitry shown in Figure 7-8.

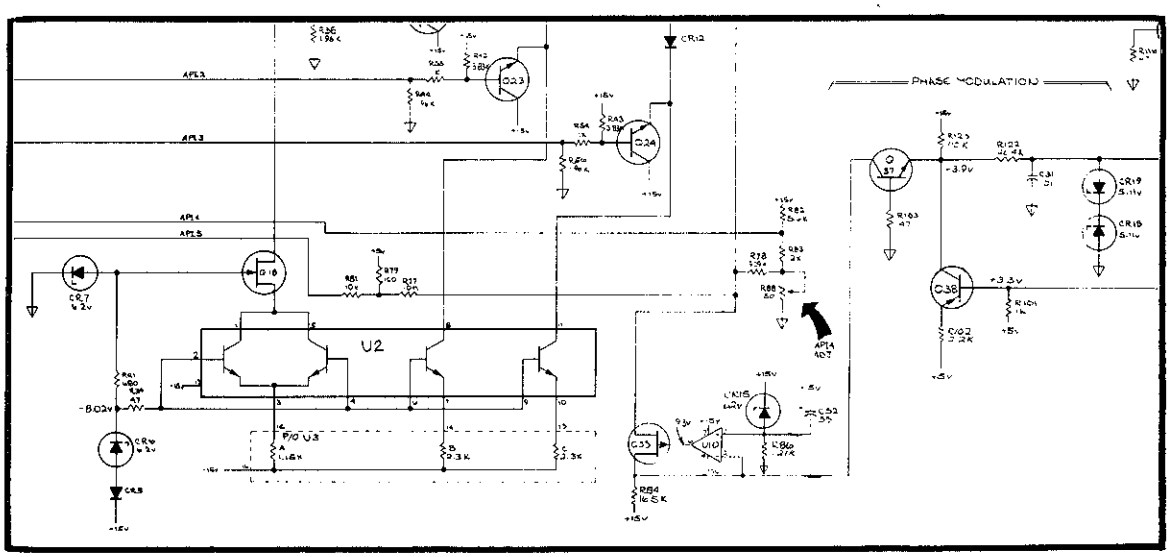

Figure 7-8. Integrator and Phase Modulation Circuitry - Serial Numbers 1748A02475 and Below.

This same range of instruments contain the Sample/Hold circuitry shown in Figure 7-9.

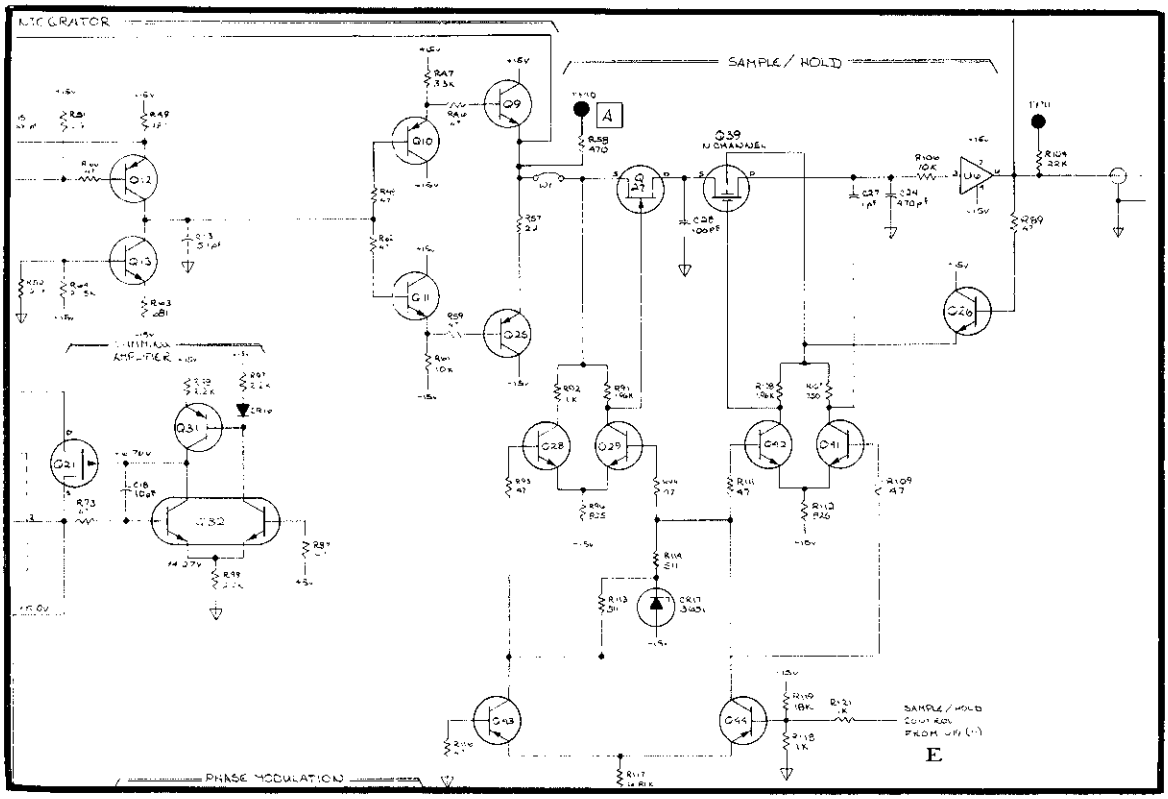

Figure 7-9. Sample/Hold Circuitry (Serial Numbers 1748A02475 and Below).

In the Sample/Hold Circuitry of Figure 7-9, R107 may be one of the following padded values:

750Ω 0757-0420
374Ω 0698-4452
1330Ω 0757-0317
2000Ω 0757-0283

Δ3 - Page 8-F-5/8-F-6, Figure 8-39.

Affected instruments: serial numbers 1748A02850 and Below.

These instruments do not have C33. C33 was added to reduce Fractional N spurs at 20MHz.

Δ3 - Page 8-F-5/8-F-6, Figure 8-39.

Affected instruments: serial numbers 1748A02476 to 1748A07390.

These instruments contain the Sample/Hold circuitry shown in Figure 8-39. These instruments do not, however, have CR20.

Δ3 - Page 8-F-5/8-F-6, Figure 8-39.

Affected instruments: serial numbers 1748A04250 and below.

Instruments in this range may have an A21(A1) board which contains connector J1 (1251-4494) for use with cable W31 (p/n 8120-2577). The older (black) connector and (white) cable have been replaced on newer boards by a more reliable connector (orange - p/n 1251-6567) and cable (gray - p/n 8120-3108). The newer connectors are incompatible with the older cables as are the newer cables incompatible with the older connectors. If the A21(A1) assembly is replaced in one of the above instruments, refer to paragraph 8-113 in Section VIII for additional information on connector/cable compatibility.

7-27. Service Groups D and G - VCO Buffer (P/O 03325-66503), 30MHz Reference and Dividers (P/O 03325-66503) Δ4.

7-28. **A3 - Past to Present.** Table 7-8 briefly summarizes the engineering changes that have brought A3 to its current revision.

Table 7-8. A3 Board Revisions.

Board Revision	Instruments Shipped With This Revision*	Board Changes
A3 - Rev A	1748A00101 - 1748A00470	—
- Rev B	1748A00471 - 1748A04675	went Rev B with modification to 20MHz LPF. See Svc. Grp. H.
- Rev C	1748A04676 - Present	went Rev C when modifications were made to the mixer driver and multiplier ckty.
* Note that all serial number ranges are approximate.		

7-29. There is no backdating information for the A3 VCO Buffer circuitry at this time.

7-30. The following backdating information pertains to the 30MHz reference and divider portion of the A3 assembly.

Δ4 - Page 8-G-3/8-G-4, Figure 8-40.

Affected instruments: serial numbers 1748A00620 and below.

The preceding range of instruments contain the biasing circuitry for U14 shown in Figure 7-10. Components unique to this design include:

A3R71 10kΩ p/n 0683-1035 A3R74 10kΩ p/n 0683-1035 A3R89 4.7kΩ p/n 0683-4725

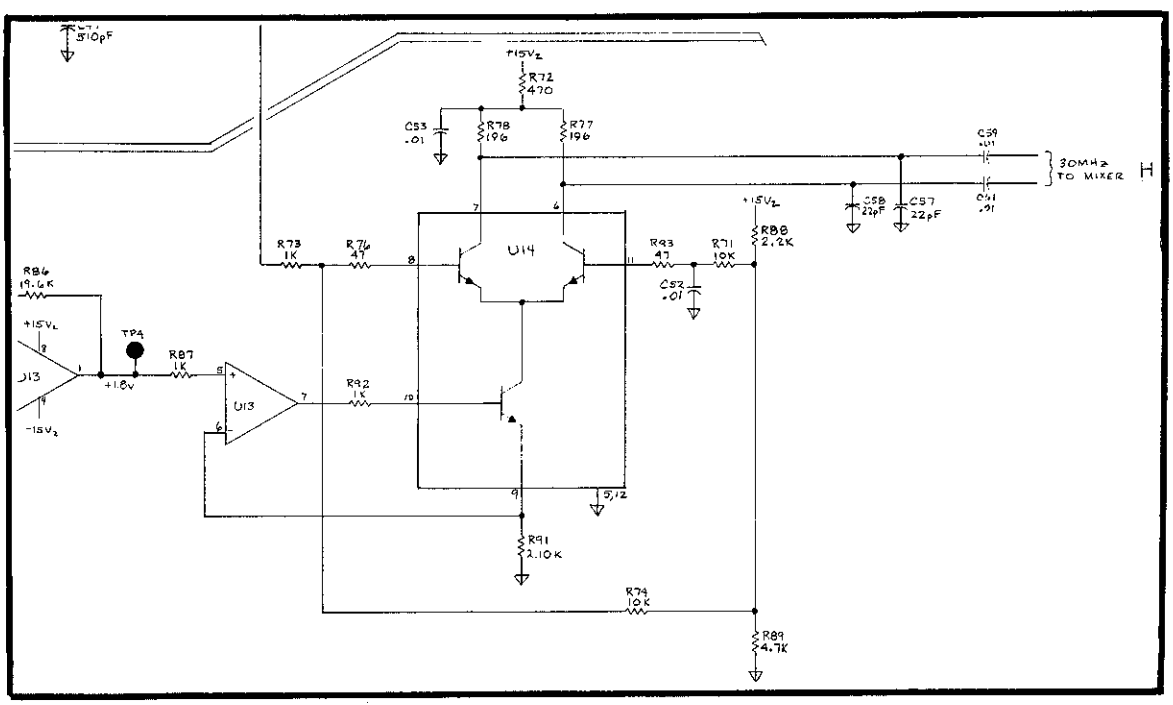

Figure 7-10. U14 Biasing Circuitry (Serial Numbers 1748A00620 and Below).

Δ4 - Page 8-G-3/8-G-4, Figure 8-40.

Affected instruments: serial numbers 1748A02600 and below.

The preceding instruments do not have C20.

Δ4 - Page 8-G-3/8-G-4, Figure 8-40.

Affected instruments: serial numbers 1748A04675 and below.

The preceding range of instruments contain the sine amplitude control and amplitude modulation circuitry shown in Figure 7-11. These instruments also do not have A3R85 or A3R90 (see Figure 8-40).

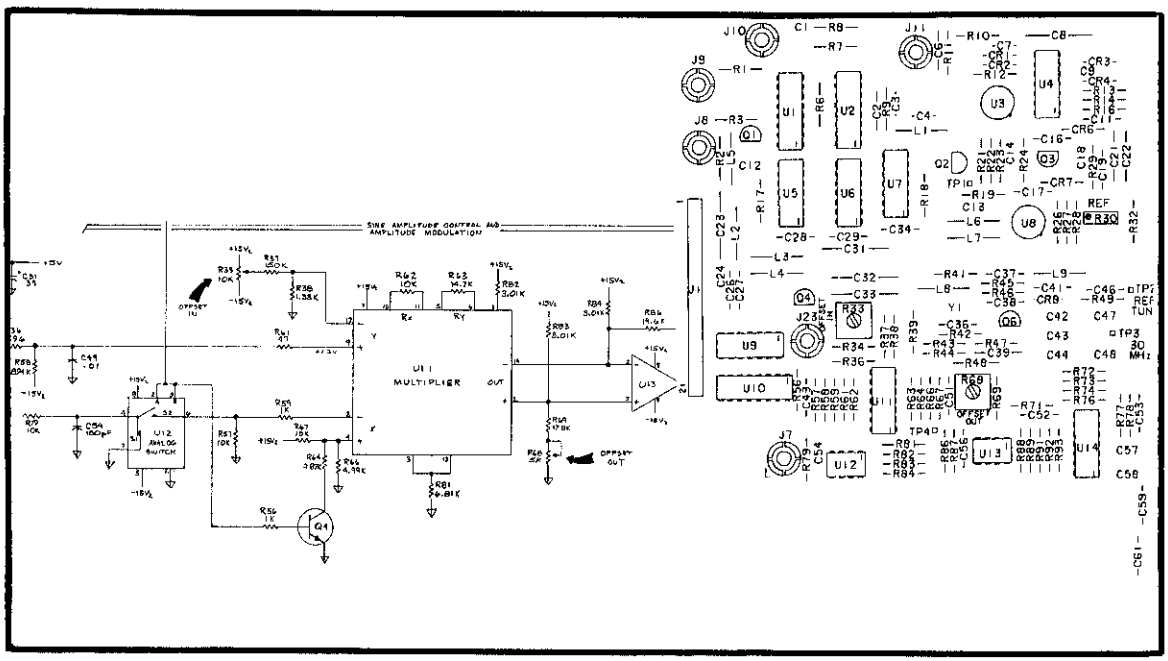

Figure 7-11. Sine Amplitude Control and Amplitude Modulation Circuitry (Serial Numbers 1748A04675 and Below).

Δ4 - Page 5-3, paragraph 5-13.

Affected instruments: serial numbers 1748A04675 and below.

For these instruments, the following Amplitude Calibration adjustment procedure should be used.

Equipment Required:

Oscilloscope (-hp- Model 1740A)
10:1 Oscilloscope Probe (-hp- Model 10041A)
DC Power Supply (-hp- Model 6214A)
Oscillator (-hp- Model 204C)
AC Digital Voltmeter (-hp- Model 3466A)

a. Set the 3325A as follows:

Function ..... Sine
Frequency 1kHz
Amplitude 1Vp-p
DC Offset 1mV
Amplitude Modulation ..... On

b. Disconnect cable W7 from A3J7.

CAUTION

Do not allow disconnected cable connectors to contact the printed circuit board or components, or circuits may be damaged.

c. Adjust the dc power supply output to approximately +3V and connect between the center contact of A3J7 and ground.

d. Disconnect cable W23 from A3J23.

e. Measure the oscillator (-hp- 204C) output with the ac digital voltmeter and adjust the output level to approximately 1Vrms at a frequency of 1kHz. Connect the oscillator output between the center contact of A3J23 and ground.

f. Connect the oscilloscope through a 10:1 probe to A3TP4. Set the oscilloscope input to ac coupled, sweep to 1ms/div.

g. Adjust the dc power supply output voltage to null out the sine wave signal on the display. (Change the oscilloscope vertical gain as necessary to observe the signal.)

h. Ground the oscilloscope input and zero the trace on the center line. Set the input to dc coupled.

i. Adjust Offset Out (A3R68) to return the oscilloscope trace to the center line (0Vdc).

j. Disconnect the dc power supply and the oscillator and reconnect cables W7 and W23.

k. Set 3325A amplitude modulation off.

l. Connect an ac digital voltmeter to the 3325A signal output.

m. Press the AMPTD CAL key.

n. Adjust Offset In (A3R33) for a voltmeter reading of 0.707Vrms.

o. Repeat steps m and n until the output voltage of 0.707Vrms does not change when the AMPTD CAL key is pressed.

Δ4 - Page 8-G-3/8-G-4, Figure 8-40.

Affected instruments: serial numbers 1748A04250 and below.

Instruments in the preceding range may have an A3 assembly which contains connector J1 (p/n 1251-4494) for use with cable W33 (p/n 8120-2577). The older (black) connector and (white) cable have been replaced on newer boards by a more reliable connector (orange - p/n 1251-6567) and cable (gray - p/n 8120-3108). The newer connectors are incompatible with the older cables as are the newer cables incompatible with the older connectors. If the A3 assembly is replaced in one of the above instruments, refer to paragraph 8-113 in Section VIII for additional information on connector/cable compatibility.

7-31. Service Group H - Mixer (P/O 03325-66503) Δ4.

7-32. **A3 - Past to Present.** Table 7-9 briefly summarizes the engineering changes that have brought A3 to it current revision.

Table 7-9. A3 Board Revisions.

Board Revision	Instruments Shipped With This Revision*	Board Changes
A3 - Rev A	1748A00101 - 1748A00470	—
- Rev B	1748A00471 - 1748A04675	went Rev B with modification to 20MHz LPF.
- Rev C	1748A04676 - Present	went Rev C when modifications were made to the mixer driver and multiplier ckty.

* Note that all serial number ranges are approximate.

7-33. The following backdating information pertains to the mixer portion of the A3 assembly.

Δ4 - Page 8-H-3/8-H-4, Figure 8-41.

Affected instruments: serial numbers 1748A00470 and below.

Instruments in this range do not have A3R126 or A3C120.

Δ4 - Page 8-H-3/8-H-4, Figure 8-41.

Affected instruments: serial numbers 1748A04675 and below.

These instruments contain the mixer driver circuitry shown in Figure 7-12. Note that the part number for A3U16 in this earlier design was 1858-0015.

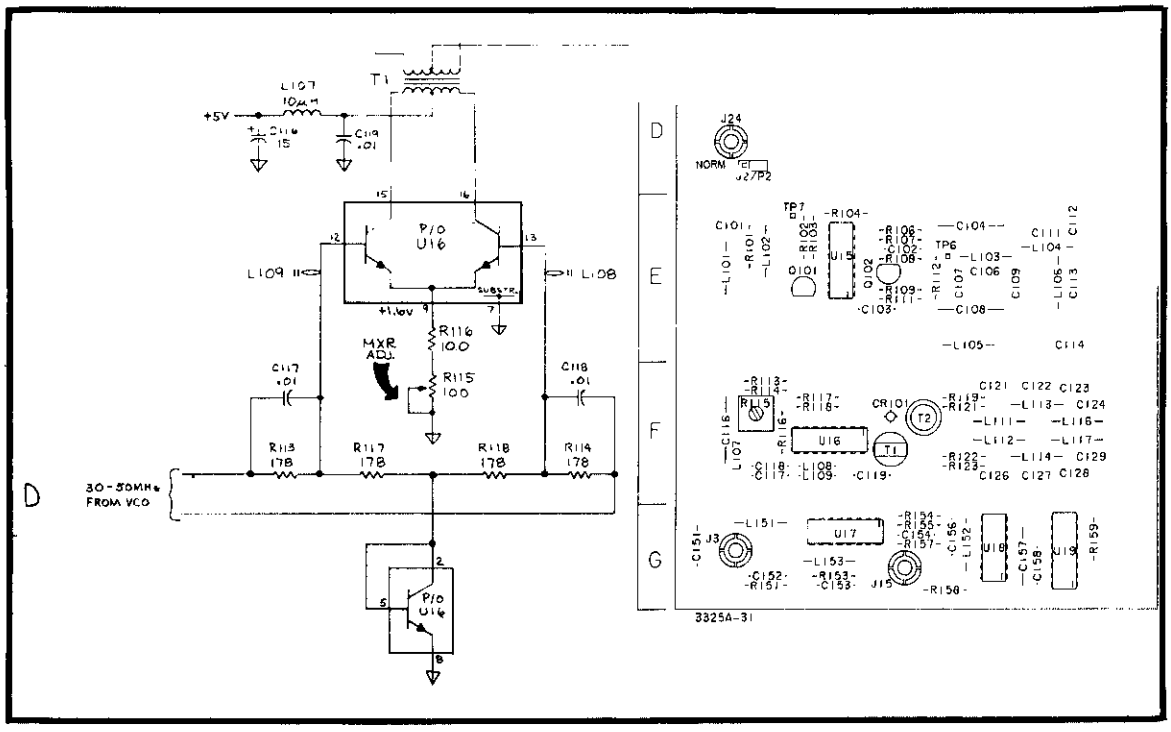

Figure 7-12. Mixer Driver Circuitry (Serial Numbers 1748A04675 and Below).

If reliability problems with U16 are encountered in these earlier instruments, refer to Service Note 3325A-7. This service note describes a check of the mixer driver current and subsequent adjustment to reduce the current, thereby improving U16's reliability. Note that the performance test steps and adjustments referred to in this service note may not correspond directly with the steps currently found in Sections IV and V.

If status byte problems are encountered in instruments with serial number 1748A01300 and below, change C8 to a 22μF capacitor (p/n 0180-0228).

7-34. Service Group I - D/A Converter And Sample/Hold (P/O 03325-66514) Δ5.

7-35. **A14 - Past To Present.** Table 7-10 briefly summarizes the engineering and manufacturing changes that have brought A14(A4) to its current revision.

Table 7-10. A14(A4) Board Revisions.

Board Revision	Instruments Shipped With This Revision*	Board Changes
A4 - Rev B**	1748A00101 - 1748A00190	—
- Rev C	1748A00191 - 1748A00470	went Rev C following PC trace and manu. mods.
- Rev D	1748A00471 - 1748A01075	went Rev D following manu. changes and the addition of CR108, CR109, and R55.
- Rev E	1748A01076 - 1748A01900	went Rev E following mods. to the relay driver and dc offset control portion of A4.
A14 - Rev A	1748A01901 - 1748A08790	went A14 Rev A when output amp (Svc. Grp. K) was re-designed. R142 was also added.
- Rev B	1748A08791 - 1748A14537	went A14 Rev B with changes to dc offset and amptd. control circuitry.
- Rev C	1748A14538 - Present	went A14 Rev C following PC trace mod. to level comp. (U42) ckty.

* Note that all serial number ranges are approximate.

** No A4 Rev A boards were ever produced.

7-36. The following backdating information pertains to the DAC and Sample/Hold portion of A14(A4).

Δ5 - Page 8-I-5/8-I-6, Figure 8-42.

Affected instruments: serial numbers 1748A00150 and below.

These instruments do not have CR108.

Affected instruments: serial numbers 1748A00470 and below.

Instruments in this serial number range do not have CR109 or R55.

Δ5 - Page 8-I-5/8-I-6, Figure 8-42.

Affected instruments: serial numbers 1748A01900 and below.

For instruments in this serial number range, R40 is 20kΩ p/n 2100-0558.

Affected instruments: serial numbers 1748A04250 and below.

Instruments in this range may contain an A14(A4) board which contains connector J1 (p/n 1251-4494) for use with cable W32 (p/n 8120-2577). The older (black) connector and (white) cable have been replaced on newer boards by a more reliable connector (orange - p/n 1251-6567) and cable (gray - p/n 8120-3108). The newer connectors are incompatible with the older cables as are the newer cables incompatible with the older connectors. If the A14(A4) assembly is replaced in one of the above instruments, refer to paragraph 8-113 in Section VIII for additional replacement information.

Note also that on the older A14(A4) boards, cable W36 was used to carry supply current from the A6 assembly to A14(A4). With the newer cables on the newer boards, W36 is not needed. However, if one chooses to modify a newer board to use the older (1251-4494) connectors and cables (8120-2577), W36 is required.

7-37. Service Group J - Function Circuits (P/O 03325-66514) Δ5.

7-38. **A14 - Past To Present.** Table 7-11 briefly summarizes the engineering and manufacturing changes that have brought A14(A4) to its current revision.

Table 7-11. A14(A4) Board Revisions.

Board Revision	Instruments Shipped With This Revision*	Board Changes
A4 - Rev B**	1748A00101 - 1748A00190	–
- Rev C	1748A00191 - 1748A00470	went Rev C following PC trace and manufacturing modifications.
- Rev D	1748A00471 - 1748A01075	went Rev D following manuf. changes and the addition of CR108, CR109, and R55.
- Rev E	1748A01076 - 1748A01900	went Rev E following mod. to the relay driver and dc offset control portion of A4.
A14 - Rev A	1748A01901 - 1748A08790	went A14 Rev A when output amp (Svc. Grp. K) was re-designed. R142 was also added.
- Rev B	1748A08791 - 1748A14537	went Rev B with changes to dc offset and amptd. control circuitry.
- Rev C	1748A14538 - Present	went Rev C following PC trace mod. to level comparator (U42) ckty.

* Note that all serial number ranges are approximate.

** No A4 Rev A boards were ever produced.

7-39. The following backdating information pertains to the function circuits portion of A14(4)

Δ5 - Page 8-J-7/8-J-8, Figure 8-43.

Affected instruments: serial numbers 1748A00190 and below.

These instruments do not have R220. R220 was added to increase the usefulness of the Amp-In test point by providing a load for current sources feeding the output amplifier. Voltages can then be measured across this resistor.

Δ5 - Page 8-J-7/8-J-8, Figure 8-43.

Affected instruments: serial numbers 1748A01075 and below.

These instruments contain the dc offset control circuitry shown in Figure 7-13.

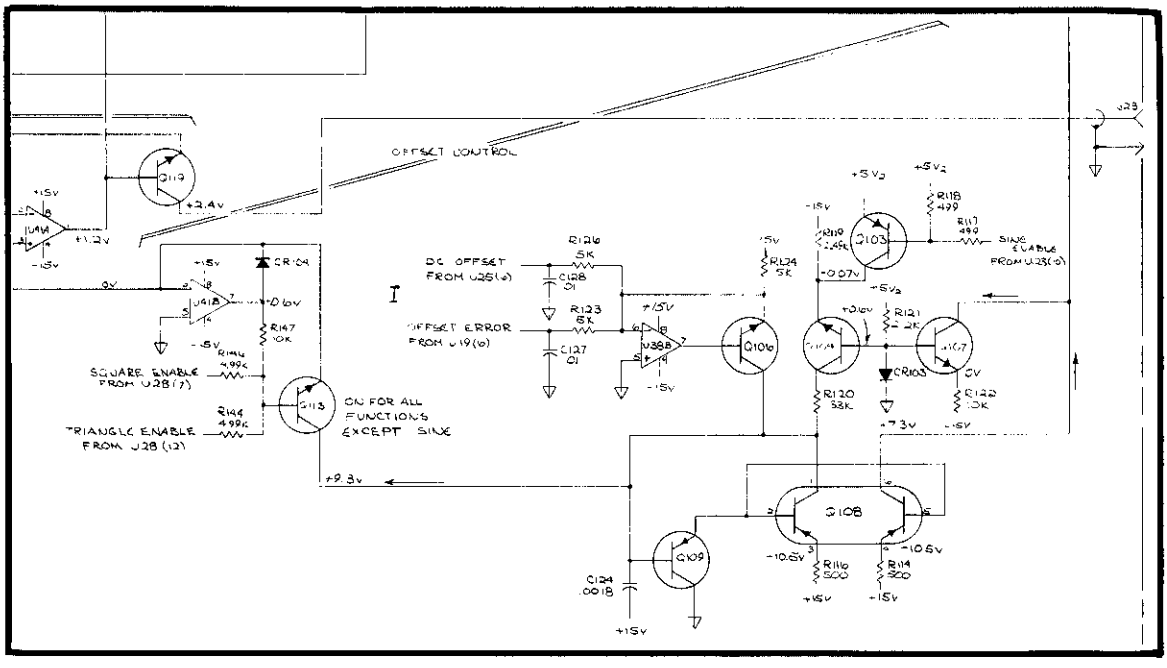

Figure 7-13. DC Offset Control (Serial Numbers 1748A01075 and Below).

Affected instruments: serial numbers 1748A08790 to 1748A01076.

These instruments contain the dc offset control circuitry shown in Figure 7-14.

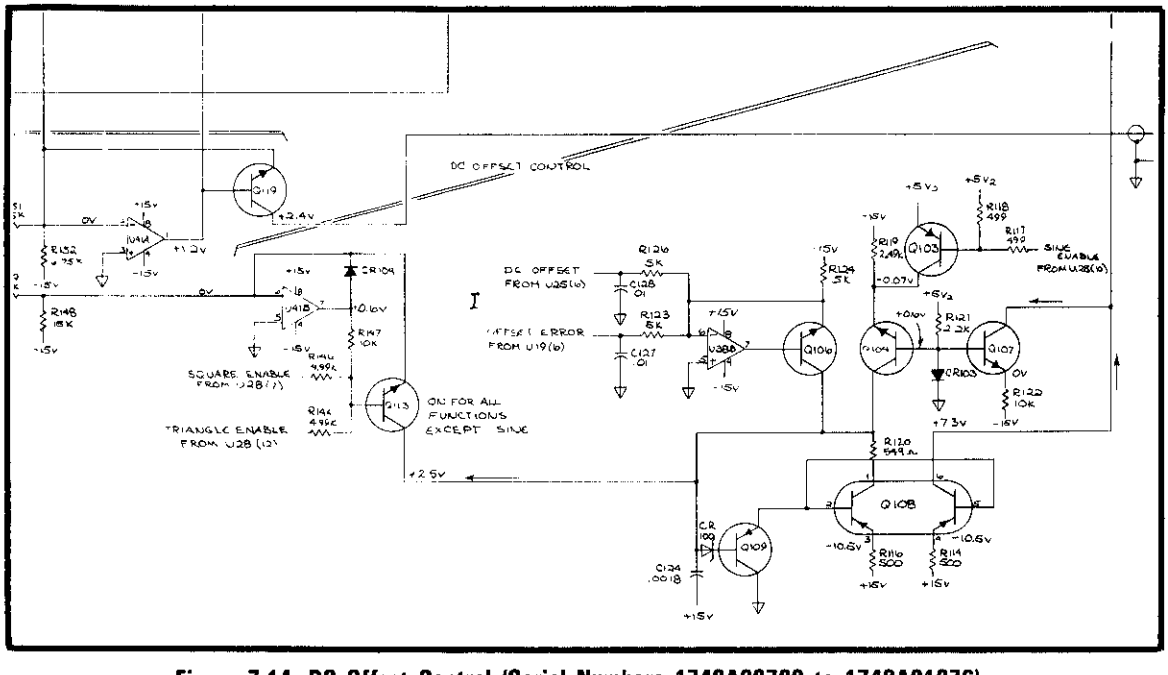

Figure 7-14. DC Offset Control (Serial Numbers 1748A08790 to 1748A01076).

Δ5 - Page 8-J-7/8-J-8, Figure 8-43.

Affected instruments: serial numbers 1748A02350 and below.

These instruments do not have CR110. See Service Note 3325A-5A for a modification procedure to improve square wave phase control in these instruments.

Fig 8-36
Sht 1 of 5

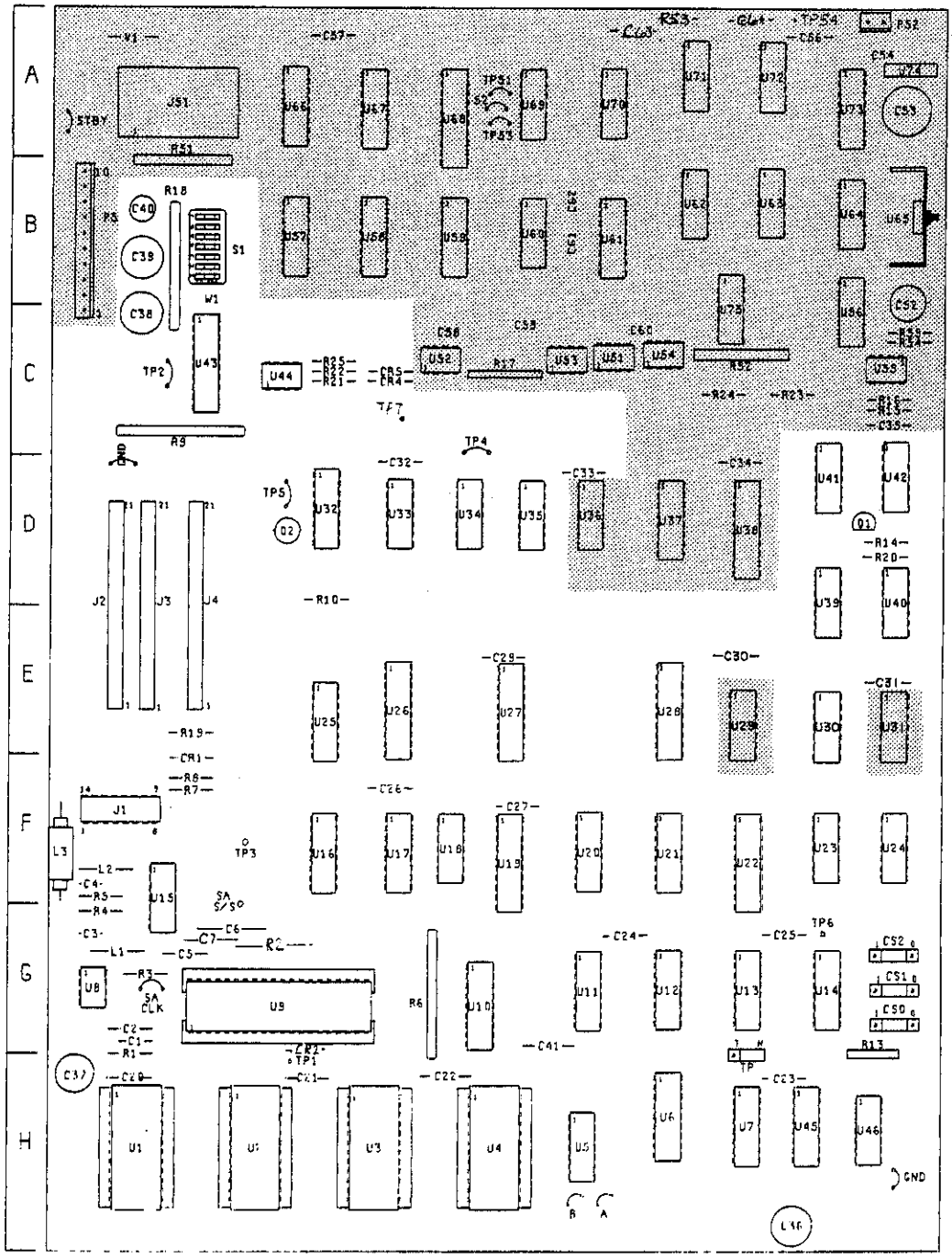

A6
03325-66506
Rev C

Note 1: Refer to paragraph 8-113 if board replacement is necessary.

Affected instruments: serial numbers 1748A05826 to 1748A08790.

These instruments contain the amplitude control circuitry shown in Figure 7-16.

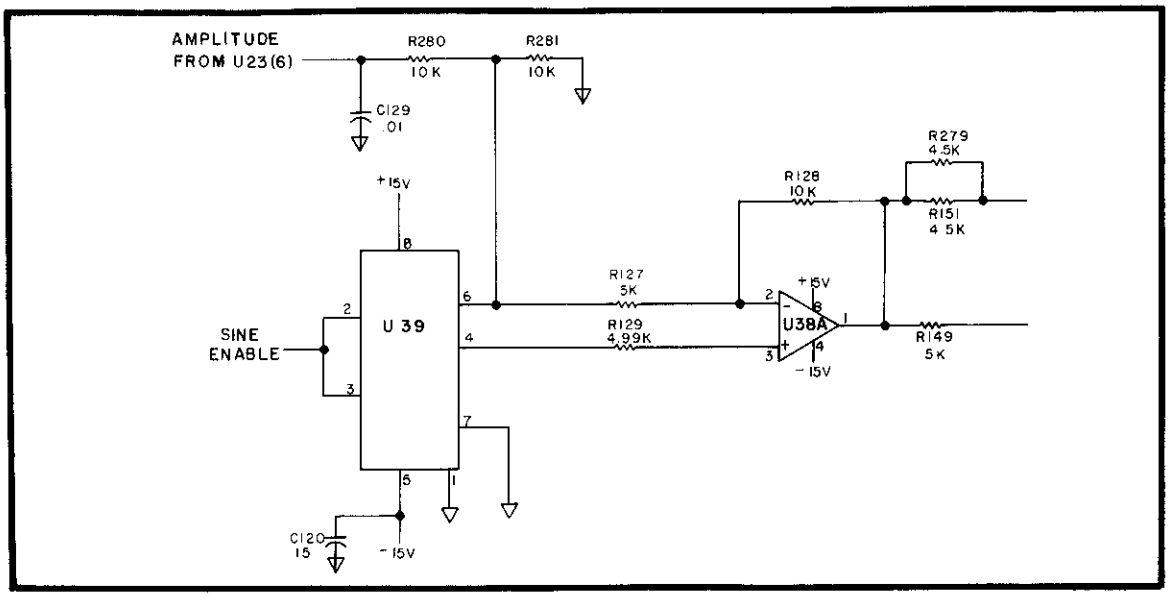

Figure 7-16. Amplitude Control Circuitry (Serial Numbers 1748A05826 to 1748A08790).

Δ5 - Page 8-J-7/8-J-8, Figure 8-43.

Affected instruments: serial numbers 1748A08790 and below.

These instruments do not have U36. In these instruments, pin 8 or 9 of U34 is connected to R101 via a jumper wire.

Δ5 - Page 8-J-7/8-J-8, Figure 8-43.

Affected instruments: serial numbers 1748A08790 and below.

Instruments in this serial number range do not have CR111 or R278.

Δ5 - Page 8-J-7/8-J-8, Figure 8-43.

Affected instruments: serial numbers 1748A04250 and below.

These instruments may have an A14(A4) board which contains connector J1 (p/n 1251-4494) for use with cable W32 (p/n 8120-2577). The older (black) connector and (white) cable have been replaced on newer boards by a more reliable connector (orange - p/n 1251-6567) and cable (gray - p/n 8120-3108). The new connectors are incompatible with the older cables as are the newer cables incompatible with the older connectors. If the A14(A4) assembly is replaced in one of the above instruments, refer to paragraph 8-113 in Section VIII for additional replacement information.

7-40. Service Group K - Output Amplifier (P/O 03325-66514) Δ5.

7-41. **A14 - Past To Present.** Table 7-12 briefly summarizes the engineering and manufacturing changes that have brought A14 to its current revision.

7-42. The following backdating information pertains to the Output Amplifier portion of A14(A4).

Δ5 - Page 8-K-5/8-K-6, Figure 8-44.

Affected instruments: serial numbers 1748A01900 and below.

These instruments contain the output amplifier design shown in Figure 7-17.

Table 7-12. A14 (A4) Board Revisions.

Board Revision	Instruments Shipped With This Revision*	Board Changes
A4 - Rev B**	1748A00101 - 1748A00190	—
- Rev C	1748A00191 - 1748A00470	went Rev C following PC trace and manufacturing modifications.
- Rev D	1748A00471 - 1748A01075	went Rev D following manuf. changes and the addition of CR108, CR109, and R55.
- Rev E	1748A01076 - 1748A01900	went Rev E following mod. to the relay driver and dc offset control portion of A4.
A14 - Rev A	1748A01901 - 1748A08790	went A14 Rev A when output amp (Svc. Grp. K) was re-designed. R142 was also added.
- Rev B	1748A08791 - 1748A14537	went Rev B with changes to dc offset and amptd. control circuitry.
- Rev C	1748A14538 - Present	went Rev C following PC trace mod. to level comparator (U42) ckty.

* Note that all serial number ranges are approximate.

** No A4 Rev A boards were ever produced.

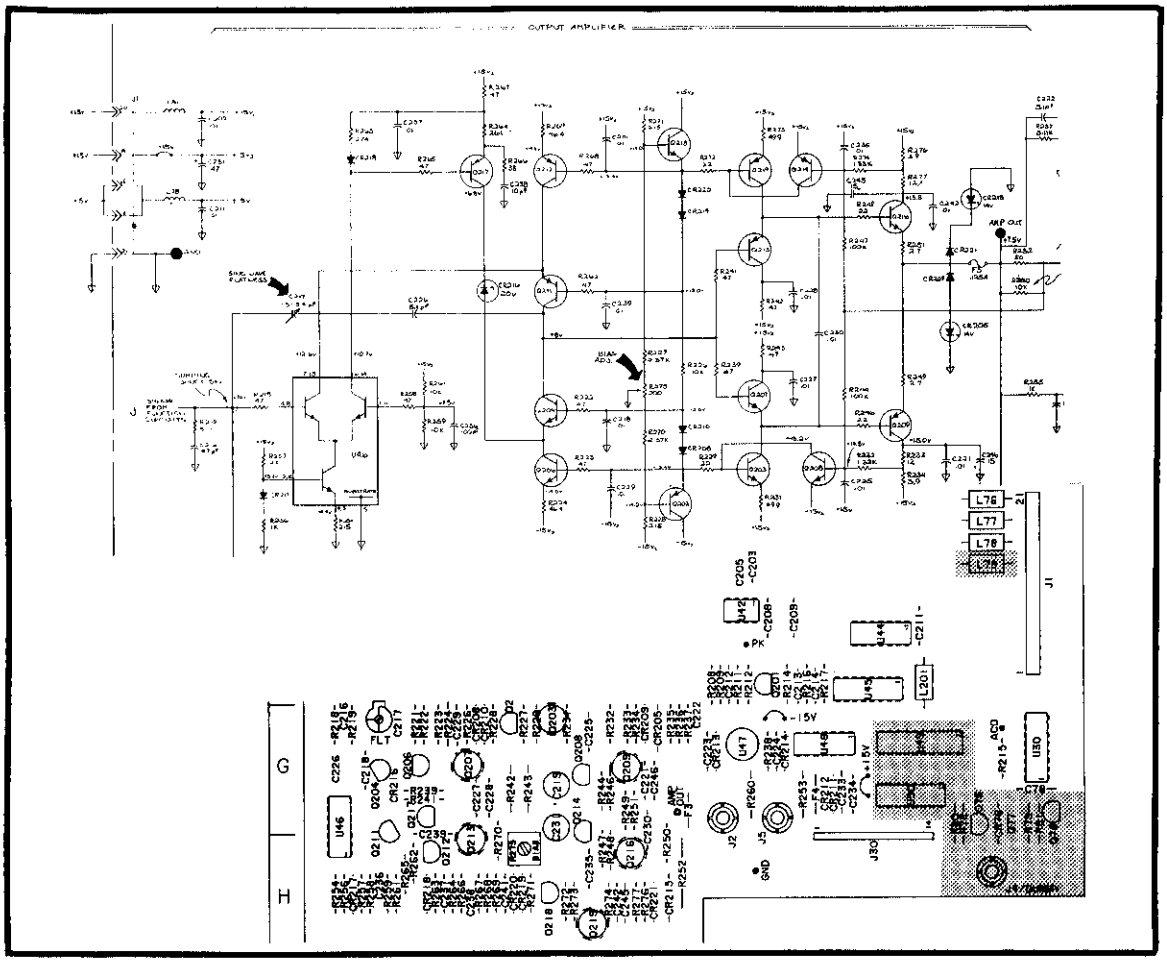

Figure 7-17. Output Amplifier (Serial Numbers 1748A01900 and below).

Affected instruments: serial numbers 1748A01900 to 1748A00190.

Refer to Figure 7-17. Instruments in this range contain diodes CR222 and CR223 connected between pins 4 and 1 of A4U46. Note that the anode end of CR223 is connected to pin 4 and the anode end of CR222 is connected to pin 1. Referring again to Figure 7-17, these instruments also contain diodes CR224 and CR225. CR224 (cathode) is connected from the base of Q211 to the collector of Q211. CR225 (anode) is connected from the base of Q204 to the collector of Q204. Modify Figure 7-17 as necessary to show these components.

Δ5 - Page 8-K-5/8-K-6, Figure 8-44.

Affected instruments: serial numbers 1748A04250 and below.

Instruments in this range may contain an A14(A4) board which has connector J1 (p/n 1251-4494) for use with cable W32 (p/n 8120-2577). The older (black) connector and (white) cable have been replaced on newer boards by a more reliable connector (orange - p/n 1251-6567) and cable (gray - p/n 8120-3108). The newer connectors are incompatible with the older cables as are the newer cables incompatible with the older connectors. If the A14(A4) assembly is replaced in one of the above instruments, refer to paragraph 8-113 in Section VIII for additional replacement information.

7-43. Service Group L - Attenuator (03325-66523) and Relay Drivers (P/O 03325-66514) Δ5, Δ6.

7-44. **A23 - Past to Present.** Table 7-13 briefly summarizes the engineering and manufacturing changes that have brought A23(A7) to its current revision. Refer to Tables 7-10, 7-11, 7-12, or 7-14 for revision information on A14(A4).

Table 7-13. A23(A7) Board Revisions.

Board Revision	Instruments Shipped With This Revision*	Board Changes
A7 - Rev A	1748A00101 - 1748A00540	—
A23 - Rev A	1748A00541 - 1748A00950	went A23 Rev A following design changes to improve the R/F performance of the atten.
- Rev B	1748A00951 - Present	went A23 Rev B following PC trace layout modification.
* Note that all serial number ranges are approximate.		

7-45. The following backdating information pertains to the Attenuator assembly (03325-66523(07)).

Δ6 - Page 8-L-3/8-L-4, Figure 8-45.

Affected instruments: serial numbers 1748A00540 and below.

Instruments in this serial number range do not have C15, C16, or C17.

Δ6 - Page 8-L-3/8-L-4, Figure 8-45.

Affected instruments: serial numbers 1748A04400 and below.

Instruments in this serial number range have an A23(A7) assembly which contains connector J30 (p/n 1251-4390) for use with cable W30 (p/n 8120-2576). The older (black) connector and (white) cable have been replaced on newer boards by a more reliable connector (orange - p/n 1251-5064) and cable (gray - p/n 8120-3216). The newer connector is incompatible with the older cable, as is the newer cable incompatible with the older connector. If the A23(A7) assembly is replaced in one of the above instruments, refer to paragraph 8-113 in Section VIII. Note that similar connector/cable changes have been made to other assemblies beginning with serial number 1748A04250.

7-46. The following backdating information pertains to the relay driver portion of A14(A4).

Δ5 - Page 8-L-3/8-L-4, Figure 8-45.

Affected instruments: serial numbers 1748A01075 and below.

Instruments in this serial number range contain the relay drive circuitry shown in Figure 7-18. Note that serial numbers 1748A01075 to 1748A00231 have a capacitor (C265 10μF p/n 0180-0374) shunting R80.

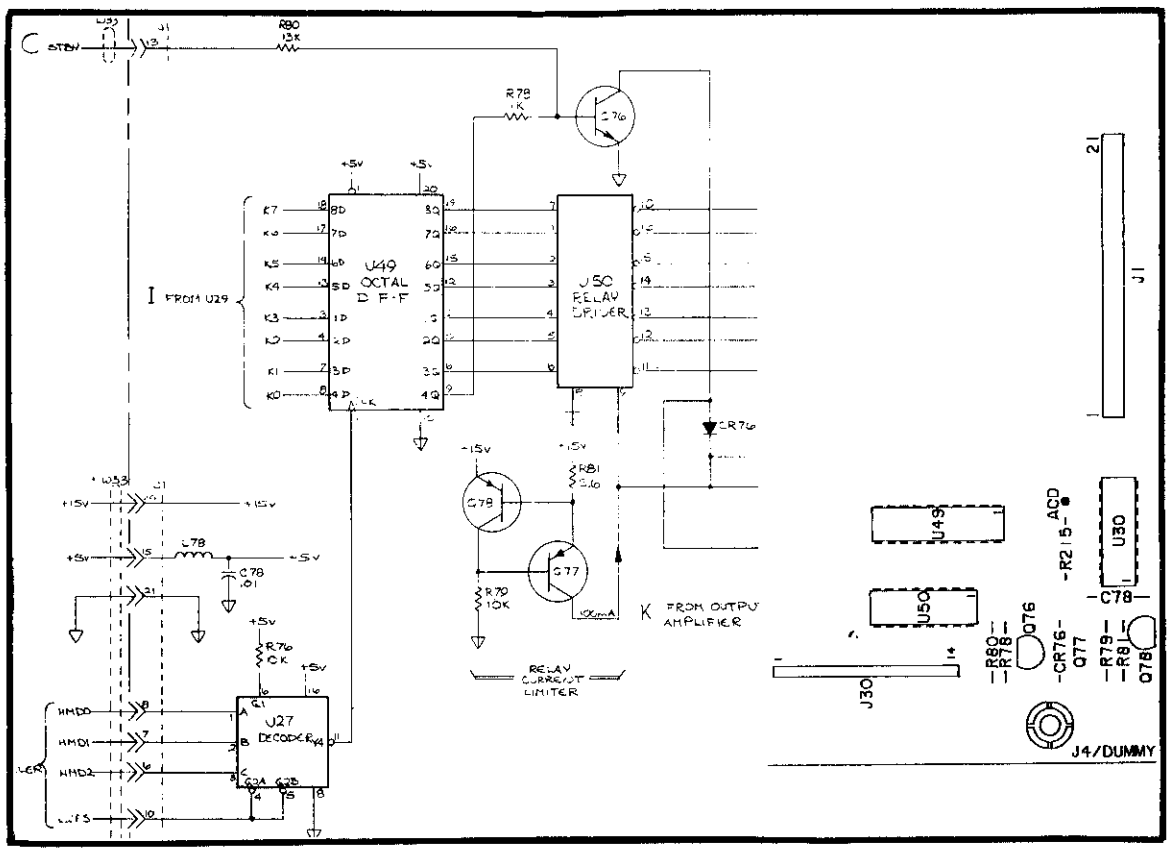

Figure 7-18. Relay Drive Circuitry (Serial Numbers 1748A01075 and Below).

Δ5 - Page 8-L-3/8-L-4, Figure 8-45.

Affected instruments: serial numbers 1748A04400 and below.

Instruments in this range may have an A14(A4) board which contains connectors J1 (p/n 1251-4494) and J30 (p/n 1251-4390) for use with cables W32 (p/n 8120-2577) and W30 (p/n 8120-2576). The older (black) connectors and (white) cables have been replaced on newer boards by more reliable connectors J1 (orange - p/n 1251-6567) and J30 (orange - p/n 1251-5064), and cables W32 (gray - p/n 8120-3108) and W30 (gray - p/n 8120-3216). The newer connectors are incompatible with the older cables as are the newer cables incompatible with the older connectors. Should replacement of the

A14(A4) assembly in one of the above instruments become necessary, refer to paragraph 8-113 in Section VIII for additional replacement information. Note that cable/connector changes for part numbers 1251-6567 and 8120-3108 occured beginning with instrument serial number 1748A04250.

7-47. Service Group M - Options: High Voltage Output (Opt.002) (03325-66508) and High Stability Reference (Opt. 001) (03325-66509) Δ7.

7-48. There have been no engineering or manufacturing changes to the 03325-66508 or 03325-66509 assemblies.

7-49. Service Group N - Sweep Drive Circuits (P/O 03325-66514) Δ5.

7-50. **A14 - Past to Present.** Table 7-14 briefly summarizes the engineering and manufacturing changes that have brought A14(A4) to its current revision.

Table 7-14. A14(A4) Board Revisions.

Board Revision	Instruments Shipped With This Revision*	Board Changes
A4 - Rev B**	1748A00101 - 1748A00190	—
- Rev C	1748A00191 - 1748A00470	went Rev C following PC trace and manufacturing modifications.
- Rev D	1748A00471 - 1748A01075	went Rev D following manuf. changes and the addition of CR108, CR109, and R55.
- Rev E	1748A01076 - 1748A01900	went Rev E following mod. to the relay driver and dc offset control portion of A4.
A14 - Rev A	1748A01901 - 1748A08790	went A14 Rev A when output amp (Svc. Grp. K) was re-designed. R142 was also added.
- Rev B	1748A08791 - 1748A14537	went Rev B with changes to dc offset and amptd. control circuitry.
- Rev C	1748A14538 - Present	went Rev C following PC trace mod. to level comparator (U42) ckty.
* Note that all serial number ranges are approximate.		
** No A4 Rev A boards were ever produced.		

7-51. The following backdating information pertains to the sweep drive portion of A14(A4).

Δ - Page 8-N-3/8-N-4, Figure 8-48.

Affected instruments: serial numbers 1748A00470 and below.

For instruments in this range, R6 is 20kΩ, part number 2100-0558. If U5 is replaced in any of these instruments, it may be necessary to replace R6 with part number 2100-3253 (50kΩ) in order to perform the X-Drive adjustment.

Δ - Page 8-N-3/8-N-4, Figure 8-48.

Affected instruments: serial numbers 1748A01900 and below.

Instruments in this serial number range do not have Q4.

Δ5 - Page 8-N-3/8-N-4, Figure 8-48.

Affected instruments: serial numbers 1748A04250 and below.

These instruments may have an A14(A4) board which contains connector J1 (p/n 1251-4494) for use with cable W32 (p/n 8120-2577). The older (black) connector and (white) cable have been replaced on newer boards by a more reliable connector (orange - p/n 1251-6567) and cable (gray - p/n 8120-3108). The newer connectors are incompatible with the older cables as are the newer cables incompatible with the older connectors. If the A14(A4) assembly is replaced in one of the above instruments, refer to paragraph 8-113 in Section VIII for additional replacement information.

7-52. Service Group 0 - Power Supplies (03325-66502) Δ8.

7-53. **A2 - Past to Present.** Table 7-15 briefly summarizes the engineering and manufacturing changes that have brought A2 to its current revision.

Table 7-15. A2 Board Revisions.

Board Revision	Instruments Shipped With This Revision*	Board Changes
A2 - Rev A	1748A00101 - 1748A00150	—
- Rev B	1748A00151 - 1748A01075	went Rev B when PC trace modifications were made.
- Rev C	1748A01076 - 1748A05825	went Rev C with the addition of R34, R35, Q8, and F2.
- Rev D	1748A05826 - 1748A07339	went Rev D when the relay current limiter circuitry of Q13 and Q12 were added.
- Rev E	1748A07340 - 1748A15073	went Rev E following PC trace mod. to eliminate a potential shock hazard. See Service Note 3325A-11B-S.
- Rev F	1748A15074 - Present	went Rev F following mods. to widen PC trace spacings.

* Note that all serial number ranges are approximate.

7-54. The following backdating information pertains to the power supply assembly 03325-66502.

Δ8 - Page 8-O-3/8-O-4, Figure 8-49.

Affected instruments: serial numbers 1748A05825 and below.

Instruments in this range contain the fuse F2 shown in Figure 7-19 in place of the circuitry shown in Figure 8-49. See Service Note 3325A-12 for details and procedures for improving the reliability of the over-voltage protection circuitry.

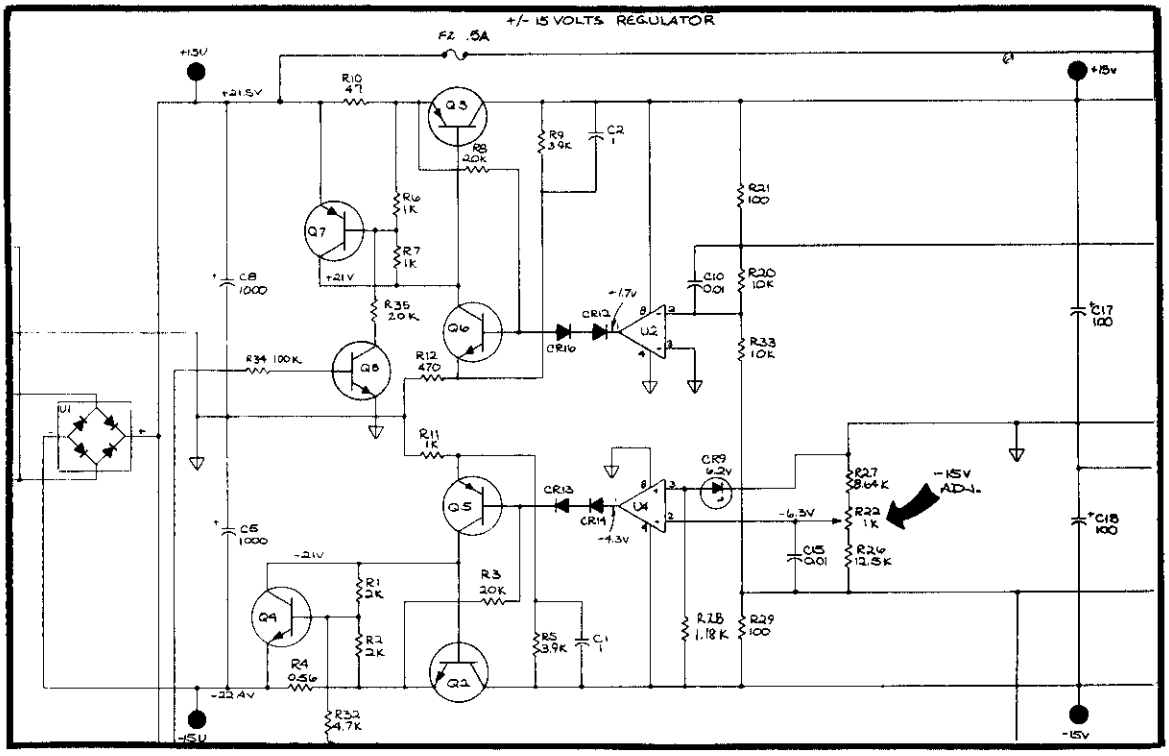

Figure 7-19. Location Of F2 (Serial Numbers 1748A05825 to 1748A01076).

Δ8 - Page 8-O-3/8-O-4, Figure 8-49.

Affected instruments: serial numbers 1748A01075 and below.

Instruments in this serial number range do not have R35, R34, Q8, or F2. (See Figure 7-20.)

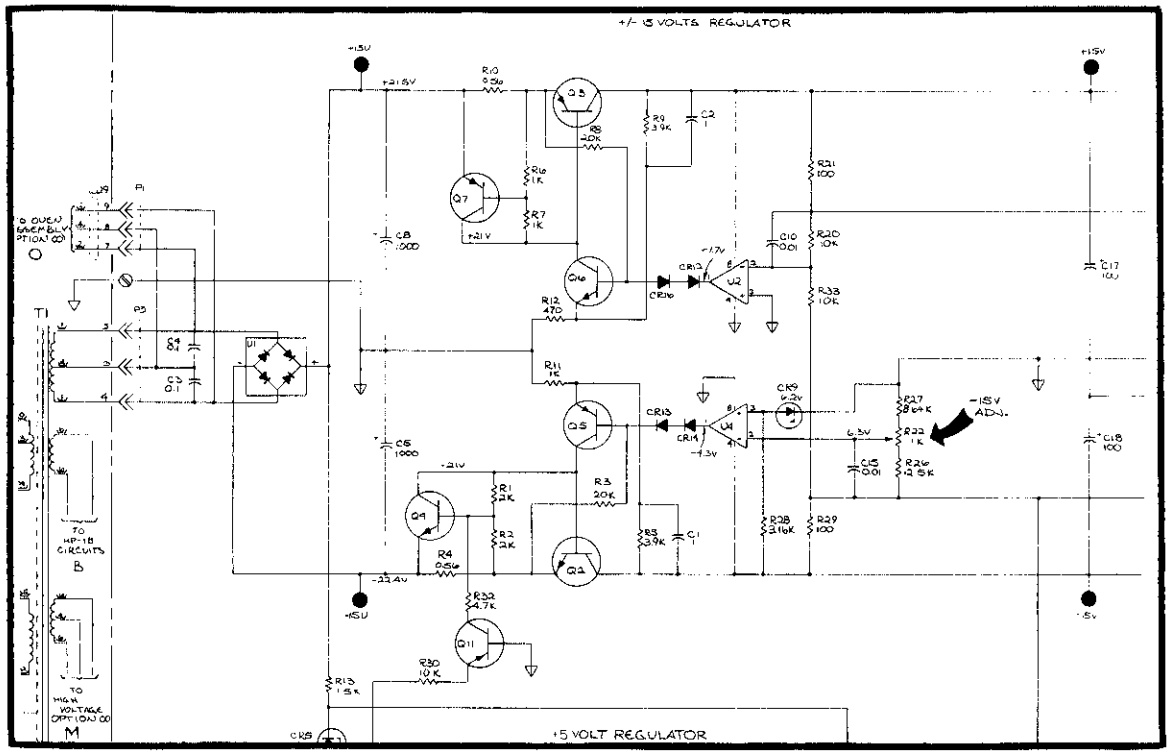

Figure 7-20. ±15V Regulator (Serial Numbers 1748A01075 and Below).

Δ8 - Page 8-O-3/8-O-4, Figure 8-49.

Affected instruments: serial numbers 1748A01200 and below.

Instruments in this range do not have R36. See Service Note 3325A-1B for details and procedures for a recommended modification to the over-voltage protection circuitry.

Affected instruments: Serial numbers 1748A07260 and below. Instruments in this range do not have CR18.

Δ8 - Page 8-O-3/8-O-4, Figure 8-49.

Affected instruments: serial numbers 1748A07339 and below.

Note that for instruments in this serial number range, there is a potential electrical shock hazard present with the A2 board. A trace on the underside of A2 could pass within 0.5mm of a folded edge of the instrument's floating sub-chassis. This trace carries one-half the line voltage in 220V/240V applications. For 100V/120V applications, this is a neutral trace. See Product Safety Service Note 3325A-11B-S for additional information and corrective procedures.

WARNING

These servicing instructions are for use by trained service personnel only. To avoid electrical shock, do not perform any servicing other than that contained in the operating instructions unless you are qualified to do so.

SECTION VIII
SERVICE

8-1. INTRODUCTION.

8-2. This section contains information required to service the Model 3325A Synthesizer/Function Generator. This includes the theory of operation, block diagrams, troubleshooting procedures, and schematic diagrams. Most of the service information is divided into service groups, which are identified alphabetically. Each service group contains the schematic diagram, troubleshooting, and other pertinent information for a specific area of the instrument. A foldout functional block diagram follows Service Group O. The following circuits are included in the service groups:

Assembly	Circuit	Service Group
A21	Voltage Controlled Oscillator	D
A21	N,F Counter	E
A21	Fractional N Analog Circuits	F
A2	Power Supplies	O
A3	VCO Buffer	D
A3	30 MHz Reference and Dividers	G
A3	Mixer	H
A14	D/A Converter and Sample/Hold	I
A14	Function Circuits	J
A14	Output Amplifier and Level Comparator	K
A14	Relay Drivers	L
A14	Sweep Drive Circuits	N
A5	Keyboard and Display	A
A6	HP-IB Circuits	B
A6	Control Circuits	C
A23 or A7	Attenuator	L
A8	High Voltage Output Option 002	M
A9	High Stability Frequency Reference Option 001	M

Signature analysis information begins with paragraph 8-128.

8-3. BASIC THEORY.

8-4. A simplified block diagram of the 3325A circuits is shown in Figure 8-1. In response to programming inputs from the Keyboard or the HP-IB, the Control circuits set the frequency, signal level, and output attenuation. The Frequency Synthesis circuits generate a sine wave at a frequency determined by digital information from the Control circuits. This sine wave is applied to the Function circuits where both the output function and signal level are determined, again by digital control. The signal level from the Output Amplifier can be tested in the Level Comparator to determine if a level correction is needed, thus providing an automatic amplitude calibration. If amplitude problems are encountered, it is important to disable this auto calibration. See section 8-102. Attenuator range is selected by the Control circuits to provide (in conjunction with Level Control) the desired output signal amplitude. Program parameter data stored in Control is transferred to the display when that parameter entry prefix key is pressed or the parameter prefix mnemonic is programmed on the HP-IB.

8-5. THEORY OF OPERATION.

8-6. The following theory is a general description of each of the circuit blocks in the 3325A. A foldout functional block diagram of the 3325A follows Service Group O. Additional information on individual circuits may be found within the service groups. Figure 8-2 is a basic block diagram of the logic circuits, which interface with the processor (and with each other through the processor) to control the operation of the instrument. The Machine Data Bus, which consists of eight parallel lines labeled HMD0 through HMD7, is the principal means of data exchange between the control circuits and other parts of the instrument.

8-7. Keyboard and Display (Service Group A).

8-8. Keyboard Scan. Figure 8-3 is a block diagram of the Keyboard and Display circuits. To determine if a key has been pressed, a single high bit is shifted into the first position of the 16-bit register, and the four-line output of the keyboard matrix is read onto the machine data bus by the Read Keyboard clock signal. The high bit is then shifted one position in the register and the keyboard matrix output is read again. This process is repeated through the twelve input lines to the matrix. The high input bit is inverted by the keyboard buffers. A low level on one of the four matrix output lines indicates that a key has been pressed, and the control circuits initiate the proper action. After a low level has been detected, the control circuits look for a high level from the same key before the same action can be repeated. In other words, if the 5 key has been pressed, only one 5 will be processed even though the key is held through more than one keyboard scan cycle.

8-9. Numeric Display. The same high bit that is shifted through the 16-bit shift register to scan the keyboard enables one of the eleven numeric display digits in each of the first eleven positions of the register. When a digit is enabled, eight bits of data (parallel) from the Machine Data Bus are entered in the 8-bit latch by a Write Keyboard Display Data clock signal. Each low bit in this data enables one of the eight current sources, which supplies current to the proper segment (or decimal point) of the enabled digit.

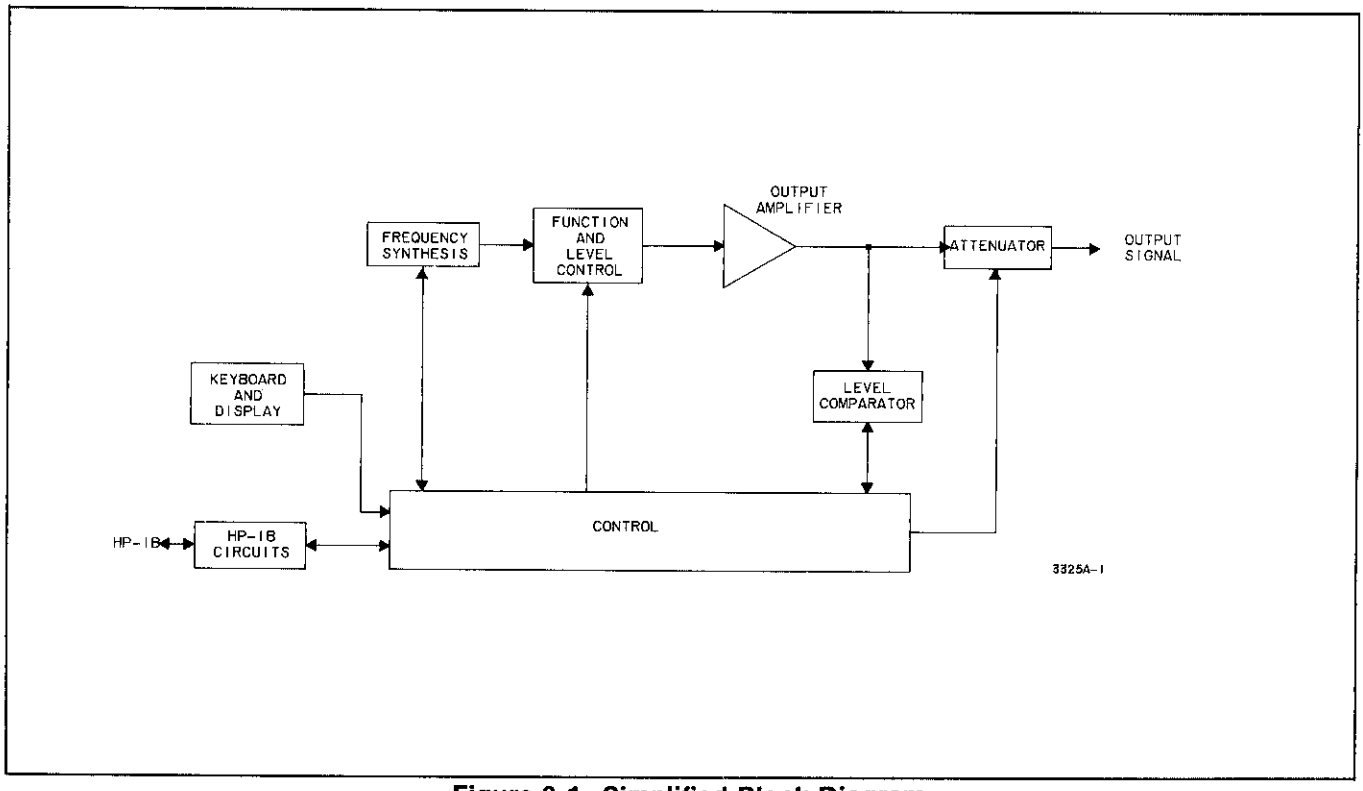

Figure 8-1. Simplified Block Diagram.

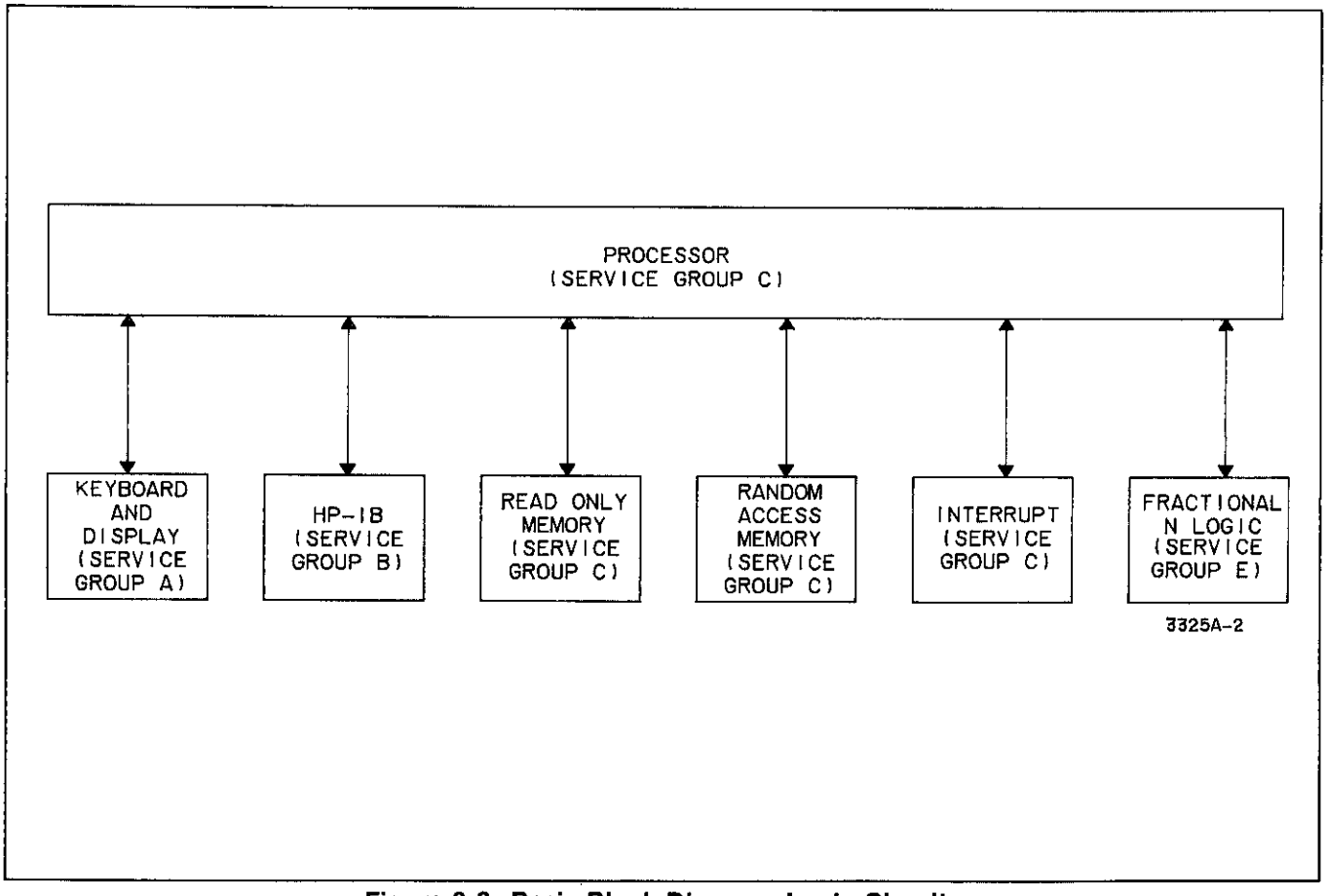

Figure 8-2. Basic Block Diagram, Logic Circuits.

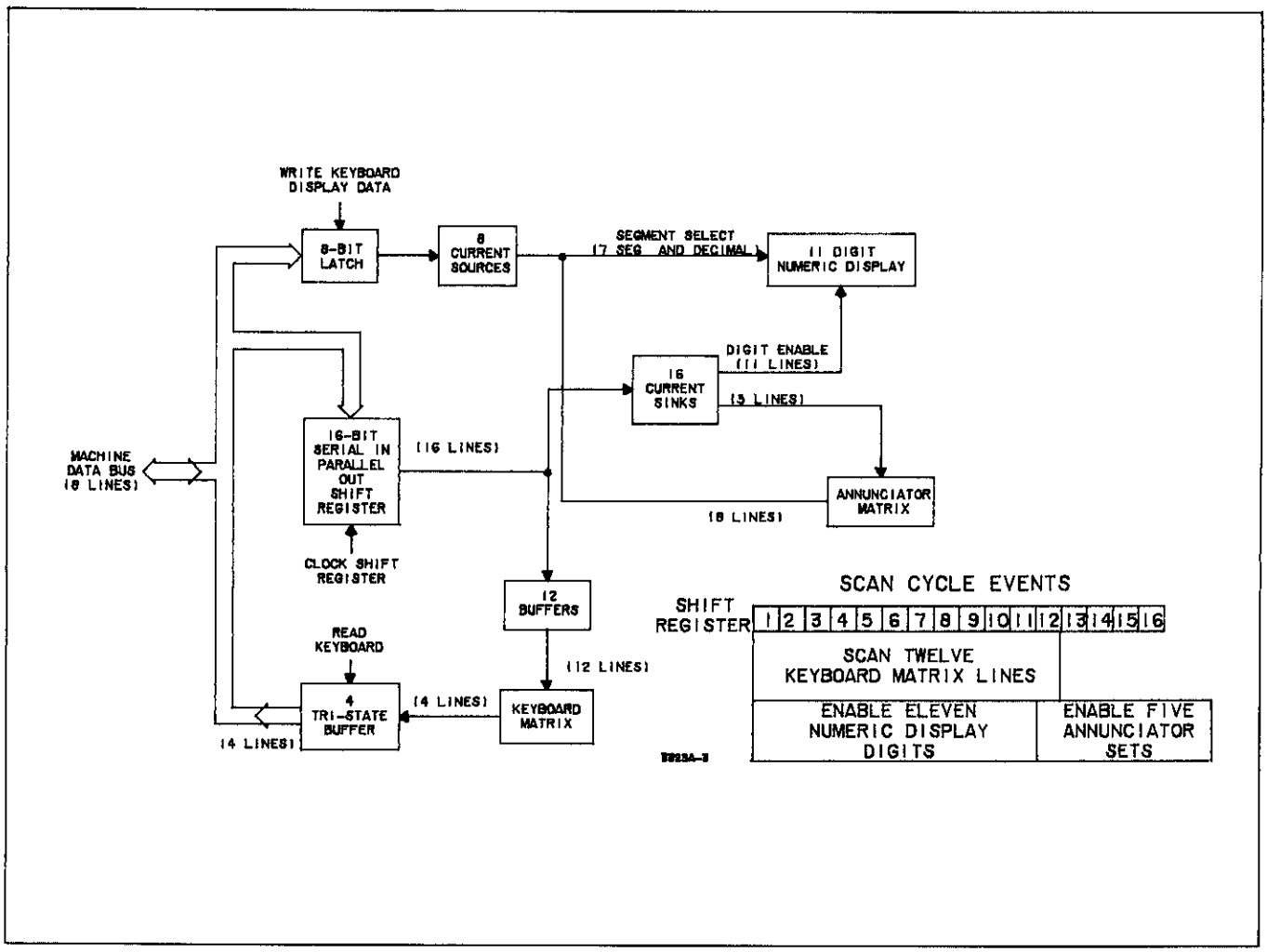

Figure 8-3. Keyboard and Display Block Diagram.

8-10. Annunciator Matrix. In each of the last five positions of the 16-bit shift register, the high bit that is being shifted through enables one of five sets of annunciators. Then another set of eight data bits is entered into the 8-bit latch. Each low bit in this data set also turns on one of the eight current sources, which supplies current to the proper annunciator.

8-11. Scan Cycle. Approximately 21 milliseconds are required for a complete scan of the Keyboard and Display. During each scan cycle, the events shown in Figure 8-3 happen concurrently.

8-12. HP—IB Circuits (Service Group B).

8-13. Data Input. Figure 8-4 is a block diagram of the data input path. The low true data from the HP—IB DIO lines is inverted to high true in the Bus Receivers. It is then loaded into the last eight positions of the 12-bit parallel-in/serial-out shift register when the Load Data Input signal is low. The data loaded into the first four bits of this register is information concerning the ATN, REN, and IFC management lines. Data is then shifted serially across the isolation barrier into an 8-bit serial-in/parallel-out shift register. The first four bits (status) are shifted across, gated into the tri-state buffer by the Read Bus Data signal, and onto the Machine Data Bus. After the control circuits have accepted this information, the eight bits of HP—IB data are transferred in the same manner.

8-14. Data Output. The output data path, shown in Figure 8-5, is essentially the reverse of the input data path. Parallel data from the Machine Data Bus is loaded into a parallel-in/serial-out shift register by the Write Bus Data signal. It is then shifted serially across the isolation barrier and into the same 12-bit shift register used for input data. However, for output data it is used as a serial-in/parallel-out register. The data is then loaded into an 8-bit latch by the Load Data Out signal, where it is available to the Bus Drivers. When the Bus Drivers are enabled by the Data Out Enable signal, the data is inverted and placed on the HP—IB DIO lines. The eighth (most significant) data bit becomes the End or Identify

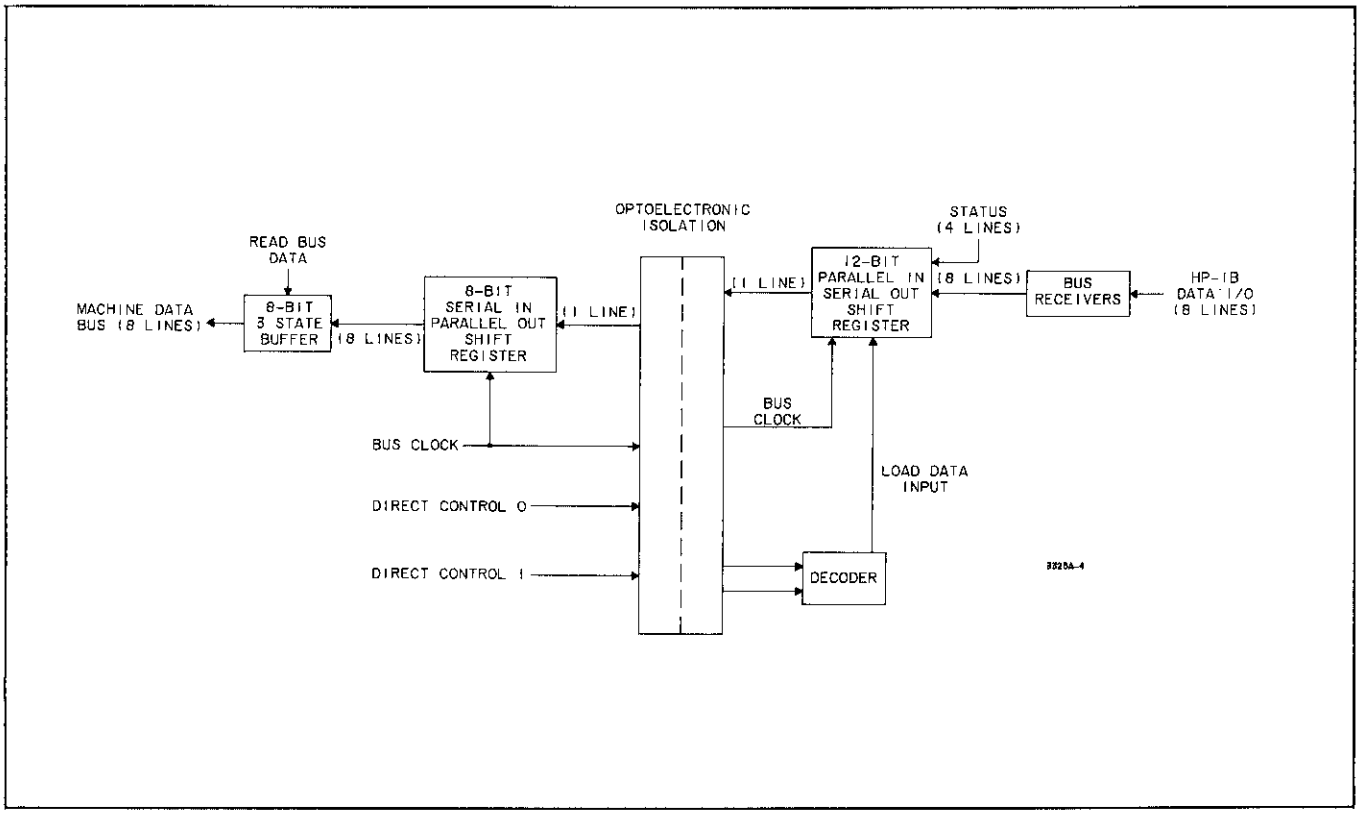

Figure 8-4. HP—IB Data Input Path.

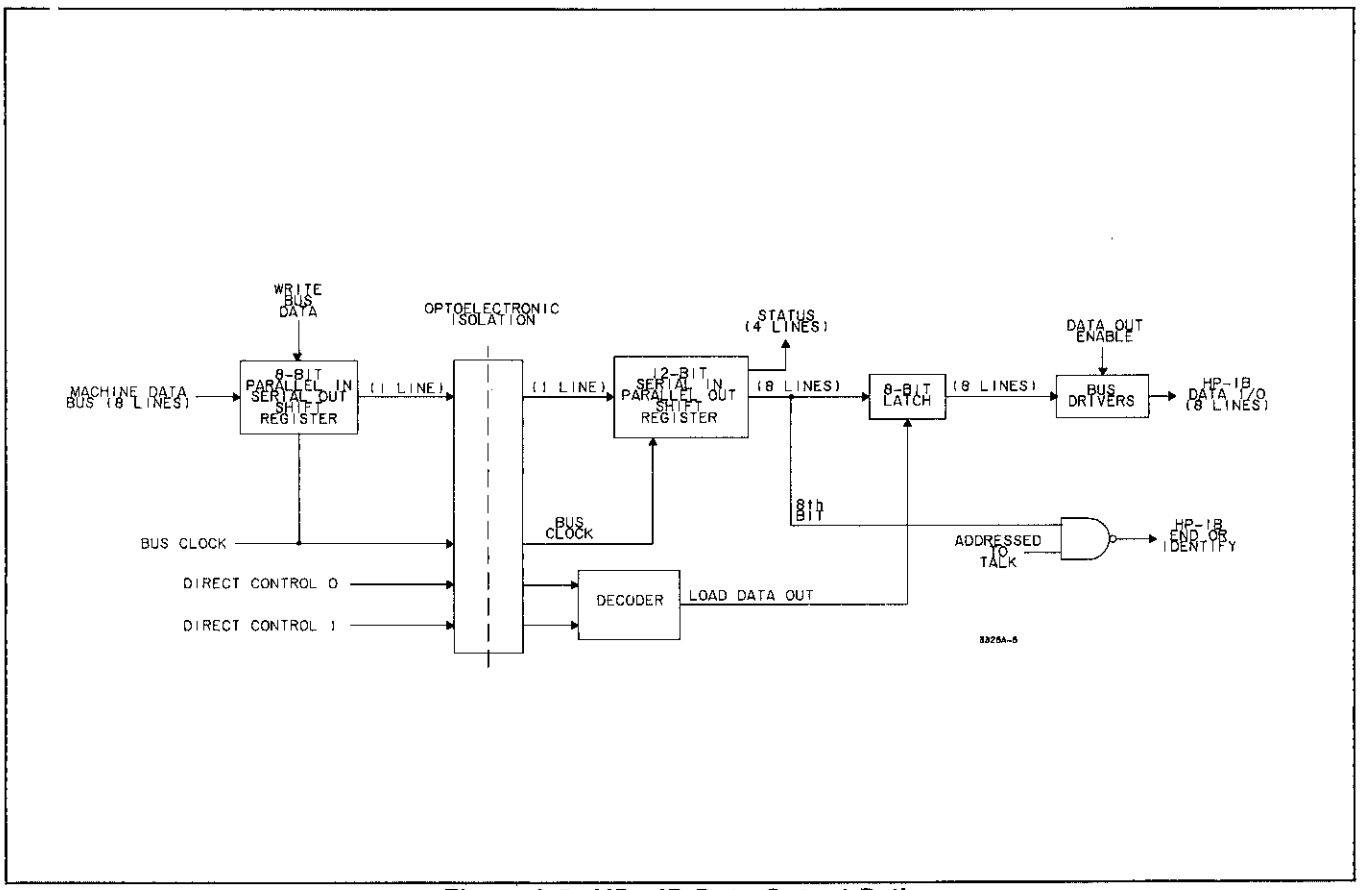

Figure 8-5. HP—IB Data Output Path.

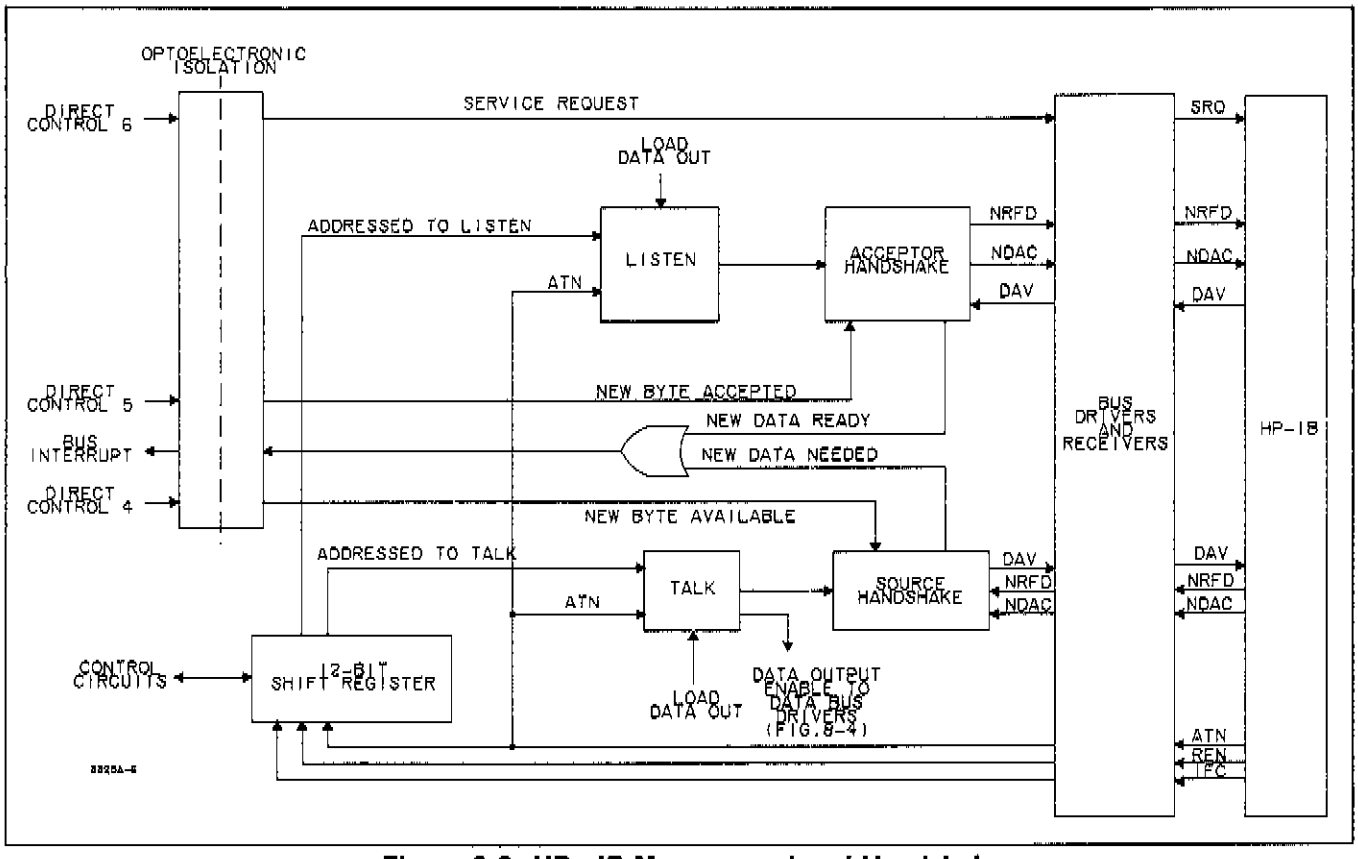

Figure 8-6. HP—IB Management and Handshake.

(EOI) signal to the bus if the 3325A is addressed to talk and ATN is false.

8-15. Acceptor Handshake. The Listen circuits (shown near the upper center of Figure 8-6) enable the Acceptor Handshake block to operate if the 3325A is addressed to listen or if ATN (Attention) is true. When it is not addressed to listen but ATN is true, it accepts data in order to detect its listen or talk address or the untalk command. After the 3325A has been addressed to listen it accepts programming data when ATN is false and looks for its talk address or the unlisten command when ATN is true. When the HP—IB DAV (Data Valid) signal indicates that data is ready on the bus, the Acceptor Handshake circuits output New Data Ready, which becomes a Bus Interrupt signal to the processor. The Acceptor circuits also set NRFD (Not Ready For Data) to indicate to the bus that the 3325A is in the process of accepting the data byte. After the byte has been accepted, the processor outputs a New Byte Accepted to the Acceptor circuits, which then resets the NDAC (Data Accepted) line to high.

8-16. Source Handshake. The Talk circuits enable the Source Handshake block only when the 3325A is addressed to talk and ATN is false. A New Byte Available signal from the processor tells Source Handshake to set DAV if NRFD is high indicating that all listeners are ready for data. After a byte of data has been accepted by the listener(s), indicated by NDAC going high, the Acceptor circuits output a New Data Needed signal which becomes a Bus Interrupt to the processor.

8-17. Management Lines. The ATN (Attention), REN (Remote Enable), and IFC (Interface Clear) lines provide inputs to the 12-bit shift register and are used as HP—IB status information inputs to the control circuits. A direct control output from the processor provides a Service Request (SRQ) signal to the HP—IB system controller.

8-18. Control Circuits (Service Group C).

8-19. The Control circuits include all the blocks in Figure 8-2 labeled Service Group C, plus other circuits such as Read and Write Control and the 1.2 MHz control clock oscillator. Figure 8-7 is a basic block diagram of the Control circuits. A brief definition of some circuit components may be helpful.

Processor: Commonly known as a microprocessor. As the name implies, this device processes its input information and determines what data and/or instructions to issue.

ROM: A Read Only Memory issues a predetermined set of data in response to a given set of input data, called an address.

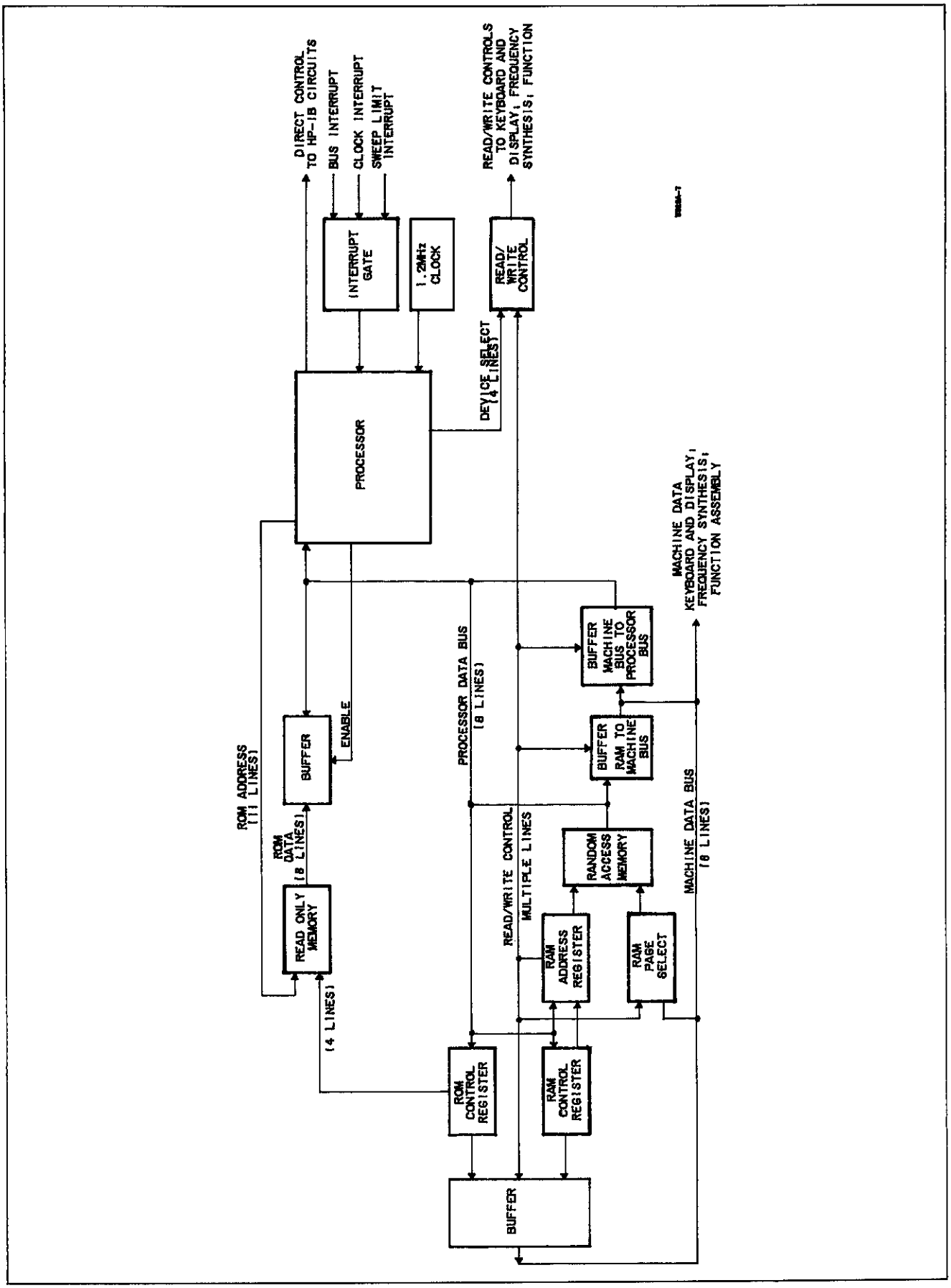

Figure 8-7. Basic Block Diagram of Control Circuits.

RAM: A Random Access Memory, or Read/Write Memory, accepts data (data can be written into it) which can then be read out at a later time. Data location is determined by the address input.

8-20. Read Only Memory. The 3325A Read Only Memory (ROM) consists of four units, which are selected by signals from the ROM Control Register. Designed into the ROM are the fixed routines or responses required in the 3325A operation. One of these routines, for example, reads the present output frequency data from the RAM and places it in the display when the FREQ entry key is pressed. The keyboard and display scan routines and test routines are also a part of the ROM information. A character received on the HP—IB is compared to ROM data to determine its validity and the appropriate action to be taken if the character is valid.

8-21. Random Access Memory. Variable or temporary information is stored in the Random Access Memory (RAM). This includes all program information from either the front panel or the HP—IB. Data stored at any RAM address can be changed by programming new data for the same parameter, function, or operation. RAM data can be read out without destroying the data. For example, when the FREQ entry key is pressed, the present frequency data is entered in the display and is also retained in the RAM memory location.

8-22. Fractional N Control IC. The Fractional N Control IC (see Service Group E) performs several functions vital to control of the 3325A.

a. It calculates the ÷ N and Pulse Remove data for the phase lock loop in the Frequency Synthesis circuits. (Explanation of the 3325A frequency synthesis begins with Paragraph 8-24). This information is updated every 10 microseconds.

b. It increments or decrements the output frequency during a sweep function and outputs a Sweep Limit Flag when the start or stop frequency is reached. It also outputs a Sweep Limit Flag at the marker frequency during a sweep up.

c. Under control of algorithms performed by the processor, it performs arithmetic functions—for example, the arithmetic for conversion of amplitude in V p-p to V rms or dBm.

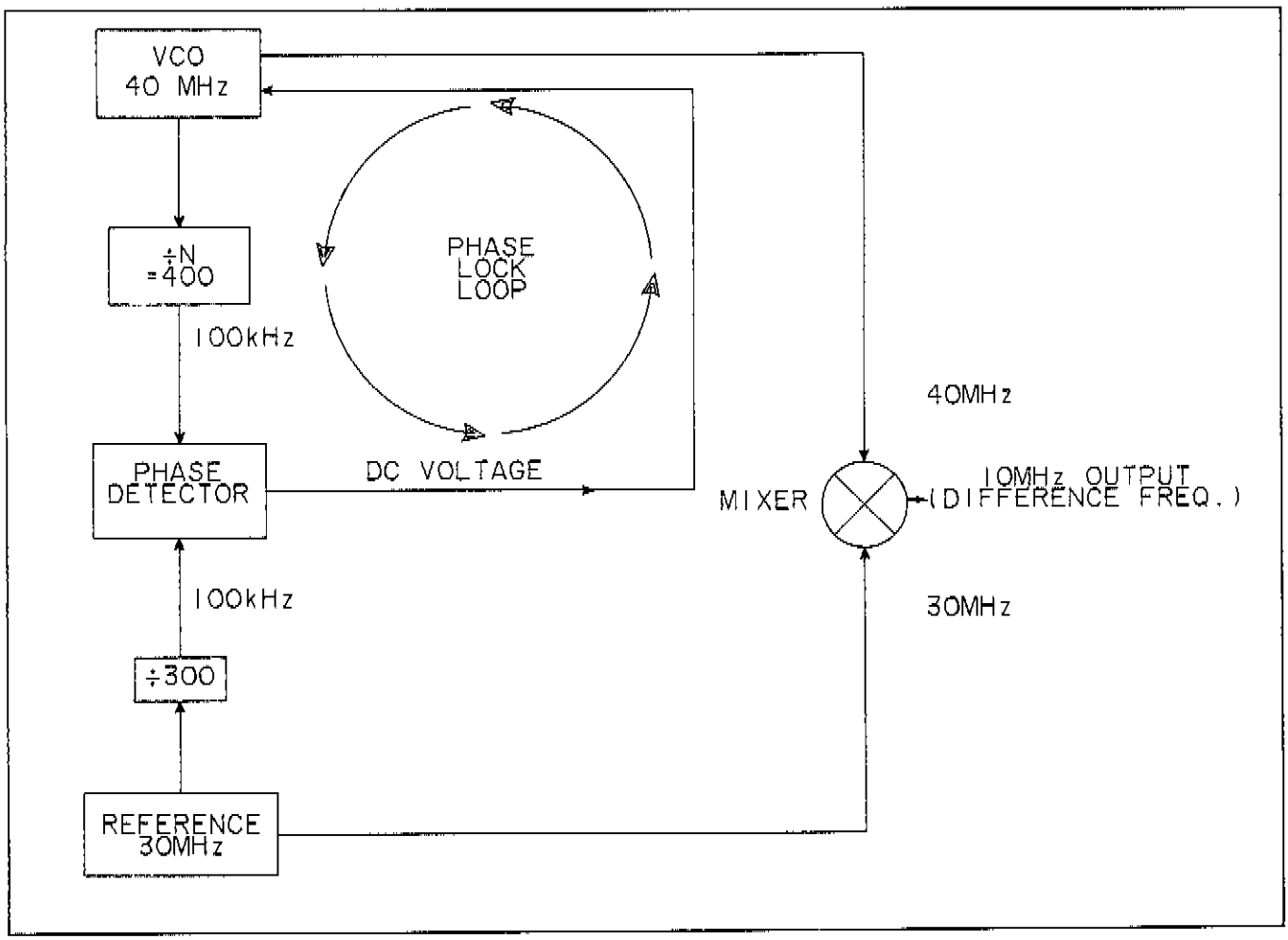

Figure 8-8. Phase Lock Loop.

8-23. Processor. The Processor coordinates the operation of all the other control logic circuits. Device select outputs from the processor are decoded into read, write, and enable commands to various logic elements such as the RAM, control registers, and buffers. Direct Control input/output lines provide information to and from the HP-IB circuits. Interrupt capability allows the Processor to be interrupted by the HP-IB or by a Sweep Limit Flag.

8-24. Frequency Synthesis.

8-25. The Frequency Synthesis circuits are found in Service Group D, Voltage Controlled Oscillator; Service Group E, Fractional N Counter; and Service Group F, Fractional N Analog.

8-26. How does the 3325A generate a given frequency? Assume that the output desired is an even 10 MHz. A method for obtaining this frequency is illustrated in Figure 8-8. Basically, the 3325A uses this method.

8-27. The frequency of the VCO (Voltage Controlled Oscillator), in Figure 8-8, is controlled by the dc voltage out of the phase detector. This dc voltage reflects any phase change between the two detector input signals. Consequently, if the VCO frequency changes, the phase detector output changes to correct the VCO. This is known as a phase lock loop (PLL).

8-28. If we want to change the output from 10 MHz to 20 MHz, it is necessary merely to change the ÷ N number from 400 to 500. This obviously changes the divided VCO input to the phase detector to 80 kHz. The phase detector then uses the phase difference between its two inputs to change the VCO frequency to 50 MHz. This returns the phase detector input to 100 kHz, and the loop is again phase locked. It takes the 3325A about 50 milliseconds to make this change. The ÷ N number is determined by control circuits in response to front panel or remote programming.

8-29. The 3325A sine wave frequency range is essentially from zero to 20 MHz; consequently, the VCO frequency range is normally 30 MHz to 50 MHz. This dictates that the ÷ N number be a 3-digit integer between 300 and 500 (÷ N can be only three digits in the 3325A). For example, if ÷ N is 398, the VCO frequency is adjusted to 39.8 MHz (398 x 100 kHz) and the output is 9.8 MHz.

8-30. Now let us look at a more detailed diagram of the phase detector block (Figure 8-9). The control voltage to the VCO is the output of a Sample/Hold amplifier which samples the integrator output at the proper time and at regular intervals. Ideally, this voltage would be exactly the same at each sampling time and the VCO frequency would remain constant. Let us assume that this is true, and that the ÷ N number is 400. In this case, the output of the phase comparator would be a series of pulses of equal width. Each pulse turns on a current source which causes a given amount of charge to be placed on the integrator. At a specified time this voltage is stored on the Sample/Hold amplifier capacitor (Figure 8-9). The integrator output is illustrated in Figure 8-10. The charge slope is much greater than the discharge slope because the phase comparator current source has about ten times the magnitude of the bias current source.

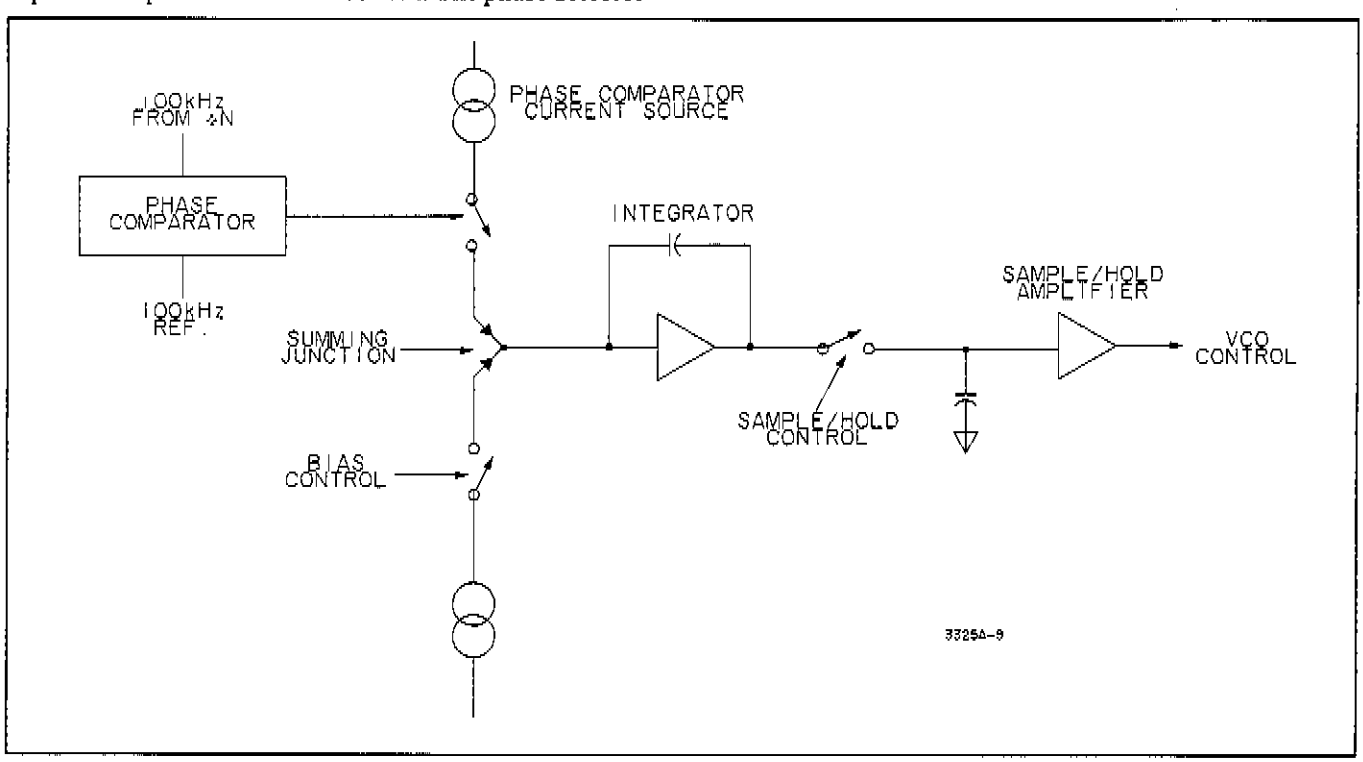

Figure 8-9. Phase Detector.

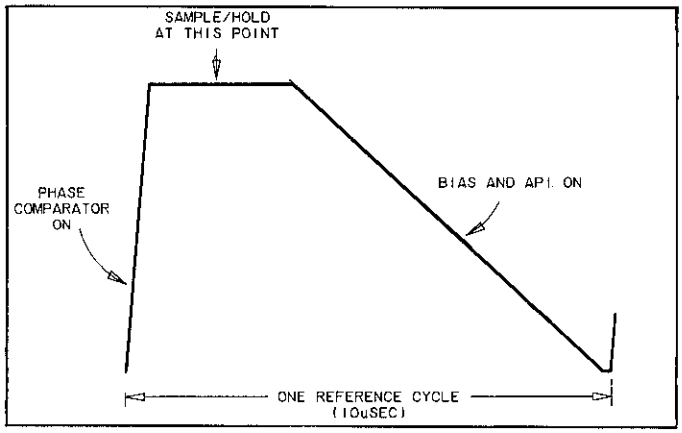

Figure 8-10. Integrator Output.

8-31. Immediately after a sample, the bias current source is turned on to discharge the integrator capacitor to the level it held before the phase comparator current was allowed to charge it. If this were not done, the charge would continue to accumulate to the limit permitted by the power supplies and remain at that level (nullifying the entire PLL scheme). The bias current is controlled by a pulse from the fractional N control IC.

8-32. Up to this point, we have considered only the situation where ÷ N is a whole number consisting of three digits. Now suppose an output of 10.04 MHz is desired. This would require the VCO frequency to be 40.04 MHz and the ÷ N number to be 400.4. (The number 400.4 is referred to as ÷ N.F. The number 400 is represented by N, and the fraction .4 may be called F, or the fractional N.) Since the existing phase lock system will not allow ÷ N to be four digits, some additional circuits are needed to make the VCO operate at a frequency of 40.04 MHz, and at the same time provide a signal to the phase comparator equal to 100 kHz. Two of these circuits are the Digital-to-Analog (D/A) converter and pulse remove blocks added in Figure 8-11.

8-33. If the VCO operated at 40.04 MHz and ÷ N were 400, then the divided VCO signal to the phase comparator would be 100.1 kHz and would be compared to the 100.0 kHz reference. This would result in an increasing phase comparator charge current to the integrator. To compensate for this increased charge, the discharge current from the bias source is adjusted by means of Analog Phase Interpolation (API) information from the fractional N control IC. The phase (frequency) difference between 40.04 MHz and 40.00 MHz is accumulated digitally in the control IC and applied through five lines to a digital-to-analog converter. The D/A output current is subtracted from the bias current to discharge the integrator to the proper level during each sampling period, effectively cancelling the increased charge from the phase comparator.

8-34. Only part of the problem is solved, however, because if the PLL were to continue operating in this manner, the phase comparator output would continue to increase beyond practical limits. To prevent this, a "pulse remove" technique is used. In effect, the accumulated phase difference (in the Control IC) causes the ÷N counter to count one extra cycle (÷ 401) each time the phase accumulator passes through unity. This has the effect of "removing" a cycle of VCO frequency, and the divided signal to the phase comparator is now an average of 100 kHz.

8-35. To accumulate the phase difference, the twelve least significant digits in a "frequency register" (contained in the Fractional N control IC) are added to

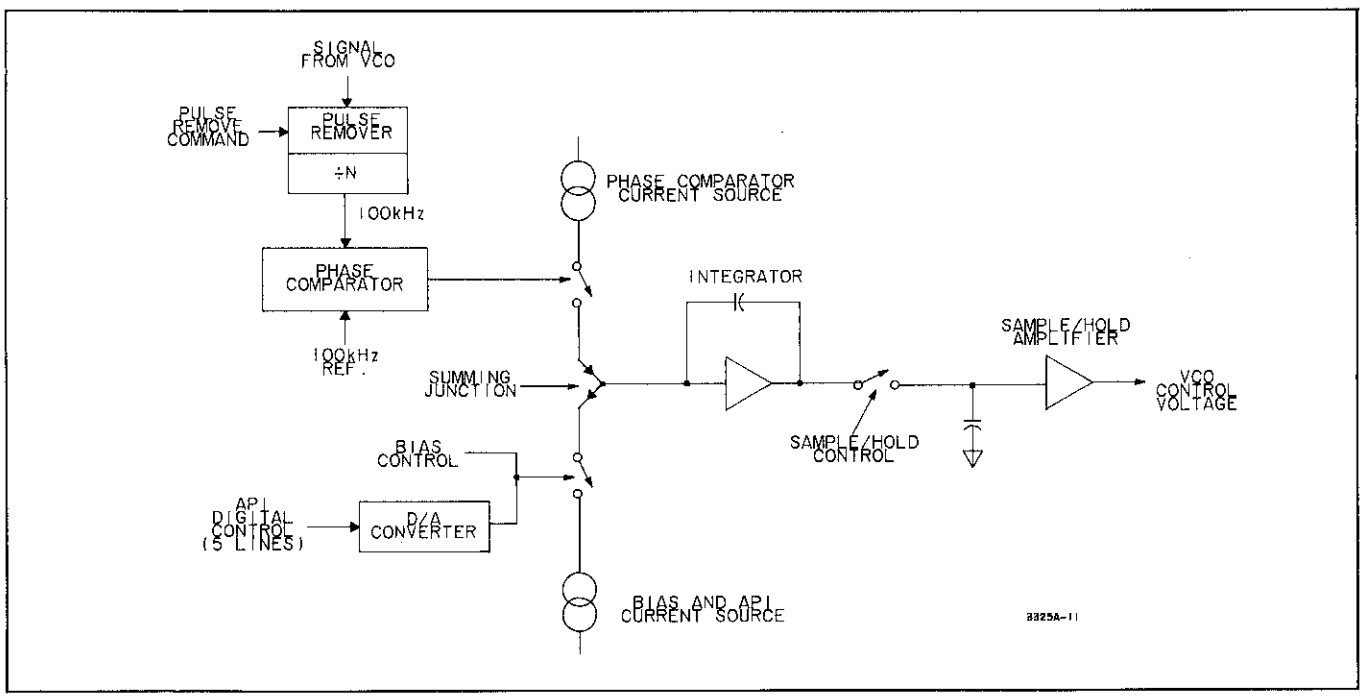

Figure 8-11. Addition of D/A Converter and Pulse Remove Blocks.

the twelve digits in the phase accumulator, and the sum is stored again in the accumulator. This addition takes place every 10 microseconds (once for each cycle of the 100 kHz reference). Figure 8-12 illustrates this process for the example we are using.

8-36. This example has used a fractional N of .4. If the output frequency were 10.004 MHz instead of 10.04 MHz, the fractional part would be .04, and both the phase comparator output and the phase accumulator content would increase at one-tenth the previous rate. As another example, if the output frequency were 10.09 MHz, the fractional N would be .9, and a pulse remove command would be required for 9 out of every 10 reference cycles.

8-37. Fractional N Counter. The ÷ N (Fractional N) counter consists basically of three presettable counters in series, shown in Figure 8-13. The counters for the two most significant digits (of the 3-digit N number) are decade counters. The least significant digit counter consists of a ÷ 5 counter and a ÷ 2 prescaler which can be made to divide by three as necessary. Presettable counters are used because ÷ N must be variable, as explained below.

8-38. The preset number that is loaded into the counter in BCD (binary coded decimal) form is the 9's complement of the N number. N is determined by the first three digits of the VCO frequency.

	Example 1	Example 2
Sine wave output	10 000 000.0 Hz	100 000.0 Hz
Reference frequency	30 000 000.0 Hz	30 000 000.0 Hz
VCO frequency	40 000 000.0 Hz	30 100 000.0 Hz
÷ N	40 0	30 1

To determine the 9's complement, ÷ N is subtracted from 999 in the fractional N control IC.

	999	999
÷ N	400	301
9's complement	599	698

8-39. The ÷ N counter begins at the preset number (599 in example 1), counts to 999 and then reloads the same number unless a new frequency has been programmed. One output pulse occurs for each time the counters reach 999; consequently, if 400 VCO cycles (599 to 999) are counted for every output pulse, VCO has been divided by 400. The output pulse is derived from the bias pulse issued by the fractional N control IC. To provide the proper stable phase relationship to the VCO signal, this

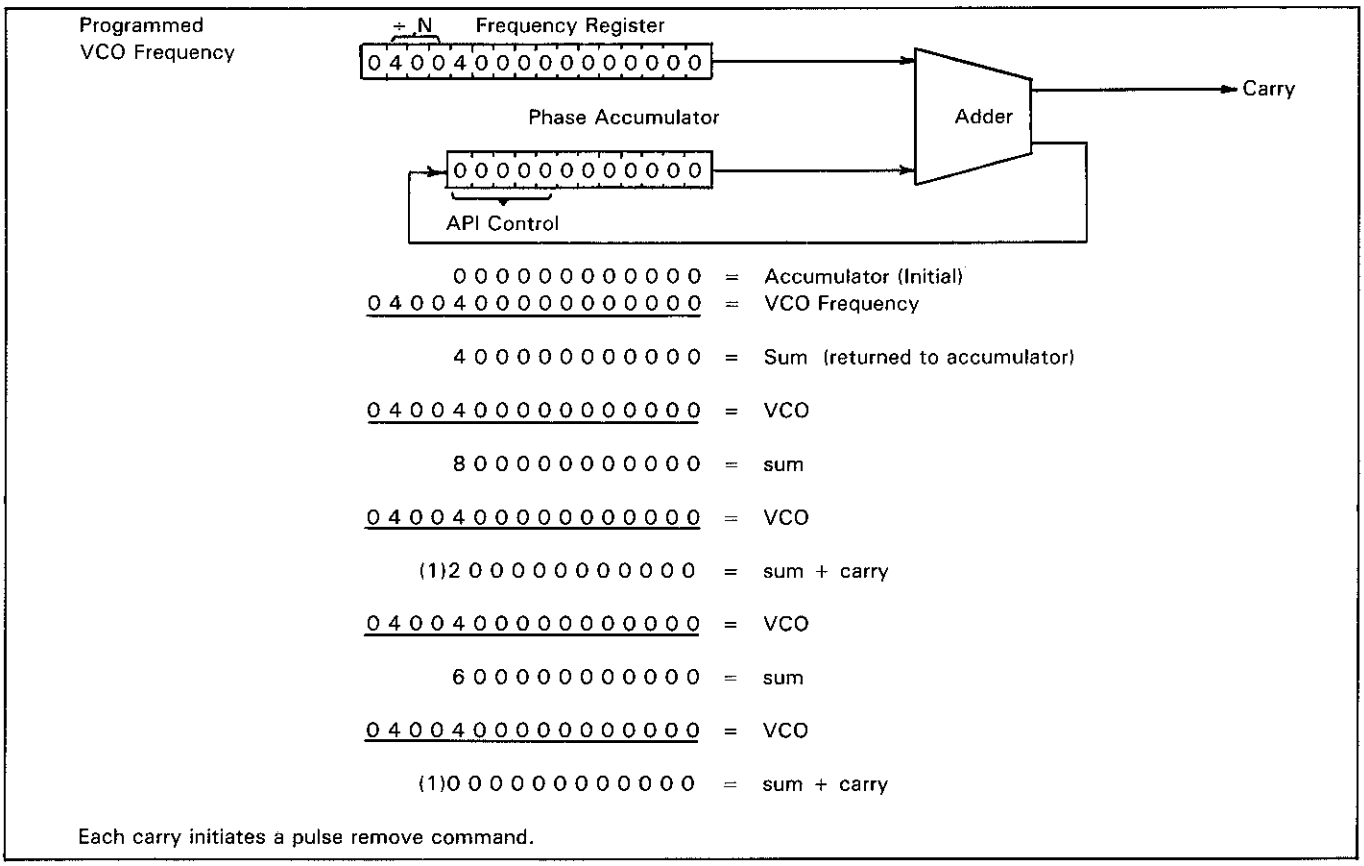

Figure 8-12. Phase Accumulation.

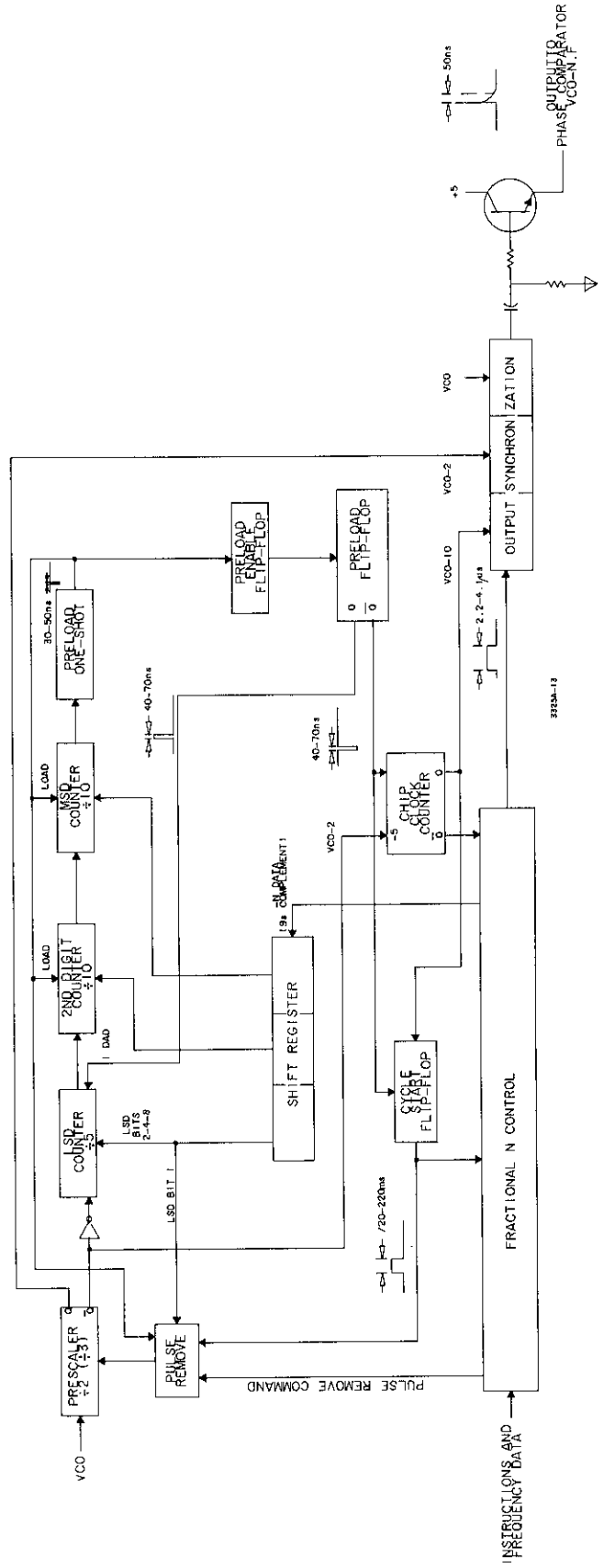

Figure 8-13. Divide by N Counter.

pulse is clocked first by VCO ÷ 10, then VCO ÷ 2, and finally by VCO.

8-40. In example 2, ÷ N is 301, so the counter must count 301 VCO cycles during each reference period. Normally only an even number of cycles could be counted because the least significant digit ÷ 5 counter is counting VCO ÷ 2 from the prescaler. Therefore, in order to count an odd number, the prescaler is forced to count one additional pulse during each reference period. To accomplish this, the pulse remove circuits are enabled when the least significant (BCD) bit of the least significant digit of the preset number is even, as is the case in example 2 (decimal 8 = binary 1000). Then the negative-going pulse from the preload one-shot changes the prescaler to ÷ 3 for one cycle. The pulse remove action associated with fractional N is independent of and in addition to the odd number count.

8-41. The chip clock counter output (Figure 8-13) is the prescaler output divided by five. The $\overline{Q}$ output from this counter goes to the fractional N control IC and is used to clock data in and out of the four shift registers within the IC. The counter Q output is used in the ÷ N.F counter output synchronization and to clock the cycle start flip-flop.

8-42. The cycle start flip-flop is set by the $\overline{Q}$ output from the preload flip-flop and is cleared by the next trailing edge of the chip clock signal. A cycle start pulse occurs at the time the ÷ N least significant digit is preloaded, which is once every reference period. Cycle start is used to initiate operations within the fractional N control IC. It is also used to set the pulse remove circuit when ÷ N is an odd number.

8-43. Reference Circuits (Service Group G).

8-44. Reference Oscillator. The Reference Oscillator is a 30 MHz crystal-controlled oscillator that can be synchronized to an external reference signal of 10 MHz or subharmonic of 10 MHz (minimum 1 MHz).

8-45. External Reference Phase Lock Loop. Figure 8-14 is a block diagram of the External Reference Phase Lock Loop. The external reference input is sent thorugh a squaring circuit, amplified, and then differentiated to provide a narrow positive pulse to the gate of a FET switch. This turns the switch on momentarily, sampling the instantaneous voltage of the sine wave at the FET switch source. This voltage is stored on the capacitor at the input of a Sample/Hold amplifier. The resulting dc output voltage from the S/H amplifier is applied to a varactor in the 30 MHz oscillator circuit to adjust the oscillator frequency.

8-46. When the 30 MHz oscillator is in phase with the external reference, the FET switch will sample the sine wave at exactly the same point each time and the S/H amplifier output voltage will remain constant. But if there is a change in phase relationship, the amplifier output voltage will change, correcting the oscillator frequency and restoring phase lock.

8-47. External Reference Detector. Whenever an external reference input is present, a detector circuit provides a logical "1" signal to the control circuits. This causes the front panel EXT REF indicator to light.

8-48. Unlock Detector. When the external reference loop is phase locked, the Sample/Hold amplifier output is a steady dc voltage. However, if the loop is not locked, this voltage will vary. The unlock detector is triggered by this varying voltage to provide a logical "1" to the control circuits. During an "unlock" condition, the front panel EXT REF indicator will flash on and off.

8-49. 30 MHz Reference Amplitude. Sine wave output amplitude and amplitude modulation are controlled by varying the amplitude of the 30 MHz Reference. Figure

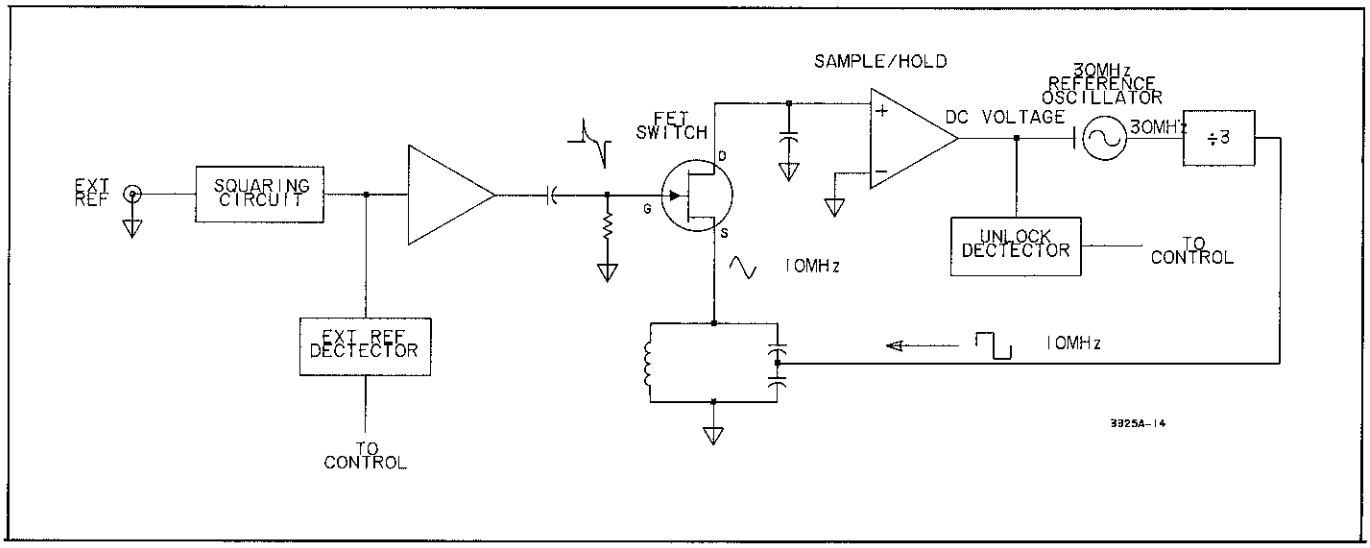

Figure 8-14. External Reference Phase Lock Loop Block Diagram.

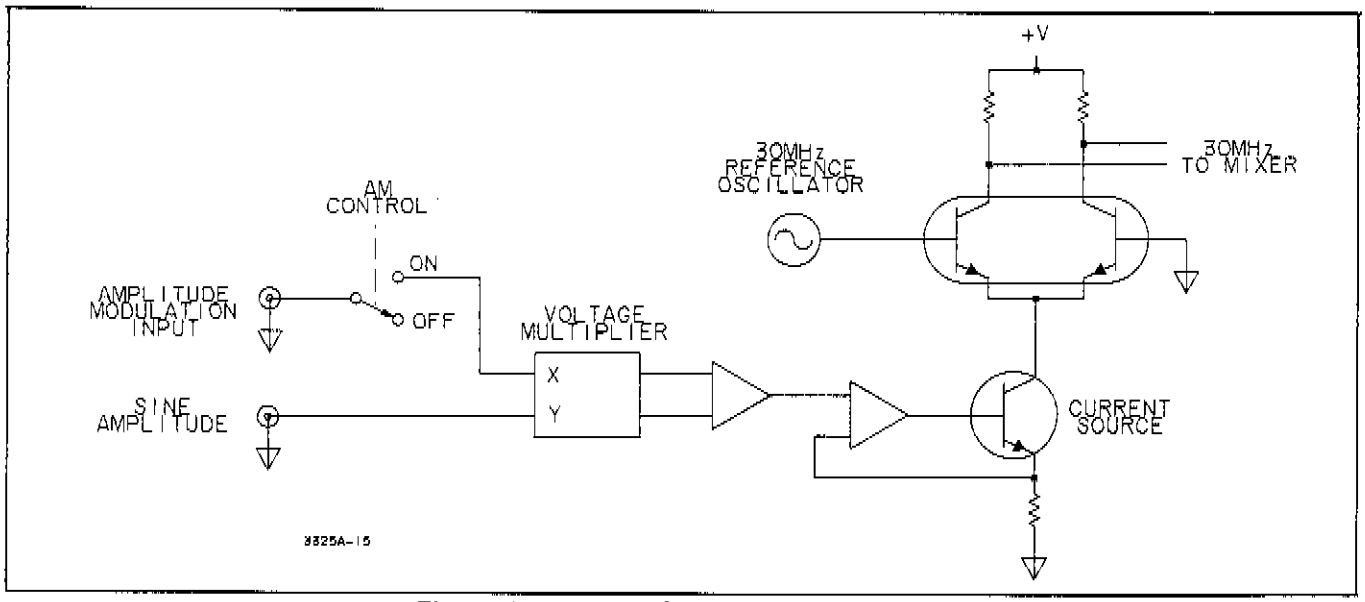

Figure 8-15. Level Control and Amplitude Modulation.

8-15 is a simplified diagram of the level control and amplitude modulation circuits. The reference signal amplitude is varied by controlling the current available from the current source (Figure 8-15), which in turn is controlled by the Sine Amplitude signal and/or the Amplitude Modulation input signal. When the AM Control switch is OFF, the X input to the voltage multiplier is constant, and the output level is controlled by the Sine Amplitude only. When the AM switch is ON, however, both the X and Y inputs influence the output. The output of the multiplier (V_o) is normally equal to .1XY, but because the multiplier output is connected to an operational amplifier input, this voltage cannot be measured. Use of the voltage multiplier in this circuit makes it possible to change the 3325A output (carrier) amplitude without affecting the percent of modulation, or to change the percent of modulation without affecting the carrier level. The output of the Level Control and Amplitude Modulation circuit goes to the Mixer, covered in Service Group H.

8-50. Reference Dividers. The 30 MHz Reference frequency is reduced through a series of dividers to provide the following signals:

10 MHz to the External Reference PLL
2 MHz to the D/A Converter (Service Group I)
1 MHz rear panel reference output
100 kHz reference to the Fractional N Phase Comparator (Service Group F)

For phase stability, the 100 kHz output is clocked first by 10 MHz, then by the 30 MHz reference signal. The 100 kHz signal is then differentiated to provide a narrow pulse to the Fractional N Phase Comparator.

8-51. Mixer (Service Group H).

8-52. The Mixer circuits are diagrammed in Figure 8-16. The 30 MHz reference is passed through a low pass filter and mixed with the 30-50 MHz signal from the VCO in a diode mixing circuit. The mixing circuit output is applied to a low pass filter to remove all but the difference frequency, which is amplified by a current amplifier. This signal then goes to the Function circuits (Paragraph 8-59).

8-53. D/A Converter (Service Group I).

8-54. The Digital-to-Analog (D/A) Converter supplies the analog voltages which control signal amplitude, dc offset, level comparator reference voltage, sweep X drive output, and correct for dc offset error. In addition, it supplies an auto zero voltage to its own current sources.

8-55. Preset Counters. Each of the four Preset Counters is a BCD counter that can be pre-loaded with a 4-digit binary number and then enabled to count from that point. In this application, they are set to count down. The counters are connected in two pairs, as illustrated by the least significant pair in Figure 8-17. Both counters are loaded at the same time, then the Least Significant Digit (LSD) Counter is enabled by the Counter and Current Source Enable Flip-Flop; and at the same time, the LSD Current Source is enabled to supply current to the DAC Integrator (see Figure 8-18). When the LSD Counter reaches zero, its Ripple Clock output enables the 3rd Digit Counter to count one clock pulse. If the preset number in the 3rd Digit Counter was greater than one, the LSD Counter continues to count, supplying an enable pulse to the 3rd Digit Counter each time it reaches zero. When the 3rd Digit Counter reaches zero, its Ripple Clock output changes the state of the Counter and Current Source flip-flop, disabling the LSD Counter and the Current Source.

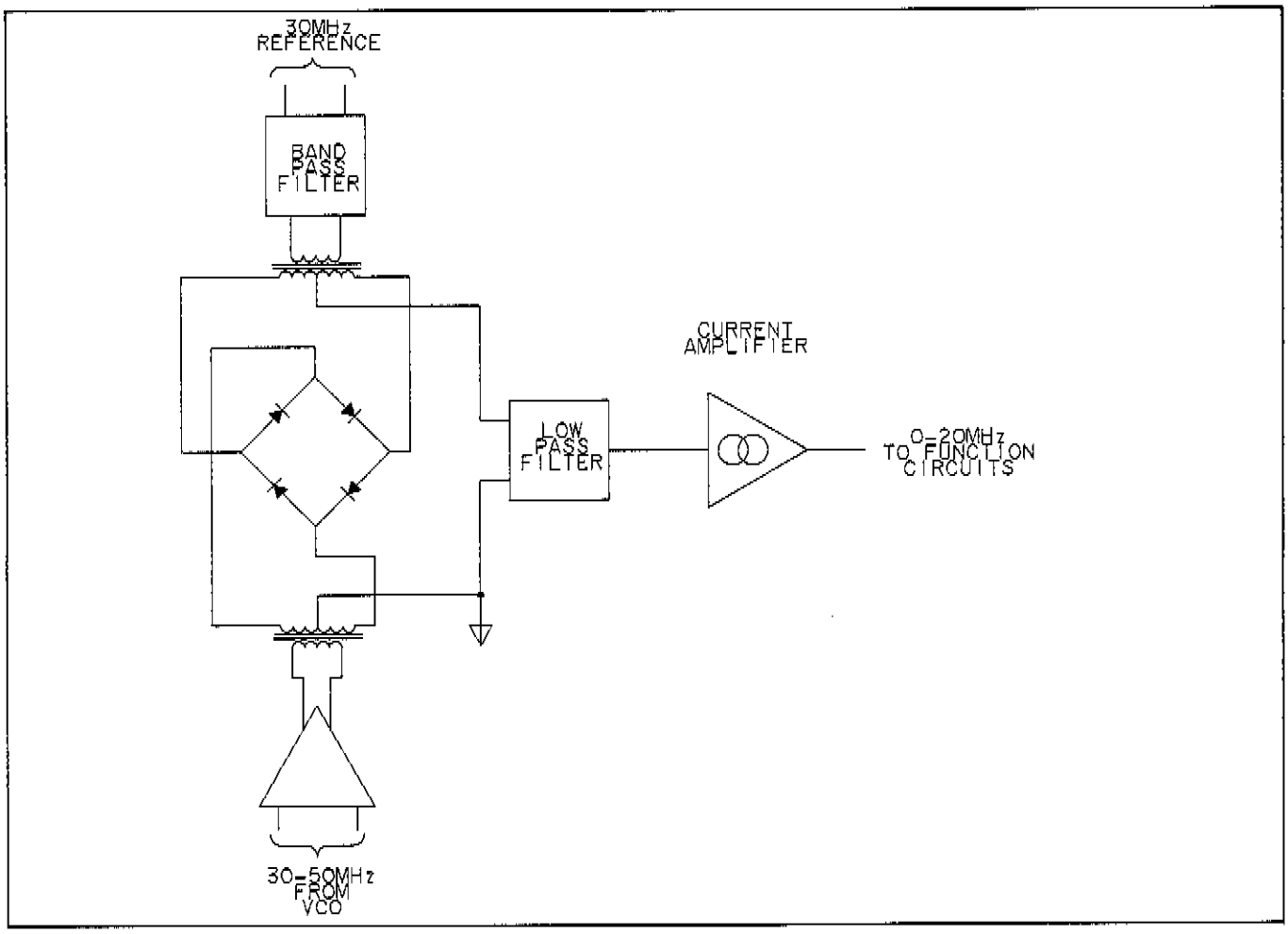

Figure 8-16. Mixer Diagram.

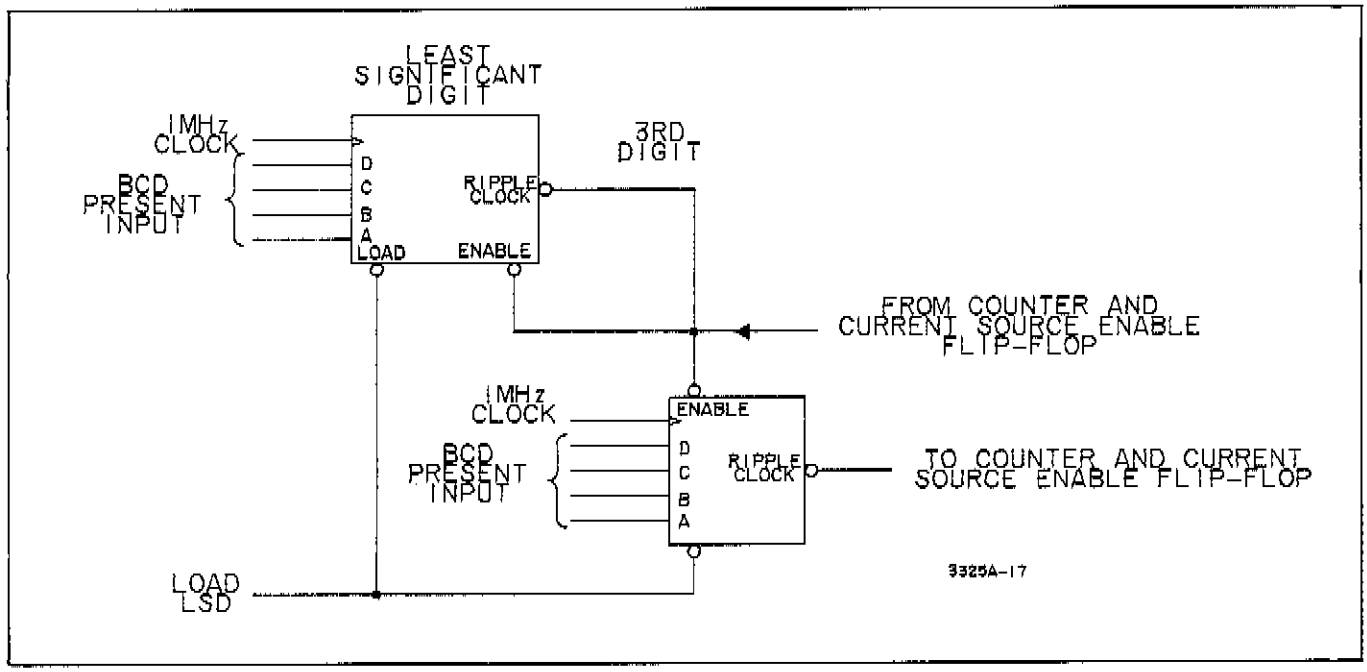

Figure 8-17. Preset Counters.

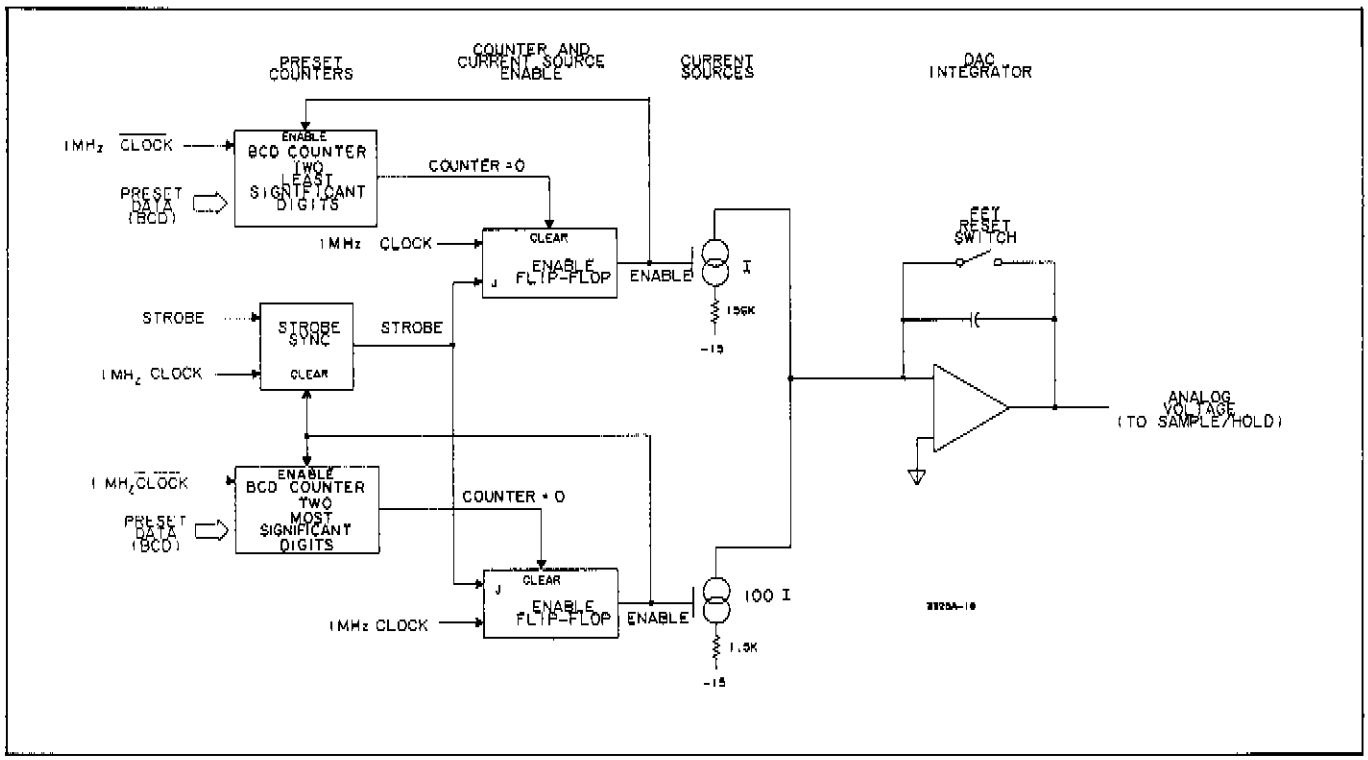

Figure 8-18. D/A Converter.

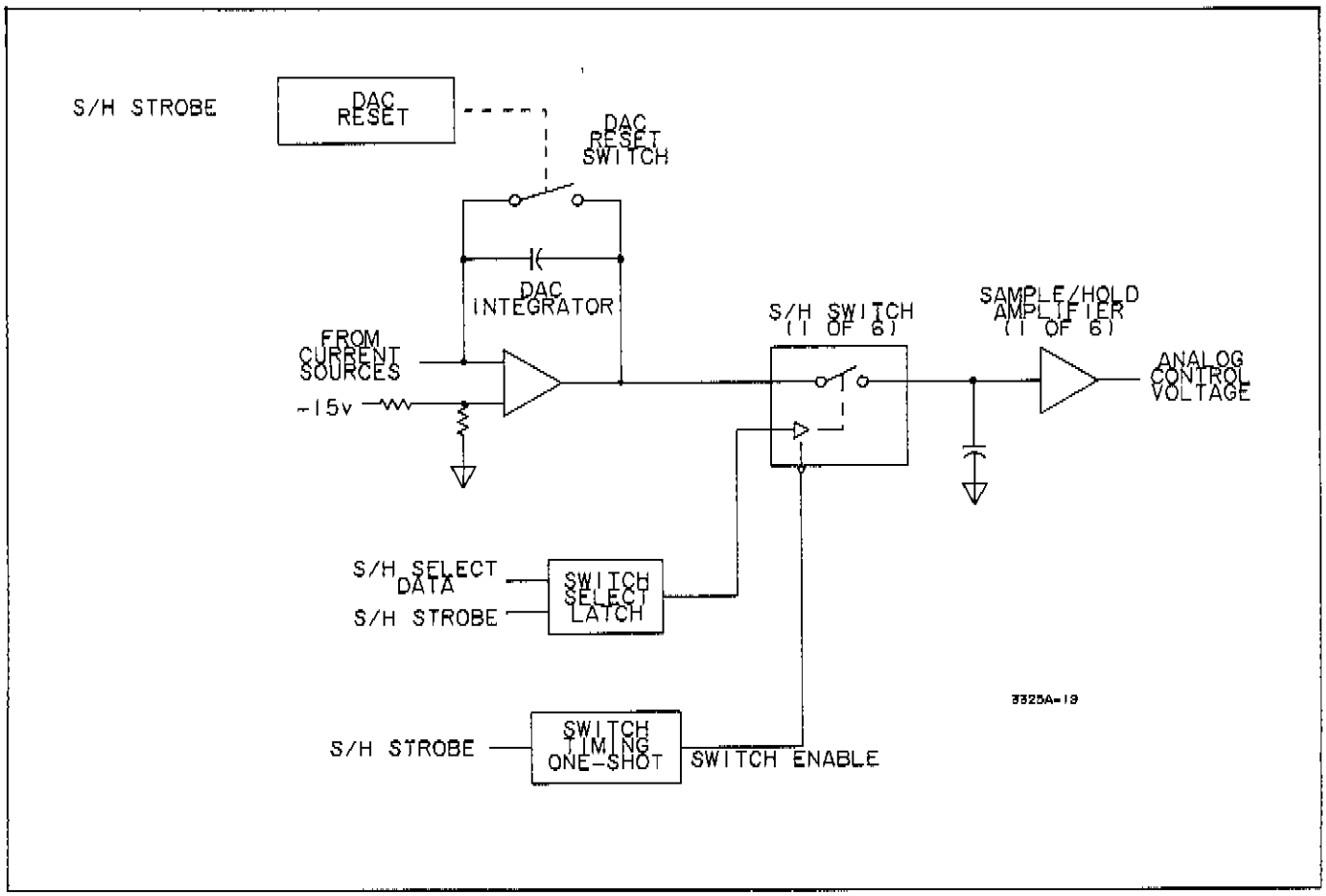

Figure 8-19. DAC Sample/Hold.

8-56. 4-Digit D/A Conversion. A simplified diagram of the D/A Converter is shown in Figure 8-18. The D/A Converter (DAC) Integrator output voltage is proportional to the four digits of BCD information that is loaded into the Preset Counters. The two current sources are enabled to supply constant current to the DAC Integrator for the length of time required for the Preset Counters to count down from the preset number to zero. The current resulting from the two most significant digits is proportionally 100 times that from the two least significant digits. For example, if the 4-digit preset number were 5555, the enable time would be the same for both current sources, but the current ratio would be 100 to 1.

8-57. DAC Sample/Hold Circuits. After the Preset Counters have finished counting and the current sources are disabled, the DAC Integrator output voltage must be transferred to the proper Sample/Hold Amplifier. Figure 8-19 is a simplified diagram of the DAC Sample/Hold circuits. The data that designates one of the six Sample/Hold Amplifiers is clocked into the latch by the S/H Strobe pulse. The S/H Strobe pulse also triggers a switch timing one-shot which enables the switches to close long enough to transfer the DAC Integrator voltage to the capacitor at the input to the S/H Amplifier.

8-58. DAC Reset. After the integrator output voltage has been transferred to the proper Sample/Hold Amplifier, the integrator is reset to zero by closing a FET switch across the integrator capacitor. The closing of this switch is timed by a one-shot which is triggered by the S/H Strobe pulse.

8-59. Function Circuits (Service Group J).

8-60. This section of the instrument provides the proper current to the operational output amplifier for each function. It includes a number of current sources, and the circuits which develop the square wave, triangle, and ramp functions from the sine wave. Function switching is accomplished by the enable signals shown in the block diagram, Figure 8-20.

8-61. Sine Wave. In sine function, the sine wave from the mixer passes through a current amplifier to the output amplifier. Sine wave amplitude is actually controlled in the level control circuit (see Paragraph 8-69), but the level control current is supplied from the amplitude control current source in this section.

8-62. Square Wave. The sine wave input is sent through a squaring circuit and then divided by two to produce the square wave output. Consequently, in the square wave function, the sine wave must be twice the output frequency, and the maximum output frequency is 10 MHz.

8-63. Triangle. To generate a triangle wave, the sine wave input is first put through the squaring circuit, then divided by 20 (÷10 and ÷2). The result is a square wave whose frequency is 1 MHz plus the programmed output frequency. This signal is phase compared to a 1 MHz reference in an exclusive OR gate. Because the output of the gate is high when one and only one input is high, the gate output is a series of pulses whose width varies in proportion to the phase difference between the two gate input signals. Figure 8-21 is a simplified illustration of this. The gate output drives a current amplifier (which inverts the signal) and the resulting current pulse signal is sent through a filter which shapes the triangle.

8-64. The triangle output frequency is the difference between the 1 MHz reference and the input frequency (from the mixer) divided by twenty. Consequently, the input frequency must be 20 MHz + (20 x output). To produce the maximum triangle output frequency of 10 kHz, for example, the input must be 20.2 MHz.

Output frequency	=	10 000 Hz
Reference	=	1 000 000 Hz
		1 010 000 Hz
	×	20
Input frequency	=	20 200 000 Hz

8-65. Positive and Negative Ramp. A ramp output is generated in the same manner as the triangle, except that when the phase difference between the 1 MHz reference and the input ÷20 has advanced 180°, the reference is inverted by the ramp reset circuits (Figure 8-20). Figure 8-22 illustrates the ramp generation process. Because the phase difference is allowed to advance only 180° instead of 360° as in triangle generation, the frequency of the "input ÷20" signal to the phase comparison gate must be 1 MHz plus one-half the output frequency. For the maximum ramp output frequency of 10 kHz:

Output frequency	=	10 000 Hz
÷2	=	5 000 Hz
Reference	=	1 000 000 Hz
		1 005 000 Hz
	×	20
Input frequency	=	20 100 000 Hz

8-66. Ramp reset may be initiated either by the phase detector output (Figure 8-20) or by a + or - ramp reset signal from peak detectors at the output amplifier. Each reset pulse causes the reference signal to be inverted at the output of the ramp reset gate.

Fig 8-20
Sht 1 of 3

FUNCTION	MIXER OUTPUT
SINE	0-30 MHz
SQUARE	0-20 MHz
TRIANGLE	20-20.2 MHz
RAMP	20-20.1 MHz

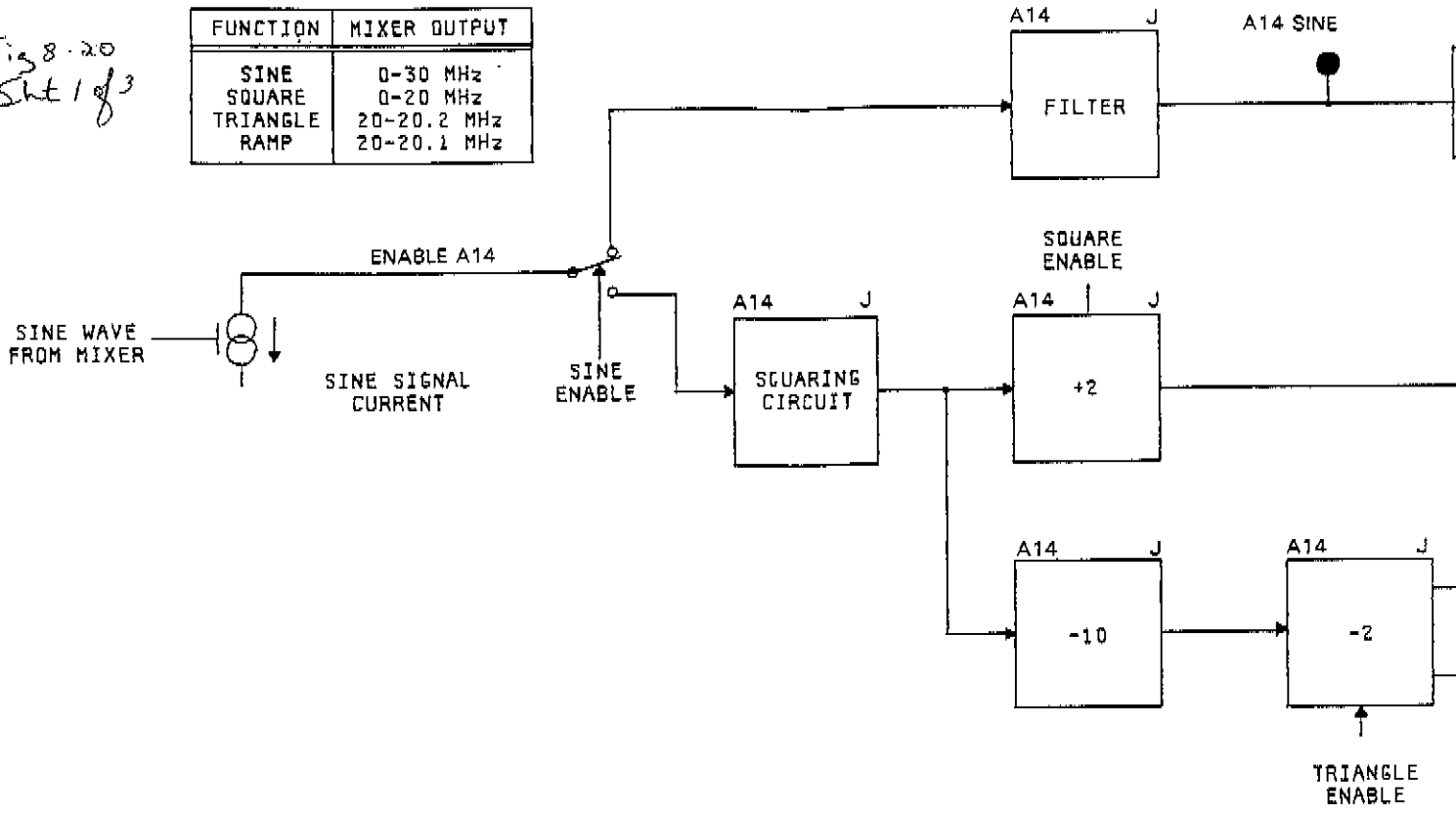

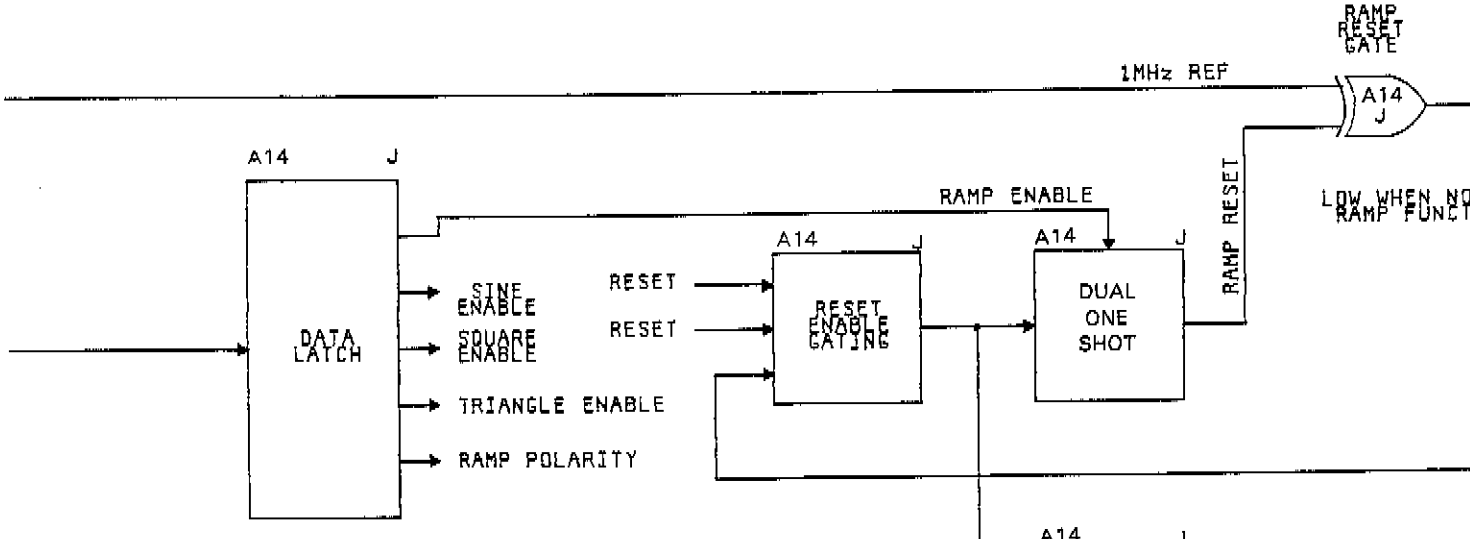

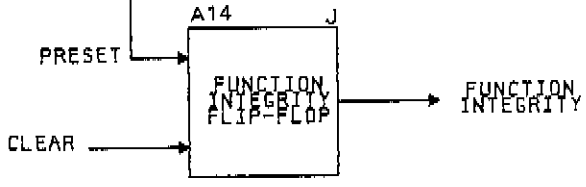

FUNCTION	ENABLE SIGNALS			
	SINE	SQUARE	TRIANGLE	RAMP POL
SINE	H	L	L	L
SQUARE	L	H	L	L
TRIANGLE	L	L	H	L
+RAMP	L	L	H	L
-RAMP	L	L	H	H

Fig 8-20
Sht 2 of 3

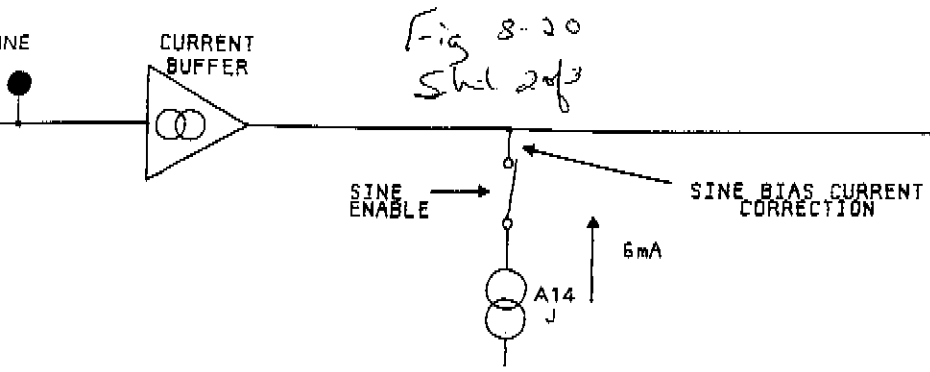

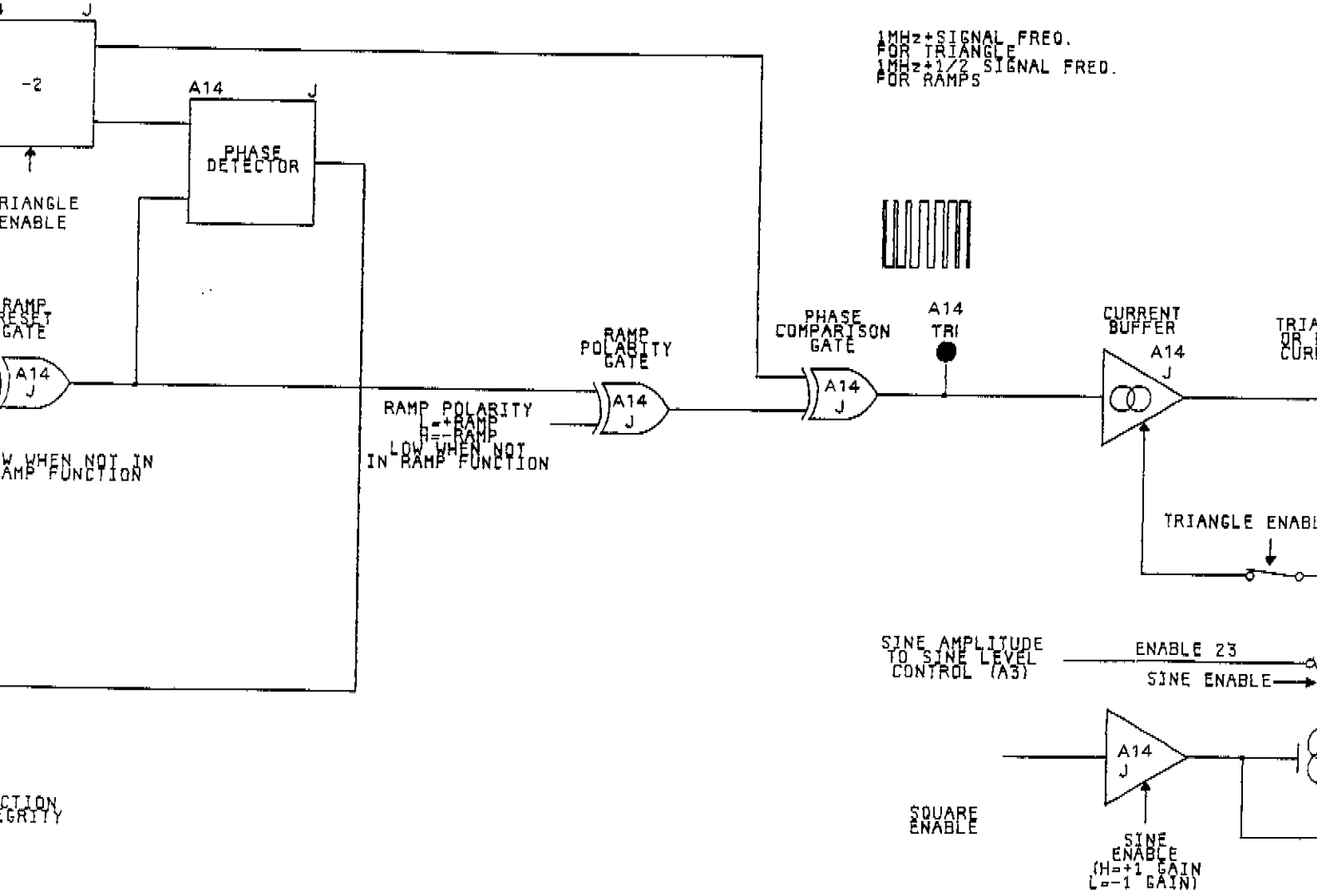

Fig 8-20 sht 3 of 3

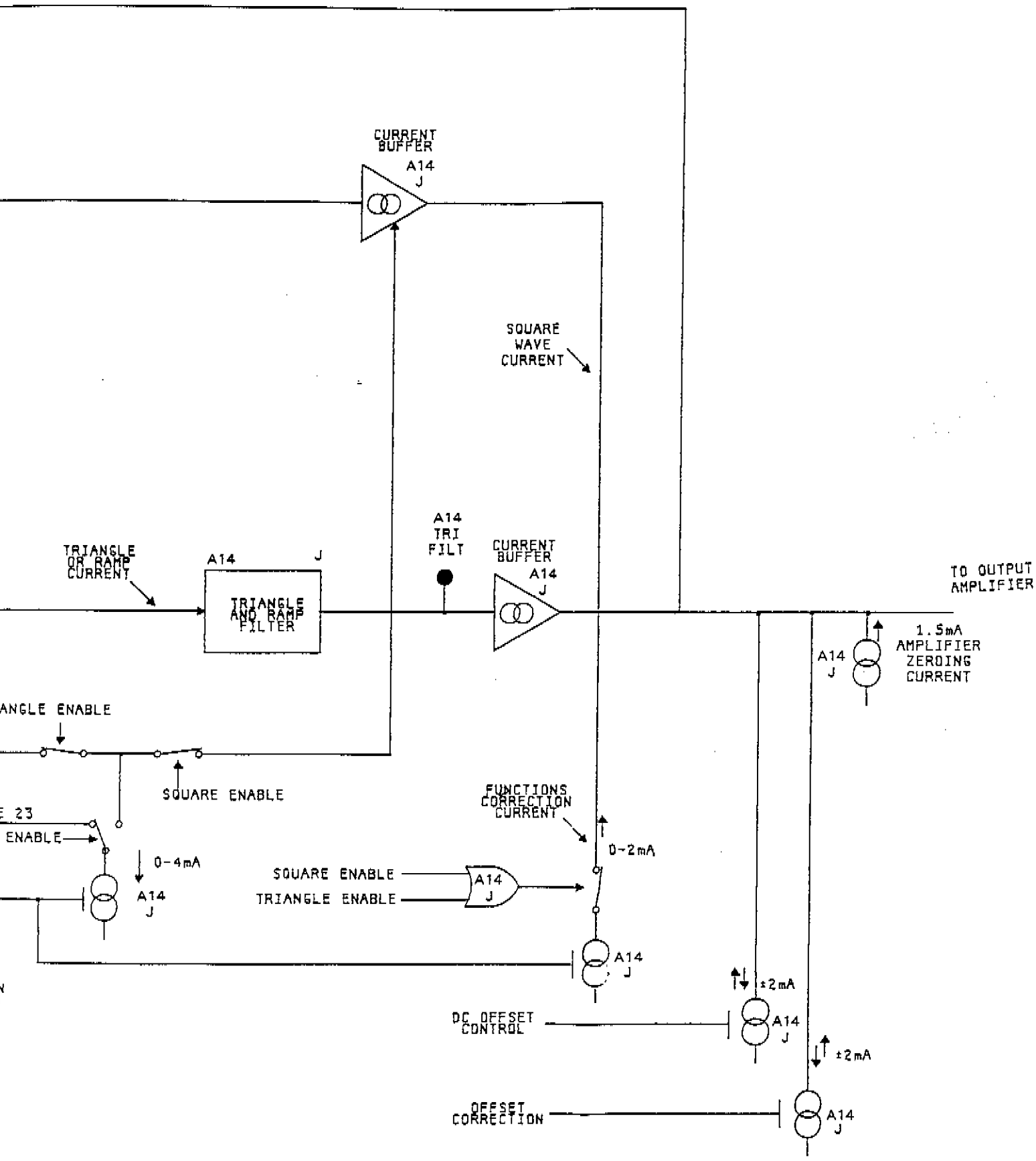

Figure 8-20. Enable Signals for Function Switching

Fig 8-20 Sht 1 of 4

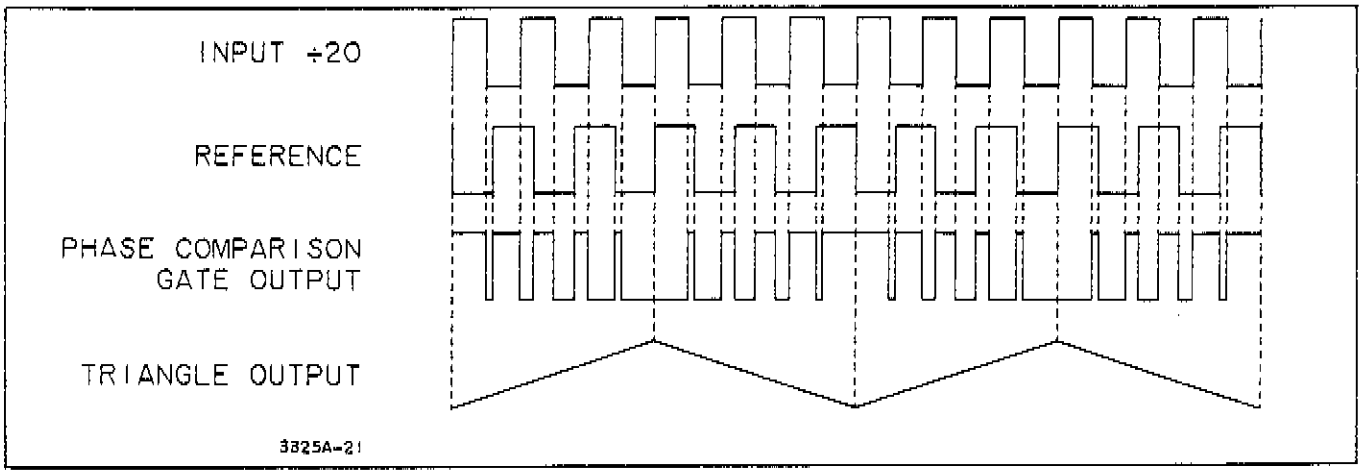

Figure 8-21. Simplified Illustration of Triangle Generation.

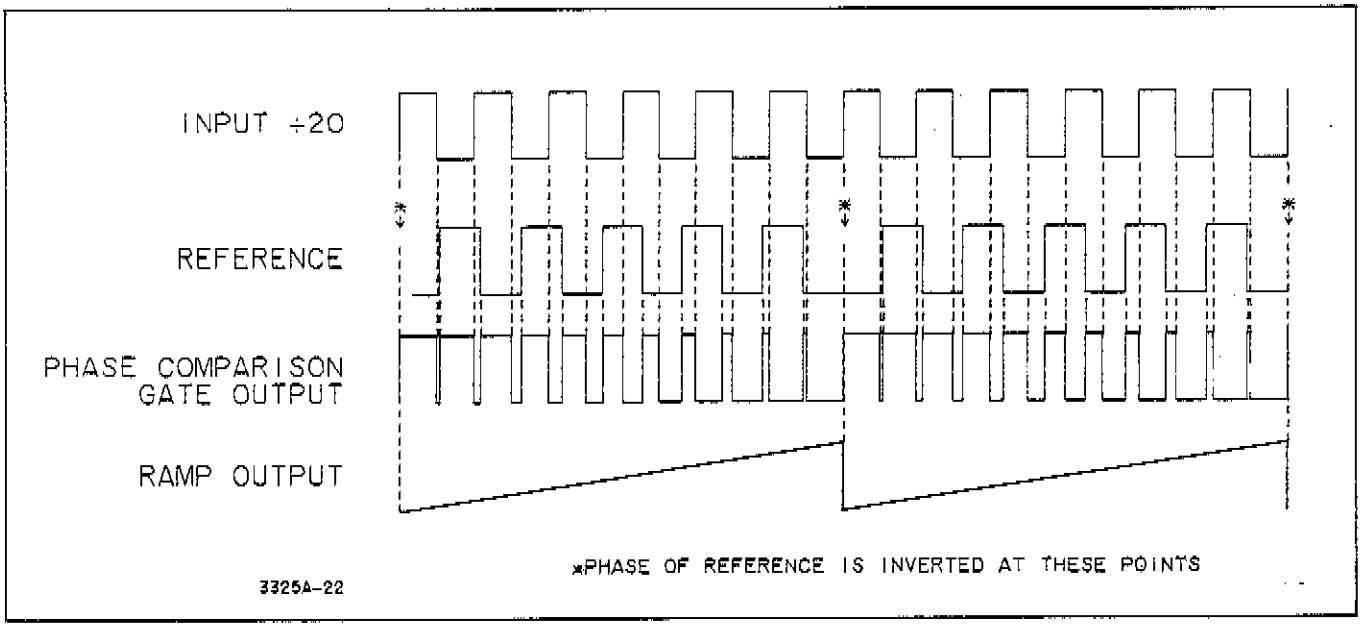

Figure 8-22. Simplified Illustration of Ramp Generation.

8-67. Ramp polarity is determined by the ramp polarity gate. If negative ramp is programmed, the reference signal is inverted by this gate.

8-68. Function Integrity Flag. If the ramp is being reset by the digital Phase Detector, the detector output sets the Function Integrity Flip-Flop, and the Function Integrity Flag (HMD2) to the processor is high. If the ramp is being reset by the analog Level Comparator at the amplifier output (see Paragraph 8-74), the analog reset signal prevents the Function Integrity Flip-Flop from being set. The controller may reset the Function Integrity Flip-Flop. The Function Integrity Flag tells the processor which ramp reset method (analog or digital) is being used. This information is used by the processor in setting the correct reference level for the output Level Comparator. Ramps are reset by the digital Phase Detector at frequencies below 100 Hz, and by the analog output Level Comparator at frequencies of 100 Hz and higher.

8-69. Amplitude and Offset Control. The voltage output of the output amplifier is proportional to the current into its input summing junction. Consequently, signal amplitude can be controlled by varying the amount of current available from the current source which supplies the various functions. The amplitude control signal is a dc analog voltage from a D/A converter (see Paragraph 8-53) which receives its digital input from the controller.

8-70. Because the square wave, triangle, and ramp signals are generated by switching the unipolar amplitude

control current source on and off, the entire signal is above ground. These signals are centered about ground by a compensating current equal to one-half the signal amplitude. This current is shown as "amplitude ÷ 2 correction current" in Figure 8-20.

8-71. Positive or negative dc offset can be programmed either with or without an ac signal. The offset current source is also controlled by a dc analog voltage from the D/A converter. The dc offset correction current source is also controlled by the D/A converter. The offset correction voltage is calculated from the results of the AMPTD CAL routine (see Paragraph 8-74).

8-72. Output Amplifier (Service Group K).

8-73. The Output Amplifier is an inverting operational amplifier that is designed for wide frequency response and low distortion. Its output stage is protected against excessive current by a 0.125 A fuse and against excessive voltage by diodes connected to the + and - 15 V supplies. Output resistance is 50 ohms.

8-74. Level Comparator and AMPTD CAL. During the amplitude calibration process (AMPTD CAL), the Level Comparator is used to determine the offset and signal amplitude errors of the 3325A output. To do this, the processor sets the signal amplitude to zero and varies the voltage of the "Level" input to the comparator to determine the dc offset in the amplifier output. The processor computes the dc offset error and programs an offset correction. The processor then sets the signal amplitude to 8 V p-p (with full attenuation) and proceeds to determine both the positive and negative peak voltages in a similar manner. From this information it computes the gain error, which is used for subsequent amplitude calculations for any range selected. This error information is retained and used by the processor until the next amplitude calibration, which may occur because of the change in the function programmed, or because the operator or HP—IB system controller programmed AMPTD CAL.

8-75. The Level Comparator is also used to reset both the positive and negative-going ramps for frequencies of 100 Hz and higher. The "Level" voltage is set by the processor to the peak ramp voltage programmed. When the ramp and "Level" voltages are equal, a Ramp Reset pulse is generated by a one-shot and used to toggle a Ramp Reset flip-flop (see schematic in Service Group J). The ramp is then reset as explained in Paragraph 8-65. If the "Level" voltage is set incorrectly, the digital phase detector causes the ramp to be reset, and the Function Integrity Flag to the processor to be high (see Paragraph 8-68). The processor then adjusts the "Level" voltage until the Level Comparator output resets the Function Integrity Flag, indicating that the ramp is being reset by the Level Comparator. This ramp "loop level" process is disabled when the frequency is being swept or modulation is enabled.

8-76. Sync Comparator and Driver. The amplifier output waveform is one input to the Sync Comparator and the other input is the DC Offset voltage level. If no dc offset has been programmed, the DC Offset voltage is zero and the comparator output changes at zero volts. This results in a Sync square wave whose transition occurs at zero volts crossing of the output signal. It follows, then, that the Sync signal transition occurs whenever the output signal crosses the DC Offset voltage, when an offset has been programmed. The Sync signal is the passed through inverter circuits to both the front and rear panels.

8-77. Attenuator (Service Group L).

8-78. Relay Drivers. Refer to the schematic diagram in Service Group L. Relay selection data is provided by the lines labeled K0 through K7 and is stored in the D flip-flops of A14U49. This information is obtained from the Machine Data Bus through A14U29 (see Service Group I). Seven of the relay driver circuits are contained in one integrated circuit package, and the eighth is a discrete transistor circuit. Current through the relay coils is limited by the Q77, Q78 circuit. Because latching relays are used, continuous current is not required. Therefore, after a relay has been switched, the driver can be turned off by the K0-K7 information. The D flip-flops are clocked at the proper time by a signal that is also decoded in A14U27 from the Machine Bus data.

8-79. Attenuator Relays and Pads. Relays K1, K2, and K3 control the output signal attenuation. Table 8-1 shows the voltage ranges, both with and without dc offset and the relays and attenuation factors involved. The output relay, K4, switches the output to the front or rear panel in a standard instrument and switches the High Voltage amplifier in or out in Option 002 instruments.

8-80. High Voltage Output Option 002 (Service Group M).

8-81. The High Voltage Output Amplifier is non-inverting and has a gain of two. It is designed for operation over a bandwidth of 0 to 1 MHz. The output is current-protected by a 0.25 A fuse, and voltage-protected by diodes to the + and - 30 V supplies. Output resistance is essentially zero. Plus and minus 30 V regulators which supply power for this amplifier are a part of the option. Input power for these supplies is provided from a separate winding on the instrument power transformer; consequently, these supplies are on at any time ac power is connected to the instrument.

8-82. Sweep Drive Circuits (Service Group N).

8-83. The Sweep Drive Circuits provide three output signals that can be used in oscilloscope, plotter, and similar applications: Z Blank, Marker, and X Drive.

8-84. Z Blank. The Z Blank output voltage levels are TTL compatible. This signal goes low at the start of a

Table 8-1. Attenuation and Voltage Ranges.

Range	Attenuation Factor	Attenuator Relay In	Amplitude (Peak-to-Peak, 50 Ω)		Maximum Offset (+ or −)	Minimum Offset (+ or −)	DC Only (+ or −)
			AC Only (No Offset)	AC (With Offset)			
1	1	None	10.00 V to 3.000 V	9.998 V to 1.000 V	0.001 V to 4.500 V	1.000 mV	4.500 V to 1.500 V
2	3	K3	2.999 V to 1.000 V	999.9 mV to 333.4 mV	1.166 V to 1.499 V	0.100 mV	1.499 V to 0.500 V
3	10	K2	999.9 mV to 300.0 mV	333.3 mV to 100.0 mV	333.3 mV to 450.0 mV	0.100 mV	499.9 mV to 150.0 mV
4	30	K2, K3	299.9 mV to 100.0 mV	99.99 mV to 33.34 mV	116.6 mV to 149.9 mV	0.010 mV	149.9 mV to 50.00 mV
5	100	K1	99.99 mV to 30.00 mV	33.33 mV to 10.00 mV	33.33 mV to 45.00 mV	0.010 mV	49.99 mV to 15.00 mV
6	300	K1, K3	29.99 mV to 10.00 mV	9.999 mV to 3.334 mV	11.66 mV to 14.99 mV	0.001 mV	14.99 mV to 5.000 mV
7	1000	K1, K2	9.999 mV to 3.000 mV	3.333 mV to 1.000 mV	3.333 mV to 4.500 mV	0.001 mV	4.999 mV to 1.500 mV
8	3000	K1,K2,K3	2.999 mV to 1.000 mV				1.499 mV to 0.001 mV

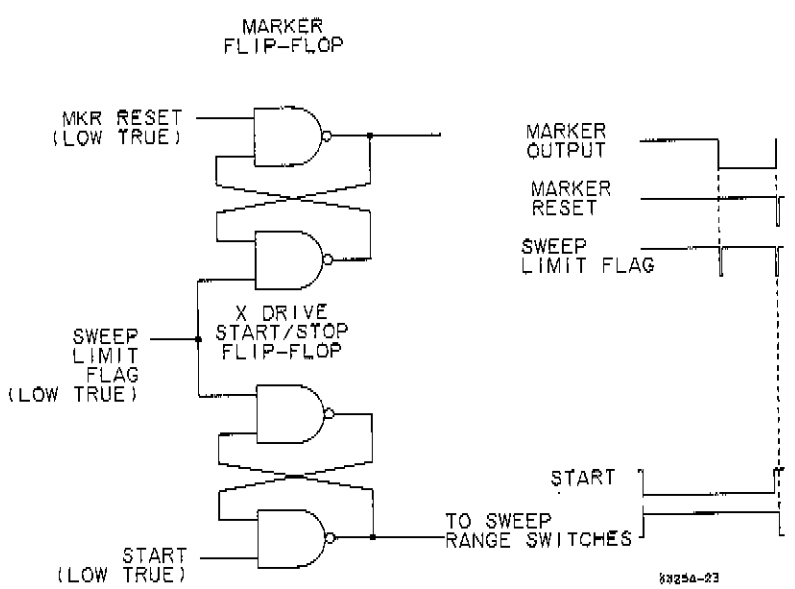

Figure 8-23. Marker and X Drive Start-Stop Flip-Flops.

linear or log single sweep, high at the end of the sweep, and remains high until the start of another sweep. For continuous sweep, Z Blank is low during sweep up and high during sweep down. The Z Blank output circuit is capable of sinking current through a relay or other device. The maximum ratings are:

Maximum current sink: 200 mA, fused at .25 A
Allowable voltage range: 0 V to +45 V dc
Maximum power (voltage at output x current): 1 W

8-85. Marker Output. A Marker output pulse occurs only during linear sweep up, either single or continuous sweep. The NAND gate flip-flop that produces this output is shown in Figure 8-23. The output is high at the start of a sweep up, then the Sweep Limit Flag input goes low at the Marker frequency, changing the flip-flop output to low. Immediately following a sweep up, the Marker Reset input goes low, resetting the flip-flop output to high.

8-86. X Drive. The output of the X Drive Start/Stop flip-flop (Figure 8-24) is set high by the low true Start signal and is returned to low by the Sweep Limit Flag pulse that occurs at the end of the sweep. The Start signal remains low until just before the end of sweep to prevent the Sweep Limit Flag pulse that sets the Marker flip-flop from also changing the X Drive flip-flop. The marker frequency and stop frequency points must be separated by approximately 400 microseconds to allow time between the two Sweep Limit Flags for the control circuits and Fractional N IC to return the Start signal to high and process the information for the stop frequency.

8-87. The high output from the Start/Stop flip-flop is used to turn on one of two analog switches, depending upon which Range signal is high. Range 1 is high for sweep times of 0.01 second to 0.999 second, and Range 2 is high for times of 1 second to 99.99 seconds. As illustrated in Figure 8-24, each analog switch turns on a switch for the duration of the sweep, providing current to an integrator whose output is the X Drive ramp. The value of the current to the integrator depends upon the X Drive analog voltage and the resistance in the integrator input circuit. The resistances are fixed at 10 kilohms for Range 1 and 1 megohm for Range 2. The value of the X Drive voltage is supplied from the D/A Converter and Sample/Hold circuits (see Paragraph 8-53) and is calculated by the control circuits to provide the proper current to increase the X Drive Output Ramp from 0 V to +10 V during the sweep time selected.

8-88. Following a single sweep, the X Drive ramp remains essentially at +10 V until reset prior to the start of another sweep. (This voltage will drift downward less than 10 mV/sec.) During continuous sweep, the ramp is reset at the start of sweep down. The reset switch is a FET connected across the integrator capacitor. The Ramp Reset pulse is initiated at the proper time by the control circuits.

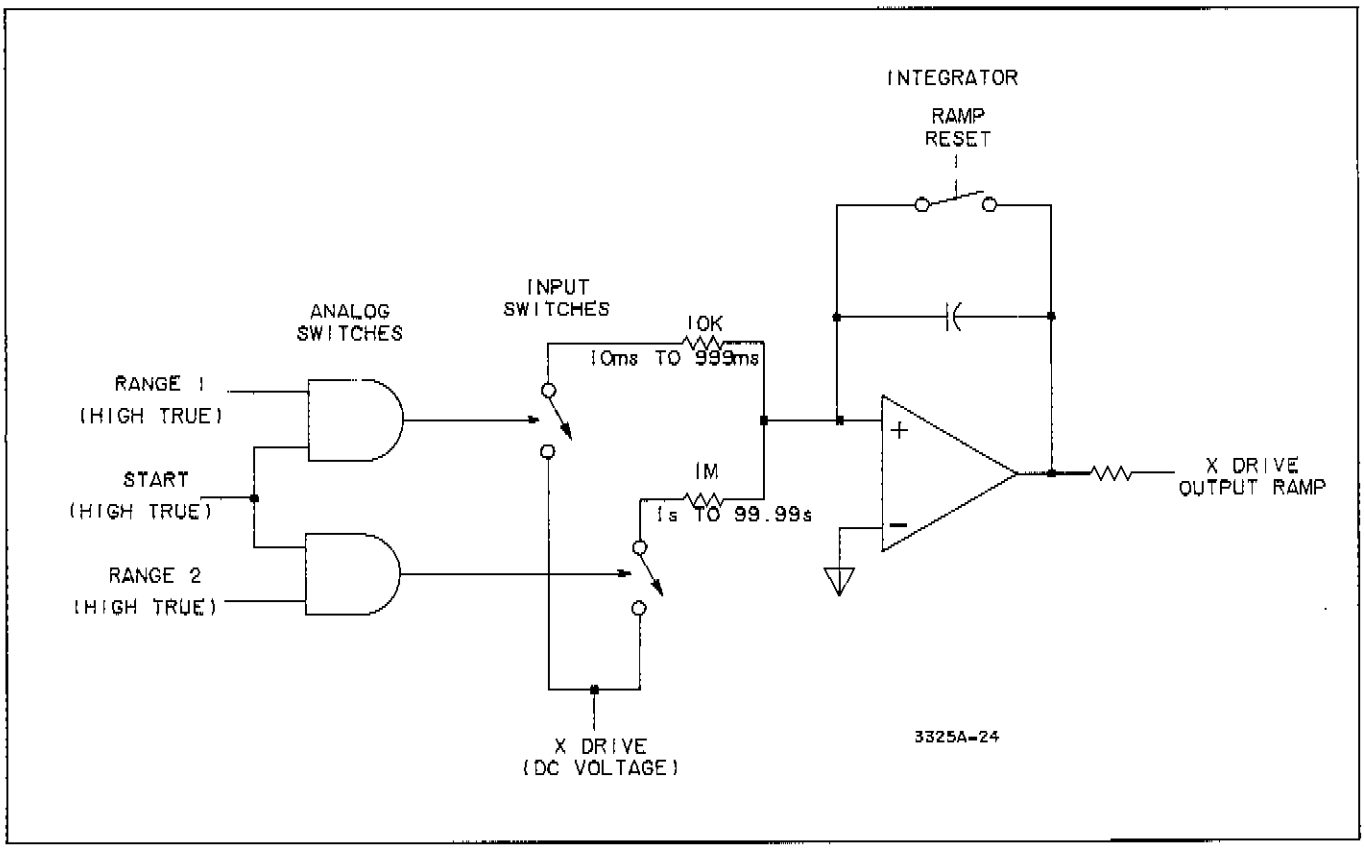

Figure 8-24. X Drive Ramp Output.

8-89. Crystal Oven Option 001 (Service Group M).

8-90. AC power for the Crystal Oven is supplied by a separate winding on the instrument power transformer. Consequently, power is supplied to this assembly at any time ac power is applied to the instrument. A +15 V regulator provides dc power to the Crystal Oven. The oven output frequency is 10 MHz. It is capacitively coupled to the rear panel output connector.

8-91. Power Supplies (Service Group O).

8-92. All three regulators, +5V, +15V, and -15V (shown in the schematic diagram in Service Group 0) are voltage and current controlled. Each regulator has a voltage sense connection. If the voltage at the load is too low, for example, this sense voltage feedback causes the regulator to adjust its output to the correct voltage. If the output current increases excessively (because of a short circuit, for example) the voltage drop across the current sensing resistance causes the active device in the current sensing circuit to limit the current through the series pass regulator.

8-93. When the front panel POWER switch is in the STBY (standby) position, the three main power supply regulators are disabled. However, power is still applied to the HP-IB input/output circuits, the Oven Assembly (Option 001), and the High Voltage Output Amplifier (Option 002). These circuits have their own regulators, which are active at any time ac power is connected to the instrument.

8-94. When the POWER switch is in the STBY position, as shown in the simplified schematic of Figure 8-25, a positive voltage is applied through K1 relay coil to the emitter of Q11, biasing this transistor into conduction. The current is limited by resistors R30 and R32 so that the relay is not activated. Q4 is biased on by the current through Q11 to the point where it behaves in the same manner as it would if there was excessive current through the sensing resistor, R4. This causes the series pass regulator, Q2, to be turned off, disabling the -15 V regulator. Because the +5 V and +15 V regulators are referenced to the -15 V supply, they are also disabled.

8-95. When the POWER switch is set to ON, the emitter of Q11 is grounded, turning this transistor off. Consequently it has no effect on the -15 V regulator circuits. Relay K1 is activated, turning on the blower.

8-96. An overvoltage protection circuit in the +5V supply prevents the voltage from becoming high enough to damage the TTL devices in the instrument. This circuit consists of an SCR (A2CR10) which is triggered if the voltage across A2R14 becomes too great. (Refer to the Power Supply schematic, Service Group O.) When the SCR is triggered, it becomes a short circuit between the unregulated +5V and ground. The result is that the +5V regulator is disabled and the power input fuse, F1, will be destroyed.

8-97. The only voltage adjustment is A2R22 in the -15 V regulator. This control adjusts the +5 V and +15 V outputs also because they are referenced to the -15 V supply.

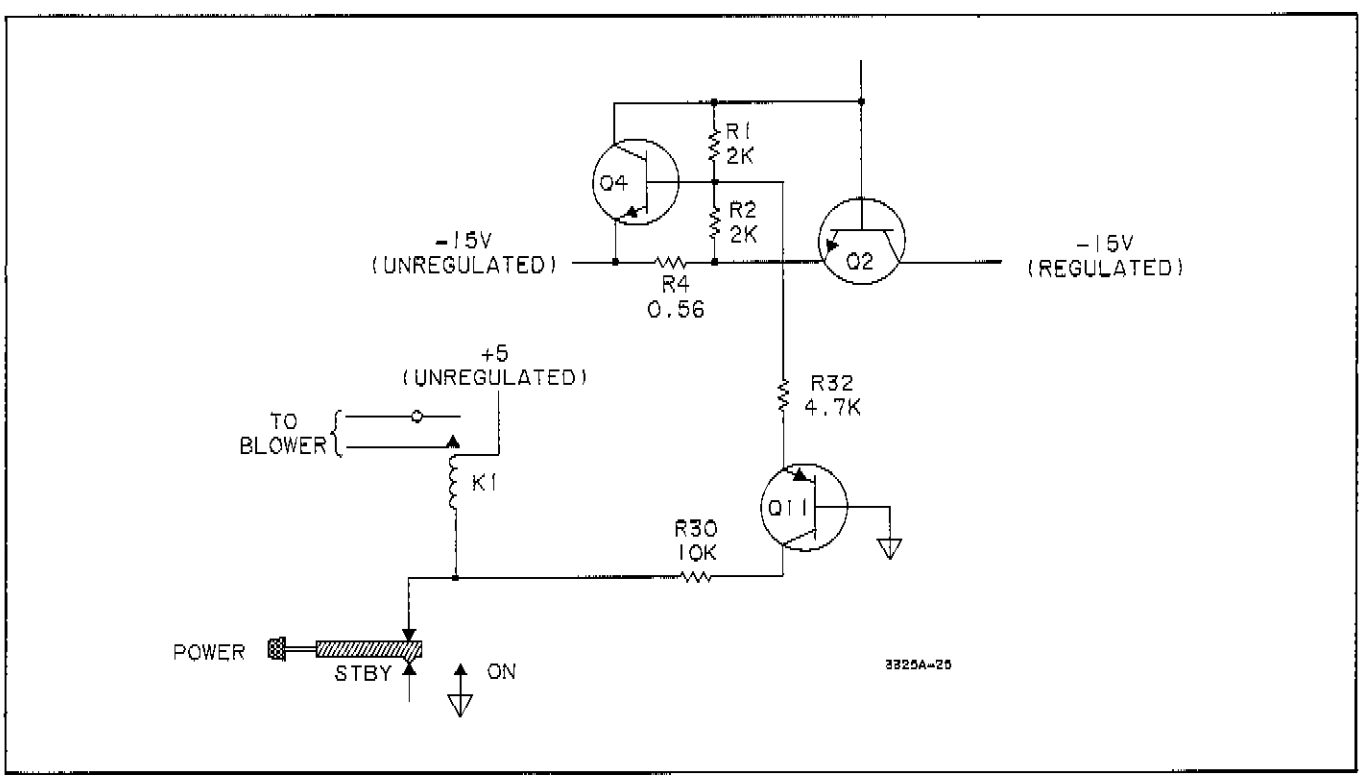

Figure 8-25. Power Supply Standby/On Circuit.

8-98. SINE AMPLITUDE CONTROL PATH.

8-99. Amplitude Control Circuitry.

8-100. The control of sine output amplitude involves a large amount of circuitry. The circuitry used is shown in Figure 8-26. Each block in this figure indicates the circuit board and schematic appropriate to that function. The process begins with the processor loading a number into the preset counters. For the length of time that it takes for these counters to count to zero, a current source is on and is charging up an integrator in the DAC. When the current source turns off, the integrator voltage is sampled and held. This D.C. voltage goes through a gain stage and a multiplier chip and establishes the bias on the 30MHz switch. This controls the level of the 30MHz reference signal to the mixer. From the mixer, a 0-20MHz signal is supplied to the function circuits, the output amplifier, the attenuator, and on to the instrument output. Through all these stages the signal's amplitude is controlled by the D.C. voltage to the 30MHz switch.

8-101. As seen in Figure 8-26, there exists a feedback path through the processor. Using a peak detector, the processor is able to sample the D.C. offsets and amplitude of the signal at the output of the Output Amplifier and compensate for errors by loading adjusted numbers into the Preset Counters.

8-102. Auto Calibration Disable (ACD).

8-103. *When servicing the amplitude control path, it is imperative that the feedback path be eliminated before troubleshooting begins.* This is performed by tying the ACD test point (on A14) to ground. This breaks the loop by preventing the processor from performing subsequent Auto Calibrations. *After tying ACD to ground, cycle power off, then on,* to erase from RAM all previous Auto Cal information.

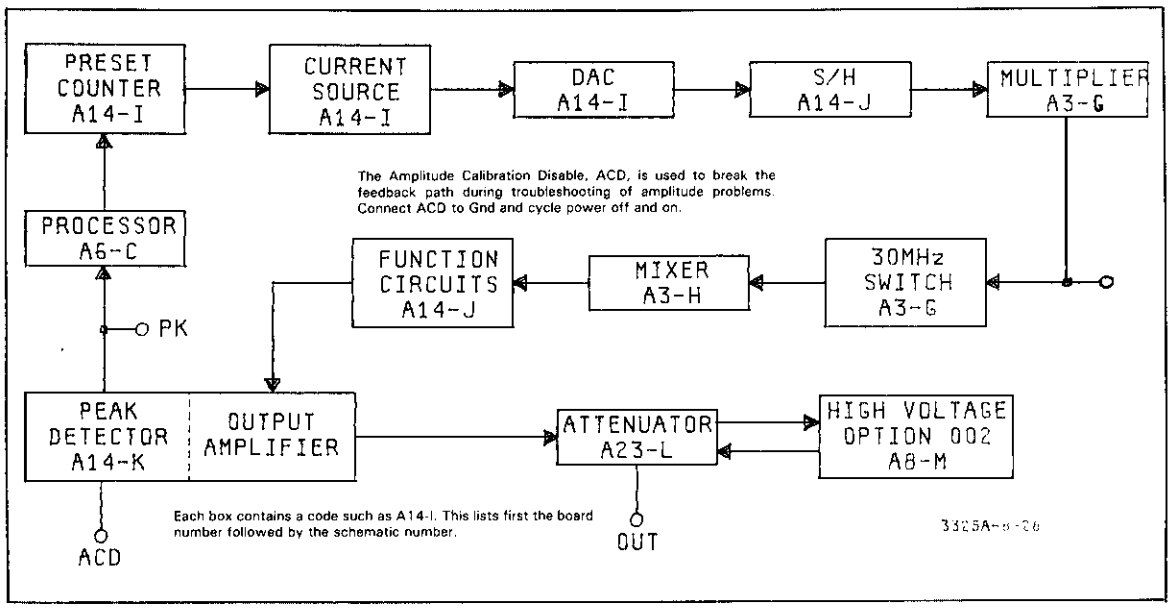

Figure 8-26. Sine Amplitude Control Path.

8-104. SERVICING INFORMATION.

8-105. Power Line Voltage Selection.

8-106. Instructions for setting your instrument to the proper power line voltage are contained in Paragraph 2-8 and Figure 2-1.

8-107. Fan Filter.

8-108. The fan filter must be inspected frequently and cleaned or replaced as necessary to permit the free flow of air through the instrument. To clean the filter, remove the four nuts that secure the filter retainer, remove the filter and flush with soapy water, rinse clean, and air dry.

8-109. Adapter Cable.

8-110. An adapter cable may be made as shown in Figure 8-27 that will aid in adjusting and troubleshooting the instrument. This cable has a phone plug at one end to connect to the phono jacks used as signal connectors on the printed circuit board. The BNC connector at the other end connects to the input of an oscilloscope or other test equipment.

8-111. Access to Reverse Side of A21, A3, A14, and A6.

8-112. The square slotted fasteners used to secure one edge of printed circuit assemblies A21, A3, A14, and A6 can be used to support the board in a vertical position,

Table 8-2. Assembly/Cable Compatibility for Serial Numbers 1748A04250 and Below.

Assembly To Be Replaced	Affected Destination Assembly(ies)	Cable/ Connector	Part Numbers For Destination Assy Modification
A6 03325-66506	A3 * All Rev A and Rev B Boards	W33/A3J1	8120-3108 (Cbl)** 1251-6567 (Conn)
	A14 (A4) * All A4 Revisions and A14 Rev A	W32/A14J1	8120-3108 (Cbl)** 1251-6567 (Conn)
	A21 (A1) * All A1 Revisions and A21 Rev A	W31/A21J1	8120-3108 (Cbl)** 1251-6567 (Conn)
A14 (A4) 03325-66514(04)	A6 * All Rev A, Rev B and some Rev C	W32/A6J2	8120-3108 (Cbl)** 1251-6567 (Conn)
	A23 (A7) * All A7 Revisions and A23 RevA/RevB	W30/A23J30	8120-3216 (Cbl)** 1251-5064 (Conn)
A3 03325-66503	A6 * All Rev A, Rev B and some Rev C	W33/A6J3	8120-3108 (Cbl)** 1251-6567 (Conn)
A21 (A1) 03325-66521(01)	A6 * All Rev A, Rev B and some Rev C	W31/A6J4	8120-3108 (Cbl)** 1251-6567 (Conn)
A23 (A7) 03325-66523(07)	A14 (A4) * All A4 Revisions and A14 Rev A	W30/A14J30	8120-3216 (Cbl)** 1251-5064 (Conn)

** Assemblies ordered for replacement contain the new connectors, however, the newer (gray) cables are not included. They must be ordered separately along with the connectors for the destination assemblies.

Note - Because of the increased reliability, all cables and connectors should be changed regardless of the assembly and destination assemblies involved. Cable and connector replacement is recommended even if board replacement is not required.

Note - If necessary (although not recommended), a newer replacement assembly may be fitted with the older connectors (P/N 1251-4494, 21 pin/ 1251-4390, 14 pin) for use with the older (white) cables (P/N 8120-2577, 5in/8120-2576, 2.3in).

permitting access to both sides of the assembly for servicing. All cables may be left in place and the instrument may be operated with a board in the vertical position. After releasing the printed circuit board by removing all screws, screw the square fasteners back into their threaded standoffs, and insert the edge of the board into the slots in the fasteners, as shown in Figure 8-28(a). The -hp- part number of the fastener is 0570-0621. Newer 3325s may not have these standoffs installed.

CAUTION

Make sure that the fasteners do not contact any circuitry other than the ground plane.

8-113. A6, A14, A3, A21, A23 Connector Compatibility.

8-114. 3325A's with serial number 1748A04250 or below* contain PC assemblies with certain cables and connectors which are not compatible with later revision boards. When replacing A6, A14, A3, A21, or A23 in a 3325A in the range identified above, the connector(s) on the older destination assembly must be changed in order to be compatible with the cables used with the newer boards. For example, if the A6 Controller assembly is replaced in a 3325A containing the older boards and cables (white), connectors A14J1, A3J1, and A21J1 on the destination assemblies must be replaced also. The new connectors which can be mounted in the same holes as the old ones, were implemented because of their greater reliability.

Table 8-2 identifies the assemblies, cables, and connectors affected when board replacement is necessary.

8-115. TROUBLESHOOTING INFORMATION.

8-116. Service information is organized into service groups, which include schematic diagrams, block diagrams and troubleshooting information for specific areas of the instrument. Paragraph 8-2 contains an index of the circuits and the service groups in which they can be found.

8-117. Test Equipment Required.

8-118. Table 8-3 lists the test equipment needed to troubleshoot the 3325A. Any equipment that meets or exceeds the critical specifications may be substituted for the recommended model.

Table 8-3. Test Equipment for Troubleshooting.

Instrument	Critical Specifications	Recommended Model	Use
Signature Analyzer	Signature: 4-digit hexadecimal Characters: 0 thru 9,A,C,F,H,P,U Threshold: Logic 1: +2.2 V Logic 0: +0.5 V Clock Frequency: ≥ 1.5 MHz	-hp- 5004A	Logic Circuit Troubleshooting
Pulse Generator	Pulse Rate: 500 kHz Pulse Width: ≤ 1 μs DC Offset: 1 V	-hp- 3312A	Logic Circuit Troubleshooting
Digital Multimeter 4 Digit	DC Function Ranges: .1 to 100 V Accuracy: ±0.2% AC Function Ranges: .1 to 100 V Accuracy: ±0.5% Ohmmeter Ranges: 100 Ω to 1 MΩ Accuracy: ±1%	-hp- 3466A	General Troubleshooting
Oscilloscope 2 channel	Vertical Bandwidth: dc to 100 MHz Deflection: 5 mV to 10 V/div Horzontal Main Sweep: 50 ns to 2 s/div Delayed Sweep: 50 ns to 20 ms/div	-hp- 1740A	General Troubleshooting
Electronic Counter	Frequency Measurement: to 20 MHz Accuracy: ± 2 counts Resolution: 8 digits	-hp- 5328A	÷ N Counter Troubleshooting

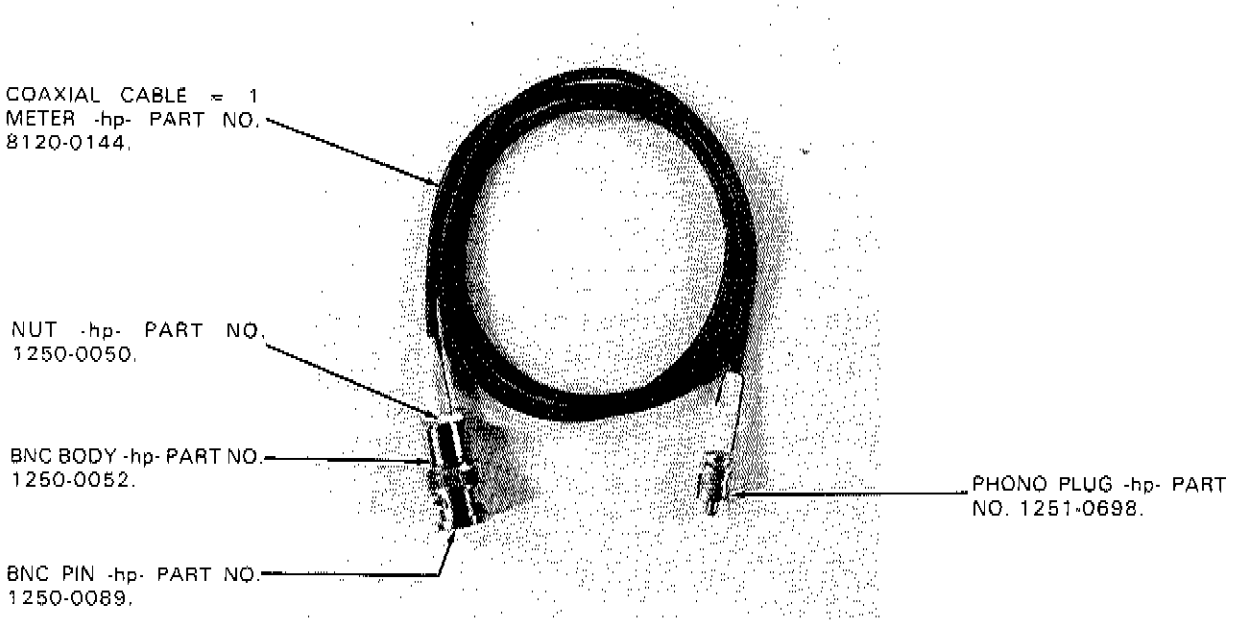

Figure 8-27. Adapter Cable.

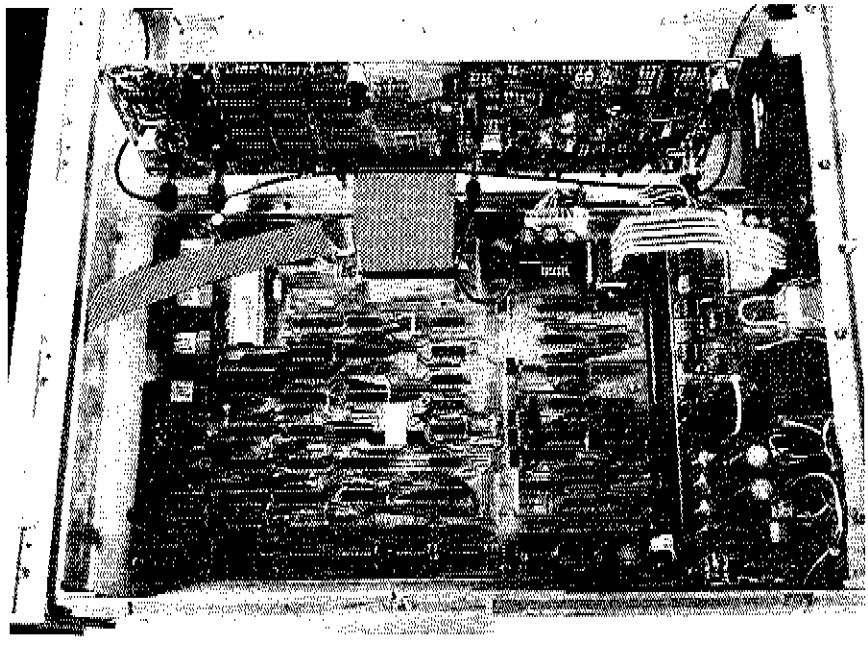

Figure 8-28(a). Access to Reverse Side of Assemblies.

8-119. Adjustments Required After Repair.

8-120. Following repair of some circuits, certain adjustment procedures must be performed to assure proper operation of the instrument. These adjustments are shown in Table 8-4.

8-121. Basic Troubleshooting Procedures.

8-122. Make sure all cables and connectors are firmly seated and that the flat cables from A6 to A21, A3, and A14 are properly aligned in their connectors. Look for burned or loose components. Also make sure the microcircuit packages that are mounted in sockets are firmly seated.

8-123. The flowchart of Figure 8-28(b) may be used to help isolate the trouble. Some symptoms that are identifiable from the display, outputs, or response to inputs or entries are given in Table 8-5, along with suggested areas to begin troubleshooting.

8-124. Orientation Of Components.

8-125. A square pad is used on the printed circuit board to aid in orientation of certain components for replacement and in identification of connections.

Component	Square Pad Identifies
Integrated Circuit	Pin 1
Transistor	Emitter
FET Transistor	Source
Diode	Cathode
Electrolytic Capacitor	Positive Connection

8-126. Mnemonic Dictionary.

8-127. Most of the logic and data signals in the 3325A are identified on the schematic diagrams by a mnemonic, which is essentially an abbreviation of the signal name. Table 8-6 is a dictionary of the mnemonics used in the 3325A.

8-128. Logic Troubleshooting by Signature Analysis.

8-129. Because of the increased complexity of the logic circuits used to control many instruments, malfunctions in these circuits are very difficult to locate. The concept of Signature Analysis is based on the fact that at a particular point in a circuit, the data pulses are predictable under specifically programmed conditions. An instrument such as the -hp- 5004A Signature Analyzer compresses the data at a given point during a controlled time span (window) and displays the resulting four-character signature. This signature indicates whether the correct data was present at the measurement point, and this information can be used to locate a defective component. The signature analysis method is used to troubleshoot the 3325A logic in Service Groups A, B, and C.

8-130. The flowchart of Figure 8-28(b) and the symptoms listed in Table 8-5 may direct you to a Signature Analysis Test in Service Group A, B, or C. Basically, the various tests apply to the following circuits:

Table 8-4. Adjustments Required After Repair.

Circuit Repaired	Service Group	Adjustments Required	Para. No.
Keyboard	A	None	
HP-IB	B	None	
Control	C	None	
Voltage Controlled Oscillator	D	VCO Frequency	5-9
VCO Buffer	D	None	
÷ N.F Counter	E	None	
Fractional N Analog	F	Analog Phase Interpolation	5-10
30 MHz Oscillator	G	30 MHz Reference Oscillator	5-11
Sine Amplitude & Amplitude Mod.	G	Amplitude Gain	5-13
Mixer	H	Mixer Spurs	5-18
D/A Converter and Sample/Hold	I	D/A Converter Offset	5-8
Ramp Gating Circuits	J	Ramp Stability	5-16
Output Amplifier	K	Amplifier Bias	5-15
		Amplitude Flatness	5-17
Sweep Range Circuits	L	X Drive	5-14
X Drive Integrator	N	X Drive	5-14
High Stability Reference	M	High Stability Reference	5-12
Power Supply	O	Power Supply	5-7
		D/A Converter Offset	5-8

Test	Service Page	Circuits Tested
ROM	8-C-2	ROM's (A6U1-4), Processor (A6U9), and Buffer (A6U10). Unless these circuits are operating properly, none of the other tests will work.
Ø	8-C-6	This test is a point-by-point signature analysis of all IC's on the A6 assembly.
1	8-C-15	Tests the ROM/RAM address registers and buffer circuits.
2	8-C-23	Checks the ability of the RAM address register to count up and down. Checks RAM output data.
3	8-B-1	Checks the HP-IB data path from the processor to the HP-IB connector and back. It does not check the handshake circuits.
4	8-A-2	Checks the ability of the processor to identify front panel switch closures. Also checks A5 LED drivers, current sources, and digital circuits.
5	8-C-29	Checks the data path from the processor to the fractional N control IC (A21U19), and checks several operations of the fractional N control.

Table 8-5. Trouble Symptoms.

Symptoms	Troubleshooting Procedures
No front panel display or annunciators.	If power supply voltages are correct (see Service Group O) go to Service Group C; if not, troubleshoot power supply, Service Group O.
Abnormal display characters (partial characters or all segments stay on), no response to front panel entries.	Service Group C
Display appears normal, but no response to front panel entries.	Service Group C
Instrument accepts entries but has no signal or sync outputs.	Service Group K
No signal output; sync output correct.	Service Group L
Will not sweep frequency.	Service Group E
X Drive, Z Blank, or Marker signals incorrect.	Service Group N
When External Reference or Option 001 is connected to rear panel REF IN, front panel EXT REF annunciator does not light or flashes on and off.	Service Group G
Output frequency incorrect.	Service Group G
No AUX output or incorrect frequency (sine function 21-60 MHz); front panel output normal.	Service Group D
Amplitude Modulation does not respond properly.	Service Group G
Phase Modulation does not respond properly.	Service Group F
Display reads OSC FAIL.	Service Group D
Output amplitude incorrect for all functions.	Service Group L
Instrument accepts front panel entries but will not program from HP-IB. Fails HP-IB Performance Test.	Service Group B, Signature Analysis Test 3
OSC. FAIL display indication but oscillator circuits check good.	Service Group C, Signature Analysis Test 5
Display or keyboard switch problems.	Service Group A, Signature Analysis Test 4
Control problems, or instrument "locks up" and will not accept entries.	Service Group C Signature Analysis Tests 1, 2
Cannot perform Signature Analysis Tests 1, 2, or 3.	Service Group C ROM Signature Analysis Test
Above tests do not locate the defective component.	Service Group C Signature Analysis Test 0

Table 8-6. Mnemonic Dictionary.

Mnemonic	Definition
H ATL	Addressed to Listen
H ATN	Attention
H ATT	Addressed to Talk
H BBCL	Bus Clock on HP-IB side of isolation
L BCL	Bus Clock to HP-IB
H BDC0 thru H BDC1	Direct Control 0 - 1 on HP-IB side of isolation
H BDS1 thru H BDS2	HP-IB Data Serial 1 - 2
H BI	Bus Interrupt
H BIG	Bus Interrupt Gated
L BOR	Borrow (from RAR Low)
H BPID1 thru H BPID8	HP-IB Parallel Input Data 1 - 8
H BPOD1 thru H BPOD8	HP-IB Parallel Output Data 1 - 8
H BSID	HP-IB Serial Input Data
H BSOD	HP-IB Serial Output Data
L CAR	Carry (from RAR Low)
H CDN	Count Down Enable
L CHK	Check
H CODA	Code A
H CODB	Code B
H CS0 thru H CS2	Chip Select 0 - 2
HCS0D thru H CS2D	Chip Select 0 - 2 Delayed
H CS1DD thru H CS2DD	Chip Select 1 - 2 Doubly Delayed
L CSR	Clock Shift Register (Keyboard & Display)
L CSRZ	Clear Select ROM Zero
H CUN	Count Up Enable
L DAC	Data Accepted
H DC0 thru H DC6	Direct Control 0 - 6
L DOE	Data Out Enable
H DS0 thru H DS3	Device Select 0 - 3
L EC	External Clock (to N.F Chip)
H EOI	End or Identify
H FND	Fetch New Data
H IAK	Interrupt Acknowledge
H IBI	Inhibit Bus Interrupt
H IEN	Interrupt Enable
L IFC	Interface Clear
L IFC*	Interface Clear Latched
H II	Interrupt Inhibit
L IMBP	Inhibit Machine Bus to Processor Bus
L INV	Instruction Valid (to N.F Chip)
H KCI	Kilohertz Clock Interrupt
L LCN	Load RCR Enable
L LDI	Load Data In
L LDO	Load Data Out
L LMBL	Load Machine Bus Latch
H LNG	Listening
L LRAR	Load RAM Address Register
L LRCR	Load RAM/ROM Control Register
L LRP	Load RAM Page Register (from Decoder)

Mnemonic	Definition
H MBL0 thru H MBL7	Machine Bus Latch 0 - 7
H MC	Main Clock
H MD0 thru H MD7	Machine Data Bus 0 - 7
H NBAA	New Byte Accepted by Acceptor Handshake
H NBAS	New Byte Available to Source Handshake
H NBMB	Enable Machine Bus Latch to Machine Bus
L NDR	New Data Ready
L NMBP	Enable Machine Bus to Processor Bus
L NRAB	Enable RAM Address to Machine Bus
H NRCA	Enable Reset Code A
L NRCB	Enable RCR to Machine Bus
L NRD	Enable ROM Data
L NSLF	Enable Sweep Limit Flag
L ODV	Output Data Valid
H PD0 thru H PD7	Processor Data Bus 0 7
H PID0 thru H PID7	Parallel Input Data (from HP-IB, Processor side of Isolation)
L PRS	Preset
H PSG	Program Source Gate
H RA0 thru H RA11	ROM Address 0 - 11
L RAD	Read Arithmetic Data (from N.F Chip)
L RAN	RAM A Enable
L RBA	Read Bus Address
L RBD	Read HP-IB Data
L RBN	RAM B Enable
L RCA	Reset Code A
L RCB	Reset Code B
L RCN	RAM C Enable
H REN	Remote Enable
L RFD	Ready for Data
L RFF	Read Function Flags
L RFND	Reset Fetch New Data
L RIR	Read Interrupt Register
L RKB	Read Keyboard Data
H RMA0 thru H RMA9	RAM ADDRESS 0 - 9
L ROVD	Reset Output Data Valid
L RSS	Read Signal Source Data
L RWN	RAM Write Enable
L SAR	Select RAM Address Register
H SATL	Set Addressed to Listen
H SATT	Set Addressed to Talk
L SCA	Set Code A
L SCB	Set Code B
L SCR	Select ROM/RAM Control Register
L SFND	Set Fetch New Data
H SLC	Sweep limit Control
H SLF	Sweep Limit Flag
H SLI	Sweep Limit Interrupt
L SM	Select Monitor
L SMB	Select Machine Bus (from Decoder)
L SMBL	Select Machine Bus Latch
L SOD	Serial Output Data to HP-IB, Processor side of Isolation
L SOVD	Set Output Data Valid
H SP	Spare
H SRA	Select RAM A
H SRB	Select RAM B
H SRC	Select RAM C
H SRM	Select RAM (from Decoue.:

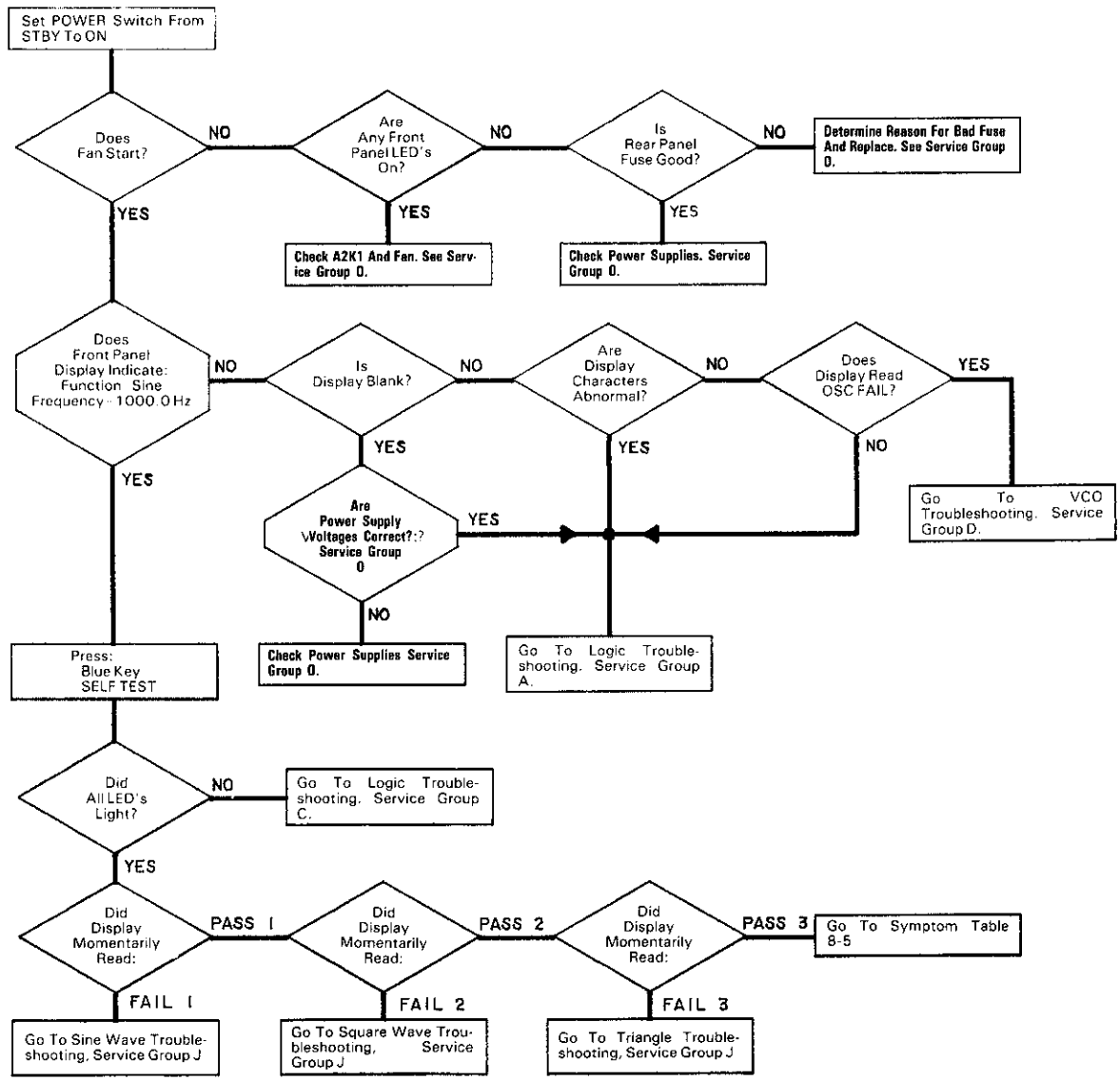

Figure 8-28(b). Basic Troubleshooting Procedure.

GENERAL SCHEMATIC NOTES

1. PARTIAL REFERENCE DESIGNATIONS ARE SHOWN. PREFIX WITH ASSEMBLY OR SUBASSEMBLY DESIGNATION(S) OR BOTH FOR COMPLETE DESIGNATION.

2. COMPONENT VALUES ARE SHOWN AS FOLLOWS UNLESS OTHERWISE NOTED.
   RESISTANCE IN OHMS
   CAPACITANCE IN MICROFARADS
   INDUCTANCE IN MILLIHENRYS

3. DENOTES EARTH GROUND. USED FOR TERMINALS WITH NO LESS THAN A NO. 18 GAUGE WIRE CONNECTED BETWEEN TERMINAL AND EARTH GROUND TERMINAL OR AC POWER RECEPTACLE.

4. DENOTES FRAME GROUND. USED FOR TERMINALS WHICH ARE PERMANENTLY CONNECTED WITHIN APPROXIMATELY 0.1 OHM OF EARTH GROUND.

5. DENOTES GROUND ON PRINTED CIRCUIT ASSEMBLY. (PERMANENTLY CONNECTED TO FRAME GROUND).

6. DENOTES ASSEMBLY.

7. DENOTES MAIN SIGNAL PATH.

9. DENOTES FEEDBACK PATH.

10. DENOTES FRONT PANEL MARKING.

11. DENOTES REAR PANEL MARKING.

12. DENOTES SCREWDRIVER ADJUST.

13. * AVERAGE VALUE SHOWN, OPTIMUM VALUE SELECTED AT FACTORY. THE VALUE OF THESE COMPONENTS MAY VARY FROM ONE INSTRUMENT TO ANOTHER. THE METHOD OF SELECTING THESE COMPONENTS IS DESCRIBED IN SECTION V OF THIS MANUAL.

14. DENOTES SECOND APPEARANCE OF A CONNECTOR PIN.

15. \924/ DENOTES WIRE COLOR: COLOR CODE SAME AS RESISTOR COLOR CODE. FIRST NUMBER IDENTIFIES BASE COLOR, SECOND NUMBER IDENTIFIES WIDER STRIP, THIRD NUMBER IDENTIFIES NARROWER STRIP. (e.g. \924/ = WHITE, RED, YELLOW.)

17. ALL RELAYS ARE SHOWN DEENERGIZED.

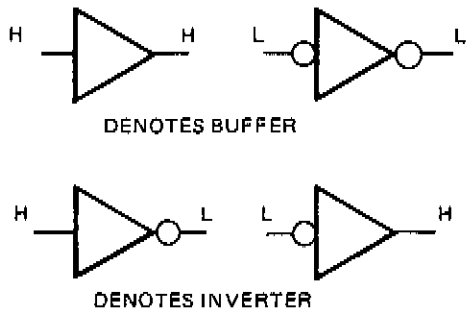

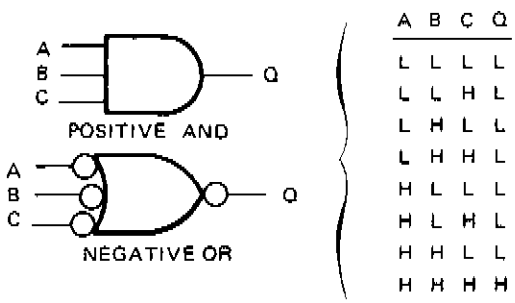

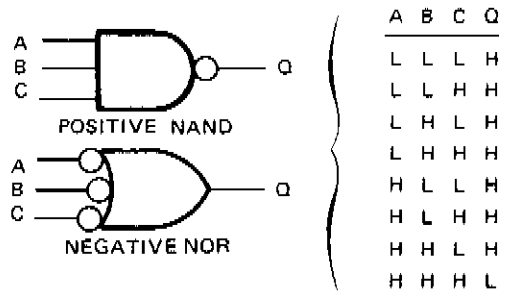

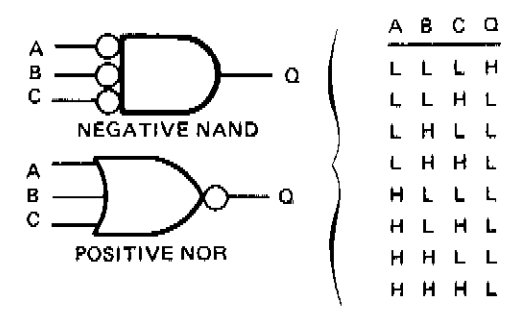

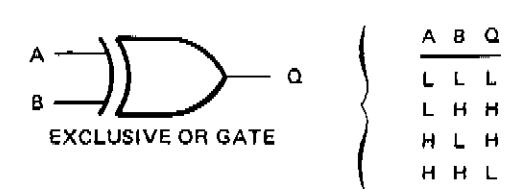

REFERENCE DESIGNATIONS

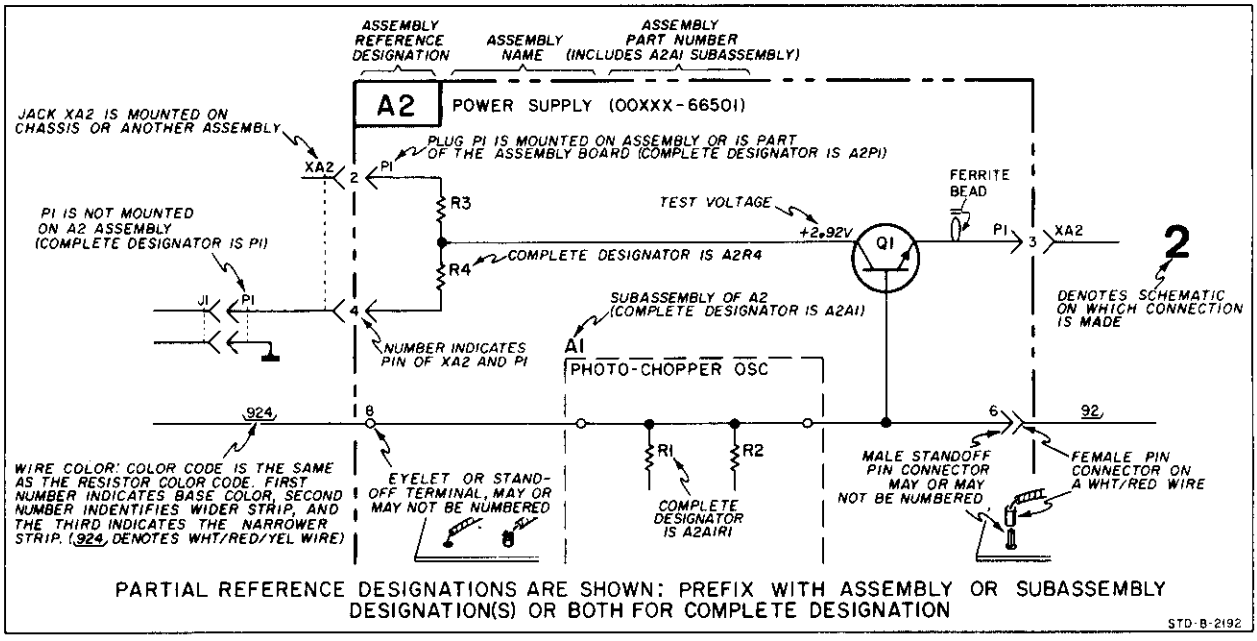

PARTIAL REFERENCE DESIGNATIONS ARE SHOWN: PREFIX WITH ASSEMBLY OR SUBASSEMBLY DESIGNATION(S) OR BOTH FOR COMPLETE DESIGNATION

STD-B-2192

SERVICE GROUP A – KEYBOARD AND DISPLAY.

Troubleshooting Information.

The most common problem with the A5 front panel assembly are stuck keys. A stuck key is often noticeable by its "lack of play". The following troubleshooting hints are intended to help determine whether a problem on the A5 assembly is due to a malfunctioning key or a component failure.

1. Check the 1kHz clock signal at TP1, TP2, and TP3. The 1kHz clock is the rate at which a logic "1", supplied by HMD4 of the machine data bus, is shifted through registers U6 and U3.

2. Check U3 pin 13 for a 5V pulse every 16ms. A 5V pulse on this pin at a 16ms rate indicates that shift registers U6 and U3 are functioning properly.

3. Using an oscilloscope, look at the inputs (D0-D3) to U8. A negative going pulse on one of these inputs occurs when a front panel key is pressed. A negative pulse that is present when no keys have been pressed indicates a stuck key.

4. Check the machine data bus lines at the input and output of U9 for logic level transitions. The same level present at the input and its corresponding output indicate a problem with U9.

5. Signature Analysis Test #4 can be used to determine if a key is stuck. This test also checks the LED drivers, current sources, and digital circuits.

Removal of Keyboard Printed Circuit Assembly A5.

Disconnect the flat gray cable to the keyboard assembly from A6, and disconnect the signal and sync output cables from the front panel.

Remove the plastic trim strip from the top of the front frame by prying up with a small screwdriver or similar tool in one of the slots near either end of the strip.

Remove the two screws from the top of the front frame (beneath the trim strip) and two corresponding screws from the bottom side of the front frame.

Push the printed circuit board and front panel assembly forward to remove from the front frame.

Remove the ten screws that hold the printed circuit board to the front panel assembly.

Replacement of Keyboard Switches.

The keyboard switches (except the power switch) may be removed by using a hot soldering iron to melt the plastic tabs on the back of the printed circuit board that hold the switch to the board.

The keycap is press-fitted to the switch and may be pulled off.

To install a new switch, make sure the switch is oriented properly, hold it firmly against the printed circuit board, and "rivet" the plastic tabs with a flat soldering iron tip. Be careful not to apply so much heat that the tabs are completely melted.

SIGNATURE ANALYSIS TEST 4.

This test checks the ability of the processor (A6U9) to identify front panel switch closures. It also checks the A5 LED drivers, current sources, and digital circuits.

This test uses two methods of signature analysis. The main difference between these methods is:

> Method 1 tests a repetitive data stream for a fixed period of time and generates a single stable signature.
>
> Method 2 tests a logical 1 (+5 V) for several periods of time, which are determined by the 3325A processor in response to the errors it has sensed or the test routine that has been programmed. Each situation produces a unique stable signature.

Some signatures in this test are observed at IC's which are on the front panel printed circuit board, A5. Use the following procedure to gain access to the front of this board:

a. Disconnect the internal cables from the Signal and Sync output connectors.

b. Remove the plastic trim strip from the top of the front frame by prying up with a small screwdriver or similar tool in one of the slots near either end of the strip.

c. Remove the two screws from the top of the front frame (beneath the trim strip) and two corresponding screws from the bottom side of the front frame.

d. Push the printed circuit board and front panel assembly forward to remove from the front frame. Be careful not to put stress on the flat cable to the front panel assembly.

e. Remove the ten screws that hold the printed circuit board to the front panel assembly.

Use the following procedure for Signature Analysis Test 4:

a. Set the 3325A POWER switch to STBY.

b. Disconnect the flat cable to the attenuator assembly to prevent damage to the relays.

c. Connect the signature analyzer as follows:

Clock ..... SA CLK (at left of A6U9)
Start and Stop ..... SA S/S (at right of A6U15)
Ground ..... 3325A ground
(stiffener channel on deck between A6 and A21 or any Ground test point)

d. Set the signature analyzer controls as follows:

Line ..... On
Start ..... ⌐└ (in)
Stop ..... ⌐└ (in)
Clock ..... ┘⌐ (out)
Hold ..... Off
Self Test ..... Off

e. Make sure the CSØ, CS1, & CS2 shorting connectors (near right front corner of A6) are in the center position.

f. Connect A6TP3 and A6TP6 to ground.

g. Set all bus address switches (A6S1) to the OFF position. See switch drawing below.

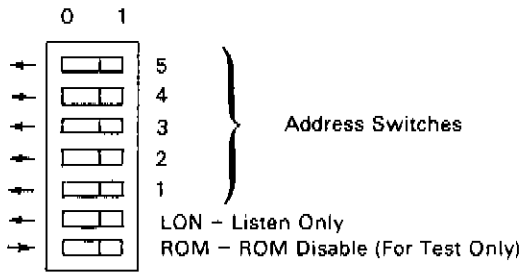

h. Set 3325A POWER switch to ON.

i. Disconnect ground from A6TP3, then A6TP6.

j. Set bus address switch 4 to ON.

k. Place the signature analyzer probe on +5 V (logic 1). The large plated area near the center of A6 is +5 V.

l. Follow the flow diagram from START. If no stable or valid signatures are obtained, the processor (A6U9) or the ROM's (A6U1–4) may be defective. Use the ROM Signature Analysis Test to check these components.

NOTE

After completion of the test, be sure to replace all cables, jumpers, and switches to the normal position.

Fig 8-29
Sht 1 of 3

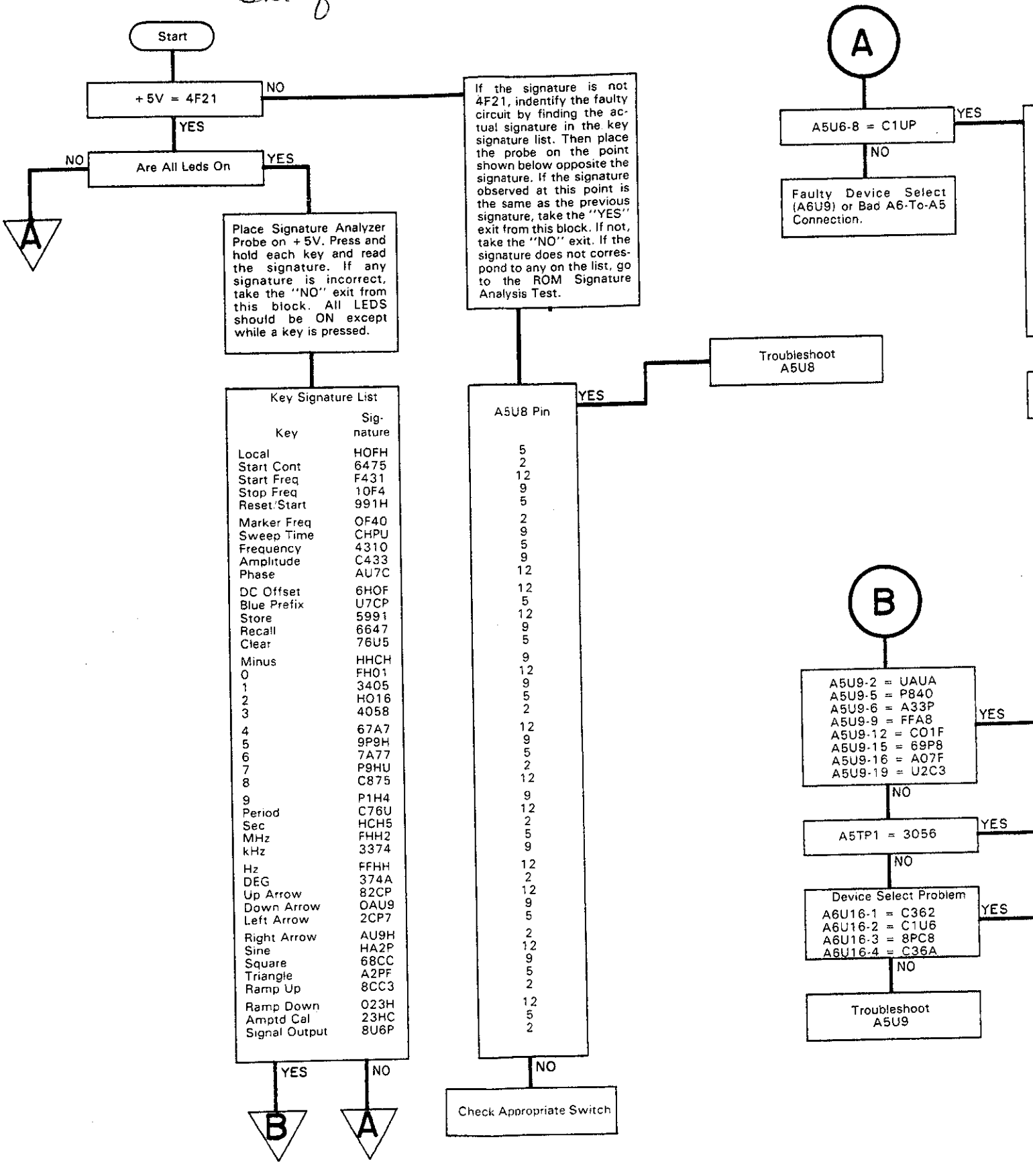

Fig 8-29
Sht 2 of 3

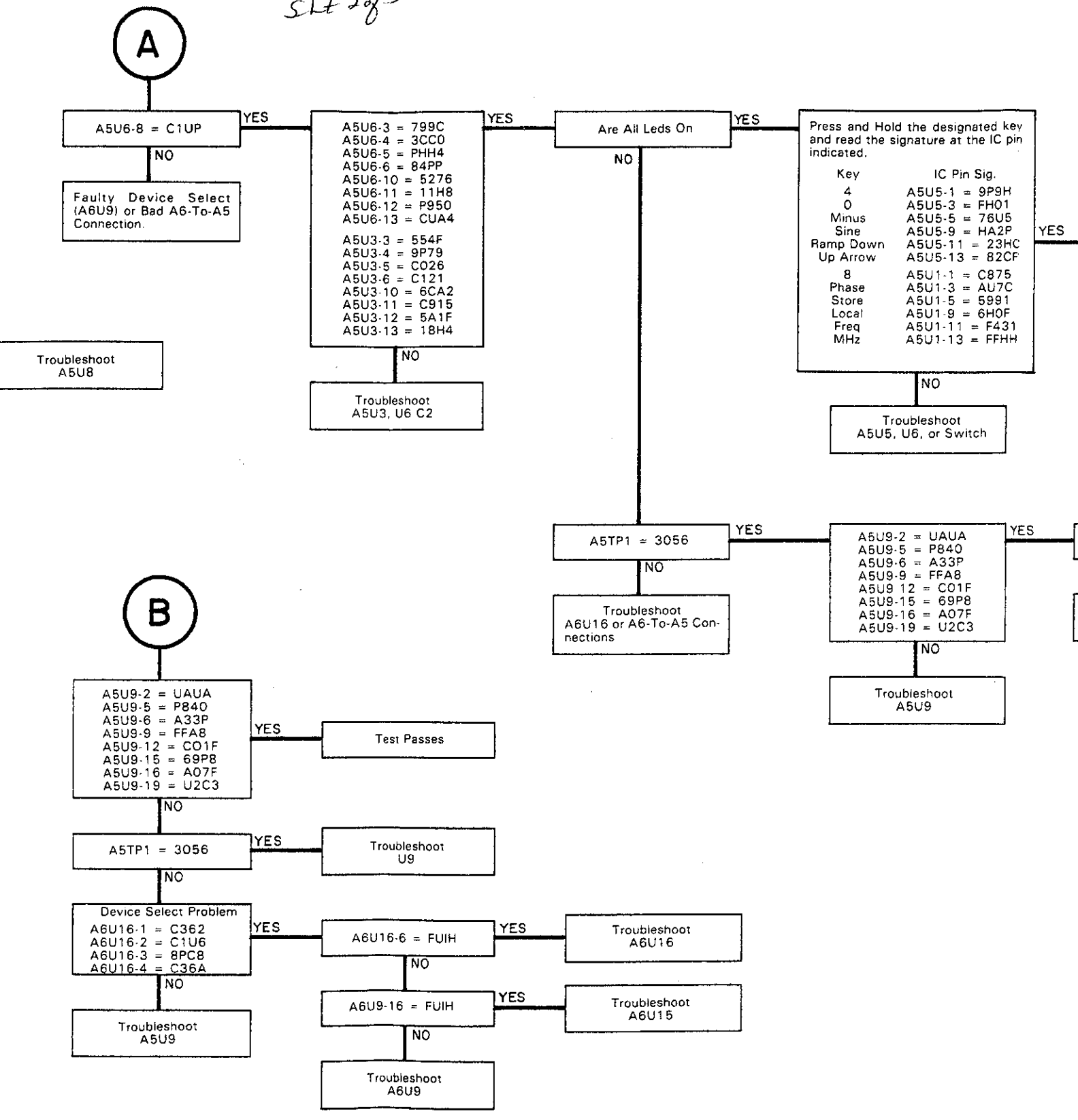

Fig 8-29
Sht 3 of 3

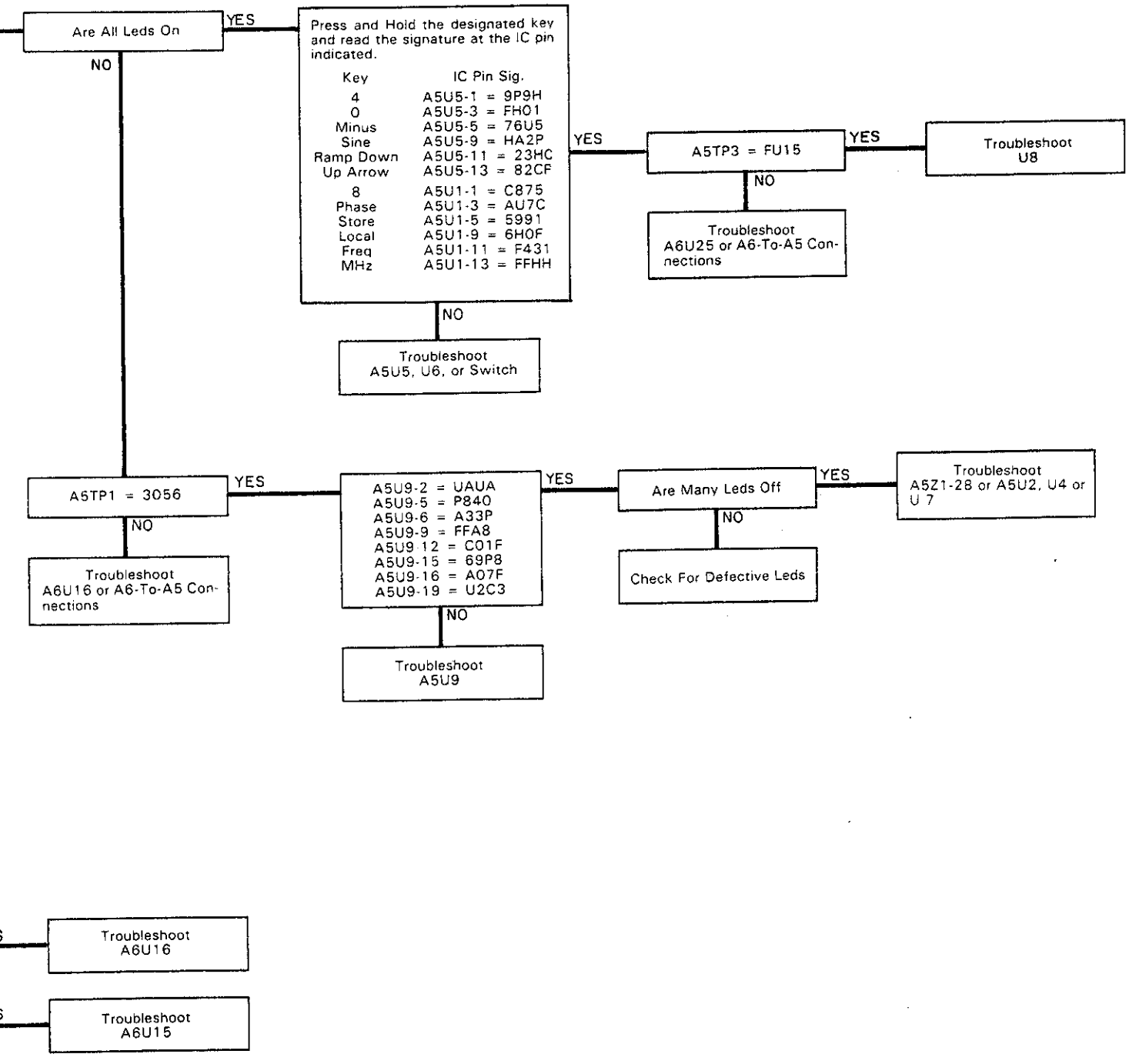

Figure 8-29. Signature Analysis Test 4.

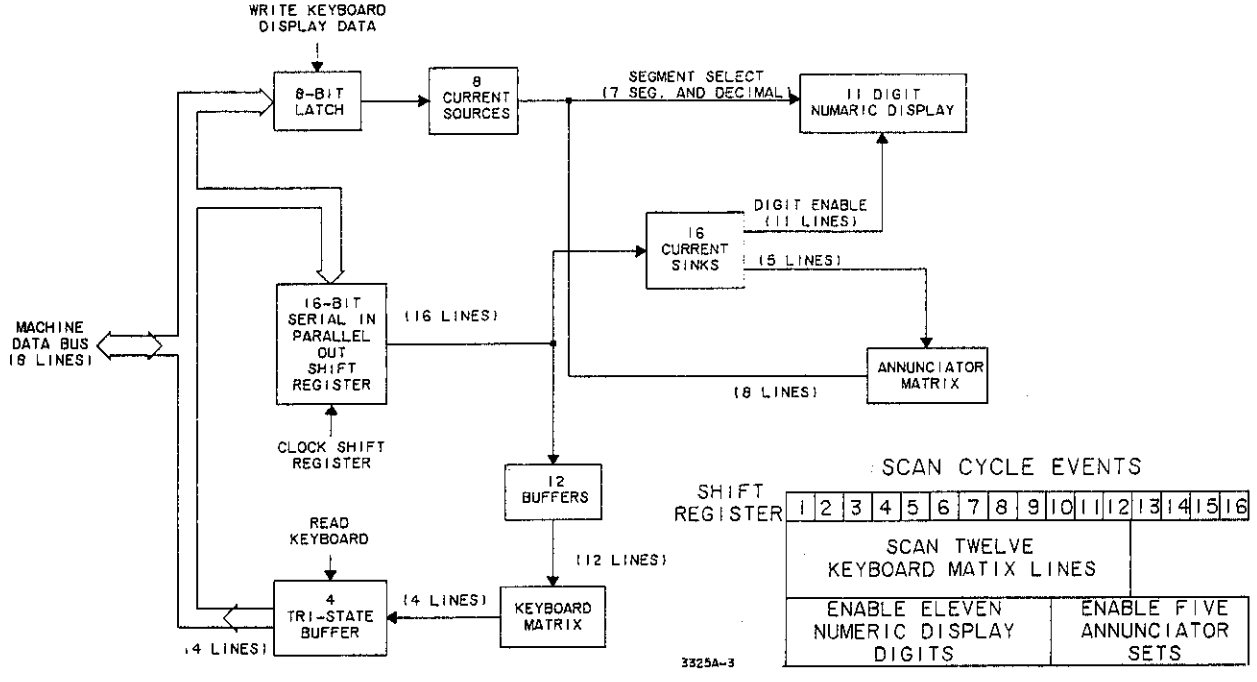

Keyboard and Display Block Diagram

Fig 8-30 Sht 1 of 4

Designator	Board Location
C1	G
C2	F
C3	C
C4	B
C5	B
C6	G
C7	F
C8	A
C9	B
C10	A
CR1	H
CR2	G
CR3	G
CR4	G
CR5	H
CR6	H
CR7	G
CR8	F
CR9	F
CR10	H
CR11	H
CR12	G
CR13	F
CR14	F
CR15	G
CR16	F
CR17	C
CR18	C
CR19	B
CR20	C
CR21	C
CR22	B
CR23	C
CR24	C
CR25	B
CR26	B
CR27	B
CR28	B
CR29	B
CR30	A
CR31	A
CR32	A
CR33	A
CR34	A
CR34	A
CR35	A
CR36	A
J1	C
L1	C
Q1	A
Q2	A
Q3	A
Q4	A
Q5	A
Q6	A
Q7	A
Q8	A
R1	A
R2	A
R3	A
R4	A
R5	A
R6	A
R7	A
R8	A
R9	A
R10	A
R11	A
R12	A
R13	A
R14	A
R15	A
R16	A

Designator	Board Location
R20	G
R21	F
R22	C
R23	A
S1	H
S2	H
S3	H
S4	G
S5	F
S6	F
S7	H
S8	H
S9	G
S10	F
S11	F
S12	F
S13	E
S14	E
S15	E
S16	D
S17	D
S18	E
S19	E
S20	E
S21	D
S22	D
S23	E
S24	E
S25	E
S26	D
S27	D
S28	E
S29	E
S30	E
S31	D
S32	D
S33	C
S34	C
S35	C
S36	C
S37	B
S38	B
S39	A
S40	A
S41	A
S42	A
S43	A
S44	H
Test Points	
1	C
2	F
3	G
GND	A
GND	G
U1	G
U2	G
U3	F
U4	E
U5	D
U6	D
U7	C
U8	G
U9	B
U10	F
U11	F
U12	F
U13	E
U14	E
U15	E
U16	D
U17	D
U18	D
U19	D
U20	C

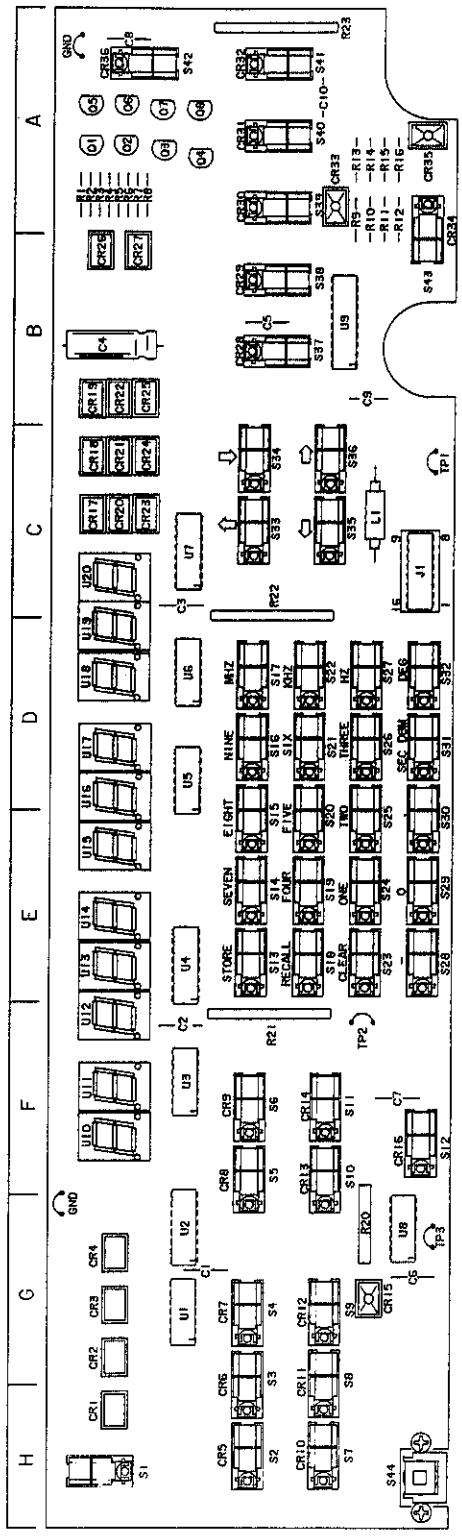

Rev C*

A5
03325-66505

***Revision A, Revision B, and Revision C 03325-66505 boards are identical regarding component layout and values. The revisions reflect manufacturing changes only.**

Fig 8-30 sht 2 of 4

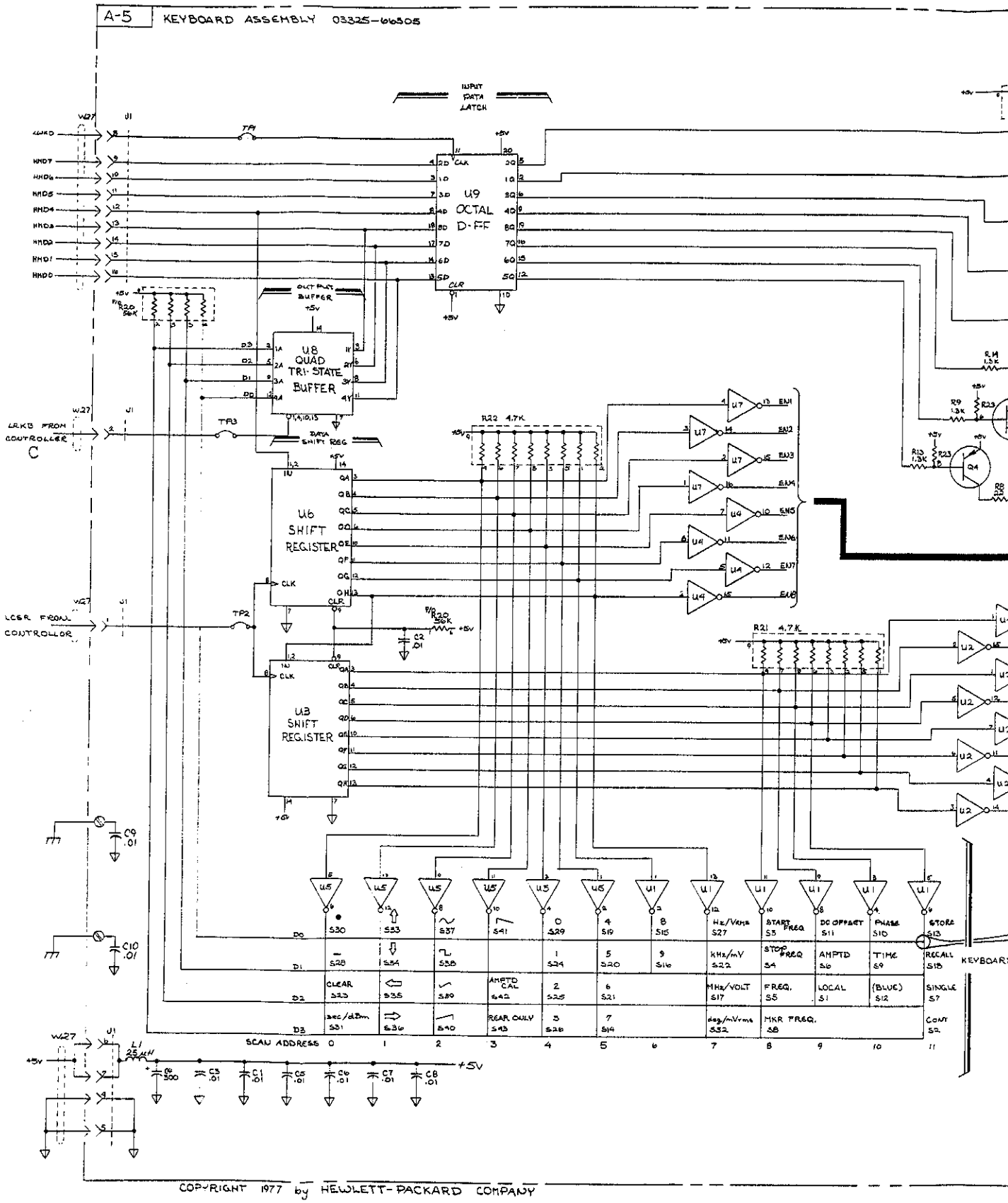

Fig 8-30 Sht 3 of 4

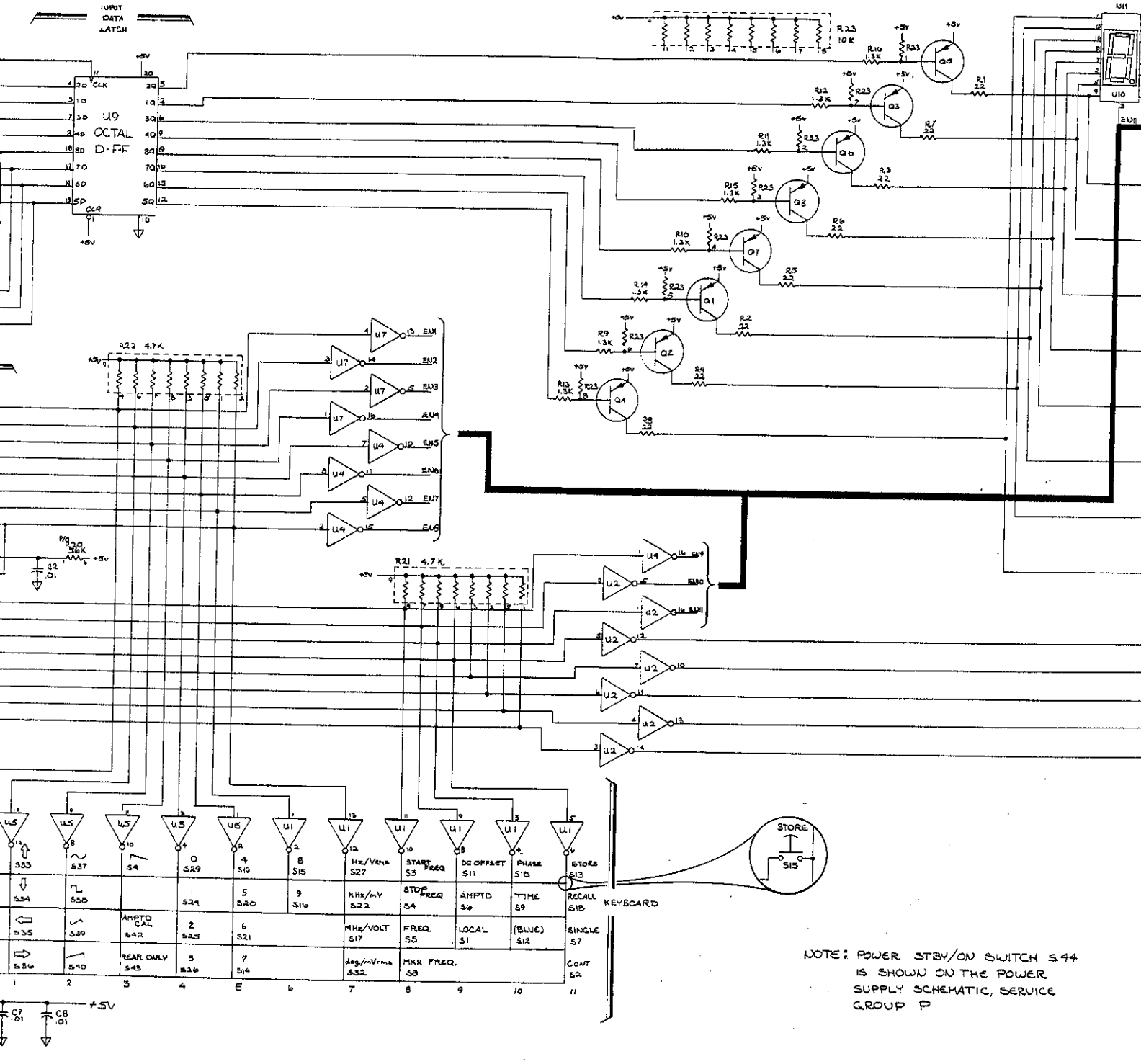

NOTE: POWER STBY/ON SWITCH S44 IS SHOWN ON THE POWER SUPPLY SCHEMATIC, SERVICE GROUP P

Fig 8-30 Sht 4 of 4

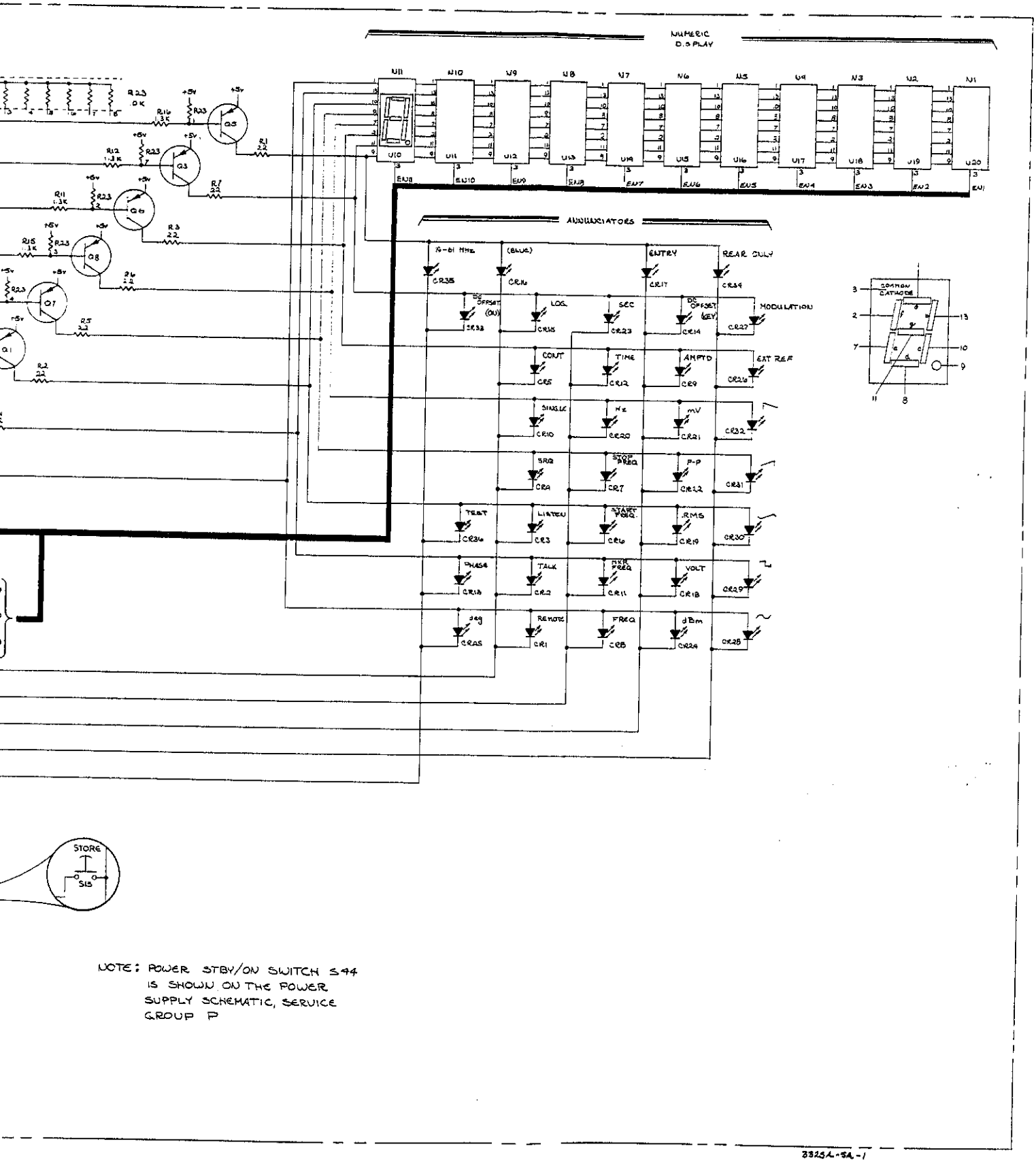

NOTE: POWER STBY/ON SWITCH S44 IS SHOWN ON THE POWER SUPPLY SCHEMATIC, SERVICE GROUP P

3325A-5A-1

Figure 8-30. Keyboard and Display, A5.
8-A-7/8-A-8

SERVICE GROUP B - HP-IB CIRCUITS.

Troubleshooting Information.

The most common failure on the HP-IB portion of the A6 board are the optical isolators. The optical isolators are used because of the electrical isolation of the HP-IB circuitry from the rest of the assembly. The following hints suggest various procedures for troubleshooting this section of the assembly.

1. The HP-IB circuitry has its own +5V power supply (U65/U74). If HP-IB problems are suspected, the first step should be to determine if +5V is present.

2. Using an oscilloscope and a probe, check both sides of the optical isolators for legitimate TTL levels. The oscilloscope and probe can also be used to check the data path between the processor and the HP-IB connector.

3. The continuity of the data path from the processor to the HP-IB connector and back is also checked by running signature analysis test #3.

4. A check of the handshake circuitry is made by running signature analysis test #0 (Service Group C). This test writes signatures to every point on the A6 board*. When used in conjunction with the schematic, one can check the signatures at the output and input of the individual chips. If a chip has an incorrect output signature, one should then check the input signature. If the input signature is incorrect, then the output signature of the preceding chip should be checked. By troubleshooting in this manner (backwards), one can then identify the chip where the incorrect signature originated.

* This test does not check those gates whose data comes directly from the HP-IB connector.

If the 03325-66506 assembly is to be replaced in a 3325A with serial number 1748A04250 or below, or in one that contains a revision A or revision B A6 assembly, see paragraph 8-113 in the Servicing/Troubleshooting Information section.

SIGNATURE ANALYSIS TEST 3.

This test checks the HP-IB data path from the processor (U9) to the HP-IB connector and back. It does not check the handshake circuits.

This test uses two methods of signature analysis. The main difference between these methods is:

> Method 1 tests a repetitive data stream for a fixed period of time and generates a single stable signature.
>
> Method 2 tests a logical 1 (+5 V) for several periods of time, which are determined by the 3325A processor in response to the errors it has sensed or the test routine that has been programmed. Each situation produces a unique stable signature.

Use the following procedure:

a. Set the 3325A POWER switch to STBY.

b. Disconnect the flat cable to the attenuator assembly to prevent damage to the relays.

c. Connect the signature analyzer as follows:

Clock.....SA CLK (at left of A6U9)
Start and Stop.....SA S/S (at right of A6U15)
Ground.....3325A ground
(stiffener channel on deck between A6 and A21, or any Ground test point)

d. Set the signature analyzer controls as follows:

Line ..... On
Start..... ⌐_(in)
Stop..... ⌐_(in)
Clock ..... _/‾ (out)
Hold ..... Off
Self Test.....Off

e. Place CSØ, CS1 and CS2 shorting connectors (near right front corner of A6) in the O position to select ROM 1.

f. Set the ROM Disable switch (A6S1) to ON (1). Set all other switches on A6S1 to OFF(0).

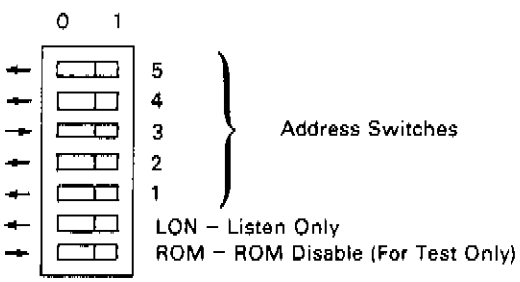

g. Connect A6TP3 (between U15 and U16) to ground.

h. Set 3325A POWER to ON.

i. Remove ground from A6TP3.

j. Place the signature analyzer probe on +5V (logic 1). The large plated area near the center of A6 is +5V.

If the signature is not 5159, troubleshoot A6U9 processor, A6U10 (buffer), the processor data lines HPD0 through 7, and associated circuits. Refer to the ROM Signature Analysis Test.

k. Set bus address bit 3 switch to ON (1) (see drawing above). Note the signature obtained with the analyzer probe on +5V.

The correct +5V signature is 78CU.

Most of the signatures taken in this test are on the I/O side of the HP-IB isolators where the normal SA Clock is not available. In order to take these signatures, it is necessary to supply an external clock as follows:

l. Set 3325A POWER to STBY.

m. Disconnect the signature analyzer from the SA CLK.

n. Unsolder the end of the SA CLK jumper nearest the left edge of the board (away from U9).

o. Apply a pulse train with the following characteristics to the SA CLK jumper:

FREQ	~400 kHz
Amplitude	4V p-p
DC Offset	+2V
Pulse Width	≤1μs

Connect the pulse generator ground to A6 ground (jumper in right front corner of the board). The -hp- Model 3312A may be used as the pulse generator.

p. Connect a clip lead across A6V1 (left rear corner of A6) to short the isolated ground to circuit ground.

q. Connect the signature analyzer clock lead to the raised SA CLK jumper (along with the pulse generator).

r. Set 3325A POWER to ON.

s. Adjust the pulse generator frequency until a stable, gated signature is obtained, indicating that the signature analyzer is triggering on the external clock signal. (The GATE indicator should be flashing and the UNSTABLE SIGNATURE indicator should be off.)

t. The signature taken in Step k should be 78CU as indicated at the START of the flow diagram. If it is not 78CU, go to Figure 8-31(a) to the section of the diagram headed by the signature actually observed. If no stable signature or none of the signatures shown are observed, go to the ROM Signature Analysis Test. If Test 3 passes successfully, go to Signature Analysis Test 4. The tests associated with each signature heading are described as follows:

78CU – Data paths are good.

a. With ATN grounded, signature 9P9H = ATN recognized.

b. With REN grounded, signature 9HUH = REN recognized.

c. With IFC grounded, signature indications are as follows:

A77U = IFC recognized, test passes
P9HU = IFC recognized, IFC* not recognized
77U6 = IFC not recognized, IFC* recognized
Other signatures = IFC not recognized

9P9H – Illegal ATN recognized

9HUH – Illegal REN recognized

A77U – Illegal IFC recognized

3HCC or U45H – Data lost in shift register

3102 – Data lost in I/O

NOTE

After completion of tests, be sure to replace all cables, switches, connectors, and jumpers to the normal position.

Fig 8-31a
Sht 1 of 3

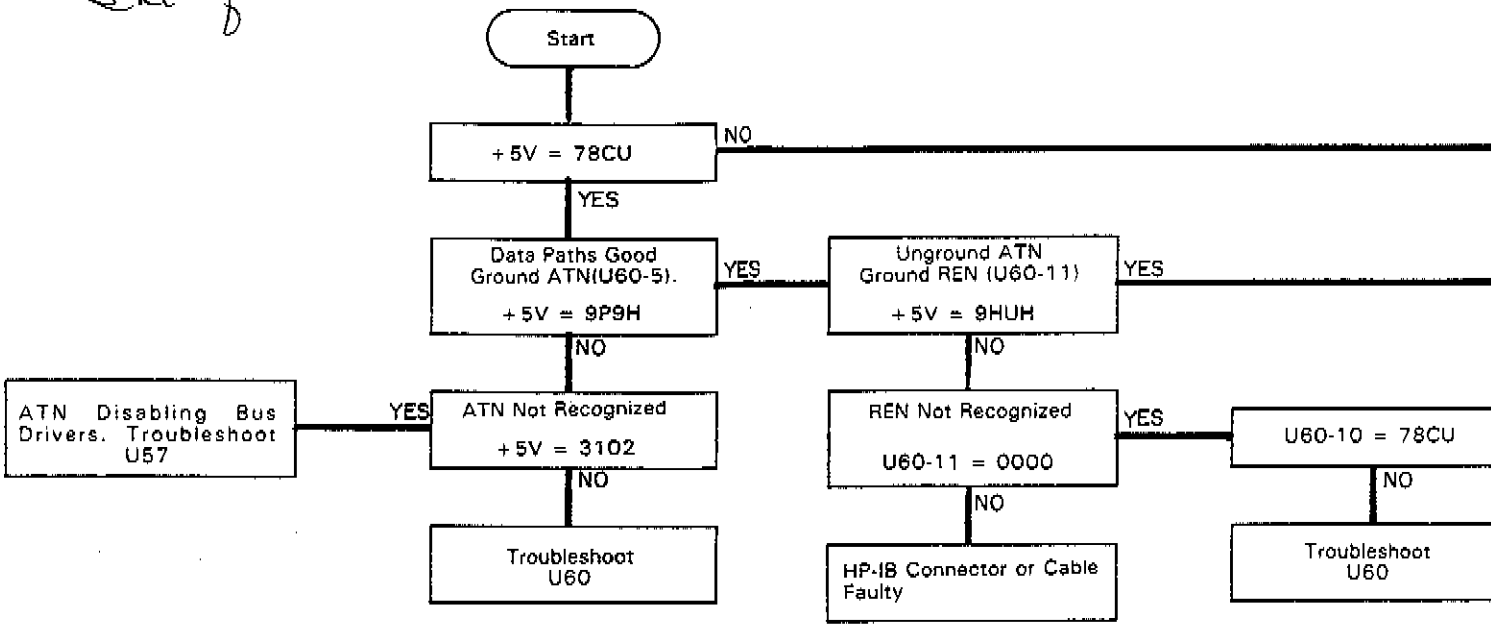

Fig 8-31a
Sht 2 of 3

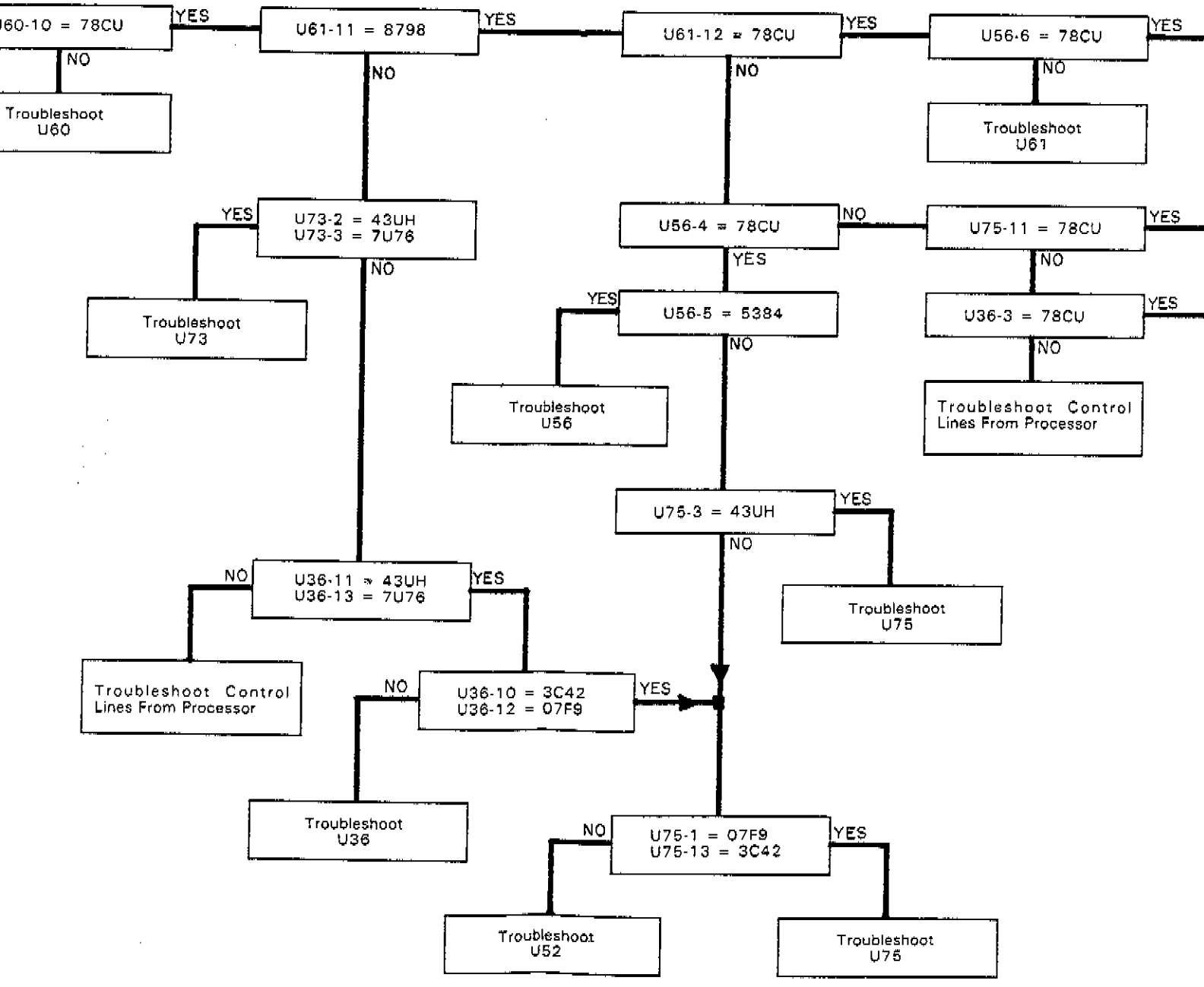

Fig 8-31a
Sht 3 of 3

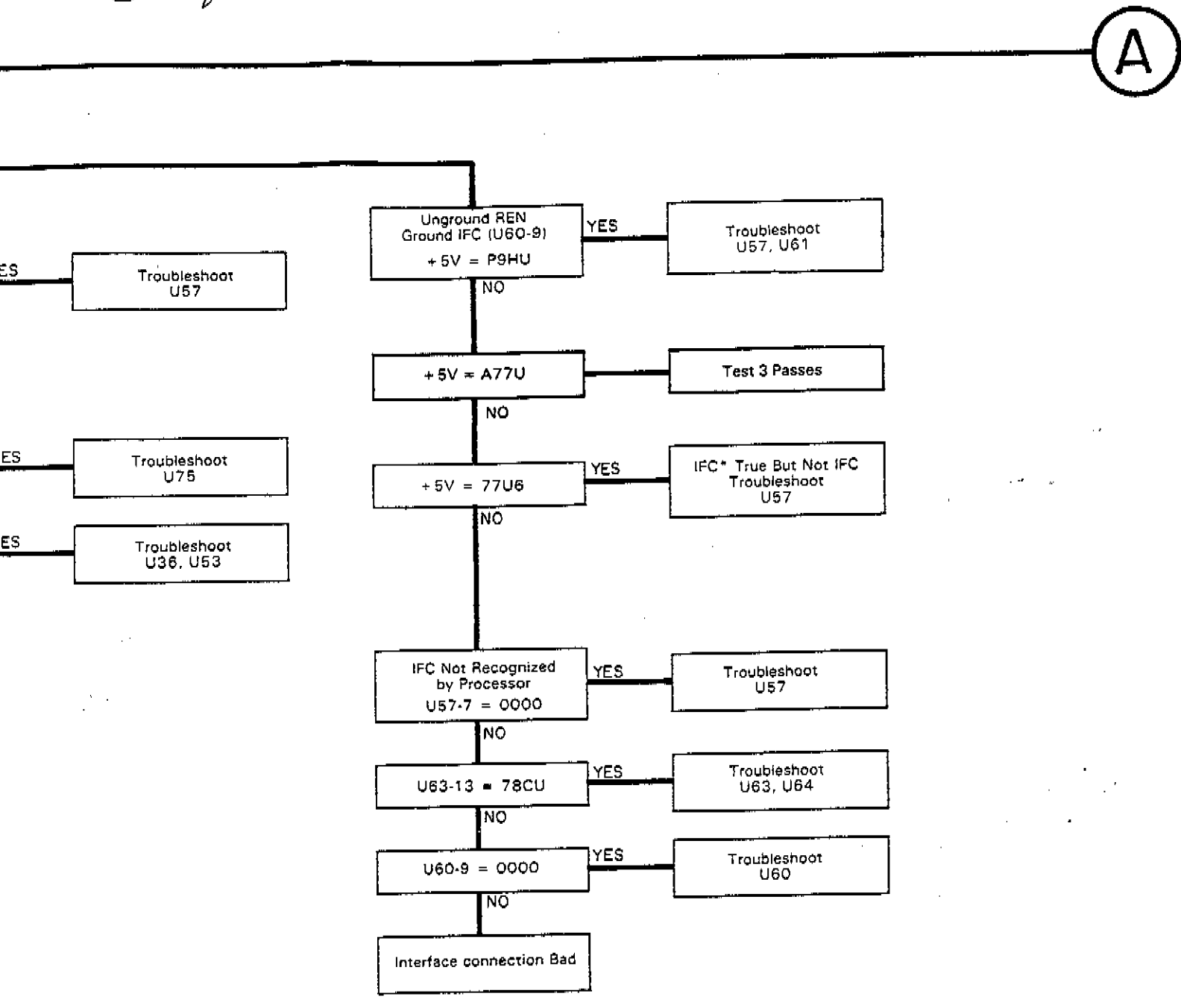

Figure 8-31(a). Signature Analysis Test 3.

Fig 8-31b
Sht 1 of 4

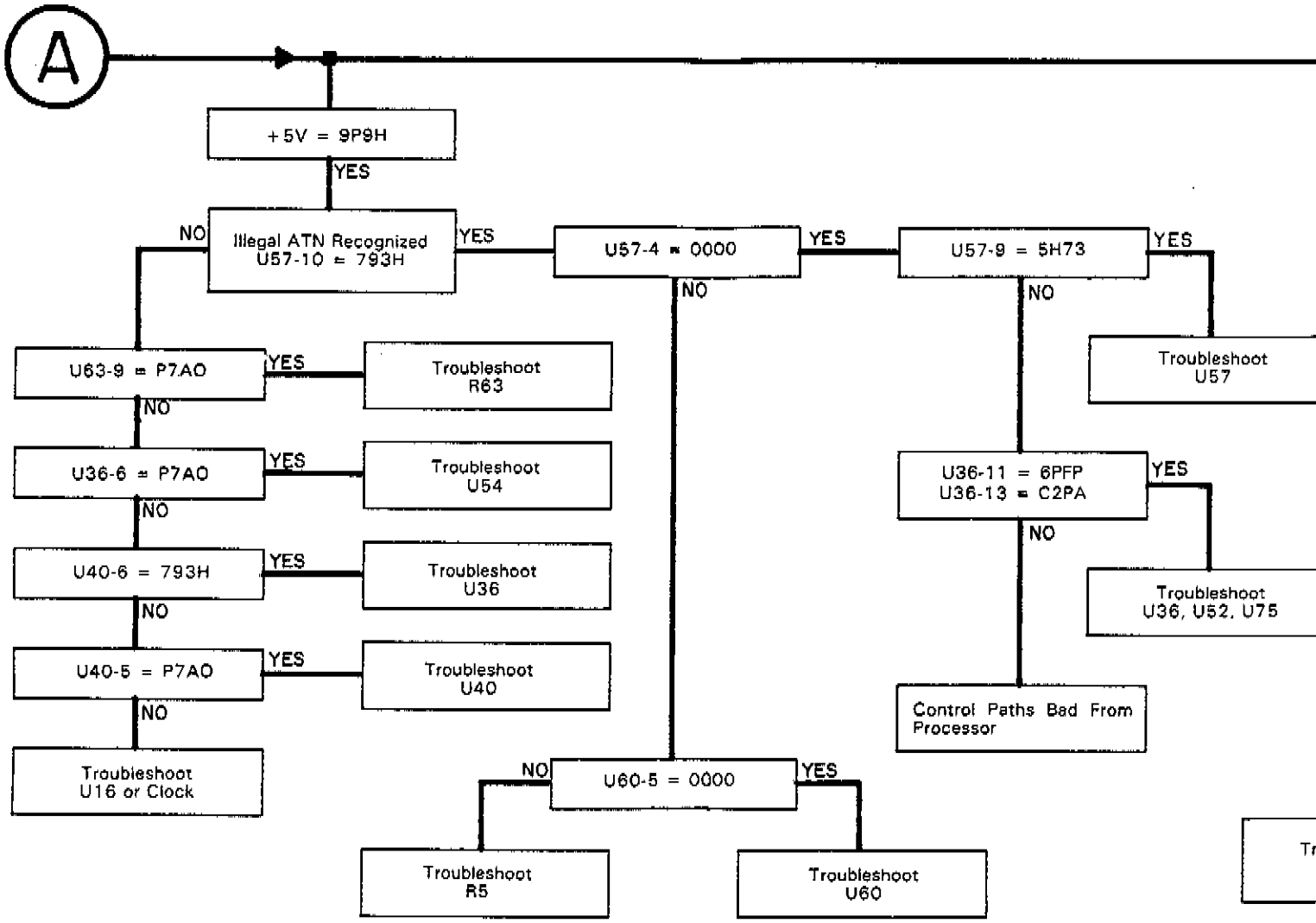

Fig 8-315
Sht 2 of 4

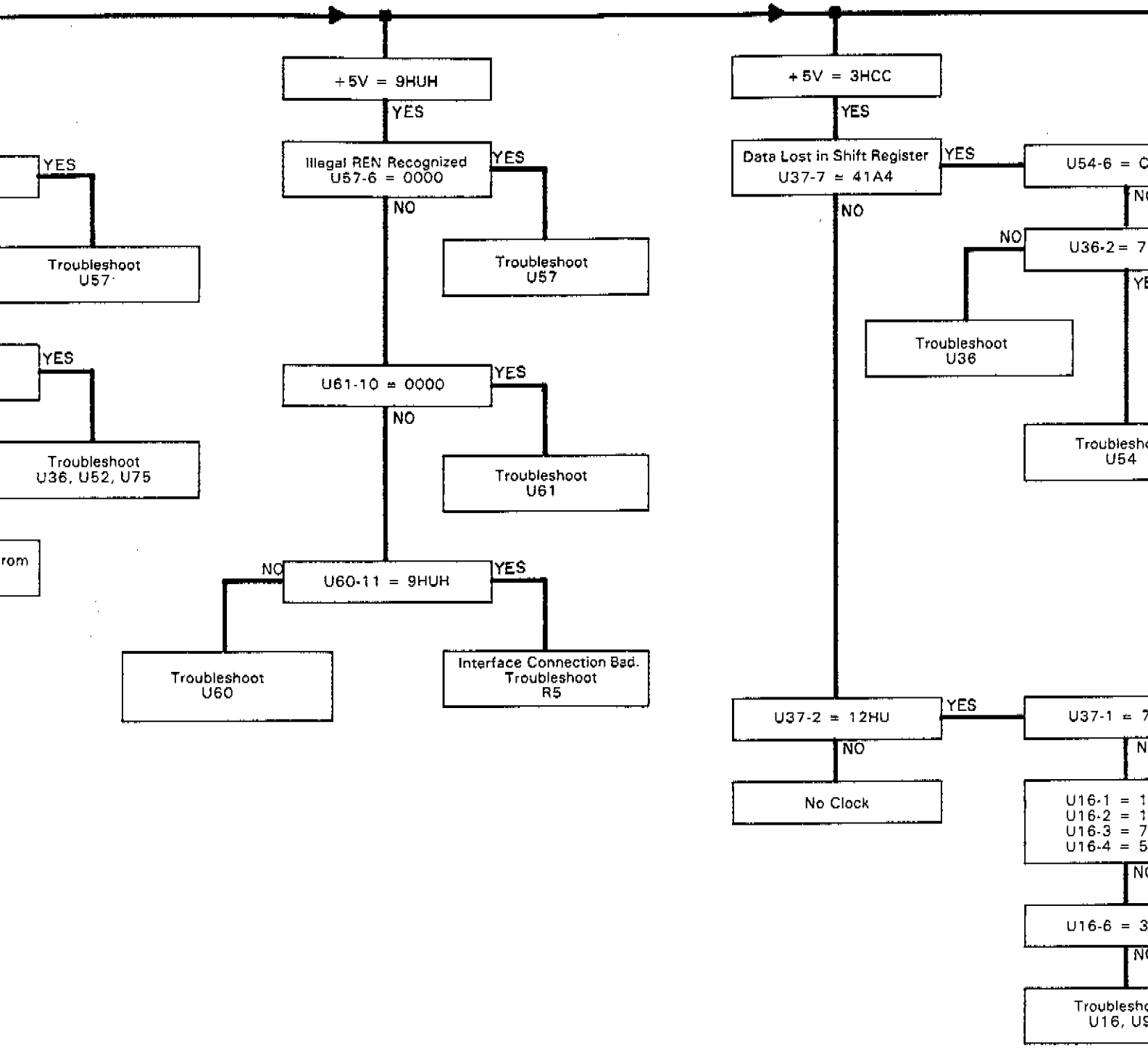

Fig 8-31b
Sht 3 of 4

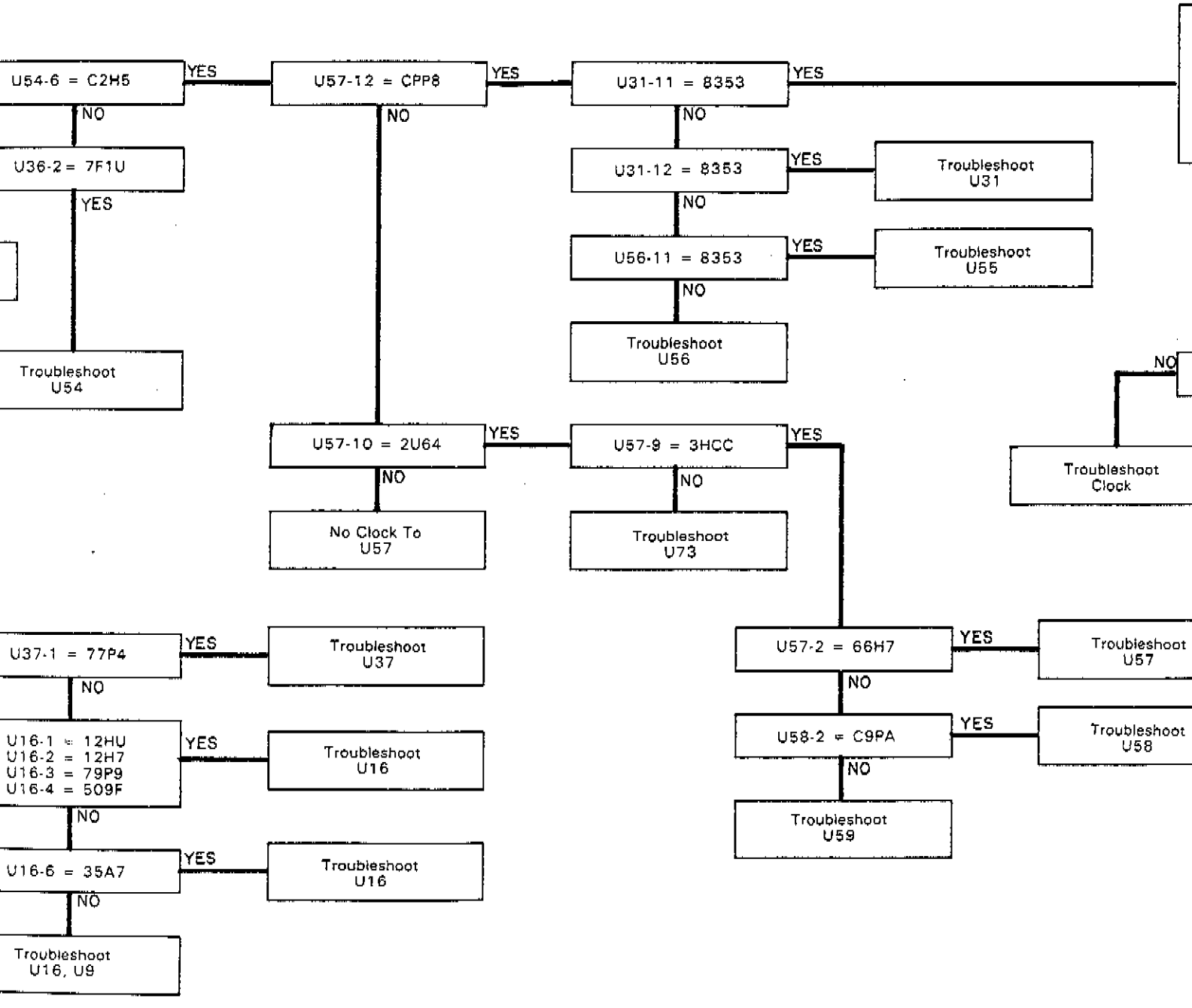

Fig 8-31b
Sht 4 of 4

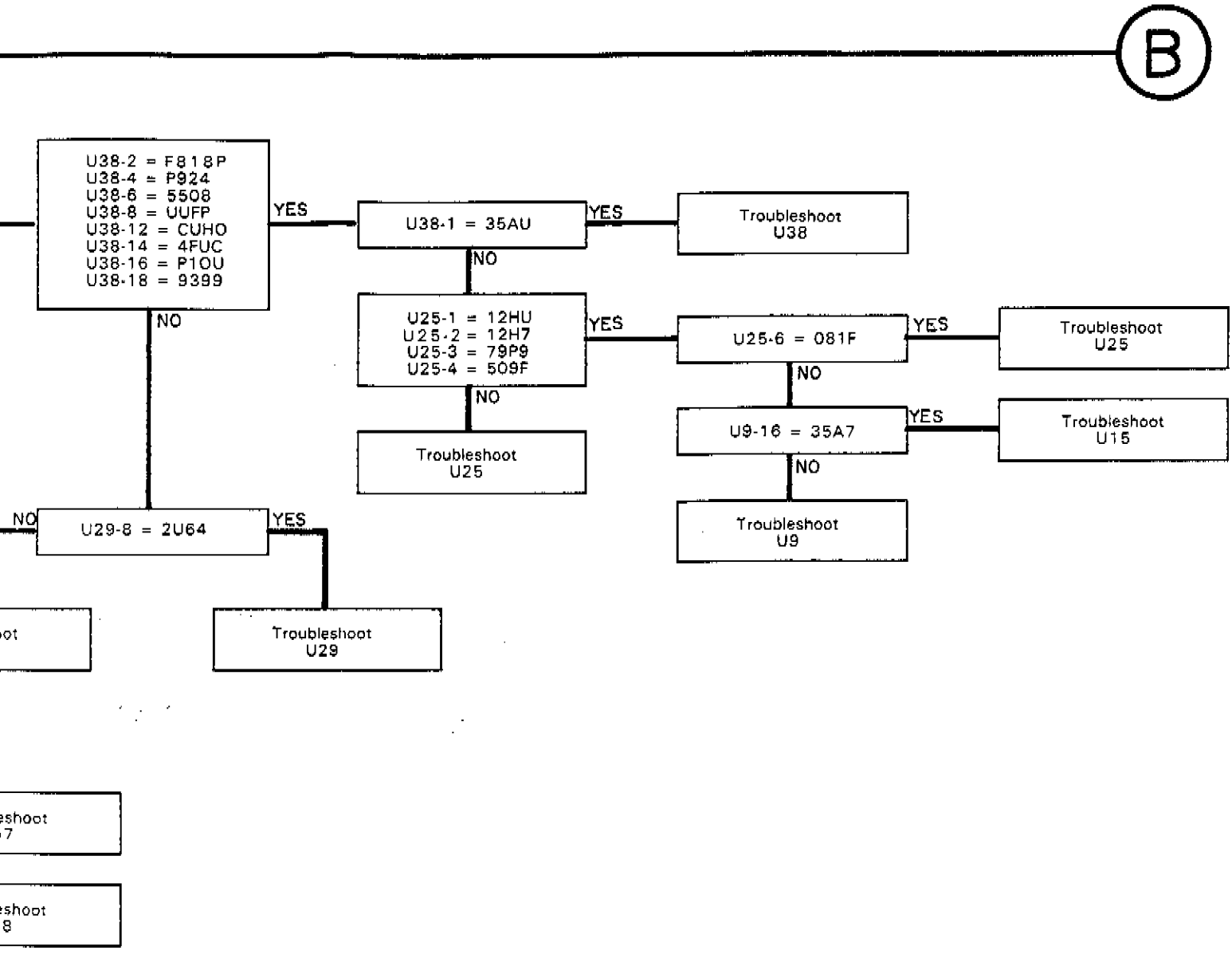

Figure 8-31(b). Signature Analysis Test 3.

Fig 8-31c
Sht 1 of 3

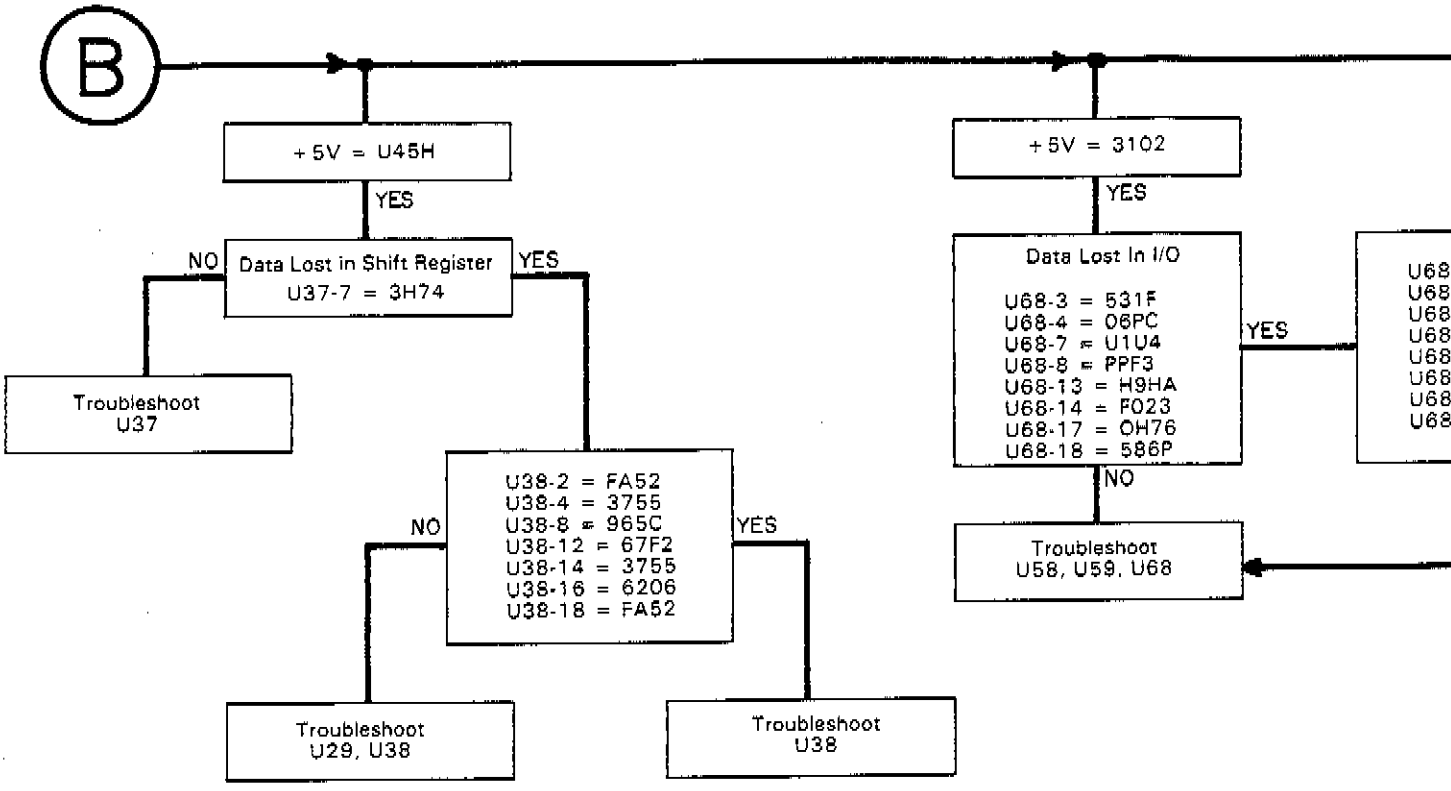

Fig 8.31c
Sht 2 of 3

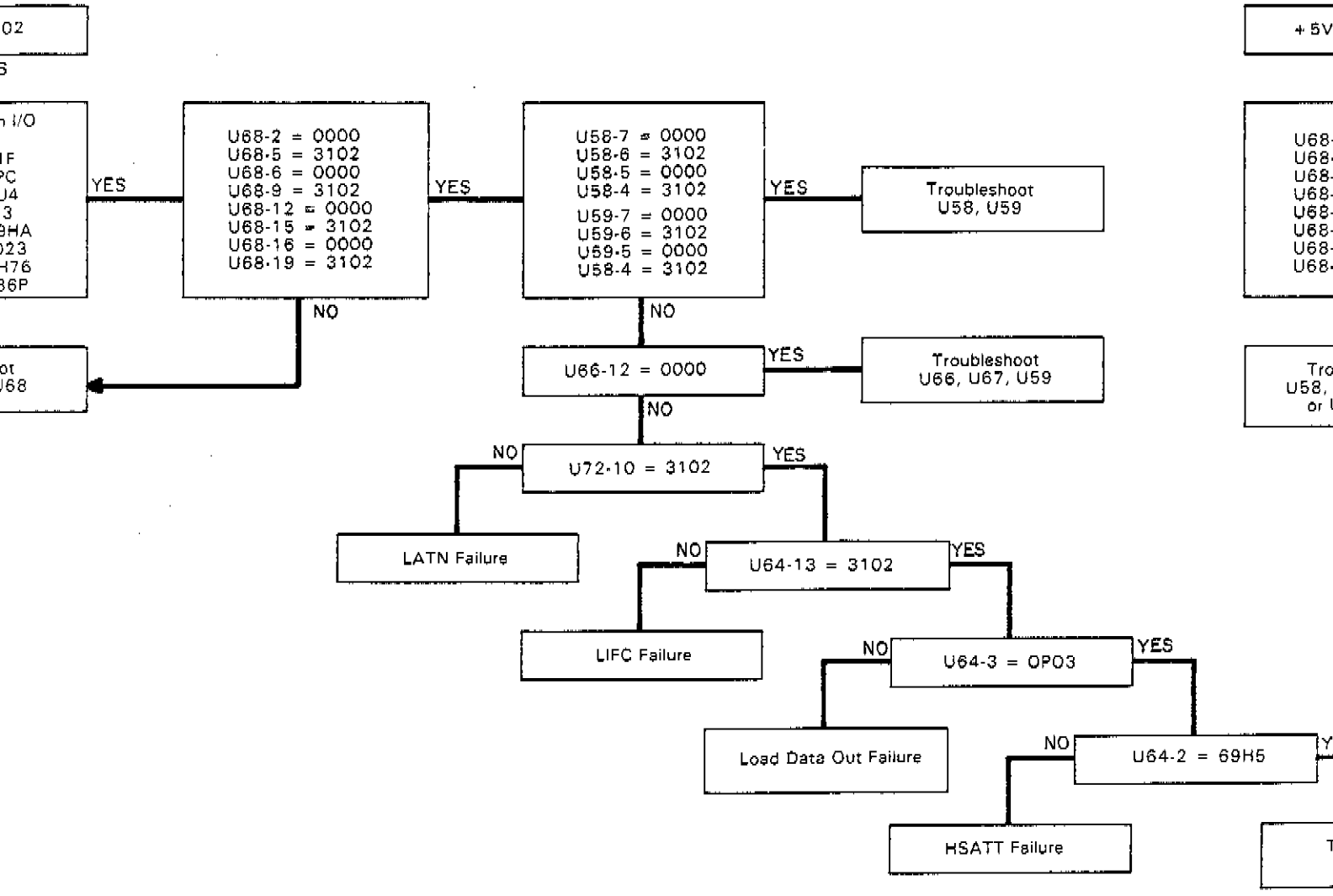

Fig 8-31c
Sht 3 of 3

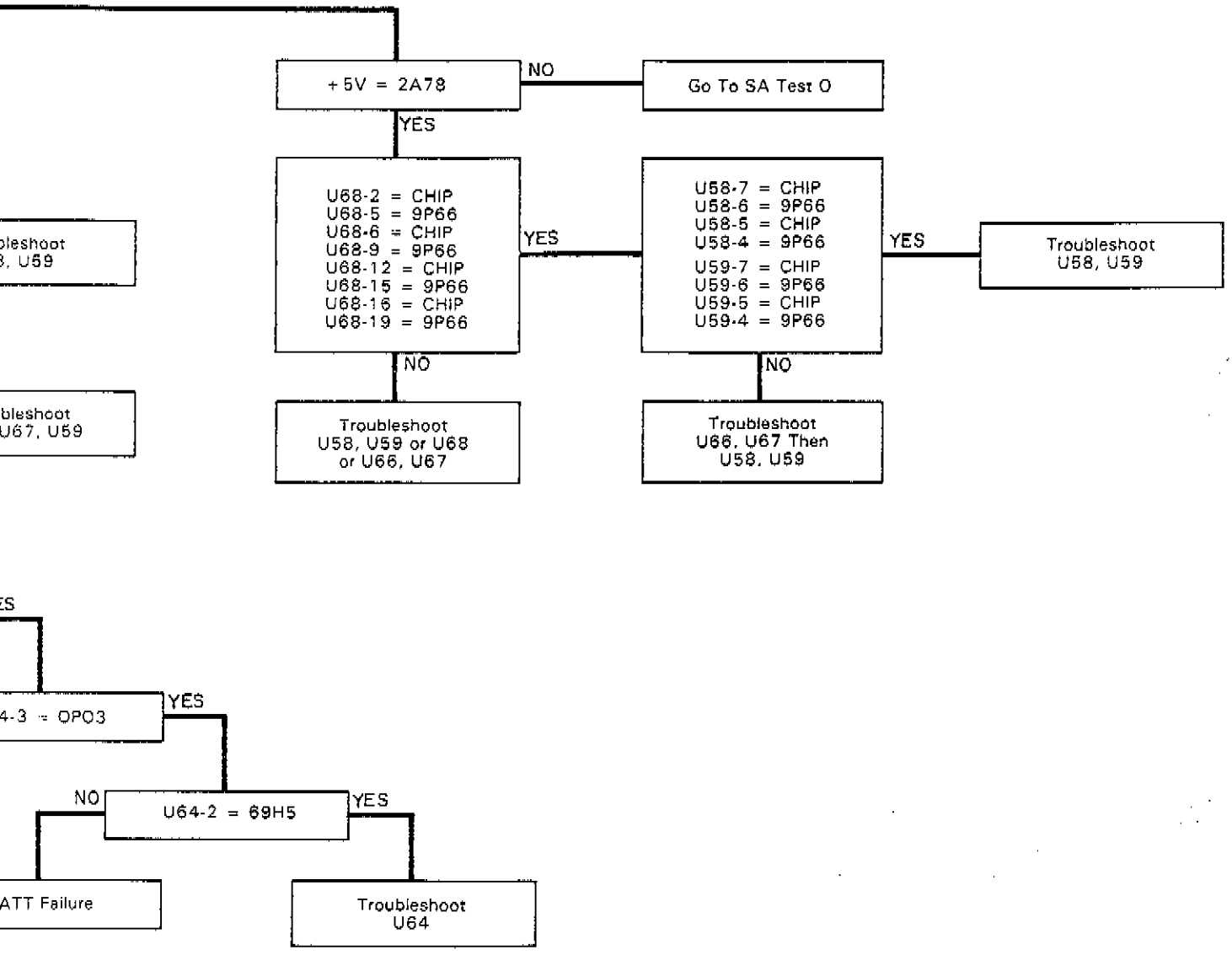

Figure 8-31(c). Signature Analysis Test 3.

Designator	Board Location
C1	G
C2	G
C3	G
C4	F
C5	G
C6	G
C7	G
C20	H
C21	H
C22	H
C23	H
C24	G
C25	G
C26	F
C27	F
C28	E
C29	E
C30	E
C31	E
C32	D
C33	D
C34	D
C35	C
C36	H
C37	H
C38	C
C39	B
C40	B
C41	G
C52	C
C53	A
C54	A
C55	A
C56	A
C57	A
C58	C
C59	C
C60	C
C61	B
C62	B
CR1	F
CR2	H
CR4	C
CR5	C
J1	F
J2	D
J3	D
J4	D
J51	A
L1	G
L2	F
L3	F

Designator	Board Location
P52	A
Q1	D
Q2	D
R1	G
R2	G
R3	G
R4	G
R5	F
R6	G
R7	F
R8	F
R9	C
R10	D
R13	G
R14	D
R15	C
R16	C
R17	C
R18	B
R19	E
R20	D
R21	C
R22	C
R23	C
R24	C
R25	C
R26	F
R51	B
R52	C
R53	A
R54	C
R55	C
S1	B
Test Points	
1	G
2	C
3	F
4	C
5	D
7	C
51	A
52	A
53	A
54	A
GND	D
GND	H
SA CLK	G
SA S/S	F
STBY	A

Designator	Board Location
T/N	G
CS0	G
CS1	G
CS2	G
U1	H
U2	H
U3	H
U4	H
U5	H
U6	H
U7	H
U8	G
U9	G
U10	G
U11	G
U12	G
U13	G
U14	G
U15	F
U16	F
U17	F
U18	F
U19	F
U20	F
U21	F
U22	F
U23	F
U24	F
U25	E
U26	E
U27	E
U28	E
U29	E
U30	E
U31	E
U32	D
U33	D
U34	D
U35	D
U36	D
U37	D
U38	D
U39	D
U40	D
U41	D
U42	D

Designator	Location
U43	C
U44	C
U45	H
U46	H
U51	C
U52	C
U53	C
U54	C
U55	C
U56	C
U57	B
U58	B
U59	B
U60	B
U61	B
U62	B
U63	B
U64	B
U65	B
U66	A
U67	A
U68	A
U69	A
U70	A
U71	A
U72	A
U73	A
U74	A
U75	C
V1	A
W1	B

Fig 8-32
Sht 4 of 5

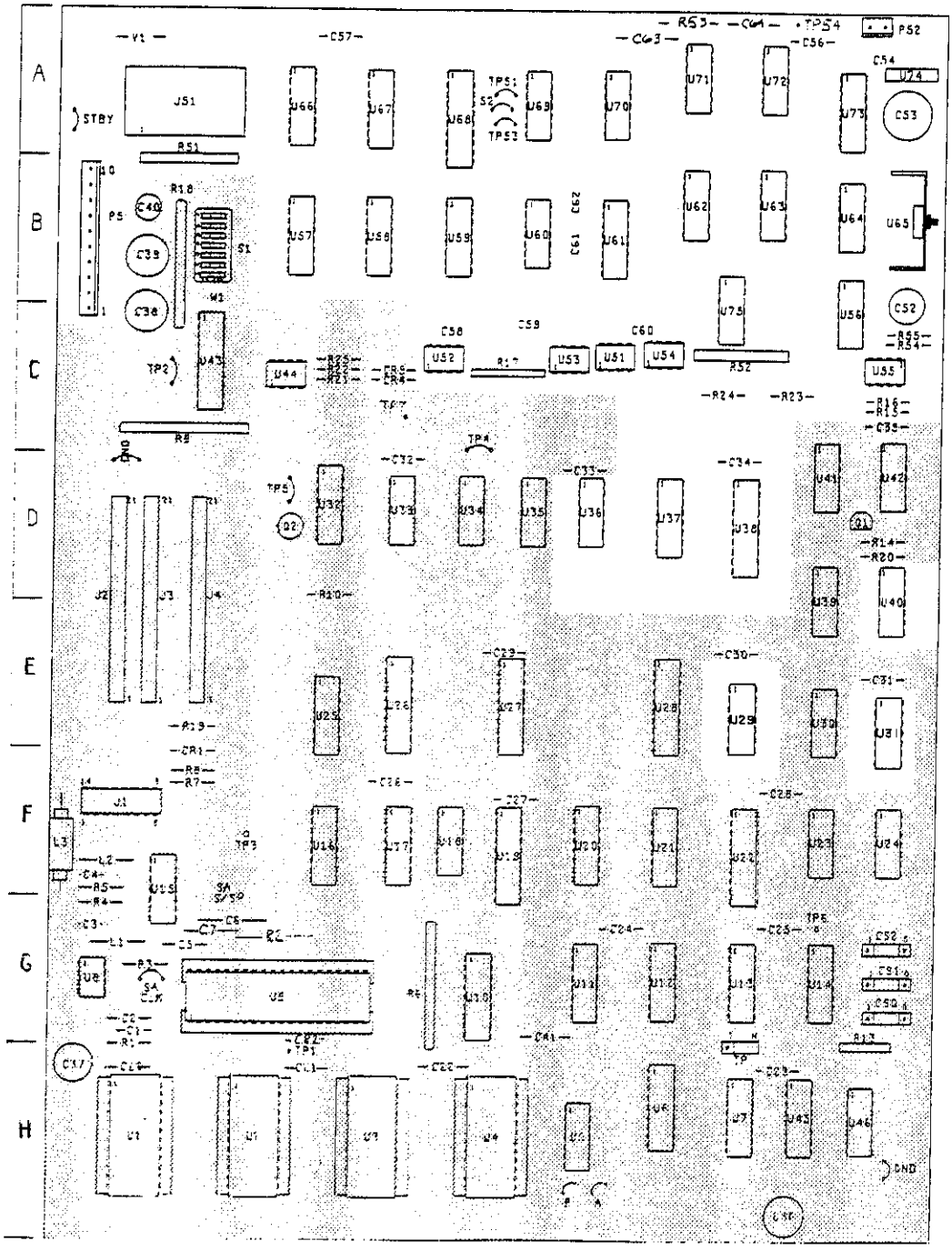

A6
03325-66506
Rev C

Note: Should replacement of A6 become necessary, see paragraph 8-113.

Fig 8 33b
Sht 3 of 3

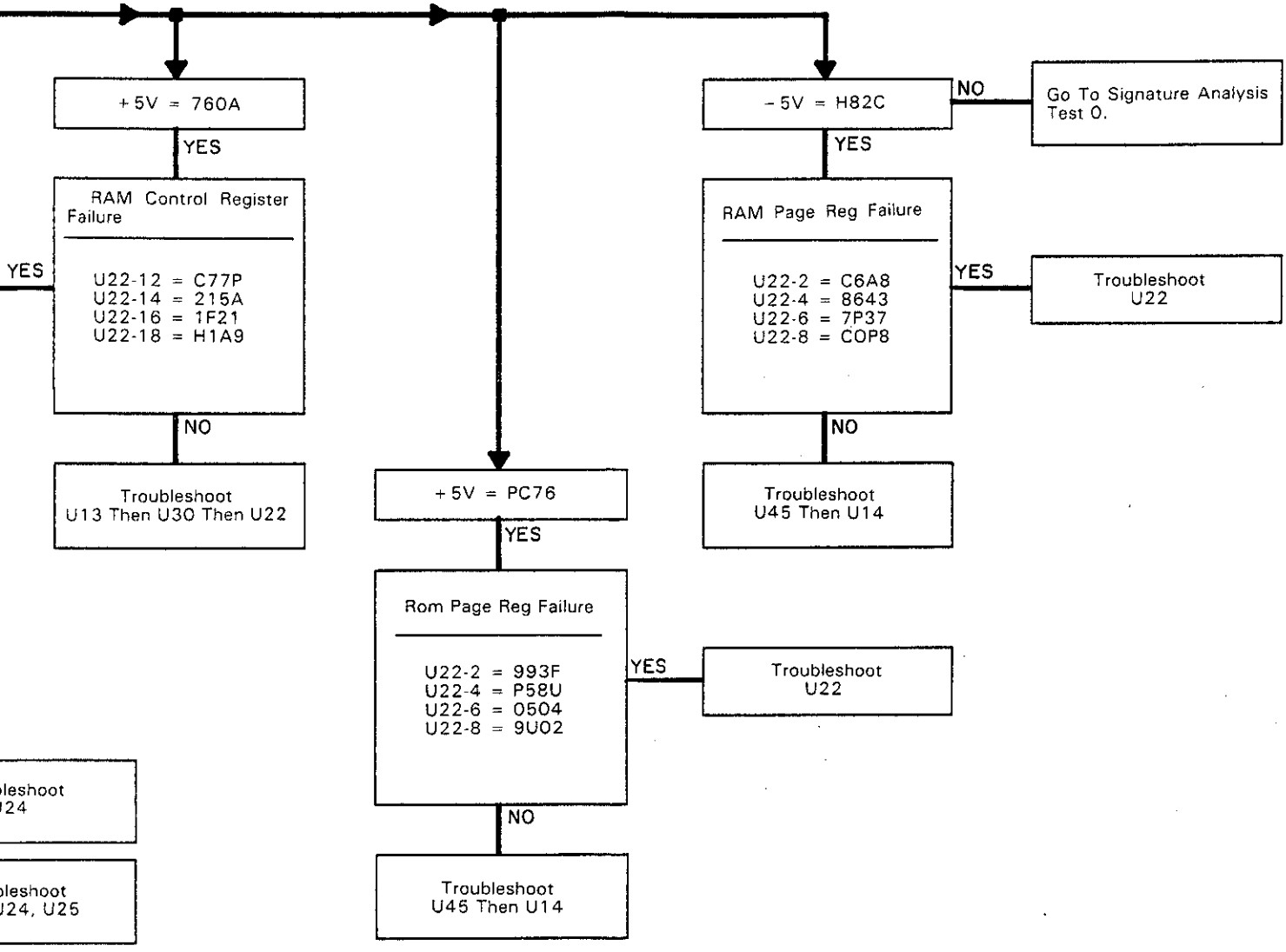

Figure 8-33(b). Signature Analysis Test 1.
8-C-21/8-C-22

Fig 8-32
Sht 3 of 5

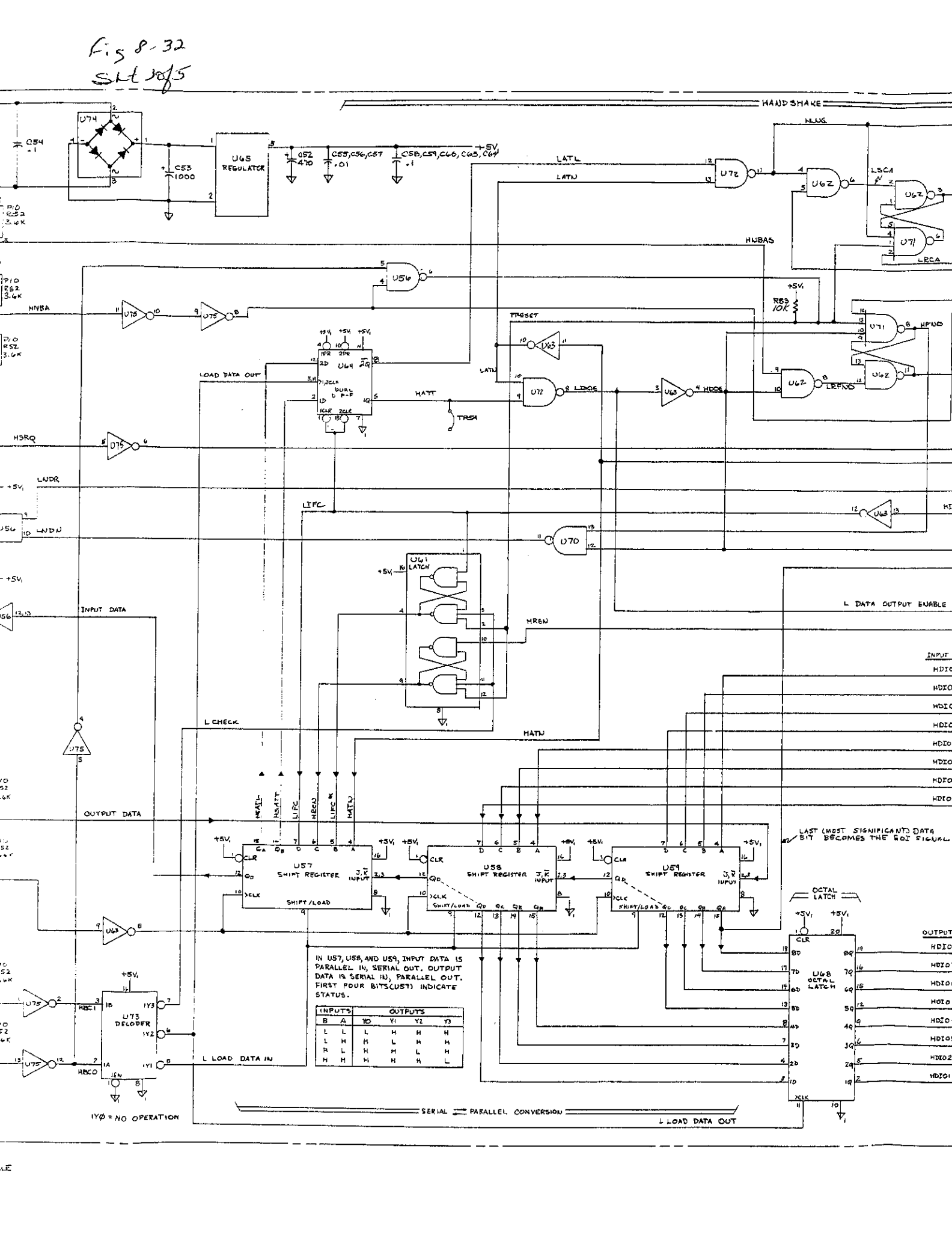

Fig 8-32
Sht 4 of 5

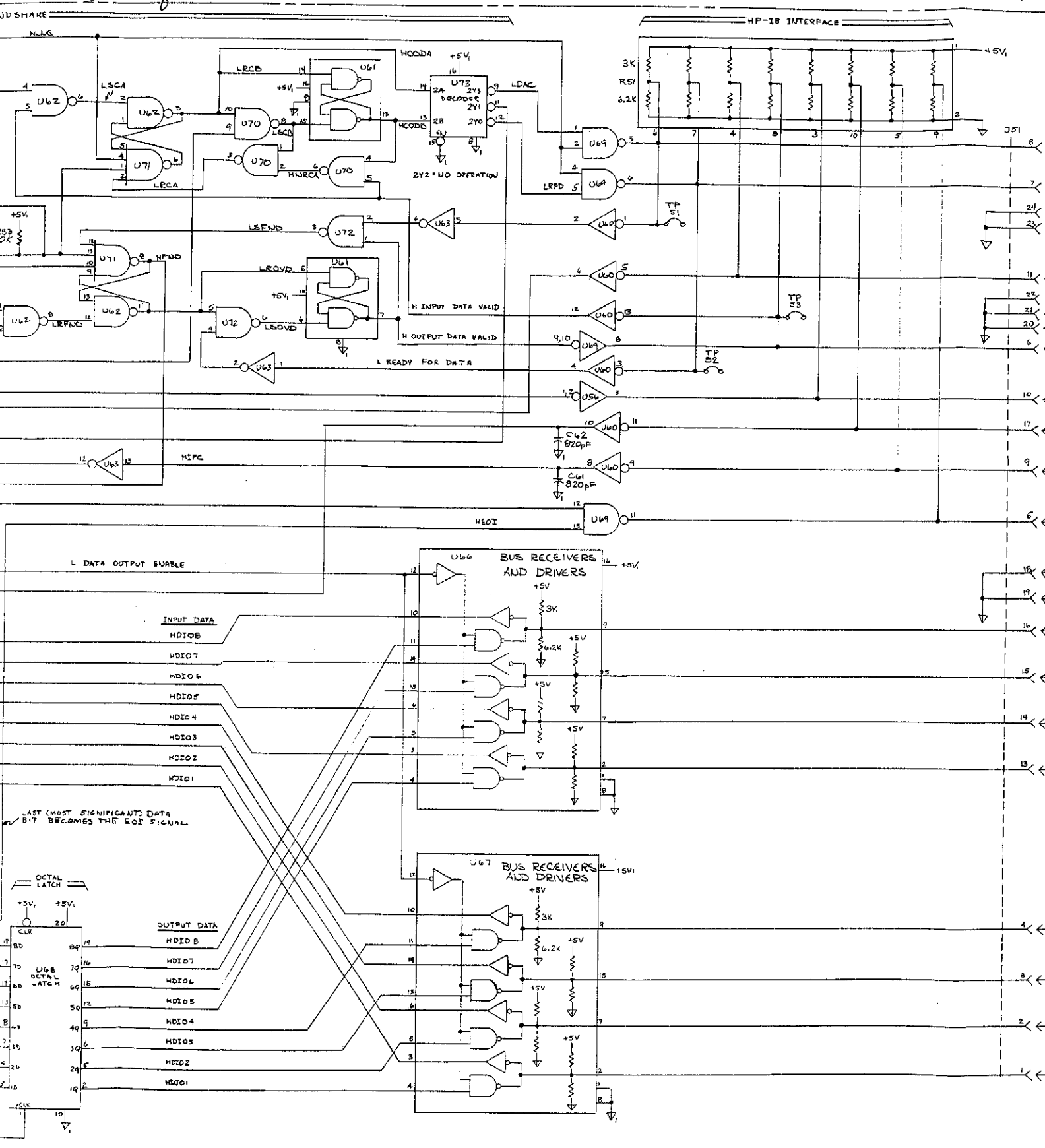

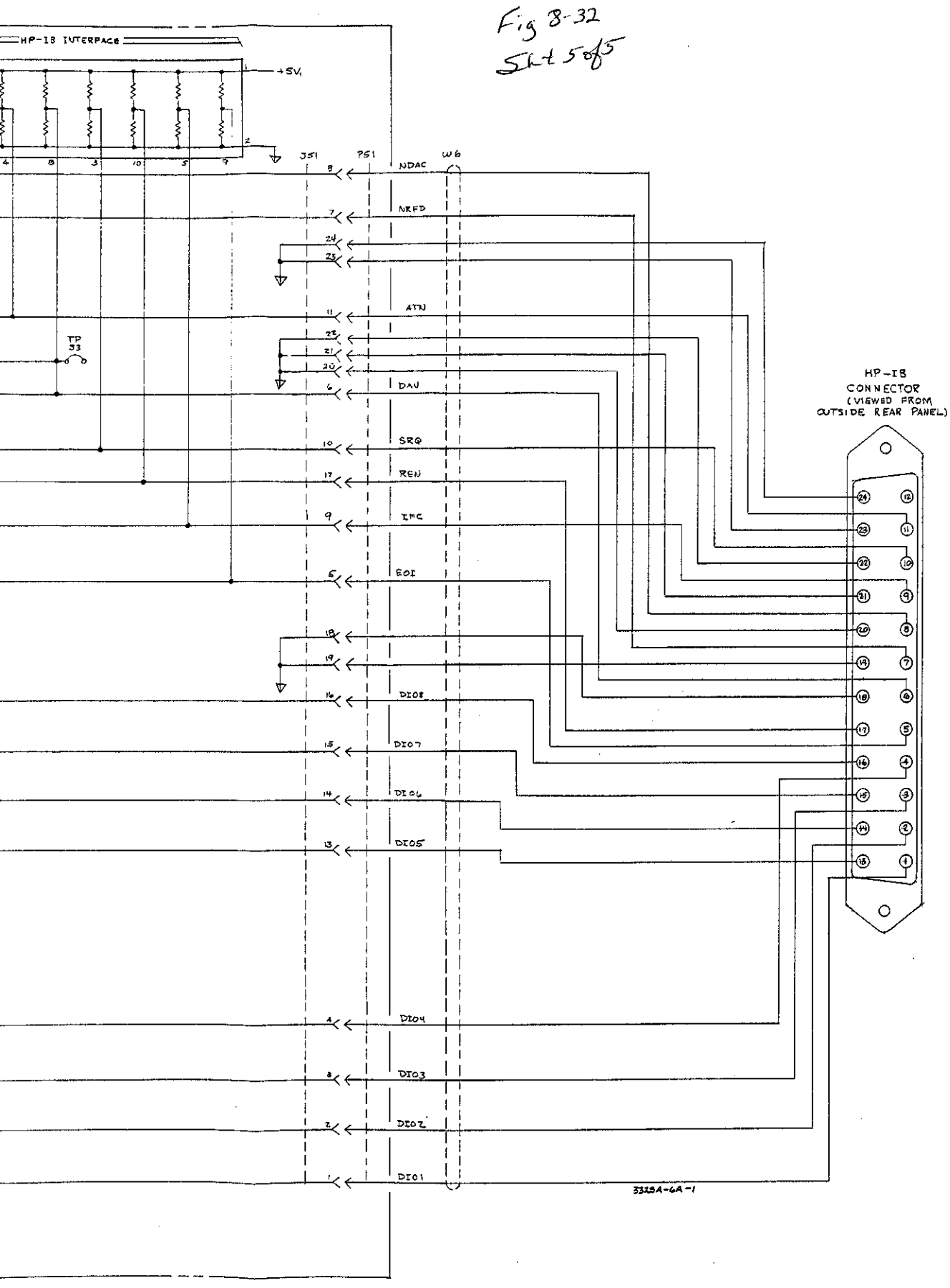

Figure 8-32. HP-IB Circuits, A6.

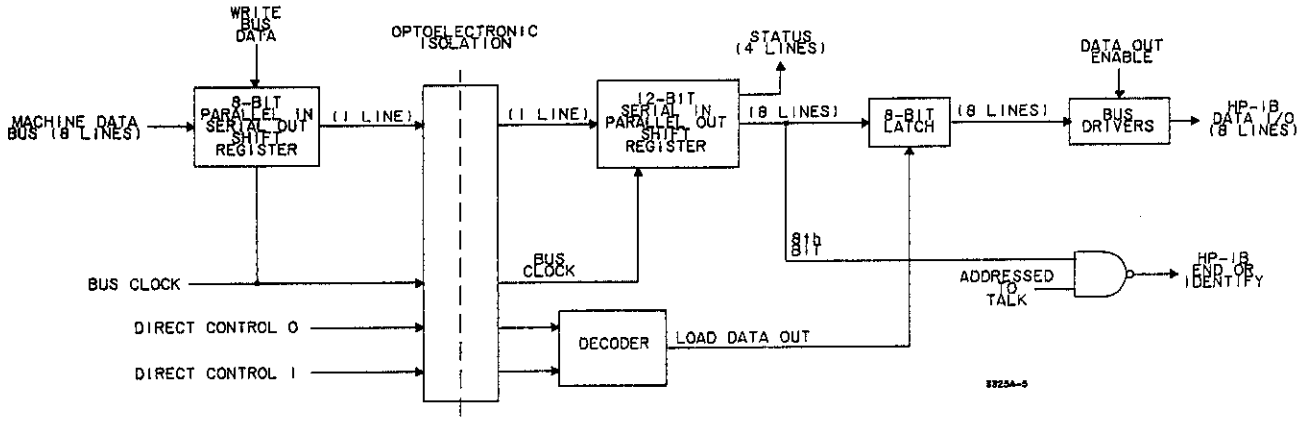

HP-IB Data Input Path

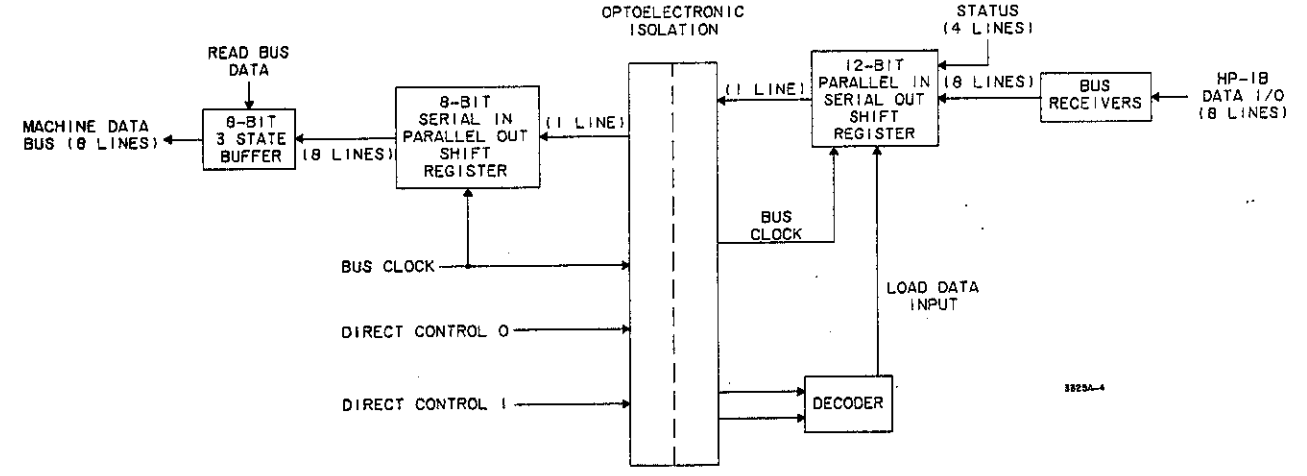

HP-IB Data Output Path

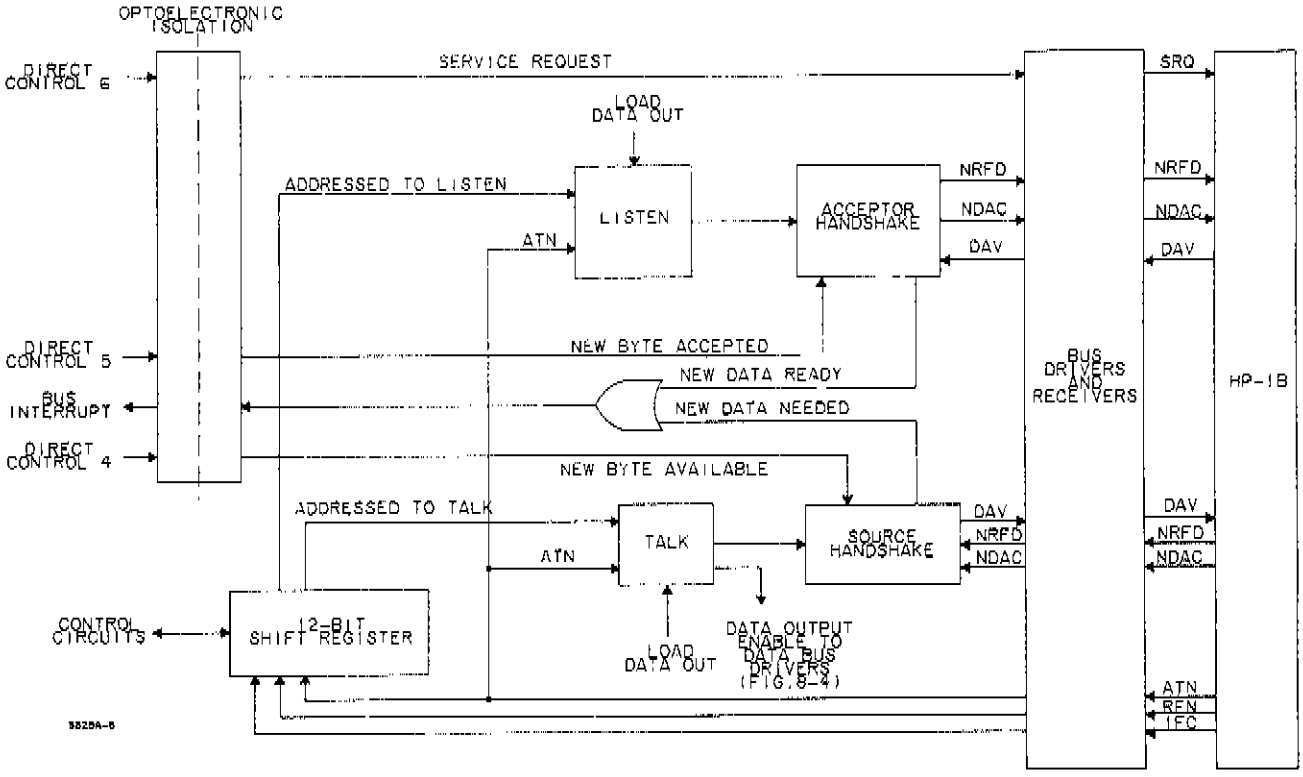

HP-IB Management and Handshake

SERVICE GROUP C - CONTROL CIRCUITS.

Troubleshooting Information.

The majority of problems which are isolated to the A6 board can be pinpointed through Signature Analysis. There are, however, a series of troubleshooting checks that can be made prior to running the SA tests. The checks, common failures, and brief descriptions of the SA tests are presented below.

1. Begin troubleshooting by checking the 1.2MHz oscillator circuitry for the correct frequency.

2. Should the instrument not turn on properly or respond to inputs, the problem could be with the processor. A check of the nanoprocessor (U9) can be made by disconnecting the A6 board from the A21 (A1) Frequency Synthesis board (W31, A6J4 - A21J1). If "A - CAL FAIL" and "OSC FAIL" are then displayed, a significant portion of the processor circuitry is working.

3. A further check of the nanoprocessor is to first disable the buffer (U10) by opening switch S1G. This enables a +5V level to be present on each of the lines in the data bus. When the processor samples each data line, the +5V is interpreted as a "no operation" instruction. The processor then increments the ROM address and the process repeats. Using an oscilloscope, monitor the ROM address lines. Note that the lines should be counting at one-half the frequency of the previous line.

4. Again, should the instrument not respond properly at turn on, check that the "turn on interrupt request" is coming from A6Q1 and U41 pin 6. This interrupt should also appear at U35 pin 2.

5. A6U18 and A6U19 because of marginal conditions, are a common cause of "OSC FAIL" and "A - CAL FAIL".

6. Check the position of ROM select switches CS0-CS2. During normal operation (when SA is not being performed), the switches must be in their center position. Note also that the "Normal/Test" jumper used during SA sould be returned to the "Normal" position following the tests.

7. Jumper W1 is in place in standard instruments. W1 is clipped when the High Voltage option is installed. If the instrument is configured with the option but will not accept inputs greater than 10Vp-p, check that W1 was not resoldered.

8. The nanoprocessor U9, though often replaced, is not always at fault. Because U9 (1820-1691) is a MOS device, care should be taken when handling so as not to create punch-through damage due to static electricity. If U9 is replaced, insure that A6R8 is 9.53kΩ. Δ2

9. The 1ms one shot (U8) interrupts the processor at 1ms intervals to check the front panel for switch closures and to refresh the front panel display. Signatures from U8 may vary from one instrument to the next due to U8 being an analog device. Any signatures, therefore, should be disregarded.

10. The following SA tests are available for checking the A6 assembly. Note that when running the tests and using the bus address switch pack on the A6 board, use the logic levels and switch numbers printed on the PC assembly. Disregard the numbers printed on the pack itself.

ROM Test: Checks the ROMs, processor, and buffer.

SA Test 1: Checks the data path from the processor to the machine data bus and back.

SA Test 2: Checks the RAM address counter and the RAMs.

SA Test 3: Checks the HP-IB path from the processor to the HP-IB connector and back. (See Service Group B.)

SA Test 4: Checks the processor's ability to identify front panel switch closures and stuck switches. It also checks the A5 LED drivers, current sources, and digital circuits. (See Service Group A.)

SA Test 5: Checks the path from the processor to the Fractional-N chip. It also checks the interrupt lines, carry/sweep limit flag path, VCO lines, and the turn on circuit.

SA Test 0: Used after all other tests have failed to isolate the problem. During this test, the processor sends digital signals to all points on the A6 board so that signatures can be taken. This test should be used with the schematic so that bad signatures can be traced to their origin.

Signature analysis is not effective when trying to isolate a problem that is intermittent. If it can be determined that the intermittent symptom is originating from the A6 board, one should try to make the symptom a hard failure through heat, cold, vibration or mild shock. If the symptom remains intermittent and one is certain that it is tied to the A6 assembly, then the board should probably be replaced.

ROM SIGNATURE ANALYSIS TEST.

Use this test if Signature Analysis Tests 1, 2, and 3 cannot be entered. This test checks the ROM's (A6U1-4), the processor (A6U9), and the buffer (A6U10). If these components are not operating properly, the remaining Signature Analysis tests will not work.

Procedure.

a. Set 3325A POWER switch to STBY.

b. Set all five bus address switches (A6S1) to OFF (O).

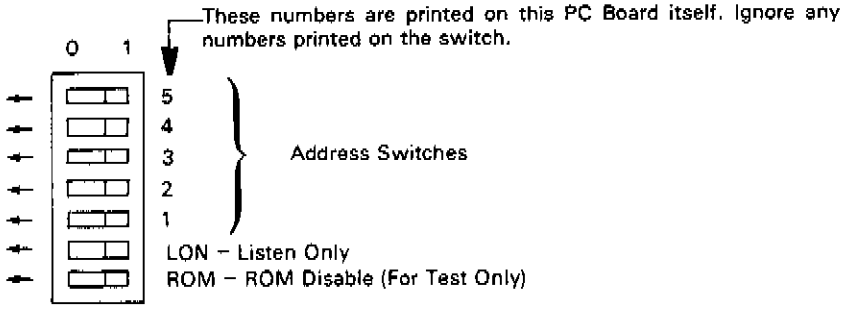

c. Set ROM Disable switch (A6S1) to OFF (O).

d. Move N/T (Normal/Test) shorting connector (located between U7 and 13) to T position.

e. CSØ through CS2 shorting connectors should be in the center position. (These are located near the right front corner of A6.)

f. Connect the signature analyzer as follows:

Clock ..... SA CLK (at left of A6U9)
Start and Stop CS2
(Test point next to CS2 shorting connector)

Ground ..... 3325A ground
(stiffener channel on deck between A6 and A21 or any Ground test point)

g. Set signature analyzer controls as follows:

Line ..... ON
Start ..... ⌐_ (in)
Stop ..... ⌐_ (in)
Clock ..... _/⌐ (out)
Hold ..... OFF
Self Test ..... OFF

h. Connect TP7 to ground.

i. Set 3325A POWER switch to ON.

j. Remove ground from TP7.

If the +5 V signature is 755U continue with Step k.

If the +5 V signature is not 755U go to Step m.

k. Place the signature analyzer probe on the following points on A6U1 and compare signatures to those below.

A6U1 Pin	Correct Signature	Data Line
9	6C1F	0
10	P326	1
11	5975	2
13	4533	3
14	5H79	4
15	83HU	5
16	U2FF	6
17	P2CC	7

If all of these signatures are correct, the ROM's have passed this test. Signature analysis tests Ø through 5 may now be performed.

If these signatures are not all correct, test each ROM individually as follows:

ROM 1 (U1) Test.

1. Move the CS1 and CS2 shorting connectors to the Ø position (toward edge of board).

2. Place the signature analyzer probe on the following points and compare the signatures.

A6U1 Pin	Correct Signature	Data Line
9	63F2	0
10	0U43	1
11	F60P	2
13	3854	3
14	3FFH	4
15	323F	5
16	4P71	6
17	9H43	7

ROM 2 (U2) Test.

1. Move CS 1 shorting connector to the 1 position and CS2 to the Ø position.

2. Place the signature analyzer probe on the following points and compare the signatures.

A6U2 Pin	Correct Signature	Data Line
9	4567	0
10	PCUC	1
11	PC2C	2
13	883F	3
14	6U72	4
15	H89H	5
16	02C6	6
17	9474	7

ROM 3 (U3) Test.

1. Move CS1 shorting connector to 0 and CS2 to 1.

2. Place the signature analyzer probe on the following points and compare the signatures.

A6U3 Pin	Correct Signature	Data Line
9	C3P4	0
10	P948	1
11	U145	2
13	C848	3
14	07UC	4
15	C602	5
16	05HF	6
17	23UP	7

ROM 4 (U4) Test.

1. Move CS1 and CS2 shorting connectors to 1.

2. Place the signature analyzer probe on the following points and compare the signatures.

A6U4 Pin	Correct Signature	Data Line
9	2968	0
10	694H	1
11	HU38	2
13	0A4C	3
14	377C	4
15	22UP	5
16	8266	6
17	2CH2	7

After completion of these tests, replace CS1 through CS2 shorting connectors to the center position.

Replace the N/T shorting connector to the N position. Set the ROM disable switch to 1.

l. If the signature in Step j is not 755U, check the voltage level of A6U42 pin 6 with the signature analyzer probe. It should be high. If not, momentarily ground U42 pin 3 to force pin 6 high. If it is still not high, troubleshoot A6U5, U14, and U42.

m. If the signature is still not 755U, examine the ROM address lines.

1. Set 3325A POWER to STBY.

2. Move signature analyzer Start and Stop leads to A6TP1 (in front of U9).

3. Place signature analyzer probe on + 5 V (logic 1).

4. Set 3325A POWER to ON.

If the signature is 826P, troubleshoot A6U14 (Chip Select Delay) and A6U15 (1.2 MHz Clock circuit).

If the signature is not 826P, examine the ROM address lines HRAØ through HRA10 at A6U1.

A6U1 Pin	Address Line
8	HRAØ
7	HRA1
6	HRA2
5	HRA3
4	HRA4
3	HRA5
2	HRA6
1	HRA7
23	HRA8
22	HRA9
19	HRA10

The frequency of the signal at HRA1 should be one-half that of HRAØ. HRA2 should be one-half of HRA1, etc., through HRA10. None of the address lines should be a constant level, and no two lines should be the same.

After completion of the test, replace the N/T shorting connector to the N position.

After completion of all signature analysis tests, make sure the ROM Disable switch (A6S1) is set to the ON (1) position.

SIGNATURE ANALYSIS TEST 0.

Use of this test is recommended after the ROM test or tests 1 through 5 have failed to isolate the faulty circuit. This test reads all the signatures on the A6 assembly, which are presented in tabular form. Close attention should be paid to the schematic diagrams in Service Groups B and C while using this test.

Procedure.

a. Set 3325A POWER switch to STBY.

b. Disconnect the flat cable to the attenuator assembly to prevent damage to the relays. Be sure to replace this cable carefully after completion of the test, making sure the cable is aligned properly in the connector.

c. Connect the signature analyzer as follows:

Clock ..... SA CLK (at left of A6U9)
Start and Stop ..... SA S/S (at right of A6U15)
Ground ..... 3325A ground
(stiffener channel on deck between A6 and A21, or any Ground test point)

d. Set the signature analyzer controls as follows:

Line ..... On
Start ..... ⌐_ (in)
Stop ..... ⌐_ (in)
Clock ..... _/‾ (out)
Hold ..... Off
SelfTest ..... Off

e. Place CSØ, CS1, and CS2 shorting connectors (near right front corner of A6) in the Ø position to select ROM 1.

f. Set the ROM Disable switch (A6S1) to ON (1). (See switch drawing below.)

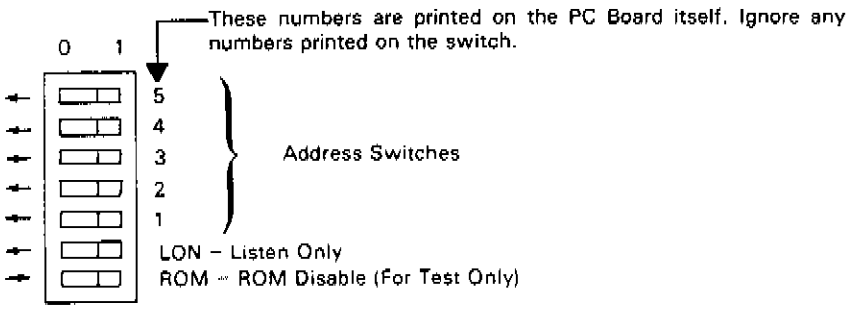

g. Connect A6TP3 (between U15 and U16) to ground. Do not disconnect this ground during this test.

h. Set 3325A POWER to ON.

i. Place the signature analyzer probe on +5 V (logic 1). The large plated area near the center of A6 is +5 V.

If the signature is FF32, proceed to Step j.

If the signature is not FF32, troubleshoot A6U9 and U10, the processor data lines HPDØ–7 and associated circuits. Refer to the ROM Signature Analysis Test.

j. Set all five Bus Address switches to OFF (O).

k. Place the signature analyzer probe on the points indicated in the tables and compare the signatures. If no stable or valid signatures are obtained, the ROM's (A6U1–4) or the processor (A6U9) may be at fault. Refer to the ROM Signature Analyzer Test.

Integrated circuits with designators greater than U55 are on the I/O side of the HP-IB isolators where the normal SA Clock is not available. In order to take these signatures, it is necessary to supply an external clock. Use the following procedure:

a. Set 3325A POWER to STBY.

b. Disconnect the signature analyzer from the SA CLK.

c. Unsolder the end of the SA CLK jumper nearest the left edge of the board (away from U9).

d. Apply 400 kHz square wave with the following characteristics to the SA CLK jumper:

Frequency	−400 kHz
Amplitude	4 V p-p
DC Offset	+2 V

Connect the pulse generator ground to A6 ground (jumper in right front corner of the board). The -hp- Model 3312A may be used as the pulse generator.

e. Connect a clip lead across A6V1 to short the isolated ground to circuit ground.

f. Make sure A6TP3 remains grounded.

g. Connect the signature analyzer Clock lead to the raised SA CLK jumper (along with the pulse generator).

h. Set 3325A POWER to ON.

i. Adjust the pulse generator frequency until a stable, gated signature is obtained, indicating that the signature analyzer is triggering on the external clock signal. (The GATE indicator should be flashing and the UNSTABLE SIGNATURE indicator should be off.)

j. Place the signature analyzer probe on the points indicated in the table for IC's with designators U56 and greater. Compare the signatures to the correct signatures in the table.

NOTE

After completion of tests, be sure to replace all cables, switches, connectors, and jumpers to the normal position.

Signature Analysis Test 0.

Pin	U1 through U4	U5	U6	U7	U8	U9
1	OHCO	FF32	C475	FF32	OOOO	68CC
2	H52C	88U7	66P6	7515	AF1P	2H70
3	3HA4	44F5	F342	C927	—	FH4P
4	2F5H	OOOO	AH4F	77F7	FF32	159U
5	159U	88U7	9581	U237	FF32	2F5H
6	FH4P	FF32	2H79	41PH		3HA4
7	2H7O	OOOO	7C1O	8HHU		H52C
8	68CC	44F5	71H5	OOOO	FF32	OHCO
9	1C2P	FF32	OOOO	O75A		FF32
10	PC97	88U7	FA47	3F37		FF32
11	68AF	OOOO	UPF8	UOO5		FF32
12	OOOO	FF32	P8F2	7OUC		7U44
13	1C71	FF32	1UA2	64U1		7A54
14	1P24	FF32	U83F	OOOO		6CF2
15	P4AH		8HHU	H62P		UPUH
16	467P		7515	FF32		075A
17	A12C		P476			OOOO
18	OOOO		FF32			U83F
19	FF32					1UA2
20	OOOO (U1 and U3) FF32 (U2 and U4)					P8F2
21	OOOO					UPF8
22	FF32					C67C
23	FF32					152U
24	FF32					7UC6
25						21P3
26						88U7
27						
28						OOOO
29						FF32
30						OOOO
31						OOOO
32						FUO6
33						4UFF
34						14UH
35						
36						6OPP
37						U655
38						OOOO
39						FF32
40						FF32

Pin	U10	U11	U12	U13	U14	U15
1	44F5	AH4F	AH4F	FF32	FF32	
2	1C2P	7C1O	7C1O	AO29	3P9A	
3	U83F	2H79	2H79	6F1C	2963	
4	PC97	9581	9581	C67C	O1A6	
5	1UA2	66P6	66P6	152U	2AU8	
6	68AF	C475	C475	593U	1104	
7	P8F2	P476	P476	950H	22A9	OOOO
8	1C71	OOOO	OOOO	OOOO	OOOO	FC68
9	UPF8	U83F	C67C	AC69	OOOO	O75A
10	OOOO	1UA2	152U	62FP	3C7U	O75A
11	C67C	P8F2	7UC6	APUF	22A9	FC68
12	1P24	UPF8	21P3	7UC6	CU57	FF32
13	152U	UA22	46P4	21P3	2AU8	OOOO
14	P4AH	FA47	FA47	95C2	3P9A	FF32
15	7UC6	F342	F342	5980	3566	
16	467P	FF32	FF32	FF32	FF32	
17	21P3					
18	A12C					
19	44F5					
20	FF32					

Pin	U16	U17	U18	U19	U20	U21
1	UPUH	UPUH		FF32	1UA2	152U
2	6CF2	6CF2		9581	2H79	66P6
3	7A54	7A54		77F7	9581	F342
4	7U44	OOOO		2H79	P7U2	4AF8
5				U237	UP89	1CF8
6	O75A	7U44		7C1O	7C1O	C475
7	515P	9A92		7OUC	AH4F	P476
8	OOOO	OOOO		AH4F	OOOO	OOOO
9	C982	A42C		64U1	UPF8	21P3
10	1AUO	6F55	H6F2	OOOO	P8F2	7UC6
11	973C	4HAU	1AUO	8375	H5P4	H5P4
12	3P18	H4FH	5CO9	F342	1CF8	2A9P
13	565H	FA47	973C	UUCU	4AF8	FF32
14	7FA5	H5P4	FF32	66P6	OOOO	OOOO
15	O9P9	AC69		3797	U83F	C67C
16	FF32	FF32		C475	FF32	FF32
17				783U		
18				P476		
19				FF32		
20				FF32		

Pin	U22	U23	U24	U25	U26	U27
1	FF32	0675	075A	UPUH	075A	FF32
2	1104	5980	AC69	6CF2	77F7	77F7
3	77F7	UP89	FF32	7A54	U83F	U83F
4	01A6	0675	075A	7U44	U237	1UA2
5	U237	62FP	H5P4		1UA2	U237
6	2963	P7U2	FF32	FC68	7OUC	7OUC
7	7OUC	OOOO	OOOO	FF32	P8F2	P8F2
8	UP1P	UA22	H5P4	OOOO	64U1	UPF8
9	64U1	AO29	FC68	FF32	UPF8	64U1
10	OOOO	0675	H5P4	FF32	OOOO	OOOO
11	8375	FA47	AC69	FF32	C67C	H4FH
12	AO29	0675	FC68	FF32	8375	8375
13	UUCU	075A	AC69	075A	152U	C67C
14	950H	FF32	FF32	FF32	UUCU	152U
15	3797			FF32	7UC6	UUCU
16	62FP			FF32	3797	3797
17	783U				21P3	7UC6
18	5980				783U	21P3
19	FF32				075A	783U
20	FF32				FF32	FF32

Pin	U28	U29	U30	U31	U32	U33
1	OOOO	14UH	H4FH	A42C	FF32	FF32
2	77F7	14UH	075A	FF32	1FP9	FF32
3	77F7	4131	H397	FF32	HOHC	OOOO
4	U237	872A	950H	A42C	8375	FC68
5	U237	36HC	0675	64U1	UUCU	9A92
6	7OUC	PUP9	46P4	AF1P	7916	075A
7	7OUC	OOOO	OOOO	OOOO	C524	OOOO
8	64U1	F5HC	0675	FF32	OOOO	FF32
9	64U1	FF32	FA47	FF32	A42C	A42C
10	OOOO	H6UC	FF32	FF32	4319	OOOO
11	8375	CFU7	H4FH	14UH	8U2C	OOOO
12	8375	CAH7	H397	14UH	3797	FF32
13	UUCU	HO85	075A	14UH	FF32	FF32
14	UUCU	FF32	FF32	FF32	OOOO	FF32
15	3797				FF32	
16	3797				FF32	
17	783U					
18	783U					
19	OOOO					
20	FF32					

Pin	U34	U35	U36	U37	U38	U39
1	FF32	FF32	HUC5	3P18	FF32	
2	0000	0000	1387	09P9	H085	HOHC
3	4HAU	77F7	FU06	64U1	77F7	
4	FF32	FF32	0334	70UC	CAH7	3300
5	0000	3300	F5HC	U237	U237	H56C
6	FF32	U237	09P9	77F7	CFU7	8U2C
7	0000	0000	0000	HUC5	70UC	0000
8	P670	70UC	FF32	0000	H6UC	0675
9	39A5		0000	1387	64U1	075A
10	FF32	FF32	3A67	0000	0000	FC68
11	39A5	64U1	U655	783U	8375	H397
12	FF32		AFHF	3797	PUP9	075A
13	AF1P	FF32	60PP	UUCU	UUCU	0000
14	FF32	FF32	FF32	8375	36HC	FF32
15				0000	3797	
16				FF32	872A	
17					783U	
18					4131	
19					FF32	
20					FF32	

Pin	U40	U41	U42	U43	U44	U45
1	8755		FF32	FF32	0000	FF32
2	4C67	3300		FF32	0000	AC69
3	0000	0000	FF32	77F7	0000	U83F
4	FF32	0000	FF32	FF32	0000	1UA2
5	09P9	0000		U237	0000	P8F2
6	F5HC	FF32		FF32	0000	UPF8
7	0000	0000	0000	70UC	FF32	0000
8		0000	98F4	FF32	0000	0000
9		FF32	54U6	64U1		0000
10	FF32	54U6	AC69	0000		0000
11	FF32			8375		UP1P
12	FF32		0000	FF32		2963
13	0000	4967	FF32	UUCU		01A6
14	FF32	FF32	FF32	FF32		1104
15				3797		0000
16				FF32		FF32
17				783U		
18				*FF32		
19				FF32		
20				FF32		

*FF32 W/O Jumper, 0000 W/Jumper

NOTE

For signatures on U51 and above, circuitry is HP-IB. Refer to test zero procedure.

Pin	U46	U51	U52	U53	U54	U55
1	FF32	FF32	FF32	FF32	FF32	FF32
2	0000	FF32	AFHF	0334	09P9	14UH
3	FF32	83UP	3A67	FF32	1387	5AUH
4	0675	0000	FF32	FF32	FF32	FF32
5	3F37	0000	0000	0000	0000	0000
6	71H5	83UP	3A67	FF32	1387	14UH
7	0000	0000	AFHF	0334	09P9	5AUH
8	FF32	FF32	FF32	FF32	FF32	FF32
9	0000					
10	FF32					
11	0000					
12	0000					
13	0000					
14	FF32					

Pin	U56	U57	U58	U59	U60	U61
1	0000	FF32	FF32	FF32	HOH5	FF32
2	0000	90HP	1HO1	1387	1FP7	23F5
3	FF32	90HP	1HO1	1387	H3U3	4P25
4	0334	0000	6HO3	6HO3	1UF1	FF32
5	3A67	FF32	0000	4HF9	FF32	83UP
6	23F5	6HP0	20FA	20FA	0000	FF32
7	0000	FF32	6HO3	20FA	0000	83UP
8	5AUH	0000	0000	0000	0000	0000
9	3U30	C870	C870	C870	FF32	6HP0
10	65FH	F5HC	F5HC	F5HC	0000	0000
11	14UH	14UH	5FPF	H133	FF32	4P25
12	H8FU	H8FU	90HP	1HO1	83UP	23F5
13	H8FU	OO3C	3F19	1710	4UFF	PFF3
14	FF32	P63F	1P82	F955	FF32	1UF1
15		F5CC	U5A1	CH13		20U1
16		FF32	FF32	FF32		FF32

Pin	U62	U63	U64	U66	U67	U68
1	2OU1	1UF1	FF32	OOOO	OOOO	FF32
2	4UFF	H3U3	P63F	PFU8	A131	A961
3	1UF1	96FU	2PFC	2OFA	6HO3	9OHP
4	UO24	5AUH	FF32	F129	A961	3F19
5	83UP	1FP7	5AUH	6932	8U58	8U58
6	4UFF	HOH5	96FU	2OFA	2OFA	4P71
7	OOOO	OOOO	OOOO	PFU8	PFU8	1P82
8	4UFF	F5HC	3F16	OOOO	OOOO	U5A1
9	83UP	O9P9	UO24	A131	A131	362P
10	5AUH	FF32	FF32	6HO3	6HO3	OOOO
11	83UP	OOOO	2PFC	5861	362P	2PFC
12	4UFF	FF32	F5CC	96FU	96FU	F129
13	3U3O	OOOO	FF32	U7O7	4P71	1HO1
14	FF32	FF32	FF32	4HF9	OOOO	171O
15				81UC	FF32	6932
16				FF32	FF32	U7O7
17						F955
18						CH13
19						5861
20						FF32

No signatures for U65

Pin	U69	U70	U71	U72	U73	U75
1	2OU1	2OU1	23F5	83UP	OOOO	AFHF
2	UO24	CFFP	PFF3	HOH5	U655	6OPP
3	HOH5	PFF3	FF32	CFFP	6OPP	U655
4	UO24	PFF3	UO24	H3U3	14AF	3A67
5	1UF1	83UP	1UF1	83UP	C87O	FF32
6	H3U3	CFFP	2OU1	FF32	2PFC	OOOO
7	OOOO	OOOO	OOOO	OOOO	4P25	OOOO
8	4UFF	2OU1	3U3O	96FU	OOOO	O334
9	83UP	O334	83UP	5AUH	2OU1	FUO6
10	83UP	1UF1	5AUH	FF32	FF32	FUO6
11	7811	65FH	FF32	UO24	3U3O	O334
12	5AUH	5AUH	CFFP	3F16	1UF1	U655
13	CH13	3U3O	23F5	FF32	PFF3	3A67
14	FF32	FF32	FF32	FF32	1UF1	FF32
15					OOOO	
16					FF32	

No Signatures for U74

SIGNATURE ANALYSIS TEST 1.

This test checks the data paths between the processor and machine data bus through A6U13, U20, U21, U26, U27, U28, and U45. It also checks the enable signals to these IC's.

This test uses two methods of signature analysis. The main difference between these methods is:

Method 1 tests a repetitive data stream for a fixed period of time and generates a single stable signature.

Method 2 tests a logical 1 (+5 V) for several periods of time, which are determined by the 3325A processor in response to the errors it has sensed or the test routine that has been programmed. Each situation produces a unique stable signature.

Use the following procedure:

a. Set the 3325A POWER switch to STBY.

b. Disconnect the flat cable to the attenuator assembly to prevent damage to the relays.

c. Connect the signature analyzer as follows:

Clock ..... SA CLK (at left of A6U9)
Start and Stop ..... SA S/S (at right of A6U15)
Ground ..... 3325A ground
(stiffener channel on deck between A6 and A21, or any Ground test point)

d. Set the signature analyzer controls as follows:

Line ..... On
Start ..... ⌐‾ (in)
Stop ..... ⌐‾ (in)
Clock ..... _⌐ (out)
Hold ..... Off
Self Test ..... Off

e. Place CSØ through CS2 shorting connectors (near right front corner of A6) in the O position to select ROM 1.

f. Set the ROM Disable switch (A6S1) to ON (1). (See switch drawing below.)

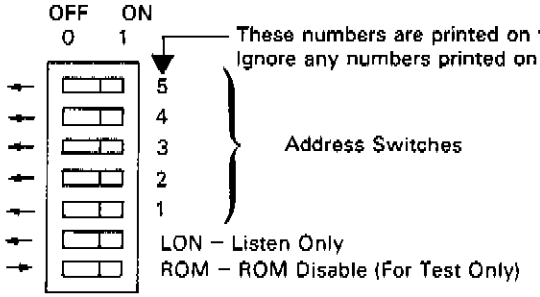

g. Connect A6TP3 (between U15 and U16) to ground.

h. Set 3325A POWER to ON.

i. Remove ground from A6TP3.

j. Place the signature analyzer probe on +5 V (logic 1). The large plated area near the center of A6 is +5 V.

If the signature is 5159, proceed to Step k.

If the signature is not 5159, troubleshoot A6U9 (processor), A6U10 (buffer), the processor data lines HPDØ–7, and associated circuits. Refer to the ROM Signature Analysis Test.

k. Set bus address bit 1 switch to ON(1), and set switches 2 through 5 to OFF.

l. The signature should be HCH5 as indicated at the START of the flow diagram. If it is not HCH5, go to the section of the diagram headed by the signature actually observed. If no stable signature or none of the signatures shown are observed, go to the ROM Signature Analysis Test. If Test 1 passes successfully, go to Signature Analysis Test 2. The tests associated with each signature heading are described as follows:

HCH5 – This test verifies that data can be successfully transmitted to and from the processor via the machine bus data latch (U27) and buffer (U28). It also tests U13 and U45.

6PCP – This signature indicates a failure of the machine data bus. A 1010 data signal is sent from the processor on the bus through U27, U28, and U26, and read back into the processor. This test checks data paths, clocks, and enabling signals.

AHHC – This test is identical to that for signature 6PCP except that a different data structure is used (0101). Since 6PCP was not displayed, the clocks and enabling signals are assumed to be correct.

AU96 – This test reads data through U20 and U21 to the address lines of U19. Data from U19 is then sent via U26 back to the processor, U9. This test also checks the enable signals to U20, U21, and U19. U26 is presumed to be good since it did not fail in previous tests.

HHCH – This test is identical to that for signature AU96 except that a different address (1010 as opposed to 0101) is sent to U19.

3AHH – This test sends data through U13 and U22 and tests the enable signals to these IC's.

760A – This test is identical to 3AHH except that it uses a different data stream.

PC76 and H82C – These tests send data to U22 via U45. Enable signals should be good since they did not cause a 760A signature.

m. When incorrect signatures are encountered, troubleshoot the circuits indicated on the flow diagram.

n. Following a repair indicated by this test, repeat the test beginning at START to determine if there are any other problems that could be detected by this test.

NOTE

After completion of tests, be sure to replace all cables, switches, connectors, and jumpers to the normal position.

NOTES

1. A constant interrupt (low) at TP5 may be circumvented by:

a. Set POWER to STBY.
b. Unsolder one end of TP5.
c. Set POWER to ON.
d. Momentarily short across TP5.

2. To isolate the control board (A6) from the other assemblies, disconnect the long flat cable going to the keyboard, and the three short flat cables to the other assemblies. The following conditions should then be observed:

U19 pin 1 should be high
U22 pin 1 should be high
U35 pin 1 should be high
U43 pin 1 – signature should be 5320

After completion of the test, be sure to replace the cables carefully, making sure that the contacts are aligned properly.

Fig 8-33a
Sht 1 of 4

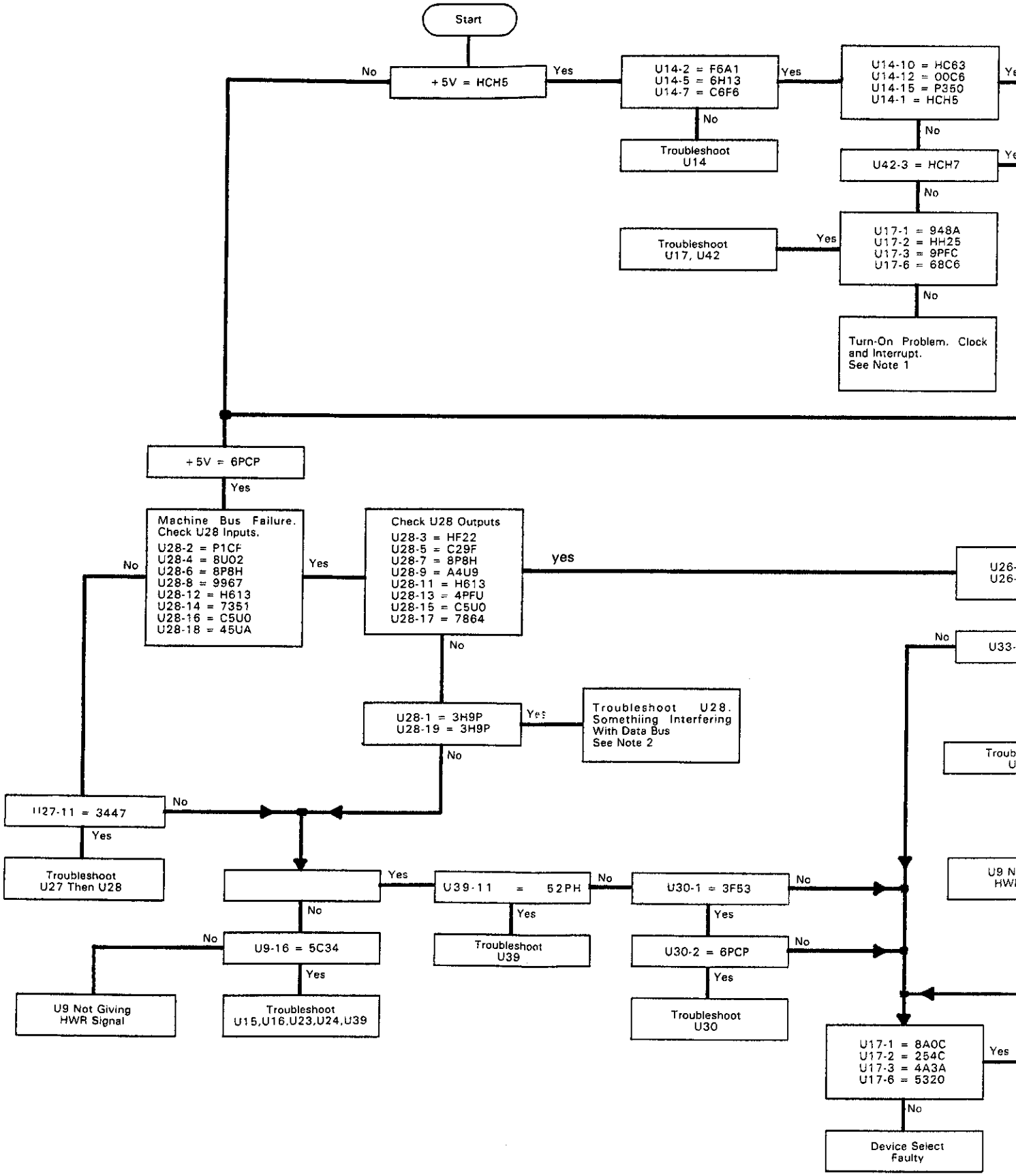

Fig 8-33a
Sht 2 of 4

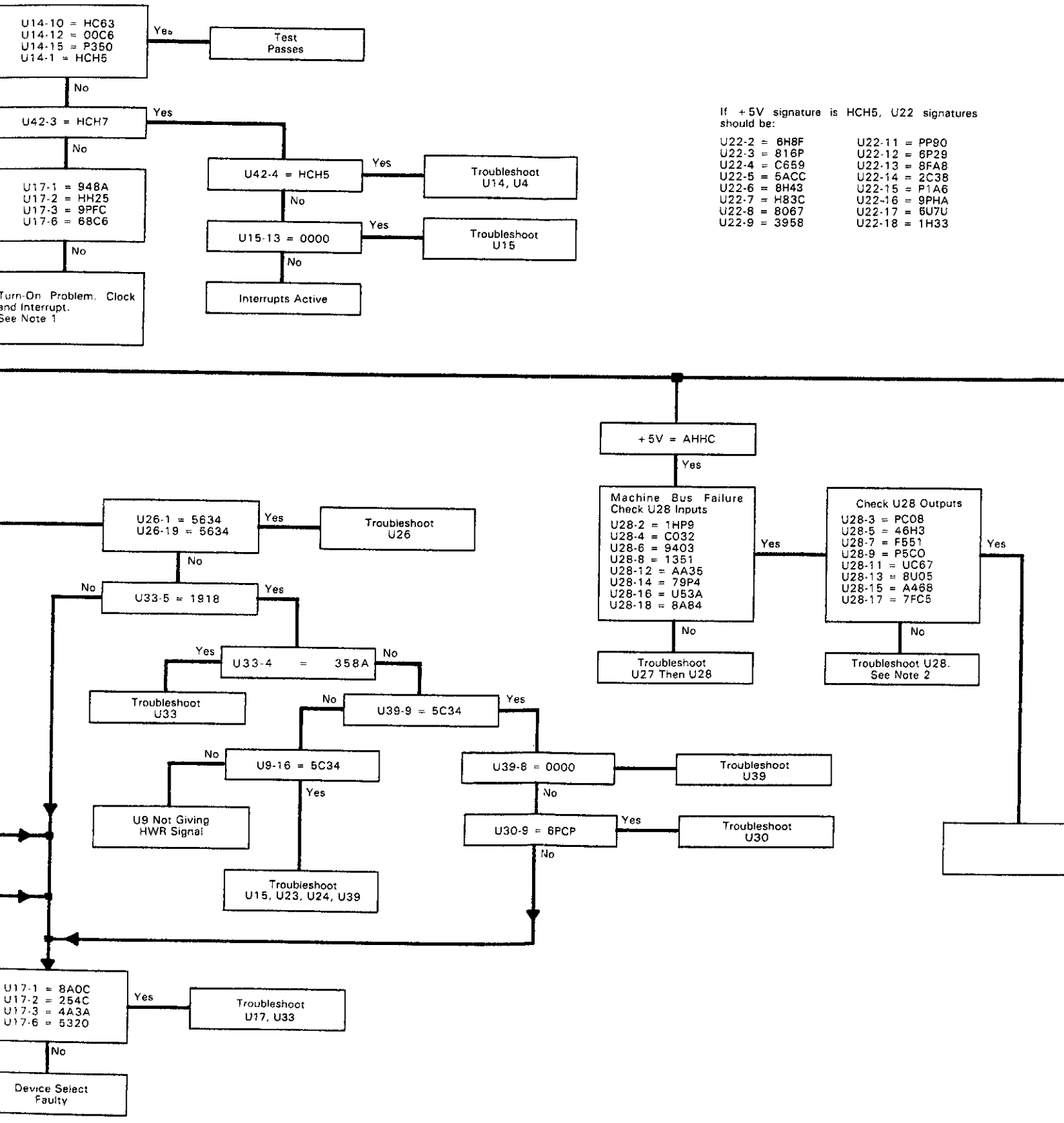

Fig 8-32a
Sht 3 of 4

is HCH5, U22 signatures

U22-11 = PP90
U22-12 = 6P29
U22-13 = 8FA8
U22-14 = 2C38
U22-15 = P1A6
U22-16 = 9PHA
U22-17 = 5U7U
U22-18 = 1H33

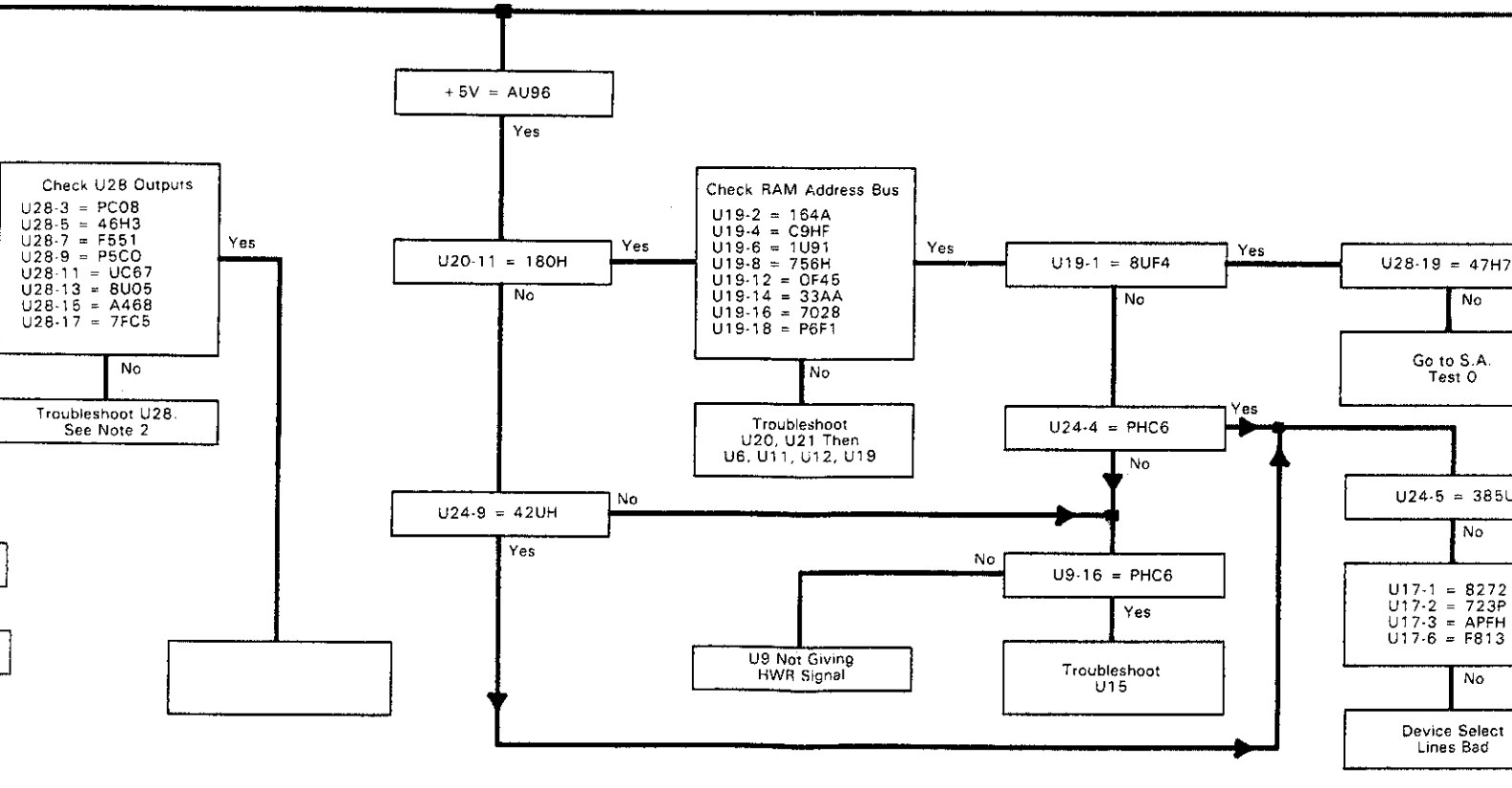

Figure 8-3

Fig 8-32a
Sht 4 of 4

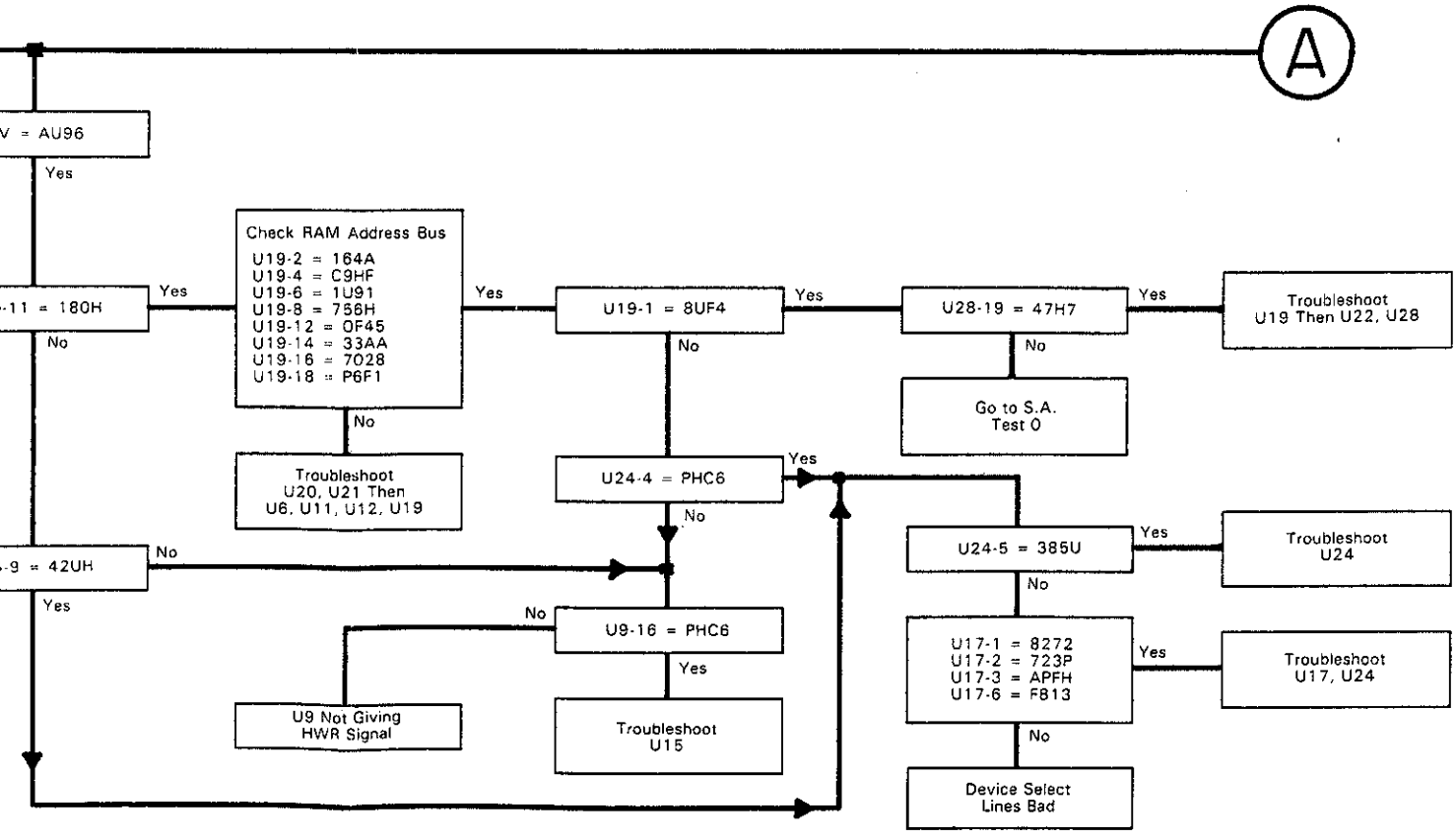

Figure 8-33(a). Signature Analysis Test 1.

Fig 8-33b
Sht 1 of 3

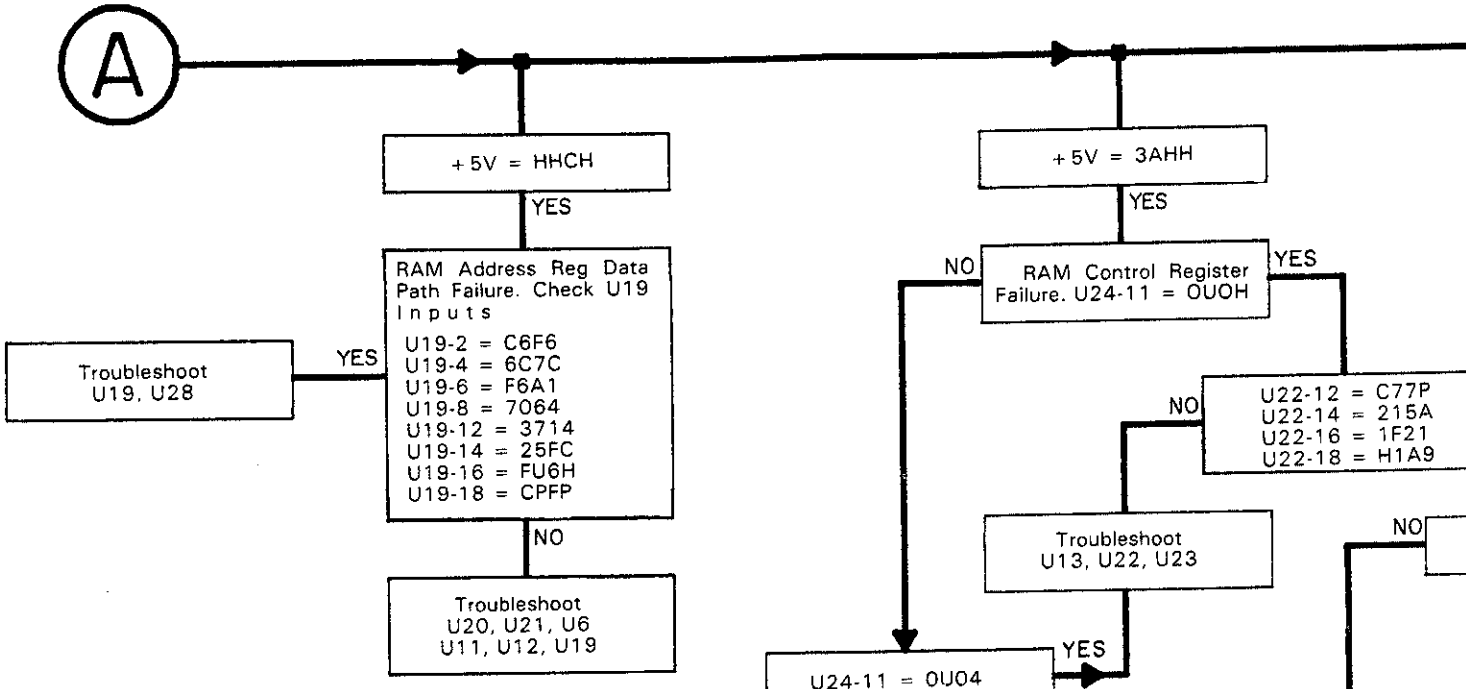

If +5V Signature is 3AHH check the following signatures:

U13-4 = A5PC
U13-5 = OH8A
U13-12 = 57PF
U13-13 = 1307

U22-3 = 28FO
U22-5 = 8756
U22-7 = 831F
U22-9 = 1P34
U22-11 = A4C4
U22-13 = 93CC
U22-17 = 396F

Fig 8-33b
Sht 2 of 3

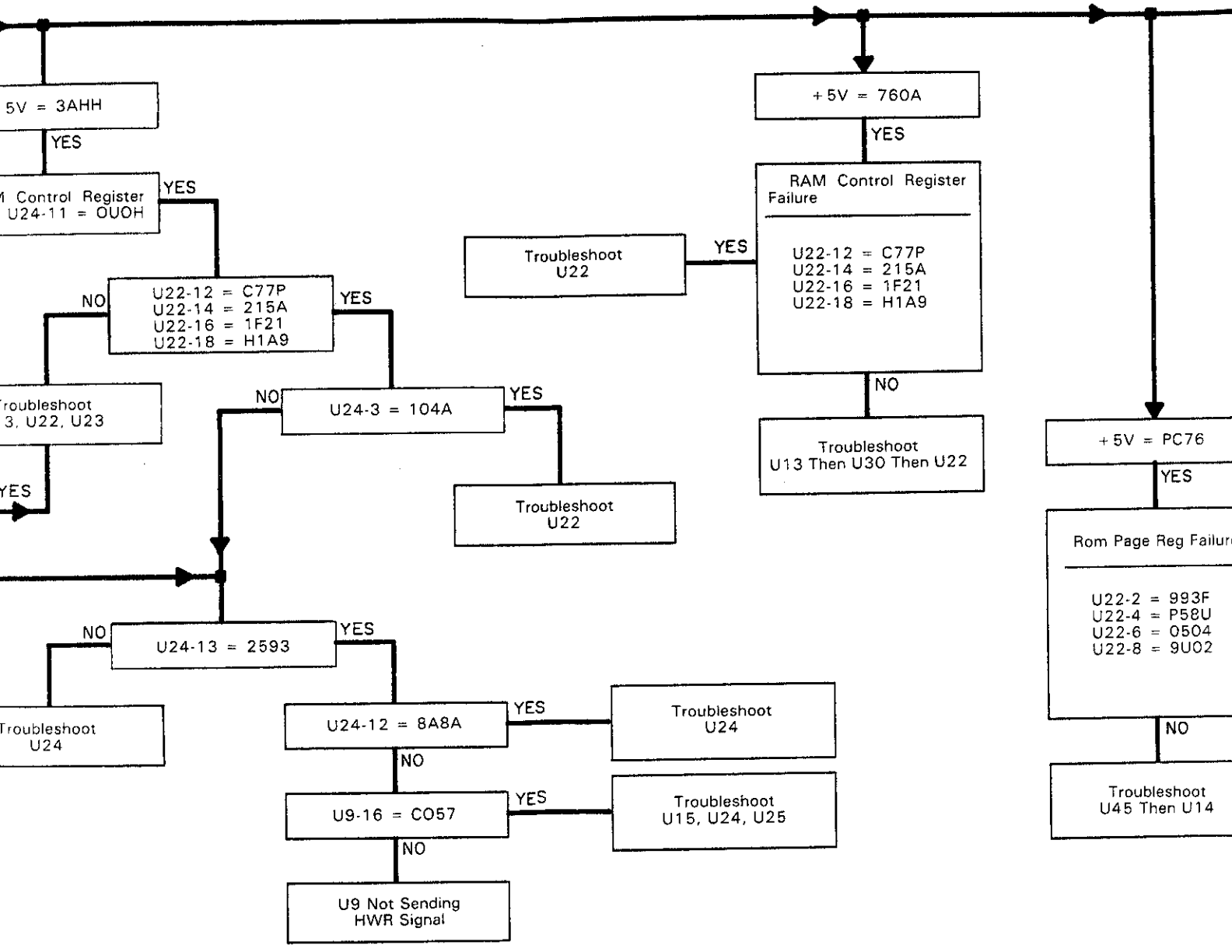

Fig 8 33b
Sht 3 of 3

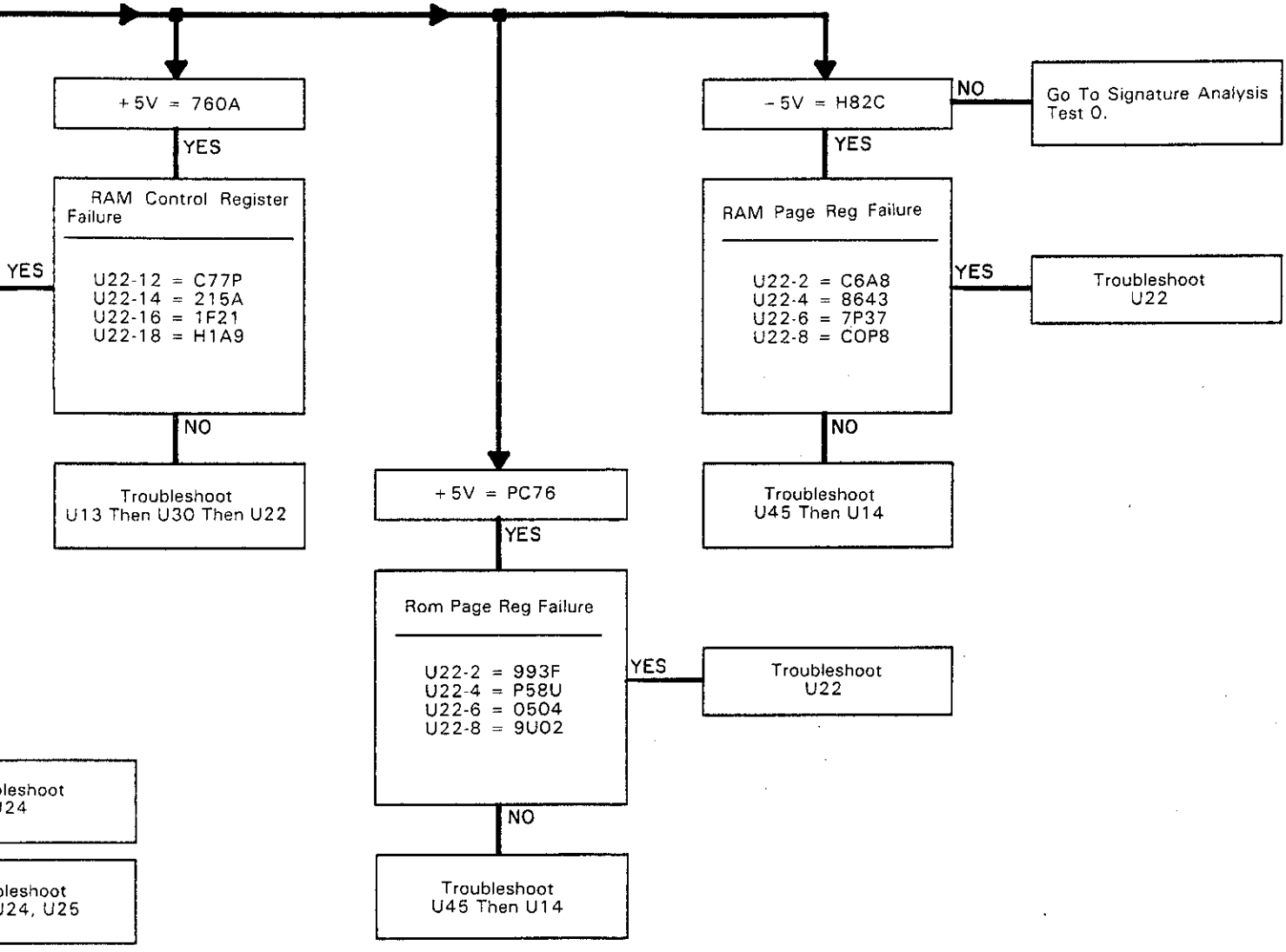

Figure 8-33(b). Signature Analysis Test 1.
8-C-21/8-C-22

SIGNATURE ANALYSIS TEST 2.

This test checks the ability of the RAM address register to count up and down, and checks the RAM output data.

This test uses two methods of signature analysis. The main difference between these methods is:

> Method 1 tests a repetitive data stream for a fixed period of time and generates a single stable signature.
>
> Method 2 tests a logical 1 (+5 V) for several periods of time, which are determined by the 3325A processor in response to the errors it has sensed or the test routine that has been programmed. Each situation produces a unique stable signature.

Use the following procedure:

a. Set the 3325A POWER switch to STBY.

b. Disconnect the flat cable to the attenuator assembly to prevent damage to the relays.

c. Connect the signature analyzer as follows:

Clock	SA CLK (at left of A6U9)
Start and Stop	SA S/S (at right of A6U15)
Ground	3325A ground (stiffener channel on deck between A6 and A21, or any Ground test point)

d. Set the signature analyzer controls as follows:

Line	On
Start	⌐_ (in)
Stop	⌐_ (in)
Clock	_⌐ (out)
Hold	Off
Self Test	Off

e. Place CSØ through CS2 shorting connectors (near right front corner of A6) in the O position to select ROM 1.

f. Set the ROM Disable switch (A6S1) to ON (1). Set all other switches to OFF (0).

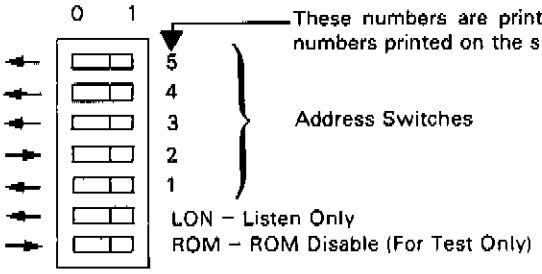

g. Connect A6TP3 (between U15 and U16) to ground.

h. Set 3325A POWER to ON.

i. Remove ground from A6TP3.

j. Place the signature analyzer probe on +5 V (logic 1). The large plated area near the center of A6 is +5 V.

If the signature is 5159, proceed to Step k.

If the signature is not 5159, troubleshoot A6U9 (processor), A6U10 (buffer), the processor data lines HPDØ–7, and associated circuits. Refer to the ROM Signature Analysis Test.

k. Set bus address bit 2 switch to ON (1), and set switch 1 and switches 3 through 5 to OFF. (See switch drawing above.)

l. The signature should be 7C97 as indicated at the START of the flow diagram. If it is not 7C97, go to the section of the diagram headed by the signature actually observed. If no stable signature or none of the signatures shown are observed, go to the ROM Signature Analysis Test. If Test 2 passes successfully, go to Signature Analysis Test 3. The tests associated with each signature heading are described as follows:

7C97 – This signature implies that the three RAM's may be addressed and read from correctly. It also indicates that U20 and U21 count up and down correctly.

FF7C – This signature indicates that U20 and U21 do not count up correctly. The test also checks enable signals.

279A – This signature indicates that U20 and U21 do not count down correctly.

709A – This signature indicates that RAM A or its enable signals are not correct.

F26C – This signature indicates that RAM B or its enable signals are not correct.

57C9 – This signature indicates that RAM C or its enable signals are not correct.

NOTE

After completion of tests, be sure to replace all cables, switches, connectors, and jumpers to the normal position.

Fig 8-34a
Sht 1 of 4

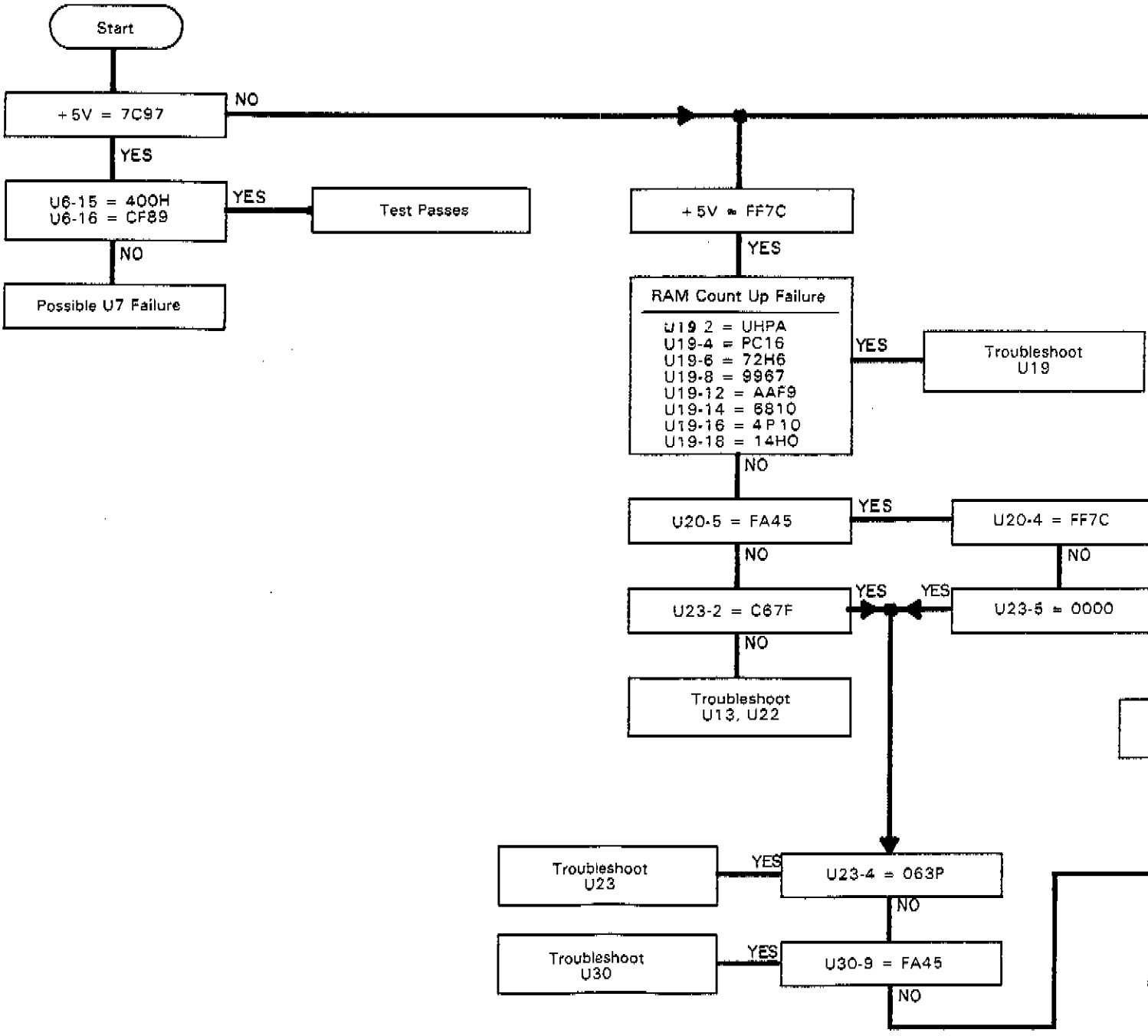

Fig 8-34a
Sht 2 of 4

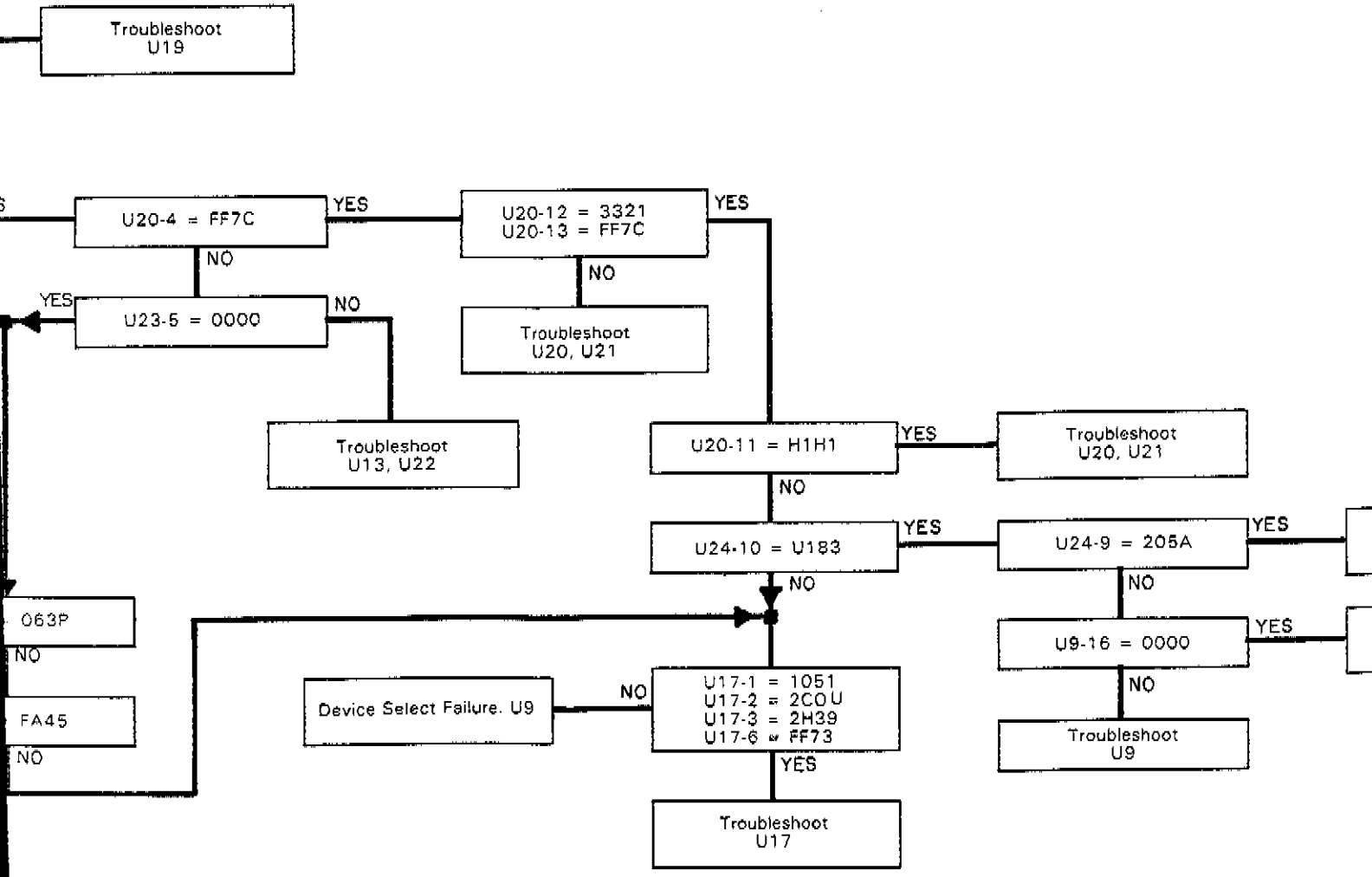

Fig 8-34a
Sht 3 of 4

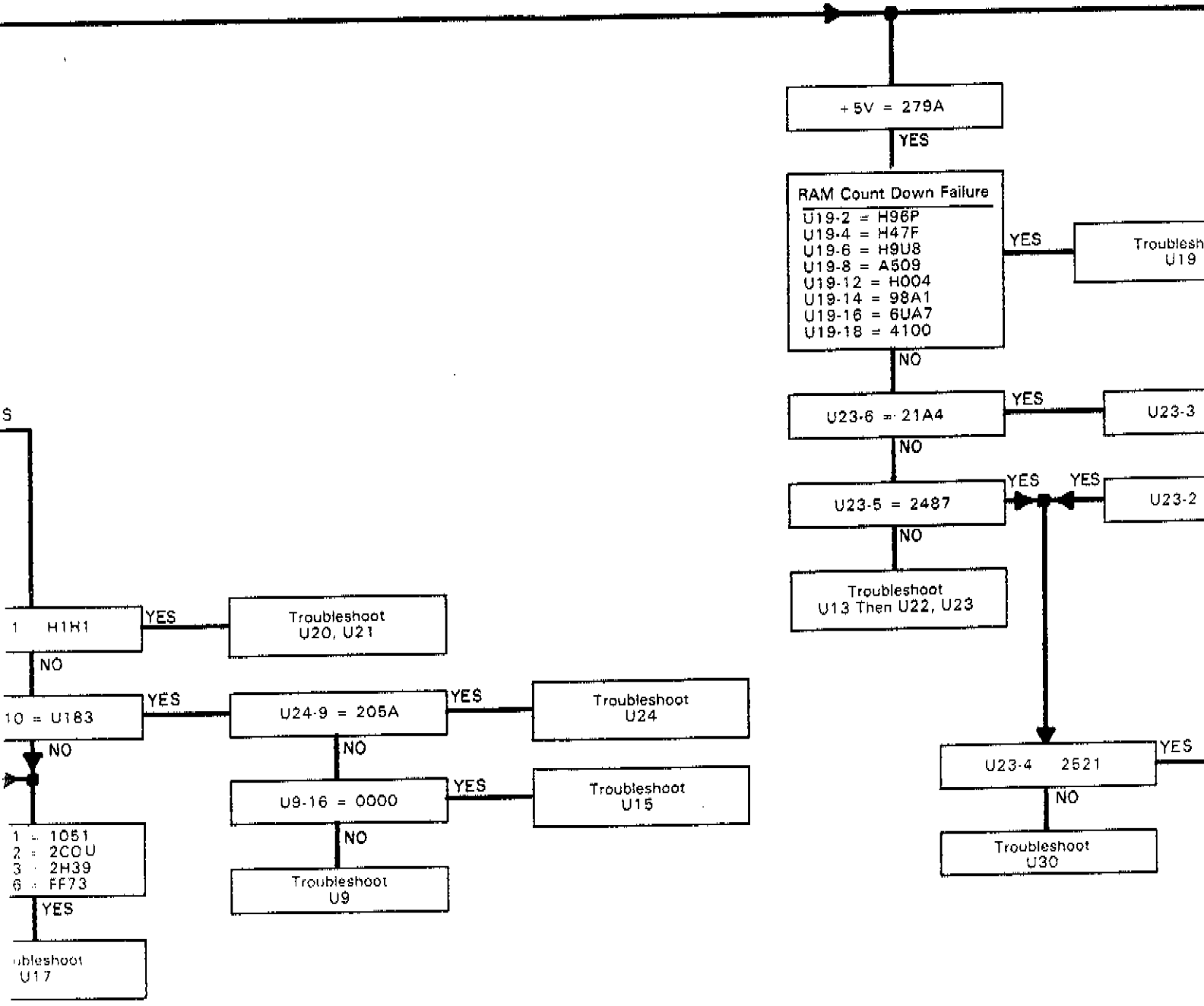

Fig 8-34a
Sht 4 of 4

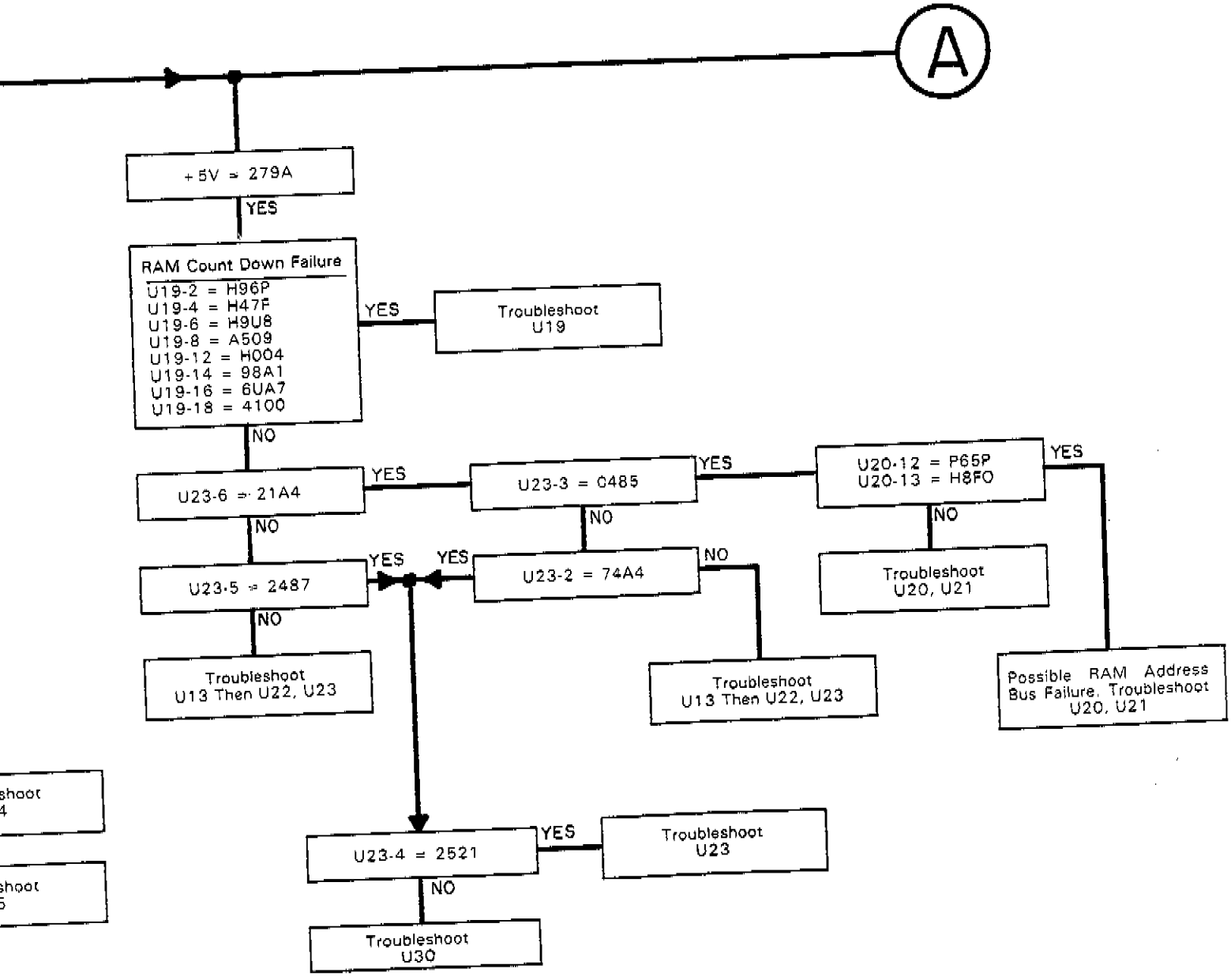

Figure 8-34(a). Signature Analysis Test 2.

Fig 8-34b
Sht 1 of 4

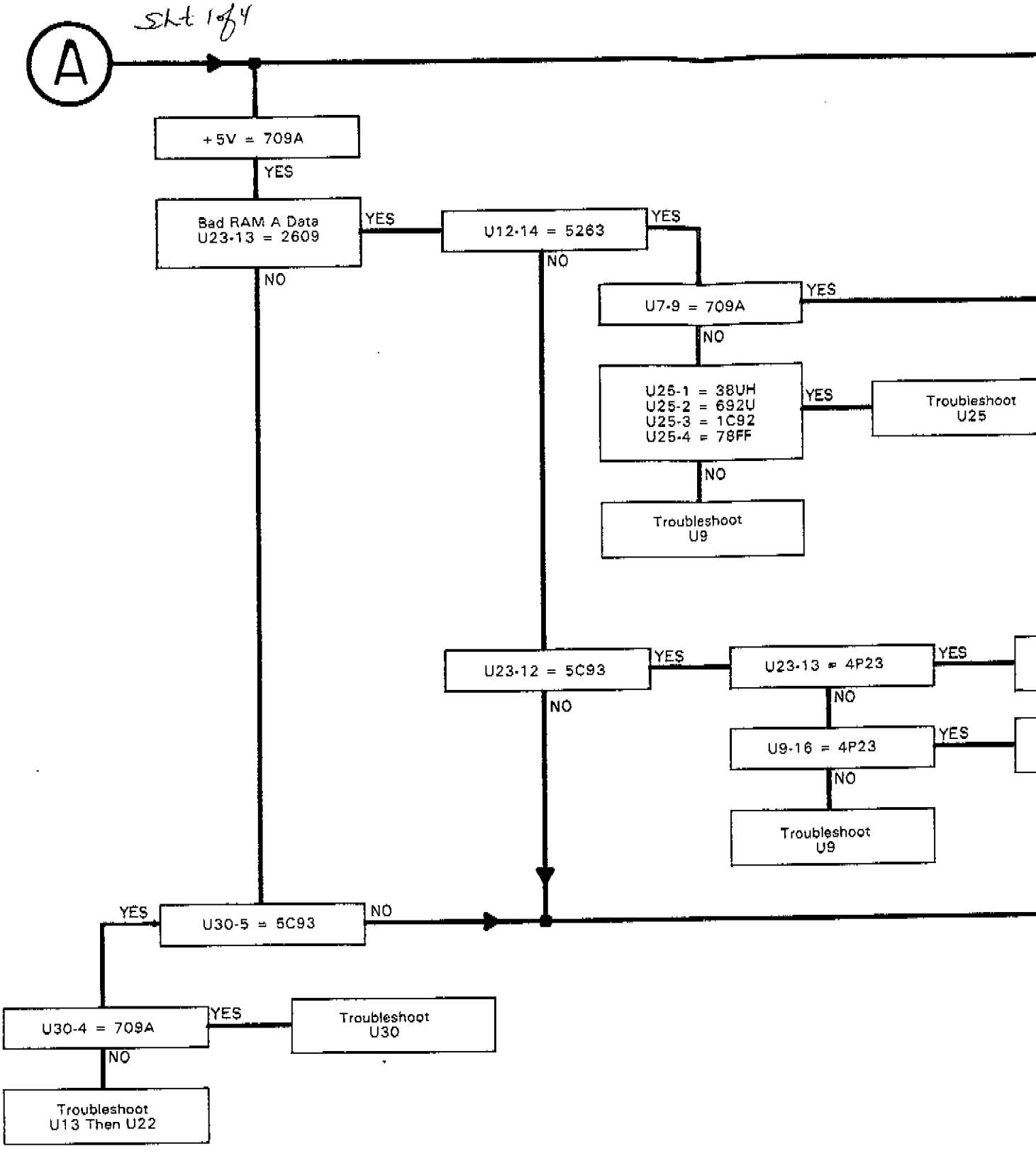

Fig 8-34b
Sht 2 of 4

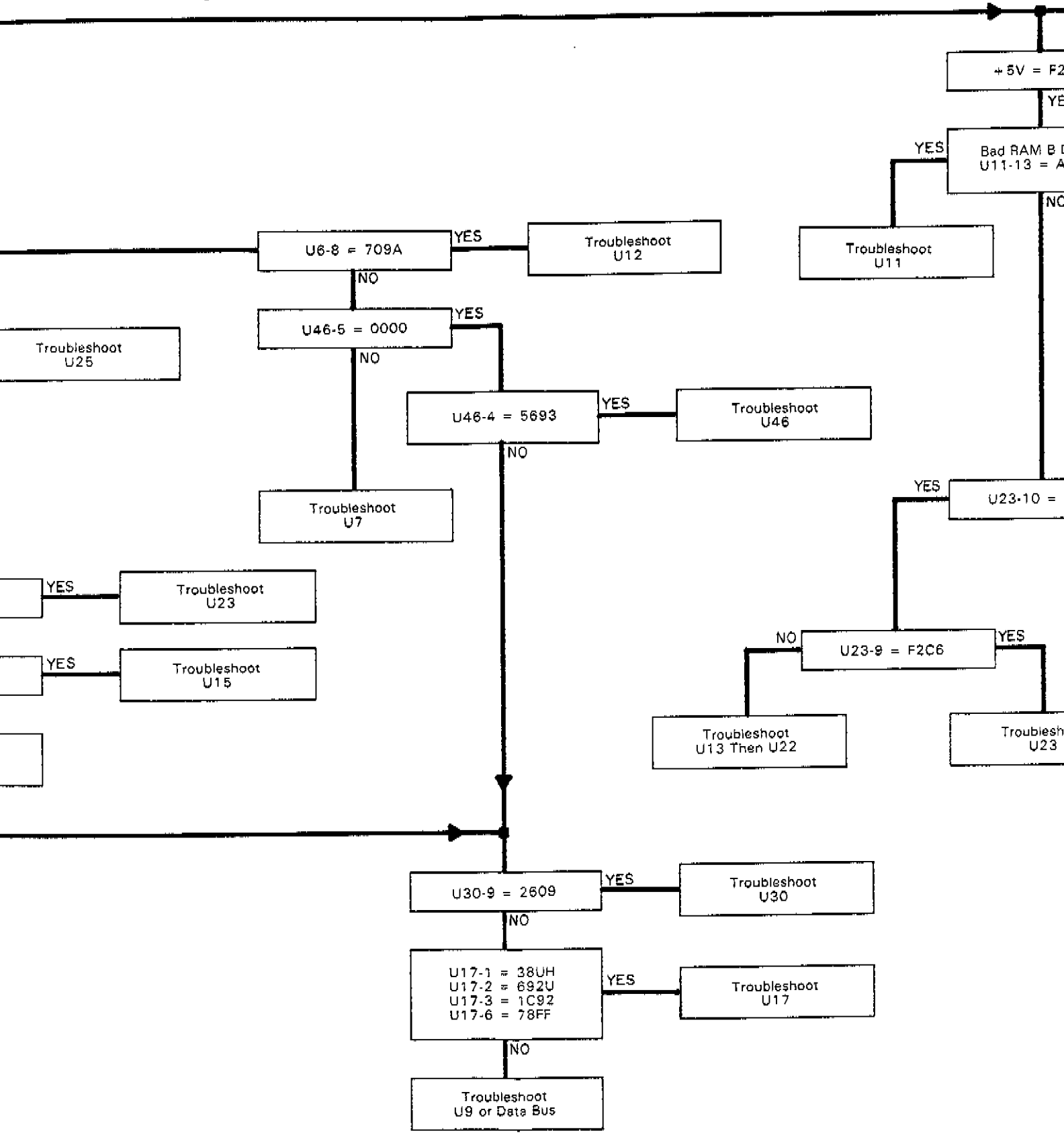

Fig 8-24b
Sht 3 of 4

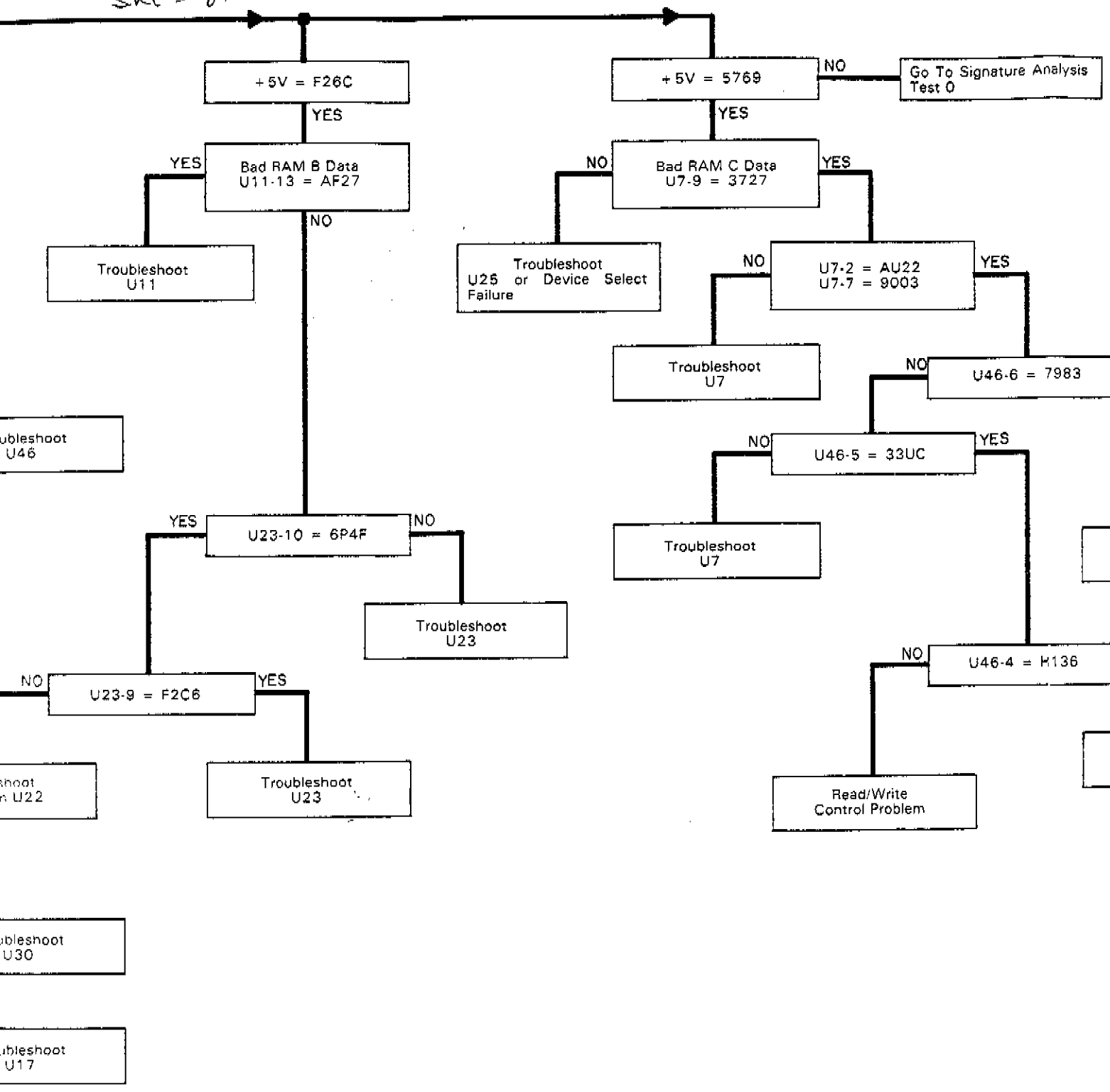

Fig 8-34b
Sht 4 of 4

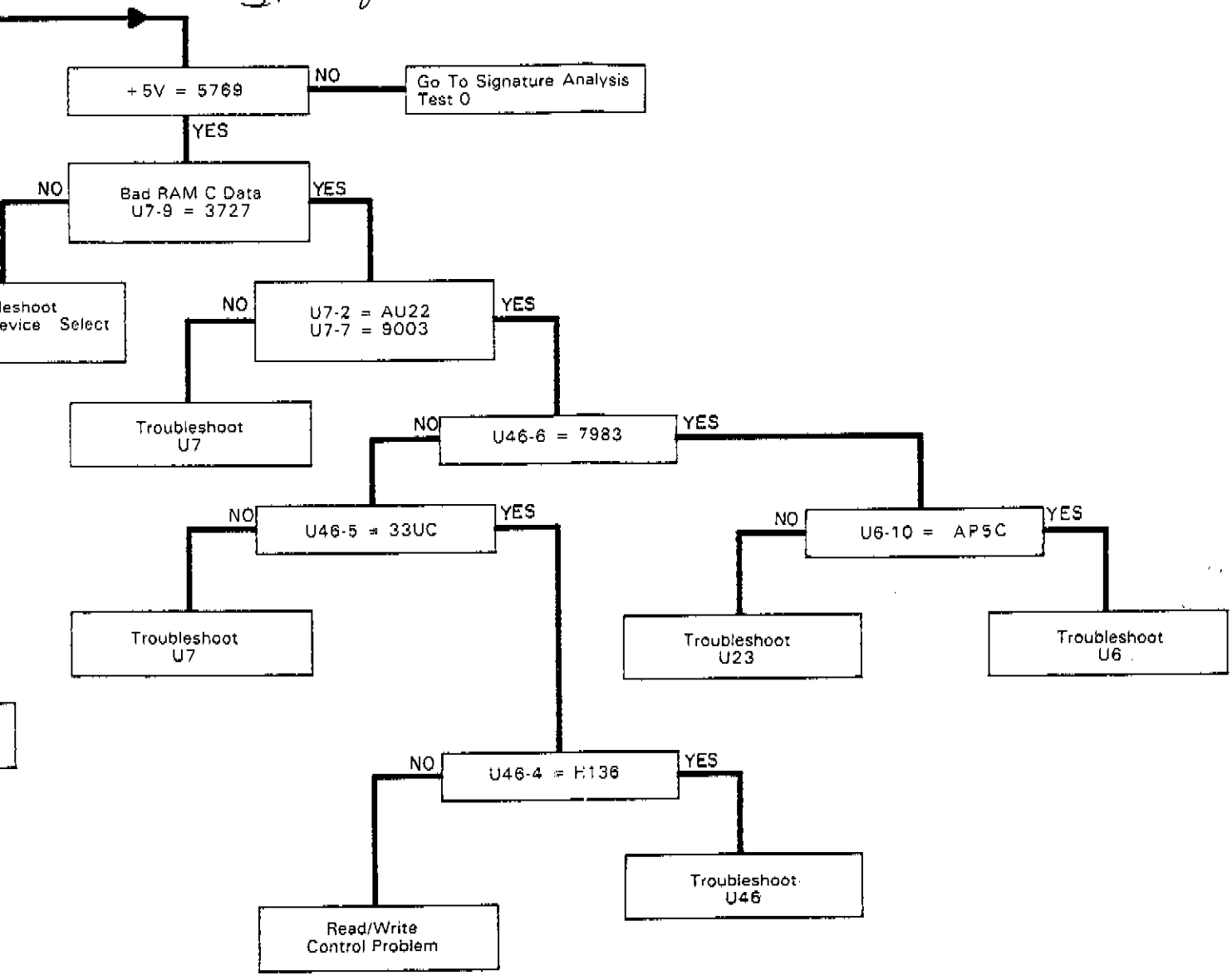

Figure 8-34(b). Signature Analysis Test 2.

SIGNATURE ANALYSIS TEST 5.

This test checks the data path from the processor (A6U9) to the Fractional N Control IC (A21U19). It disables the processor interrupt and checks for signals on the various interrupt lines. This test also checks the 1ms timing one-shot (A6U8), the Carry/Sweep limit flag path, the VCO status lines, and the turn-on circuits.

This test uses two methods of signature analysis. The main difference between these methods is:

Method 1 tests a repetitive data stream for a fixed period of time and generates a single stable signature.

Method 2 tests a logical 1 (+5 V) for several periods of time, which are determined by the 3325A processor in response to the errors it has sensed or the test routine that has been programmed. Each situation produces a unique stable signature.

Use the following procedure for Signature Analysis Test 4:

a. Set the 3325A POWER switch to STBY.

b. Disconnect the flat cable to the attenuator assembly to prevent damage to the relays.

c. Connect the signature analyzer as follows:

Clock	SA CLK (at left of A6U9)
Start and Stop	SA S/S (at right of A6U15)
Ground	3325A ground (stiffener channel on deck between A6 and A21, or any Ground test point)

d. Set the signature analyzer controls as follows:

Line	On
Start	¬_ (in)
Stop	¬_ (in)
Clock	_/¯ (out)
Hold	Off
Self Test	Off

e. Make sure the CSØ through CS2 shorting connectors (near right front corner of A6) are in the center position.

f. Connect A6TP3 and A6TP6 to ground.

g. Set all bus address switches (A6S1) to the OFF position. See switch drawing below.

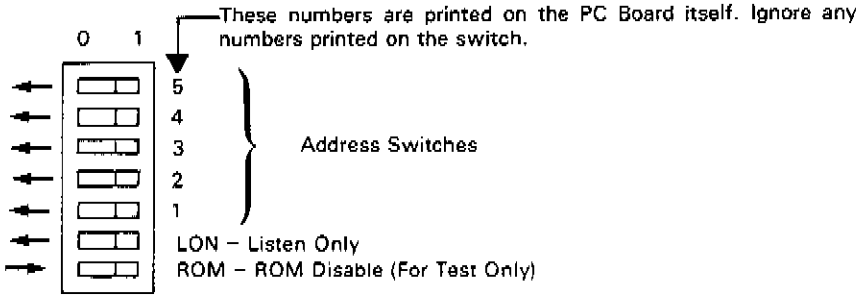

h. Set 3325A POWER switch to ON.

i. Disconnect ground from A6TP3 then A6TP6.

j. Set bus address switch 5 to ON.

k. Place the signature analyzer probe on +5 V (logic 1). The large plated area near the center of A6 is +5 V.

l. Follow the flow diagram from START. If no stable or valid signatures are obtained, the processor (A6U9) or the ROM's (A6U1–4) may be defective. Use the ROM Signature Analysis Test to check these components.

NOTE

After completion of the test, be sure to replace all cables, jumpers, and switches to the normal position.

The signature taken in Step k should be FC6A as indicated at the START of the flow diagram. If it is not, go to the section of the diagram headed by the signature actually observed. The tests associated with each signature heading are described as follows:

F C 6 A – Test passes.

CAUH – Erroneous Turn-on signal.

PCU5 – Erroneous bus interrupt.

AUH6 – Erroneous sweep limit flag.

CU5C – Timer error.

4525
5307 – Fractional N IC Data lost.
7112

1123 – Invalid Sweep Limit Flag

1232 – No Sweep Limit Flag.

Fig 8-35a
Sht 1 of 5

232C – Processor receiving a VCO High signal.

8FAF – Processor receiving a VCO Low signal.

AFC6 – Missed Sweep Limit Interrupt.

C2HA – Missed 1 ms Clock.

NOTE

Unless otherwise identified, all IC's in this test are on the A6 assembly.

Fig 8-35a
Sht 2 of 5

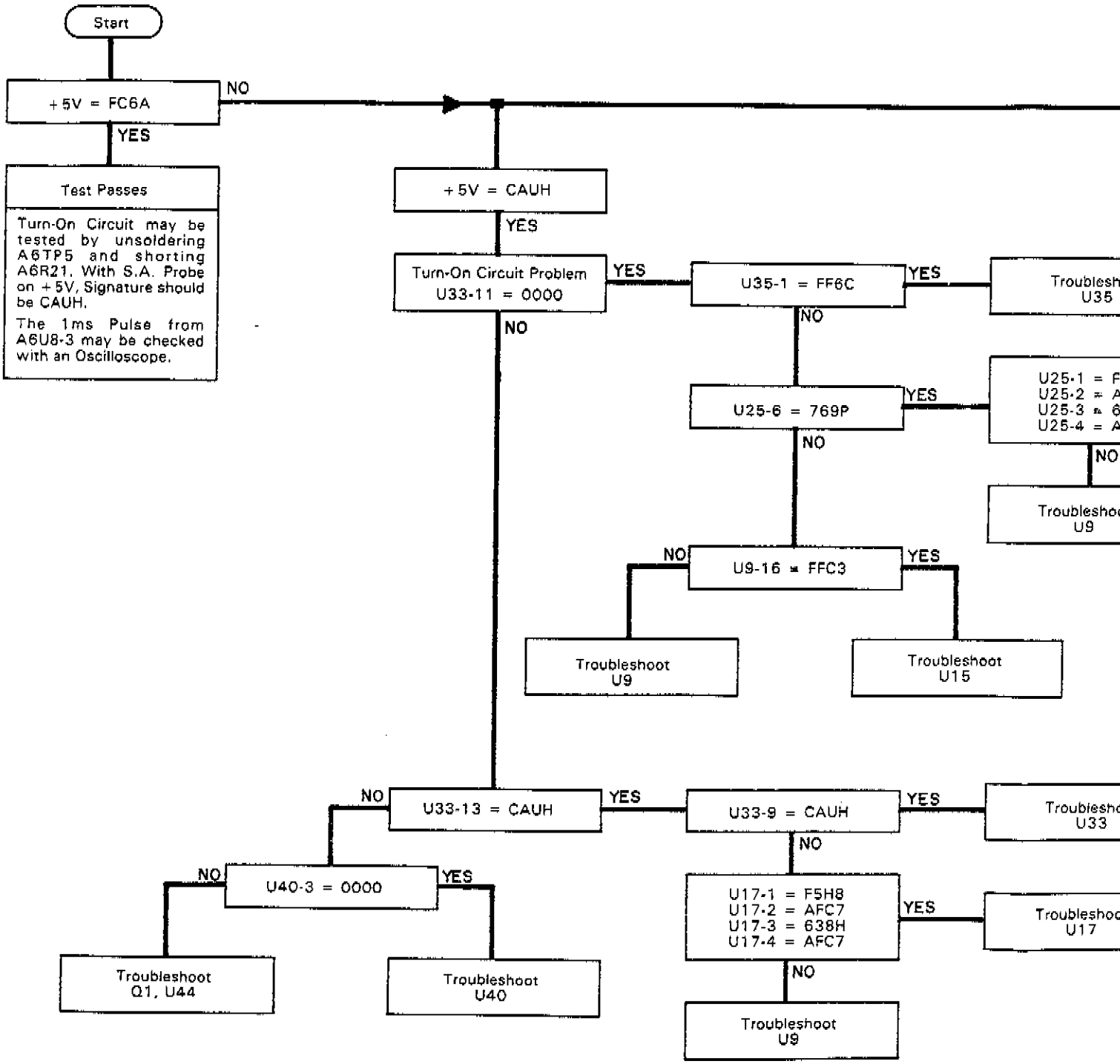

Fig 8-35a
Sht 3 of 5

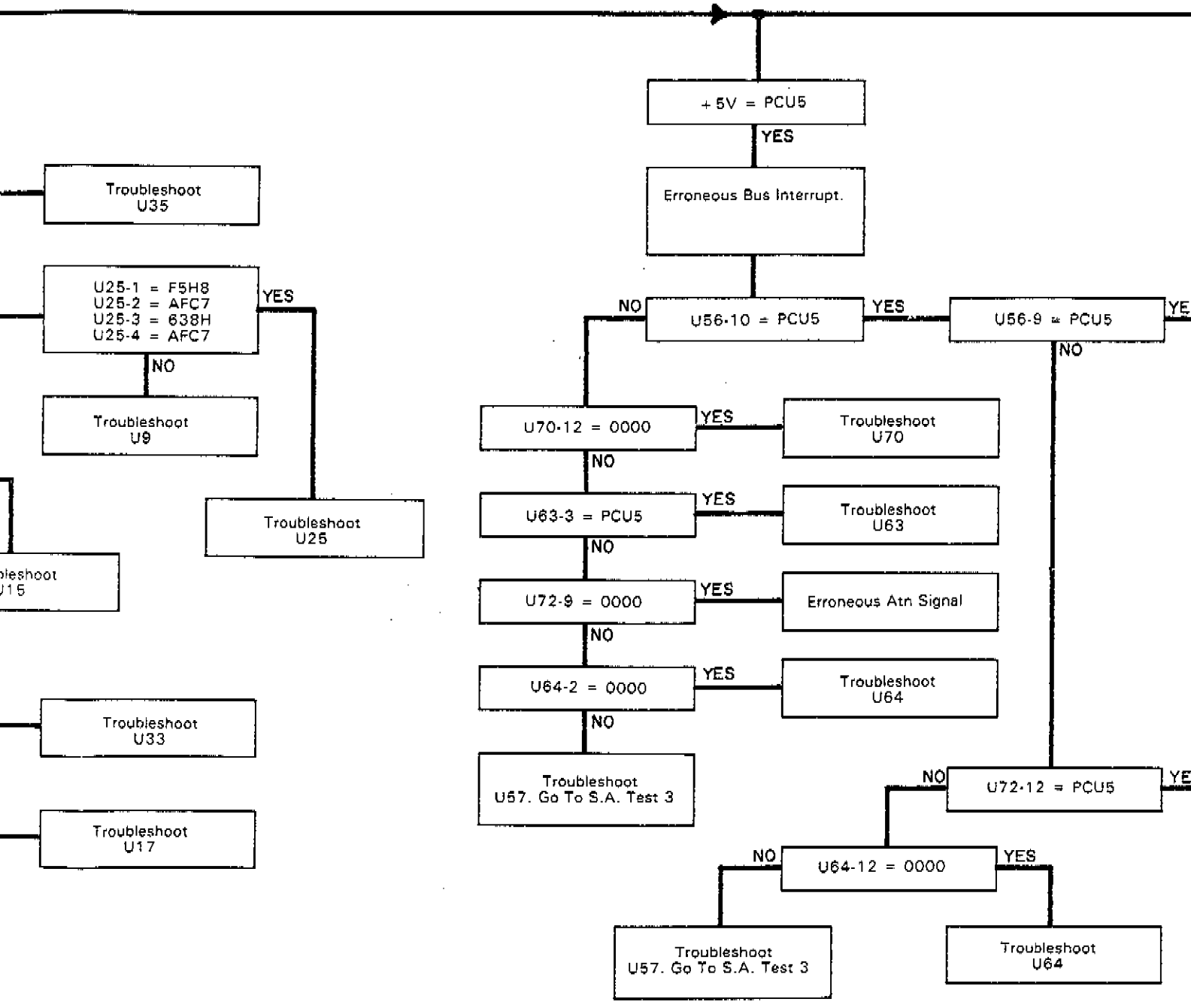

Fig 8-35a
Sh 4 of 5

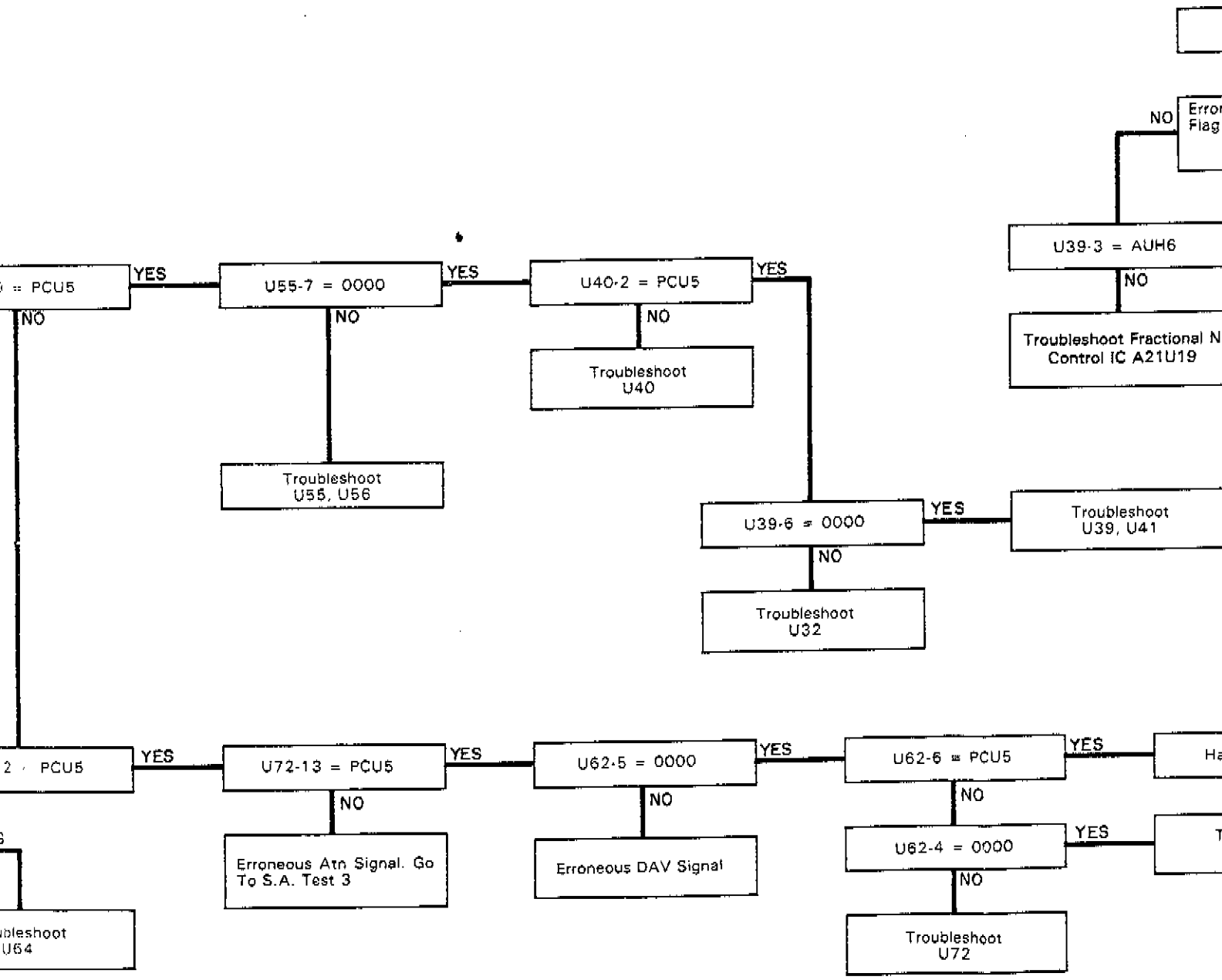

Fig 8-35a
Sht 5 of 5

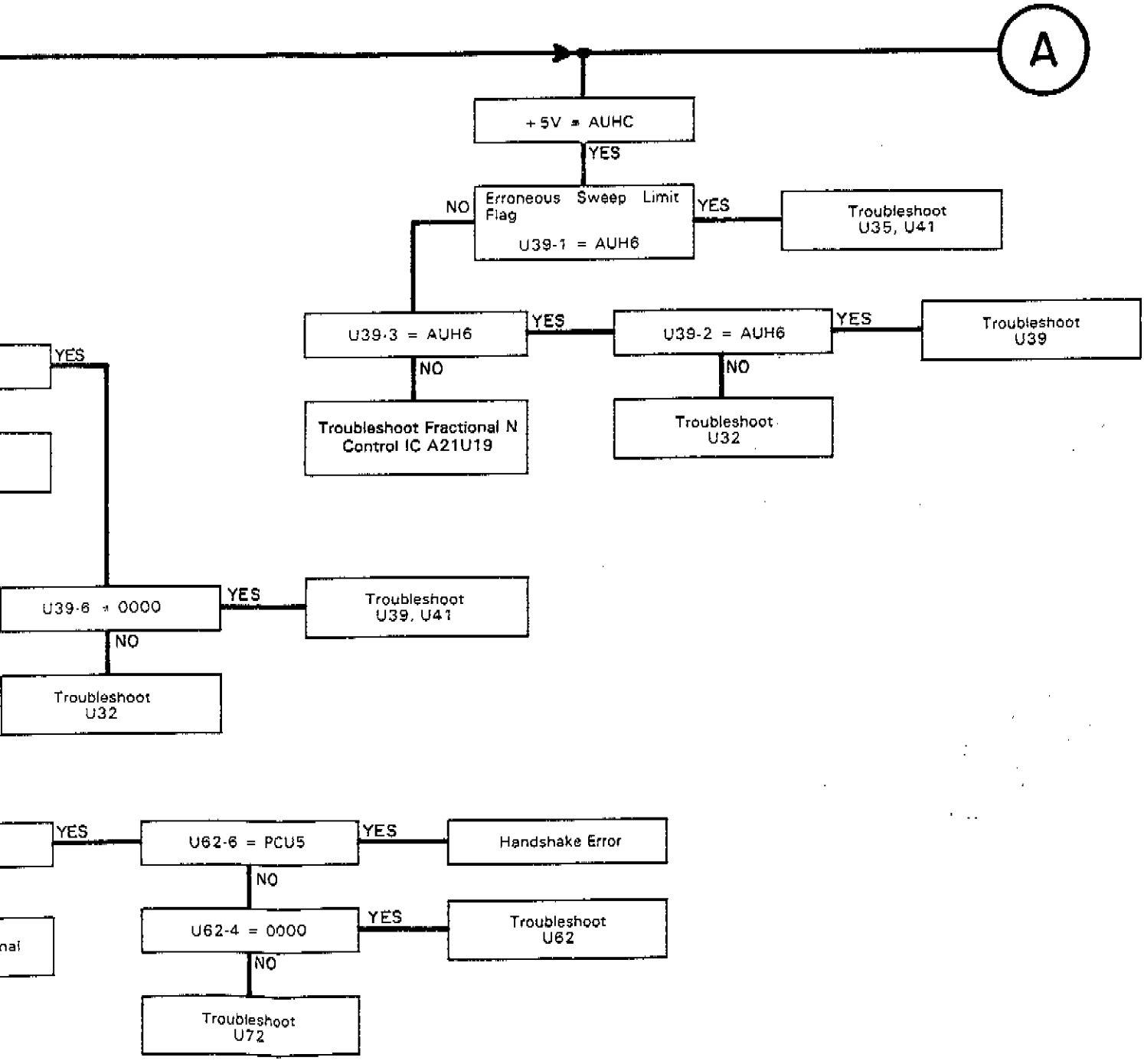

Figure 8-35(a). Signature Analysis Test 5.
8-C-31/8-C-32

Fig 8-35b
Sht 1 of 4

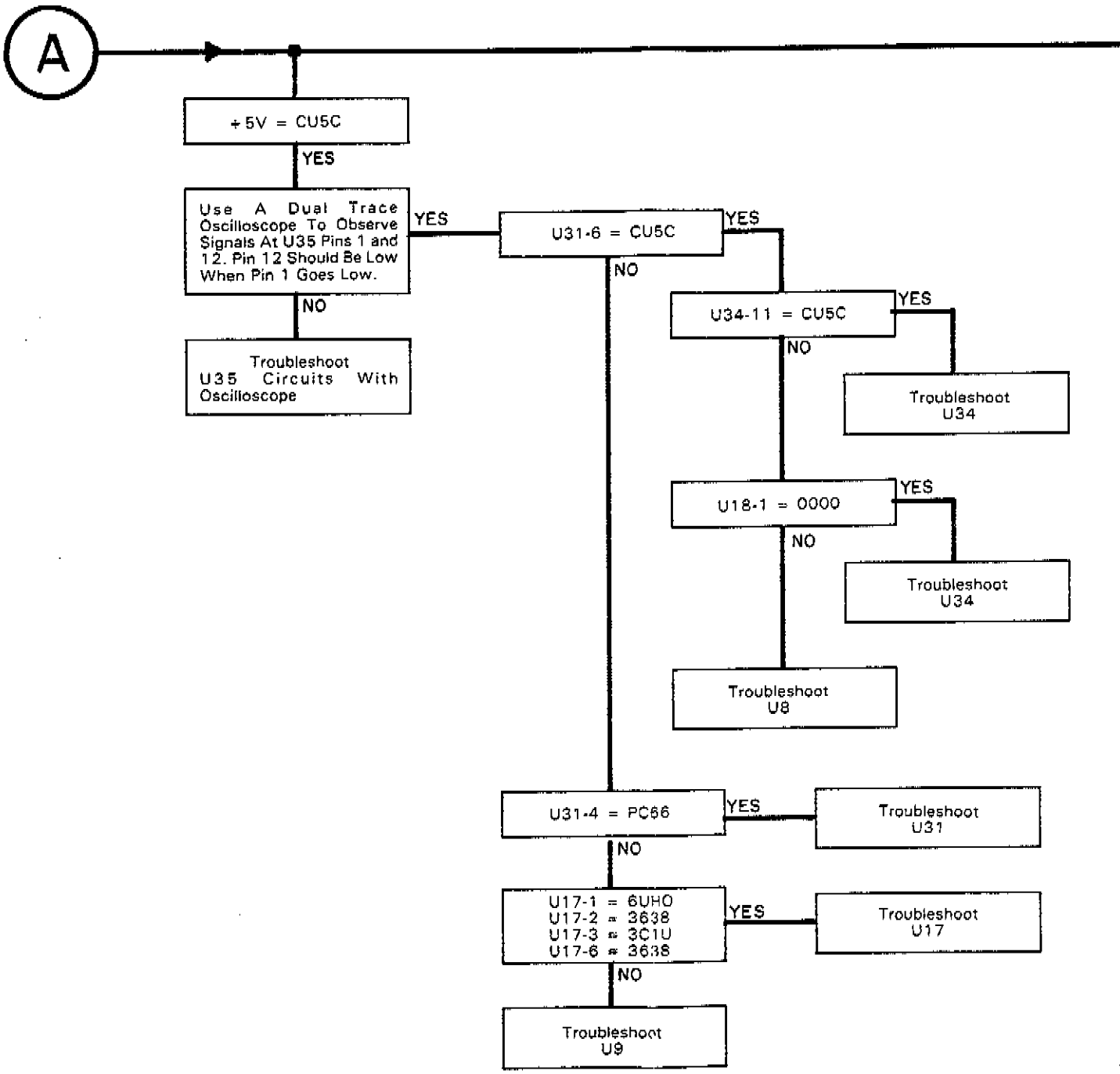

Fig 8-35b
sht 2 of 4

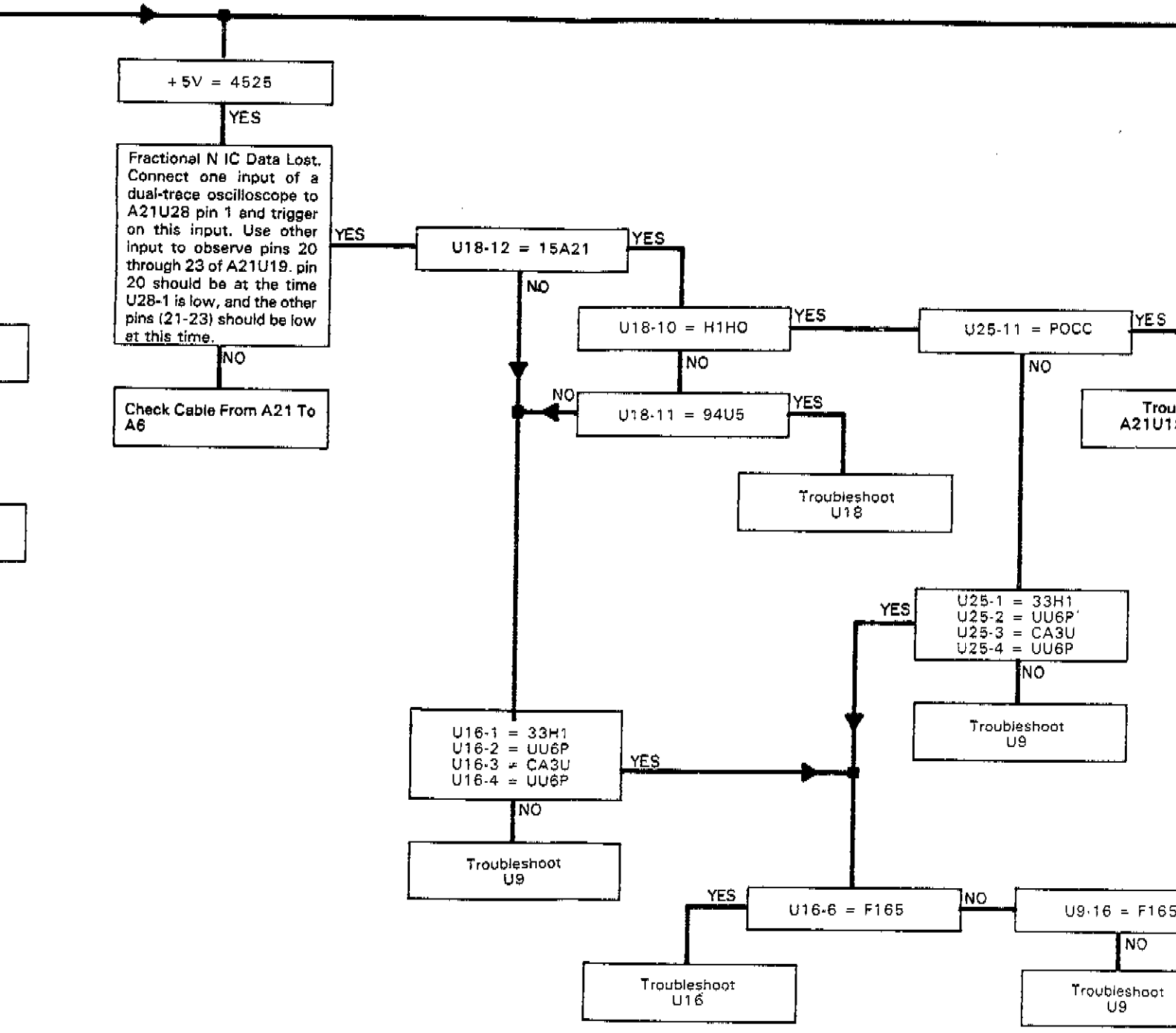

Fig 8-35
Sht 3 of 4

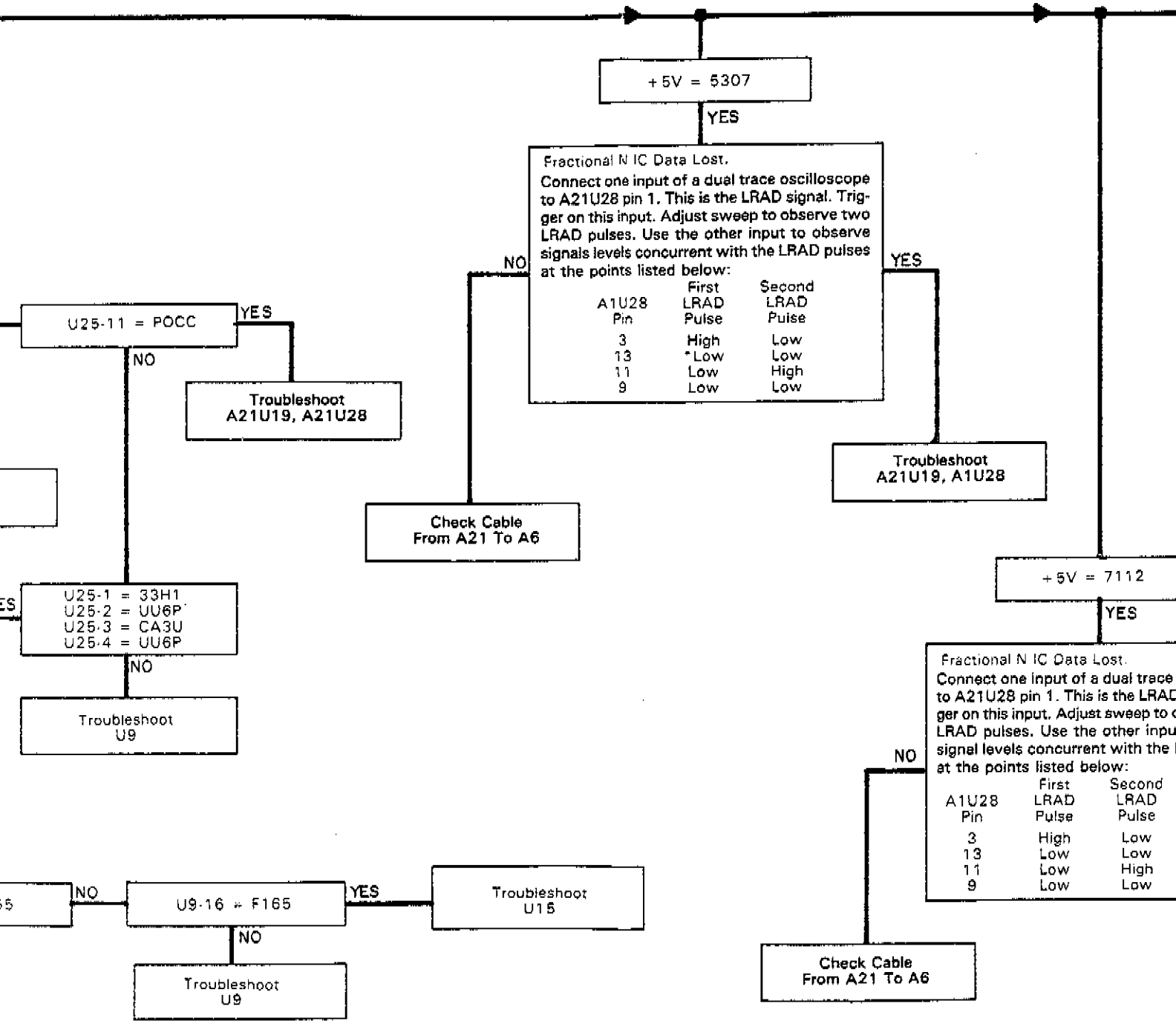

Figure 8-3

Fig 8-35b
Sht 4 of 4

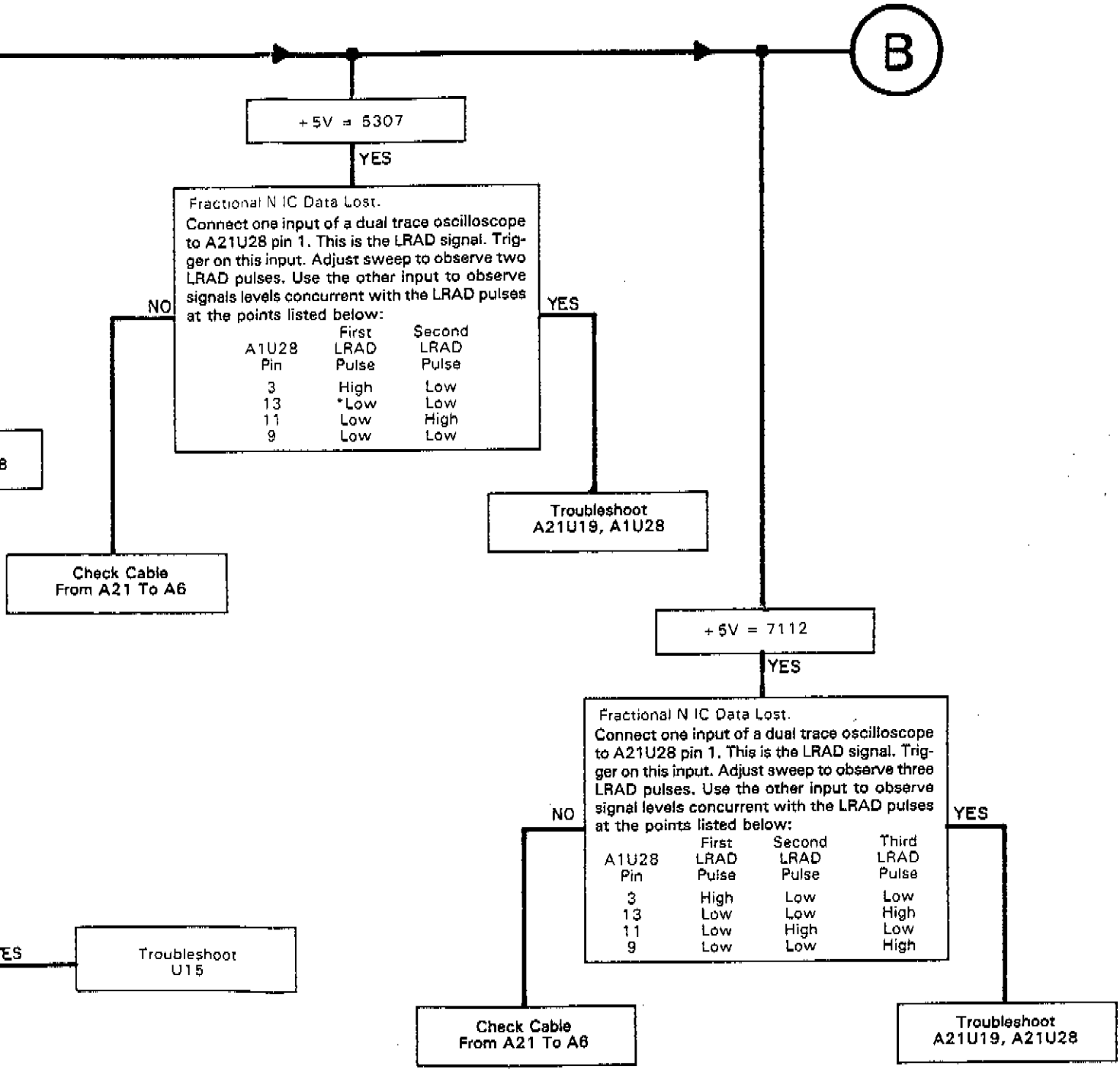

Figure 8-35(b). Signature Analysis Test 5.

Fig 8.35c
sht 1 of 2

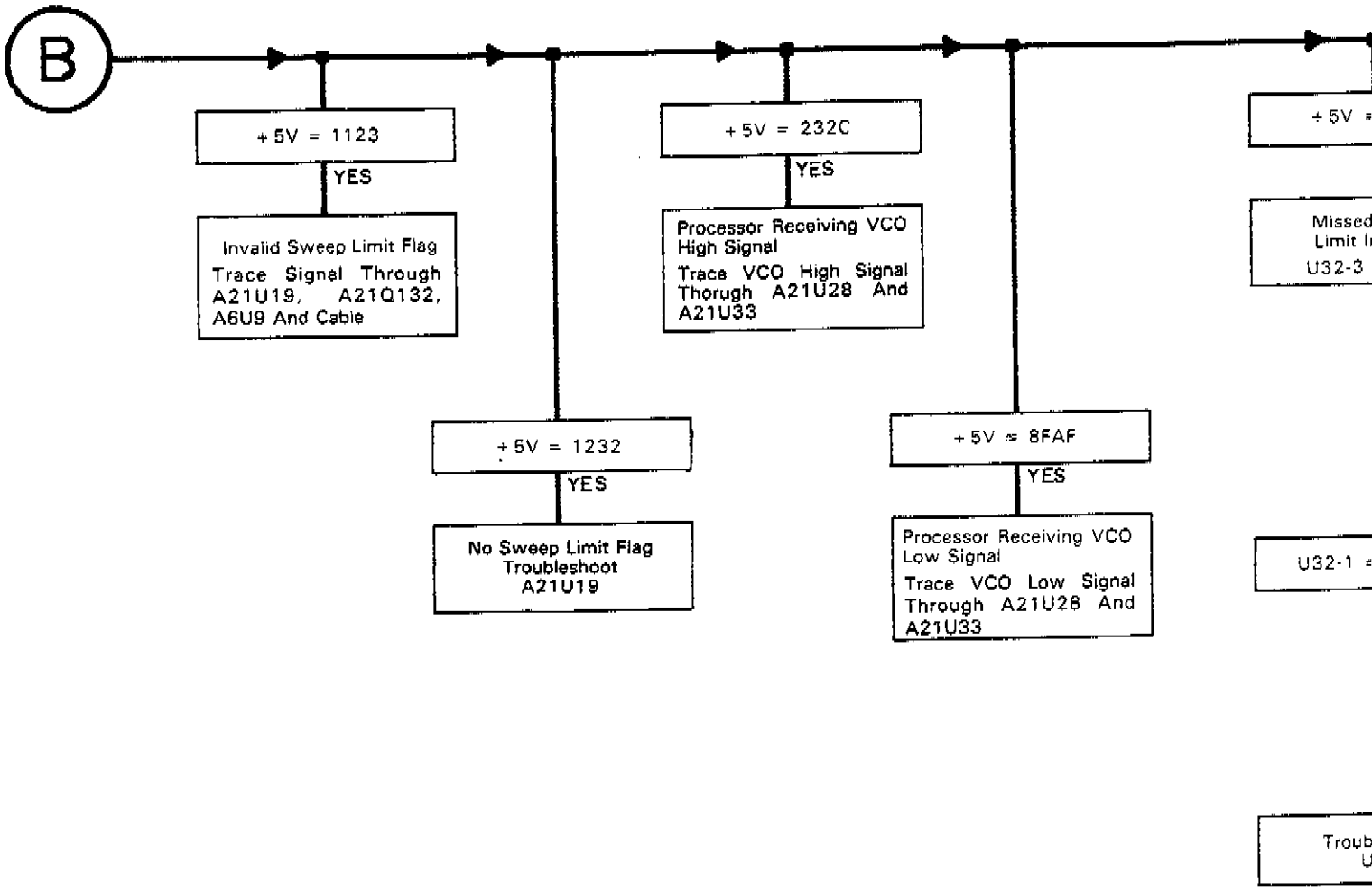

Fig 8-35c
Sht 2 of 2

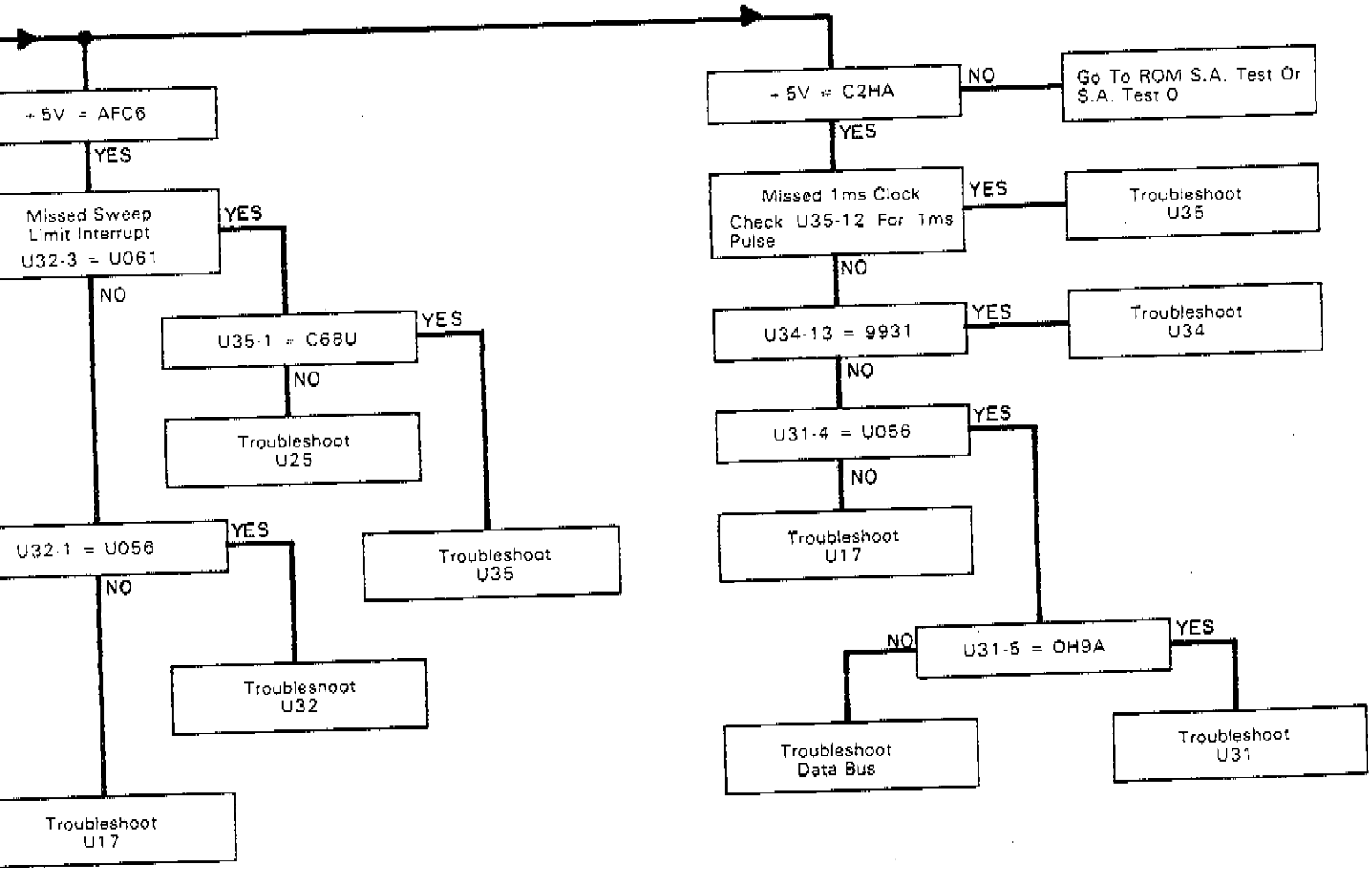

Figure 8-35(c). Signature Analysis Test 5.

Designator	Board Location
C1	G
C2	G
C3	G
C4	F
C5	G
C6	G
C7	G
C20	H
C21	H
C22	H
C23	H
C24	G
C25	G
C26	F
C27	F
C28	E
C29	E
C30	E
C31	E
C32	D
C33	D
C34	D
C35	C
C36	H
C37	H
C38	C
C39	B
C40	B
C41	G
C52	C
C53	A
C54	A
C55	A
C56	A
C57	A
C58	C
C59	C
C60	C
C61	B
C62	B
CR1	F
CR2	H
CR4	C
CR5	C
J1	F
J2	D
J3	D
J4	D
J51	A
L1	G
L2	F
L3	F

Designator	Board Location
P52	A
Q1	D
Q2	D
R1	G
R2	G
R3	G
R4	G
R5	F
R6	G
R7	F
R8	F
R9	C
R10	D
R13	G
R14	D
R15	C
R16	C
R17	C
R18	B
R19	E
R20	D
R21	C
R22	C
R23	C
R24	C
R25	C
R26	F
R51	B
R52	C
R53	A
R54	C
R55	C
S1	B
Test Points	
1	G
2	C
3	F
4	C
5	D
7	C
51	A
52	A
53	A
54	A
GND	D
GND	H
SA CLK	G
SA S/S	F
STBY	A

Designator	Board Location
T/N	G
CS0	G
CS1	G
CS2	G
U1	H
U2	H
U3	H
U4	H
U5	H
U6	H
U7	H
U8	G
U9	G
U10	G
U11	G
U12	G
U13	G
U14	G
U15	F
U16	F
U17	F
U18	F
U19	F
U20	F
U21	F
U22	F
U23	F
U24	F
U25	E
U26	E
U27	E
U28	E
U29	E
U30	E
U31	E
U32	D
U33	D
U34	D
U35	D
U36	D
U37	D
U38	D
U39	D
U40	D
U41	D
U42	D

Designator	Location
U43	C
U44	C
U45	H
U46	H
U51	C
U52	C
U53	C
U54	C
U55	C
U56	C
U57	B
U58	B
U59	B
U60	B
U61	B
U62	B
U63	B
U64	B
U65	B
U66	A
U67	A
U68	A
U69	A
U70	A
U71	A
U72	A
U73	A
U74	A
U75	C
V1	A
W1	B

Fig 8-36
Sht 1 of 5

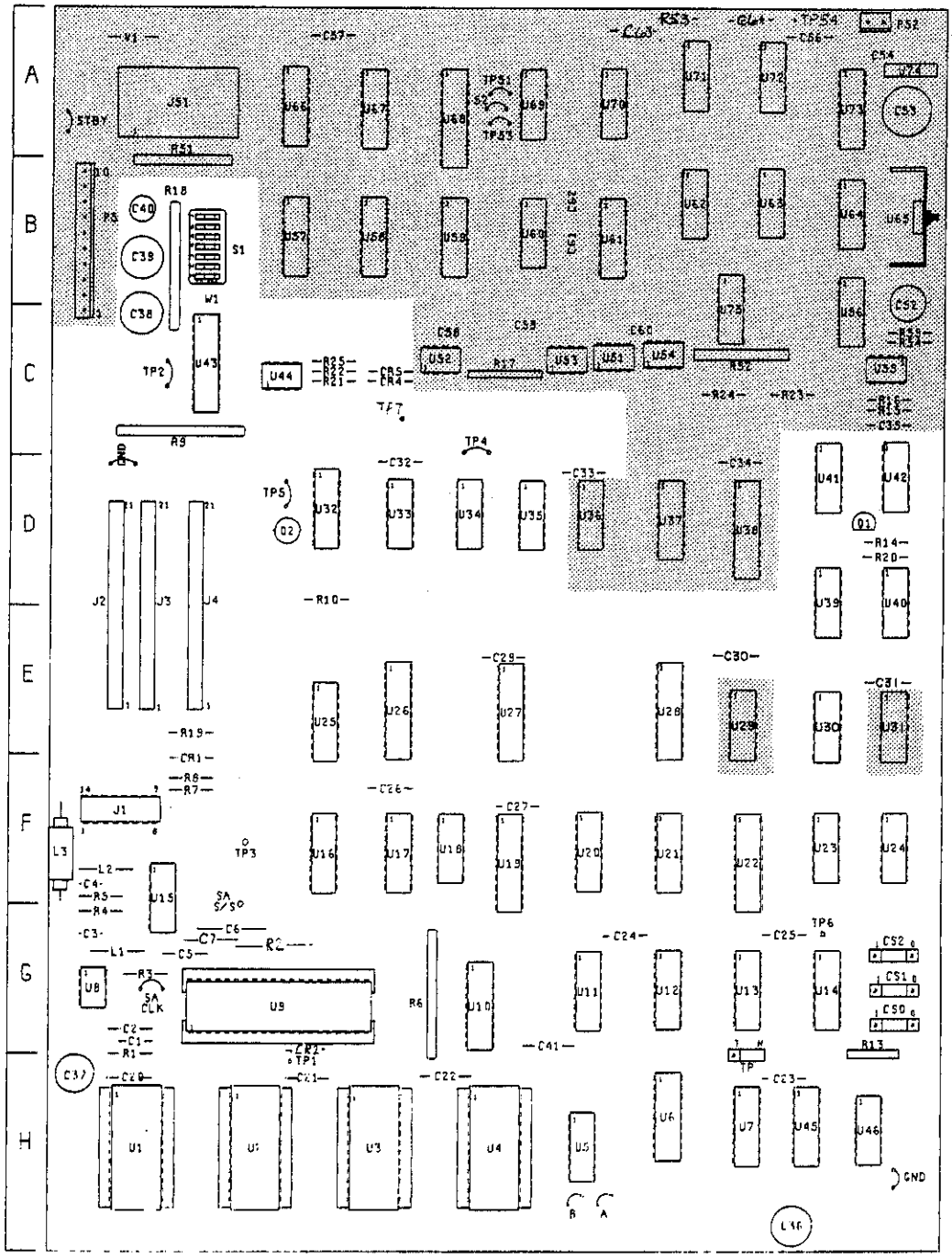

A6
03325-66506
Rev C

Note 1: Refer to paragraph 8-113 if board replacement is necessary.

Fig 8-36
Sht 2 of 5

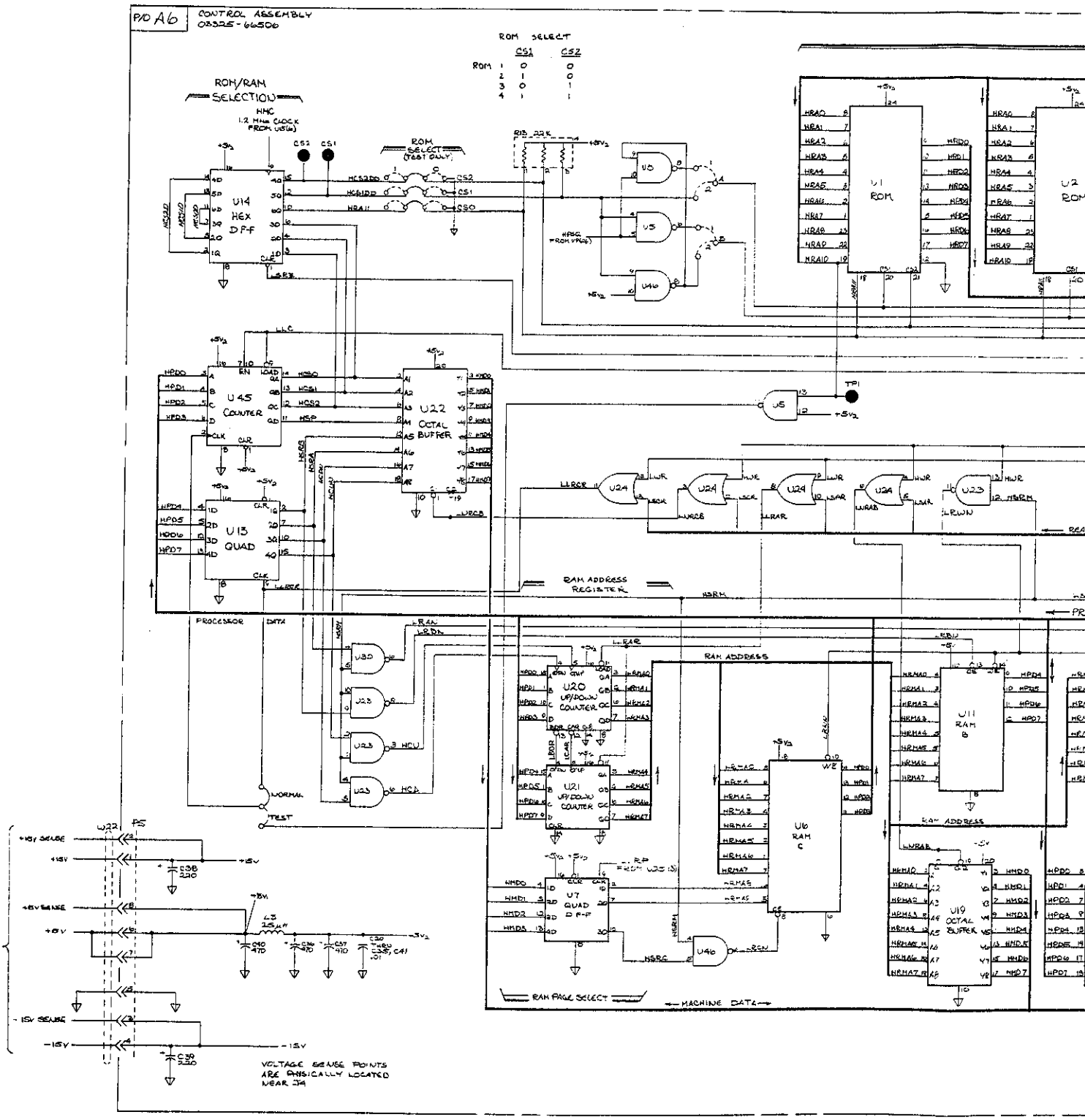

Fig 8-36
Sht 3 of 5

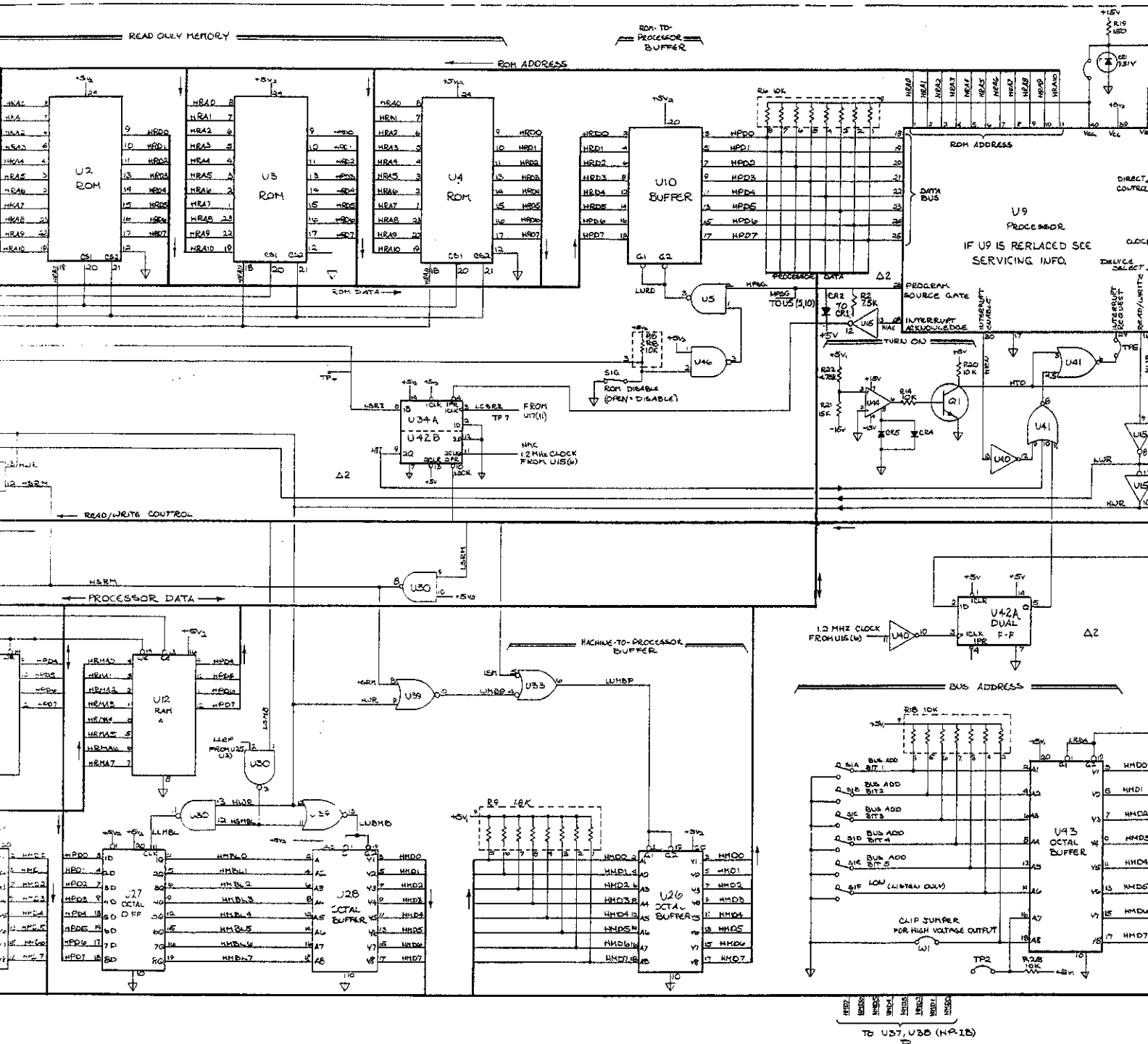

Fig 8-36
Sht 4 of 5

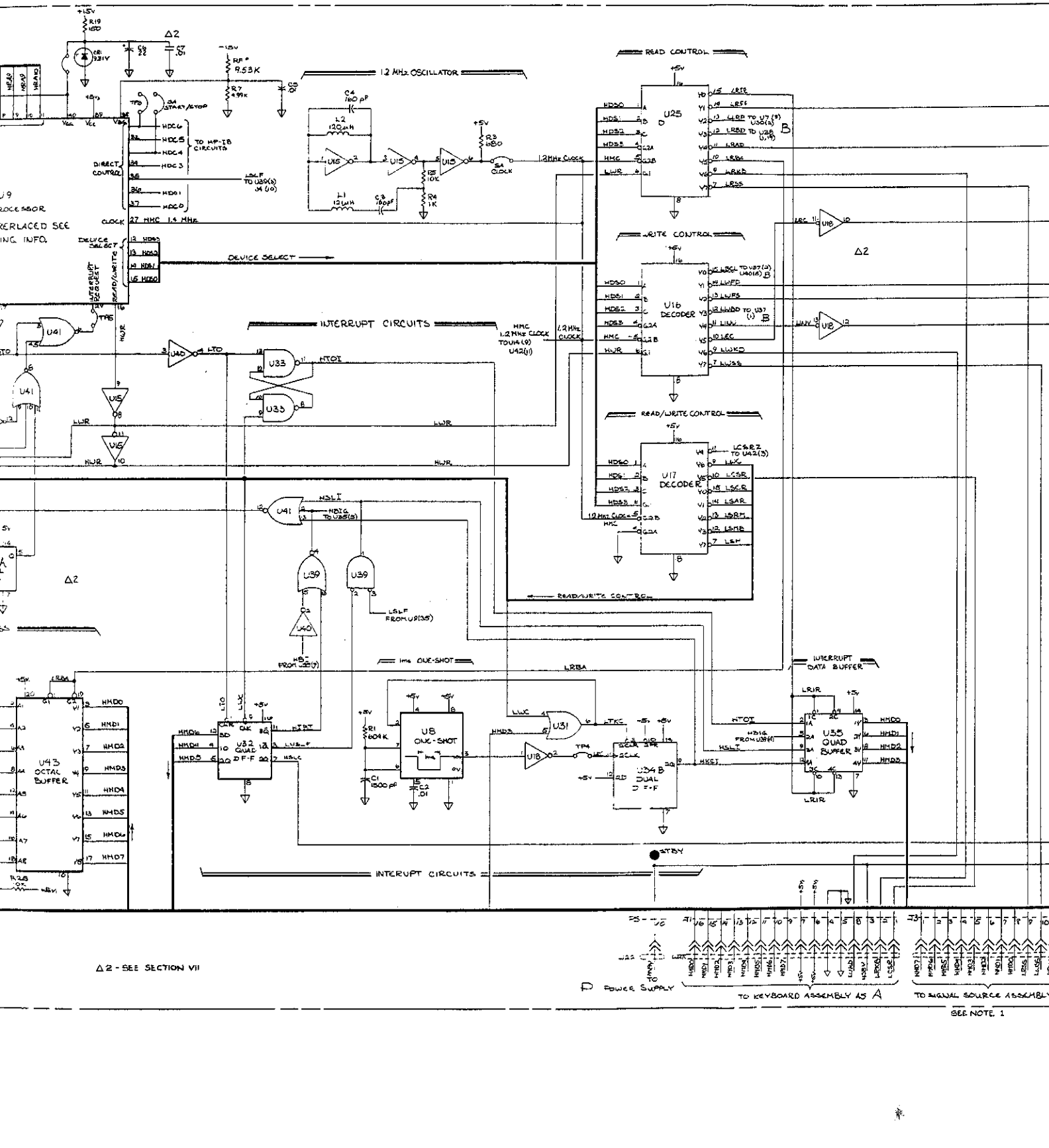

Fig 8-36
Sht 5 of 5

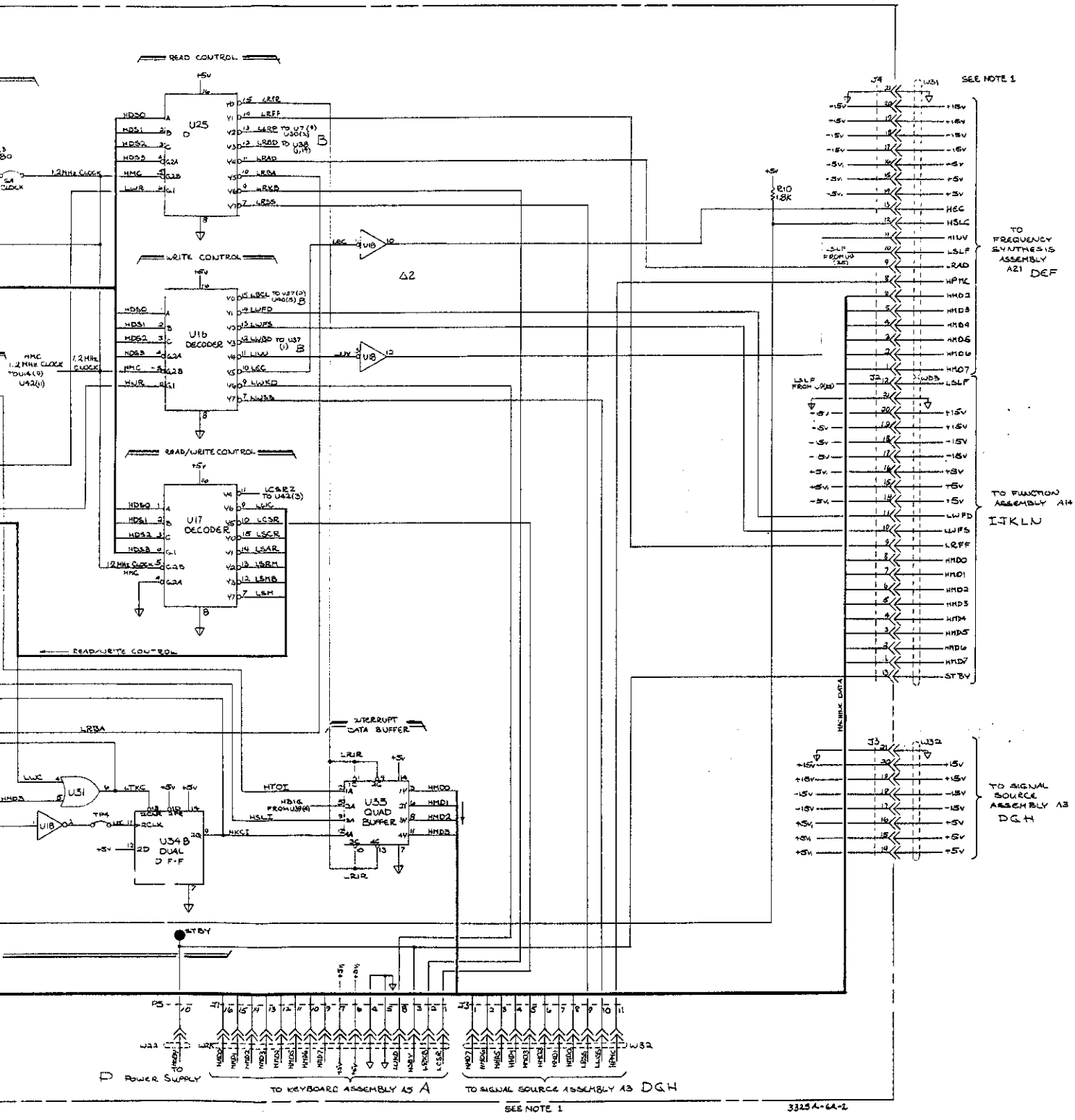

Figure 8-36. Control Circuits, A6.

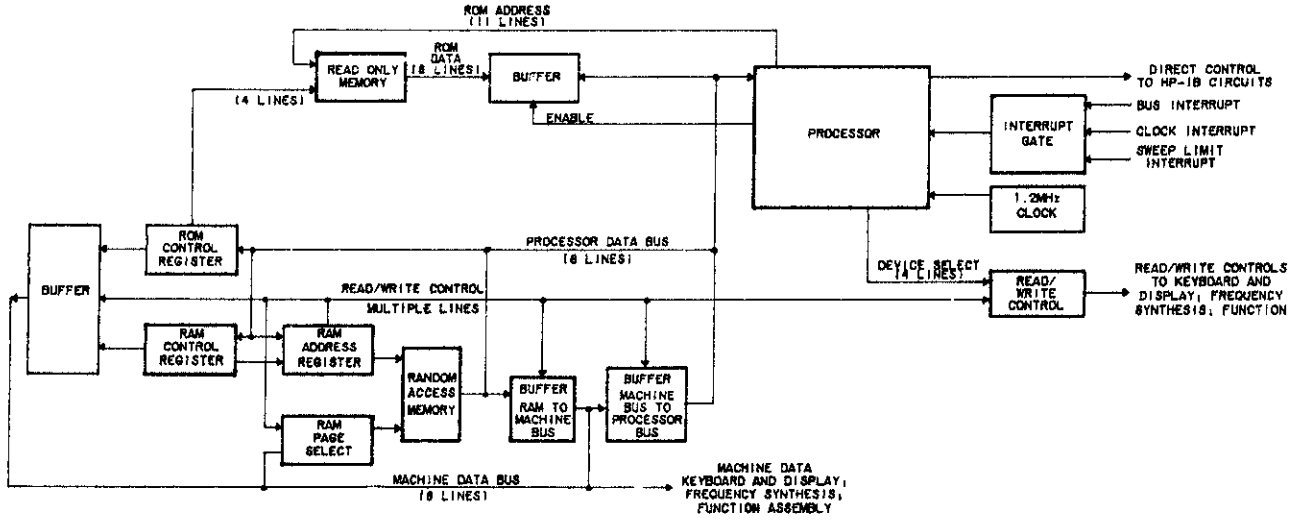

Control Circuits Block Diagram

SERVICE GROUP D - VOLTAGE CONTROLLED OSCILLATOR SHIELD.

The VCO circuit is covered by a shield consisting of a flat cover and an extrusion. Always set the POWER switch to STBY before removing or replacing the shield. When replacing the shield, make sure the key on the bottom edge of the shield is aligned with the hole in the printed circuit board.

Voltage Controlled Oscillator Troubleshooting.

"OSC FAIL" Display Indication.

a. With an oscilloscope, check the reference pulse signal at A21U1 pin 11. This should be a very narrow pulse with an amplitude of approximately 2 V p-p at a frequency of 100 kHz.

If this signal is correct, go to Step b.

If this signal is not correct, go to Service Group G.

CAUTION

Do not allow disconnected cable connectors to contact the printed circuit boards or components, or circuits may be damaged.

b. Check the +5V, +15V, and -15V power supply voltages at the following points:

+5V ----- C33 (Service Group F)

+15V ----- C10 (Service Group F)

-15V ----- C26 (Service Group F)

Moreover, when the problem has been isolated to the functional block, the first step should be a check of the power supply voltage into the functional block.

c. Make sure the VCO oscillates at the top and bottom of its frequency range. Disconnect the cable from A21J18A (cable marked 18 S-H). This is the VCO control voltage. Measure the frequency of the signal at A21U34 pin 14 and at A21Q161 collector. The frequency should be approximately 45MHz. If the frequency is not approximately 45MHz, check varicaps CR164 and CR166.

d. Place an external dc voltage (-3V to +10V) at the VCO input and note the following frequencies at the collector of Q161 and at U34 pin 14.

DC Voltage	Frequency
−3V	60.9MHz
+5V	42.6MHz
+10V	30 MHz

If the VCO frequency is not correct, disconnect the external DC power supply and measure the DC voltages noted on the VCO schematic diagram. Voltages should be within ±10%. (Voltages are measured with A21J18A still disconnected.)

If the VCO frequencies are correct, go to step e.

e. Reconnect the cable to A21J18A. Measure the voltage levels at A21U33 pins 1 and 7. The voltage at one of these pins may be at approximately +13V, and the other at a negative voltage. (If the frequency synthesis circuits are operating correctly, both pins will be negative.

f. Connect an oscilloscope to A21TP9.

If pin 1 of A21U33 is positive, and the signal at TP9 is always positive, the trouble is probably in the Integrator, Bias, or Sample/Hold circuits. Go to Service Group F.

If pin 1 of A21U33 is positive and the signal at TP9 is mostly negative, the trouble is probably in the ÷N.F Counter circuits, Service Group E, or the Phase Comparator, Service Group F.

If pin 7 of A21U33 is positive, and the signal at TP9 is always positive, the trouble is probably in the ÷N.F Counter circuits, Service Group E, or the Phase Comparator, Service Group F.

If pin 7 of A21U33 is positive, and the signal at TP9 is mostly negative, the trouble is probably in the Integrator, Bias, or Sample/Hold circuits. Go to Service Group F.

No Rear Panel AUX Output, or Incorrect AUX Frequency (Either One-Half or Two Times the Programmed Frequency).

a. Set function to sine, frequency to 10 MHz.

b. Measure voltage level at A3U18 pin 9. Should be at a TTL high level ($\geq +2.4$ V). If not, go to Step g.

c. Set frequency to 21 MHz. Voltage level at A3U18 pin 9 should be TTL low ($\leq +0.4$ V). Voltage at A3U18 pin 6 should be high. If either voltage is not correct go to Step g.

d. Set frequency to 29.999 999 999 MHz. Voltage levels should be the same as in Step c.

e. Set frequency to 30 MHz. Voltage at A3U18 pin 6 should be low, pin 9 should be low.

f. If all of the above levels are correct, the trouble is probably in A3U18, U19, C152, or R158.

g. If any of the above levels is incorrect, check input pins 12 and 13 of A3U10 for the presence of TTL level pulses.

If input pulses are present, A3U10 may be defective.

If input pulses are not present, go to Control Logic troubleshooting, Service Group C.

Designator	Board Location
C1	A
C2	A
C3	B
C4	B
C6	A
C7	C
C8	A
C9	C
C10	A
C11	C
C12	C
C13	A
C14	C
C15	A
C16	A
C17	B
C18	B
C19	C
C21	D
C22	A
C23	A
C24	A
C26	A
C27	A
C28	A
C29	C
C31	C
C32	C
C131	E
C132	F
C133	E
C134	F
C135	D
C136	F
C137	E
C138	E
C139	F
C141	D
C142	F
C143	E
C144	E
C145	E
C161	F
C162	G
C163	G
C164	G
C166	G
C167	G
C168	G
C169	G
C171	G
C172	G
C173	G
C174	G
C176	G
C177	G
C178	G
C179	G
C181	G
C182	G
C196	D
C197	D
CR1	B
CR2	B
CR3	B
CR4	B
CR5	C
CR6	C
CR7	C
CR8	B
CR9	B
CR11	B
CR12	C
CR13	C
CR15	C
CR16	C
CR17	B
CR18	C
CR19	C
CR131	D
CR161	G
CR162	G
CR163	G
CR164	G
CR166	G
J1	D
J8	A
J15	G
J16	C
J17A	A
J17B	B
J18A	A
J18B	E
L1	C
L2	D
L3	D
L131	F
L132	E
L133	E
L161	G
L162	G
L163	G
Q1	B
Q2	B
Q3	B
Q4	B
Q6	C
Q7	C
Q8	C
Q9	A
Q10	A
Q11	A
Q12	A
Q13	A
Q14	B
Q16	B
Q17	B
Q18	B
Q19	B
Q21	B
Q22	B
Q23	C
Q24	C
Q25	A
Q26	C
Q27	A
Q28	B
Q29	B
Q31	B
Q32	B
Q33	C
Q37	C
Q38	C
Q39	A
Q41	B
Q42	B
Q43	B
Q44	C
Q131	E
Q132	D
Q161	F
Q162	G
Q163	G
Q164	G
R1	A
R2	A
R3	A
R4	A
R6	A
R7	A
R8	B
R9	B
R11	B
R12	B
R13	B
R14	C
R16	C
R17	C
R18	C
R19	C
R21	C
R22	C
R23	C
R24	C
R26	A
R27	A
R28	A
R29	A
R31	A
R32	A
R33	B
R34	B
R36	C
R37	C
R38	C
R39	C
R41	C
R42	C
R43	C
R44	C
R46	A
R47	A
R48	A
R49	A
R51	A
R52	A
R53	C
R54	C
R56	C
R57	A
R58	A
R59	A
R61	A
R62	A
R63	A
R64	A
R65	A
R66	A
R67	A
R68	B
R69	B
R70	A
R71	B
R72	B
R73	B
R74	C
R75	B
R76	C
R77	C
R78	C
R79	C
R81	C
R82	C
R83	C
R84	C
R86	C
R87	C
R88	C
R89	A
R91	B
R92	B
R93	B
R94	B
R96	B
R97	C
R98	C
R99	B
R101	C
R102	C
R103	C
R104	A
R106	A
R107	A
R108	A
R109	B
R111	B
R112	B
R113	B
R114	B
R116	B
R117	B
R118	C
R119	C
R121	C
R122	C
R123	C
R124	C
R126	C
R132	E
R133	E
R134	F
R135	D
R136	F
R137	F
R138	D
R140	D
R141	D
R142	E
R143	E
R144	D
R145	D
R146	E
R147	E
R148	E
R149	F
R151	F
R152	F
R161	F
R162	G
R163	F
R164	F
R165	F
R166	F
R167	F
R168	F
R169	F
R170	G
R171	F
R172	F
R173	F
R174	G
R176	G
R177	G
R178	G
R179	G
R181	G
R182	G
R183	G
R184	G
R186	G
R187	G
R188	G
R189	G
R191	G
R192	G
R193	G
R194	G
R196	G
R197	G
R198	G
R199	G
R200	G
R201	G
TP1	E
TP2	D
TP3	D
TP5	E
TP6	F
TP7	D
TP8	E
TP9	B
TP10	A
TP11	A
U1	A
U2	C
U3	B
U4	C
U5	D
U6	A
U7	E
U8	F
U9	D
U10	C
U11	E
U12	F
U13	F
U14	D
U15	E
U17	F
U18	F
U19	D
U21	E
U22	F
U23	F
U24	E
U26	F
U27	F
U28	D
U29	E
U30	F
U31	F
U32	F
U33	F
U34	G
W1	A
W2	B
W3	F

A21 Component Locations

Designator	Board Location
C1	A
C2	A
C3	A
C4	A
C6	A
C7	A
C8	A
C9	A
C11	A
C12	B
C13	B
C14	B
C16	B
C17	B
C18	B
C19	B
C21	B
C22	B
C23	B
C24	C
C26	C
C27	C
C28	B
C29	B
C31	B
C32	C
C33	C
C34	B
C36	C
C37	C
C38	C
C39	C
C41	C
C42	C
C43	C
C44	C
C46	C
C47	C
C48	C
C49	D
C51	D
C52	D
C53	D
C54	D
C56	D
C57	D
C58	D
C59	E
C61	E
C101	E
C102	E
C103	E
C104	E
C106	E
C107	E
C108	E
C109	E
C111	E
C112	E
C113	E
C114	E
C116	F
C117	F
C118	F
C119	F
C121	F
C122	F
C123	F
C124	F
C126	F
C127	F
C128	F
C129	F
C151	G
C152	G
C153	G
C154	G
C156	G
C157	G
C158	G
CR1	A
CR2	A
CR3	A
CR4	A
CR6	A
CR7	B
CR8	C
CR101	F
J1	C
J2	D
J3	G
J7	D
J8	B
J9	A
J10	A
J11	A
J15	G
J23	C
J24	D
L1	A
L2	B
L3	B
L4	C
L5	B
L6	B
L7	B
L8	C
L9	C
L101	E
L102	E
L103	E
L104	E
L105	E
L106	E
L107	F
L108	F
L109	F
L111	F
L112	F
L113	F
L114	F
L116	F
L117	F
L151	G
L152	G
L153	G
P2	D
Q1	A
Q2	B
Q3	B
Q4	C
Q6	E
Q101	E
Q102	E
R1	A
R2	B
R3	A
R6	A
R7	A
R8	A
R9	A
R10	A
R11	A
R12	A
R13	A
R14	A
R16	A
R17	B
R18	B
R19	B
R21	B
R22	B
R23	B
R24	B
R26	B
R27	B
R28	B
R29	B
R30	B
R32	B
R33	C
R34	C
R36	C
R37	C
R38	C
R39	C
R41	C
R42	C
R43	C
R44	C
R45	C
R46	C
R47	C
R48	C
R49	C
R56	D
R57	D
R58	D
R59	D
R61	D
R62	D
R63	D
R64	D
R66	D
R67	D
R68	D
R69	D
R70	C
R71	D
R72	C
R73	D
R74	D
R76	D
R77	D
R78	D
R79	D
R81	D
R82	D
R83	D
R84	D
R86	D
R87	D
R88	D
R89	D
R91	D
R92	D
R93	D
R101	E
R102	E
R103	E
R104	E
R106	E
R107	E
R108	E
R109	E
R111	E
R112	E
R113	F
R114	F
R115	F
R116	F
R117	F
R118	F
R119	F
R121	F
R122	F
R123	F
R151	G
R153	G
R154	G
R156	G
R157	G
R158	G
R159	G
T1	F
T2	F
TP1	B
TP2	C
TP3	C
TP4	D
TP6	E
TP7	E
U1	A
U2	A
U3	A
U4	A
U5	B
U6	B
U7	B
U8	B
U9	C
U10	D
U11	D
U12	D
U13	D
U14	D
U15	E
U16	F
U17	G
U18	G
U19	G
Y1	C
Norm/Test	D

A3 Component Locations

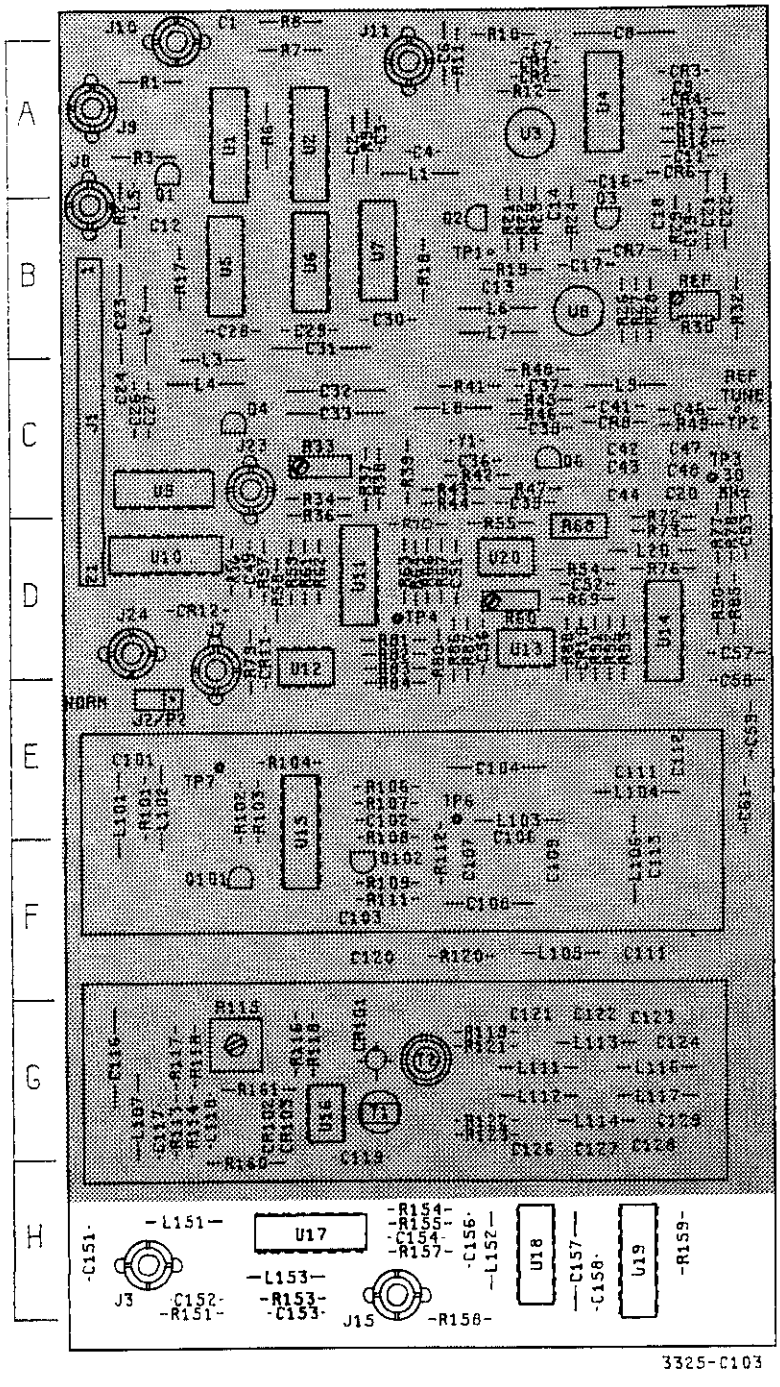

A3
03325-66503
Rev C

Fig 8-37
Sht 1 of 5

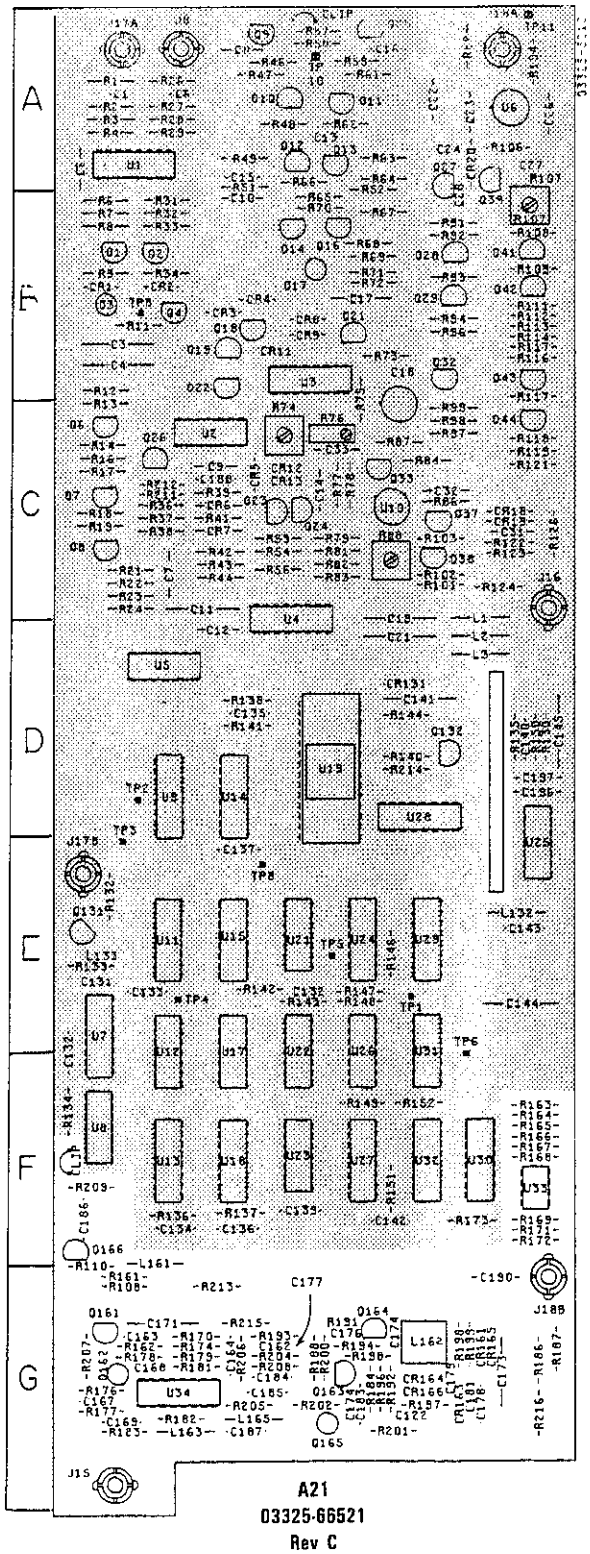

Fig 8-37
Sht 2 of 5

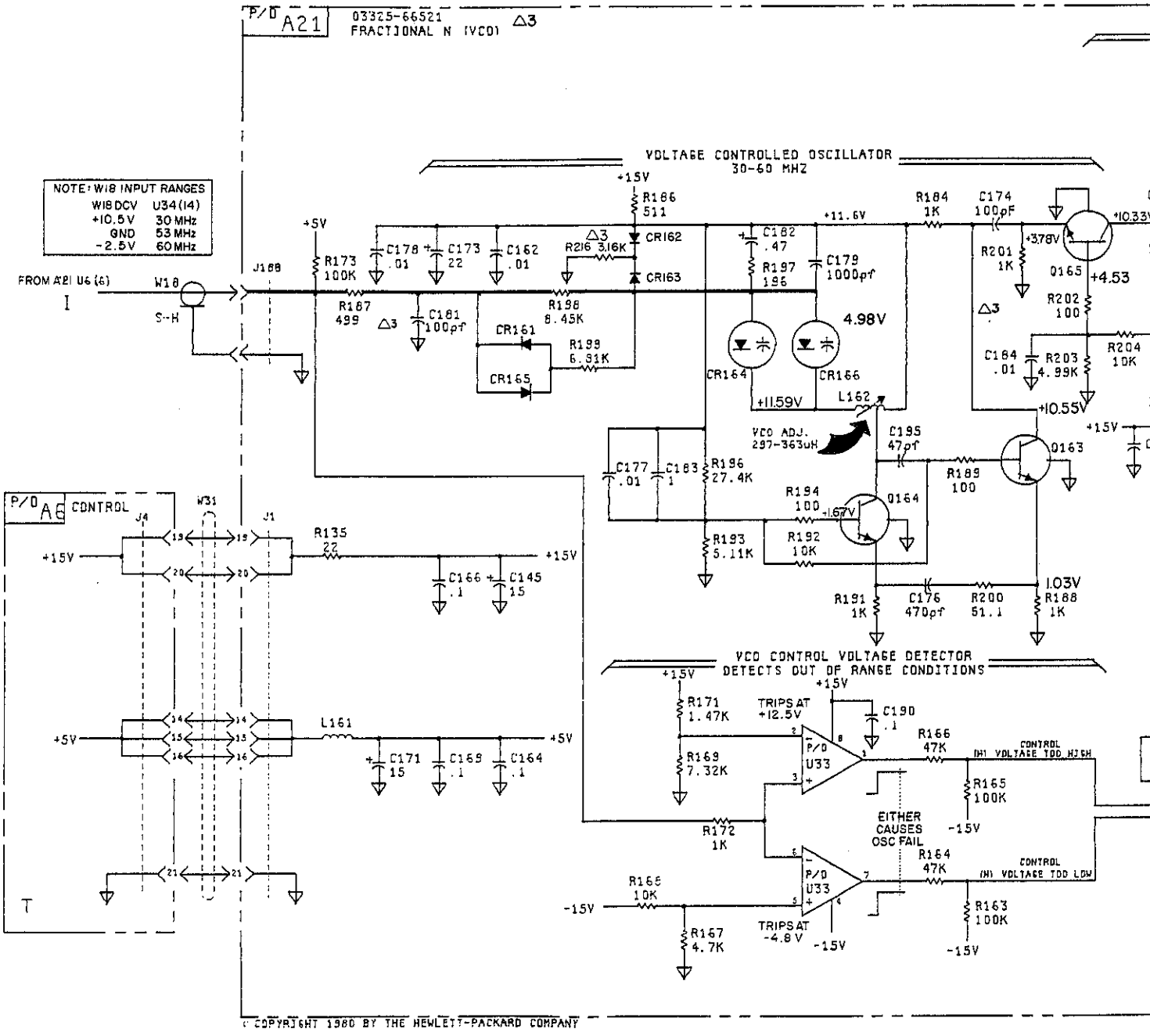

Fig 8-37
Sht 3 of 5

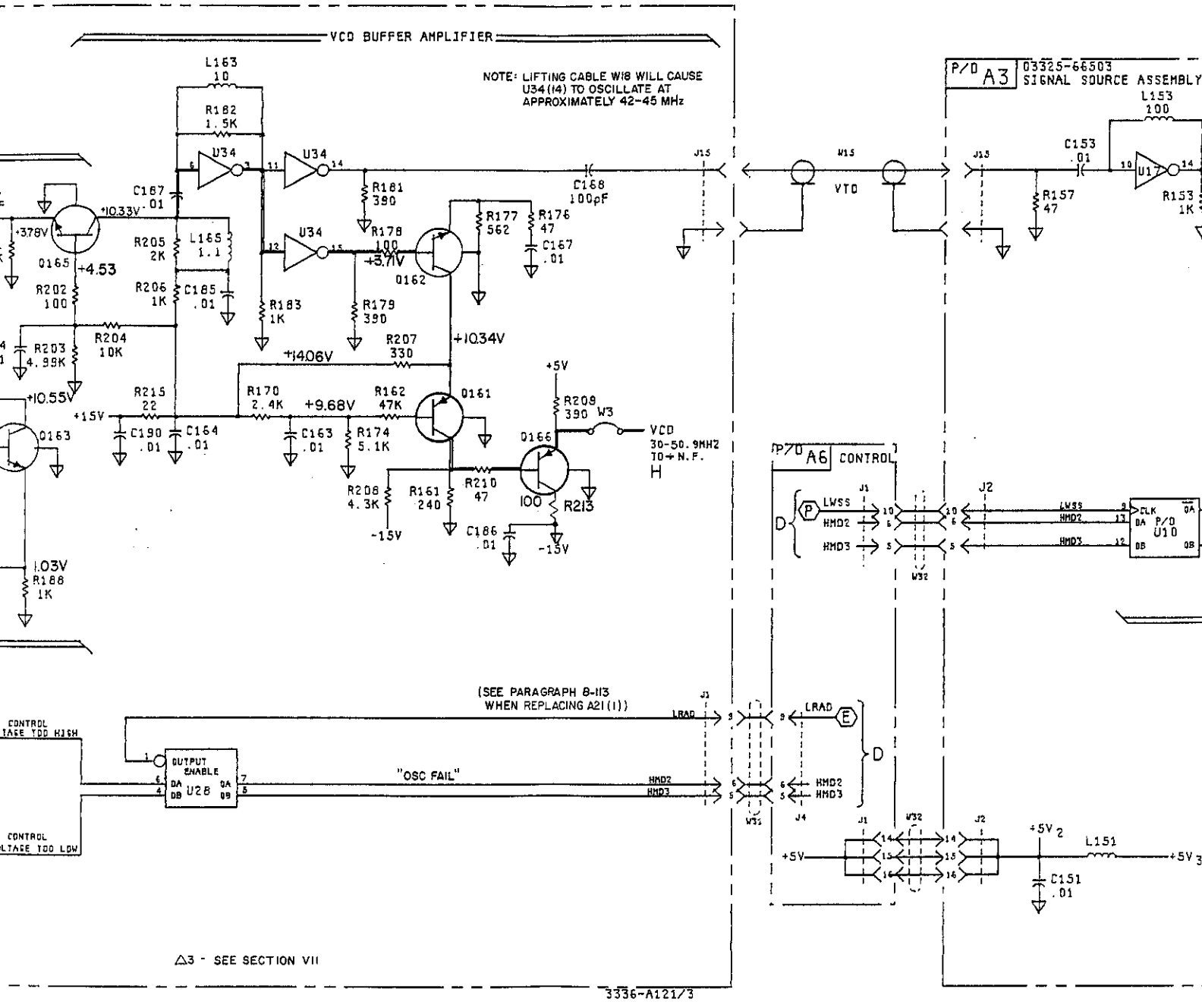

Fig 8-37
Sht 4 of 5

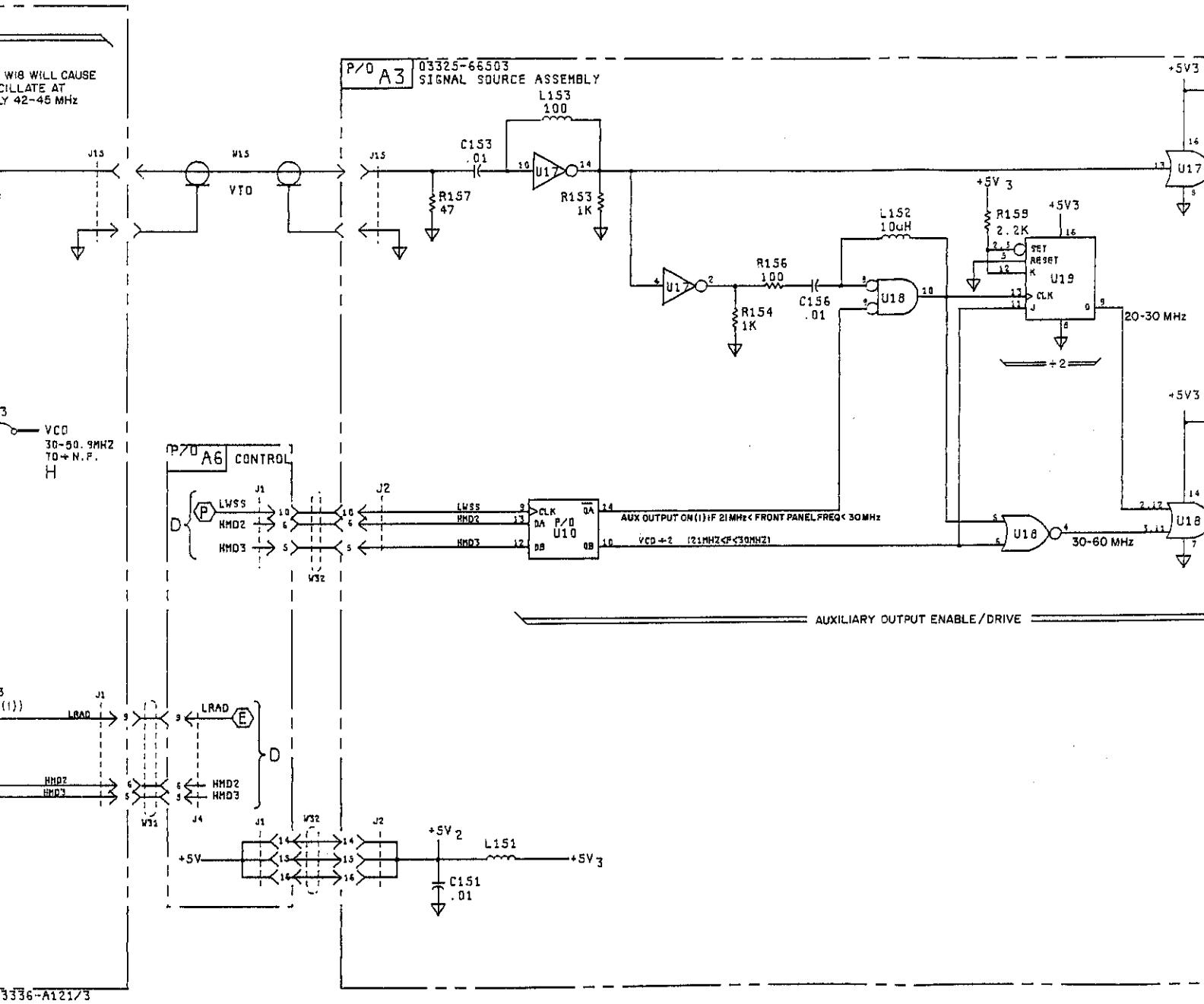

Fig 8-37
Sht 5 of 5

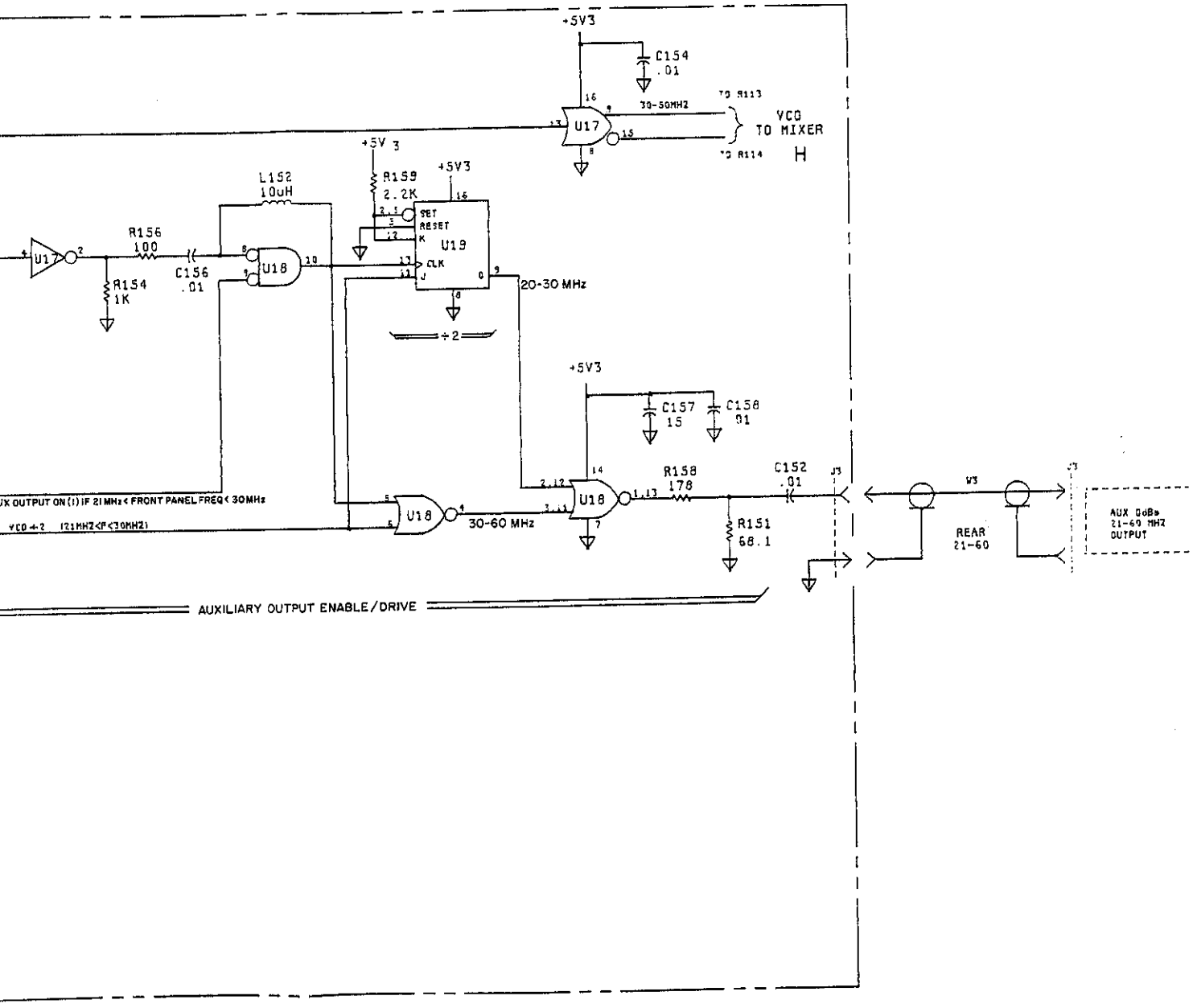

Figure 8-37, VCO, A21, and VCO Buffer, A3.
8-D-7/8-D-8

SERVICE GROUP E - ÷N.F COUNTER.

÷N.F Counter Troubleshooting.

CAUTION

Do not allow disconnected cable connectors to contact the printed circuit boards or components, or circuits may be damaged.

a. To check the ÷N circuitry, program the front panel for a frequency of 10MHz and disconnect cable W18 at J18A.

b. Place an external DC voltage source at the input to the VCO (-3V to +10V), and monitor the waveform at U1 pin 6. The 2Vp-p narrow pulse should begin to approach a frequency of 100kHz as the external DC control voltage is varied.

If the frequency does not approach 100kHz, troubleshoot the ÷N circuitry (step c). Note that the frequency will approach 100kHz for every N number programmed into the 3325 and with the appropriate DC level at the VCO input.

If the frequency at U1 pin 6 approaches 100kHz and the problem appears to be digitally related, check that the API current sources are getting the correct signals and that the FETs are not leaking (see Service Group F).

c. Disconnect the external power supply. Leave cable W18 disconnected at A21J18A.

d. Measure and note the frequency of the VCO signal at jumper W3. This signal should be approximately 45MHz.

e. Connect test points A21TP6 and A21TP8 to ground. This disables the ÷N Shift Register and the Pulse Remove circuits.

f. Measure the frequency at each of the following points in order, and determine the relationship to the VCO frequency at W3 (step d). Replace any defective components.

A21TP1 should be VCO ÷ 2. If not correct, check A21U32 and A21U27 for signal transitions at the input and output pins.

A21TP2 should be VCO ÷ 10. If not correct, check A21U13 and A21U18.

A21U21 pin 8 should be VCO ÷ 100. If not, check A21U9.

A21TP3 should be VCO ÷ 1000. If not correct, check A21U9, A21U11, A21U21, and A21U22.

A21TP4 should be VCO ÷ 1000. If not, check A21U12 and A21U22.

A21TP5 should be VCO ÷ 10. If not, check A21U24.

A21TP7 should be VCO ÷ 1000. If not, check A21U29.

A21Q131 collector should be VCO ÷ 1000 (very narrow pulse at approximately 2Vp-p). If not, check A21U26, A21U27, A21Q131, and A21C131.

A21U19 pins 2, 3, 4, 5, 6, 10, and 11 should be VCO ÷ 1000. If not, A21U19 is probably defective.

g. If all of the above signals are correct, check for the presence of input pulses at A21U19, pins 20 through 23.

h. Reconnect cable to A21J18A. Press the START CONT key and check for the presence of pulses at A21U19, pins 11, 13, 14, 15, 16, and 17.

i. Disconnect ground from A21TP6 and A21TP8. While in continuous sweep mode, check for the presence of pulses at the input pins, output pins, and clock pins of A21U14 and A21U15. If pulses appear at the input pins and clock inputs and the level at the clear inputs (pin 1) is high, replace the defective latch IC. If pulses are also present at the outputs, the gates in the ÷ 5 Counter circuit (A21U12, A21U17, A21U23) may be defective.

Designator	Board Location
C1	A
C2	A
C3	B
C4	B
C6	A
C7	C
C8	A
C9	C
C10	A
C11	C
C12	C
C13	A
C14	C
C15	A
C16	A
C17	B
C18	B
C19	C
C21	D
C22	A
C23	A
C24	A
C26	A
C27	A
C28	A
C29	C
C31	C
C32	C
C131	E
C132	F
C133	E
C134	F
C135	D
C136	F
C137	E
C138	E
C139	F
C141	D
C142	F
C143	E
C144	E
C145	E
C161	F
C162	G
C163	G
C164	G

Designator	Board Location
C166	G
C167	G
C168	G
C169	G
C171	G
C172	G
C173	G
C174	G
C176	G
C177	G
C178	G
C179	G
C181	G
C182	G
C196	D
C197	D
CR1	B
CR2	B
CR3	B
CR4	B
CR5	C
CR6	C
CR7	C
CR8	B
CR9	B
CR11	B
CR12	C
CR13	C
CR15	C
CR16	C
CR17	B
CR18	C
CR19	C
CR131	D
CR161	G
CR162	G
CR163	G
CR164	G
CR166	G
J1	D
J8	A
J15	G
J16	C
J17A	A
J17B	B
J18A	A
J18B	E

Designator	Board Location
L1	C
L2	D
L3	D
L131	F
L132	E
L133	E
L161	G
L162	G
L163	G
Q1	B
Q2	B
Q3	B
Q4	B
Q6	C
Q7	C
Q8	C
Q9	A
Q10	A
Q11	A
Q12	A
Q13	A
Q14	B
Q16	B
Q17	B
Q18	B
Q19	B
Q21	B
Q22	B
Q23	C
Q24	C
Q25	A
Q26	C
Q27	A
Q28	B
Q29	B
Q31	B
Q32	B
Q33	C
Q37	C
Q38	C
Q39	A
Q41	B
Q42	B
Q43	B
Q44	C

Designator	Board Location
Q131	E
Q132	D
Q161	F
Q162	G
Q163	G
Q164	G
R1	A
R2	A
R3	A
R4	A
R6	A
R7	A
R8	B
R9	B
R11	B
R12	B
R13	B
R14	C
R16	C
R17	C
R18	C
R19	C
R21	C
R22	C
R23	C
R24	C
R26	A
R27	A
R28	A
R29	A
R31	A
R32	A
R33	B
R34	B
R36	C
R37	C
R38	C
R39	C
R41	C
R42	C
R43	C
R44	C
R46	A
R47	A
R48	A
R49	A

Designator	Board Location
R51	A
R52	A
R53	C
R54	C
R56	C
R57	A
R58	A
R59	A
R61	A
R62	A
R63	A
R64	A
R65	A
R66	A
R67	A
R68	B
R69	B
R70	A
R71	B
R72	B
R73	B
R74	C
R75	B
R76	C
R77	C
R78	C
R79	C
R81	C
R82	C
R83	C
R84	C
R86	C
R87	C
R88	C
R89	A
R91	B
R92	B
R93	B
R94	B
R96	B
R97	C
R98	C
R99	B
R101	C
R102	C
R103	C
R104	A

Fig 8-40
Sht 1 of 5

Designator	Board Location	Designator	Board Location	Designator	Board Location	Designator	Board Location	Designator	Board Location
C1	A	C111	E	L106	E	R41	C	R121	F
C2	A	C112	E	L107	F	R42	C	R122	F
C3	A	C113	E	L108	F	R43	C	R123	F
C4	A	C114	E	L109	F	R44	C		
						R45	C	R151	G
C6	A	C116	F	L111	F				
C7	A	C117	F	L112	F	R46	C	R153	G
C8	A	C118	F	L113	F	R47	C	R154	G
C9	A	C119	F	L114	F	R48	C		
						R49	C	R156	G
C11	A	C121	F	L116	F			R157	G
C12	B	C122	F	L117	F	R56	D	R158	G
C13	B	C123	F			R57	D	R159	G
C14	B	C124	F	L151	G	R58	D		
				L152	G	R59	D	T1	F
C16	B	C126	F	L153	G			T2	F
C17	B	C127	F			R61	D		
C18	B	C128	F	P2	D	R62	D	TP1	B
C19	B	C129	F			R63	D	TP2	C
				Q1	A	R64	D	TP3	C
C21	B	C151	G	Q2	B			TP4	D
C22	B	C152	G	Q3	B	R66	D		
C23	B	C153	G	Q4	C	R67	D	TP6	E
C24	C	C154	G	Q6	E	R68	D	TP7	E
C26	C					R69	D		
C27	C	C156	G	Q101	E	R70	C	U1	A
C28	B	C157	G	Q102	E			U2	A
C29	B	C158	G			R71	D	U3	A
				R1	A	R72	C	U4	A
C31	B	CR1	A	R2	B	R73	D	U5	B
C32	C	CR2	A	R3	A	R74	D		
C33	C	CR3	A					U6	B
C34	B	CR4	A	R6	A	R76	D	U7	B
				R7	A	R77	D	U8	B
C36	C	CR6	A	R8	A	R78	D	U9	C
C37	C	CR7	B	R9	A	R79	D	U10	D
C38	C	CR8	C	R10	A				
C39	C					R81	D	U11	D
		CR101	F	R11	A	R82	D	U12	D
C41	C			R12	A	R83	D	U13	D
C42	C	J1	C	R13	A	R84	D	U14	D
C43	C	J2	D	R14	A			U15	E
C44	C	J3	G			R86	D		
				R16	A	R87	D	U16	F
C46	C	J7	D	R17	B	R88	D	U17	G
C47	C	J8	B	R18	B	R89	D	U18	G
C48	C	J9	A	R19	B			U19	G
C49	D	J10	A			R91	D		
		J11	A	R21	B	R92	D	Y1	C
C51	D			R22	B	R93	D		
C52	D	J15	G	R23	B			Norm/Test	D
C53	D	J23	C	R24	B	R101	E		
C54	D	J24	D			R102	E		
				R26	B	R103	E		
C56	D	L1	A	R27	B	R104	E		
C57	D	L2	B	R28	B				
C58	D	L3	B	R29	B	R106	E		
C59	E	L4	C	R30	B	R107	E		
		L5	B			R108	E		
C61	E			R32	B	R109	E		
		L6	B	R33	C				
C101	E	L7	B	R34	C	R111	E		
C102	E	L8	C			R112	E		
C103	E	L9	C	R36	C	R113	F		
C104	E			R37	C	R114	F		
		L101	E	R38	C	R115	F		
C106	E	L102	E	R39	C				
C107	E	L103	E			R116	F		
C108	E	L104	E			R117	F		
C109	E	L105	E			R118	F		
						R119	F		

A3 Component Locations

Fig 8-40
Sht 2 of 5

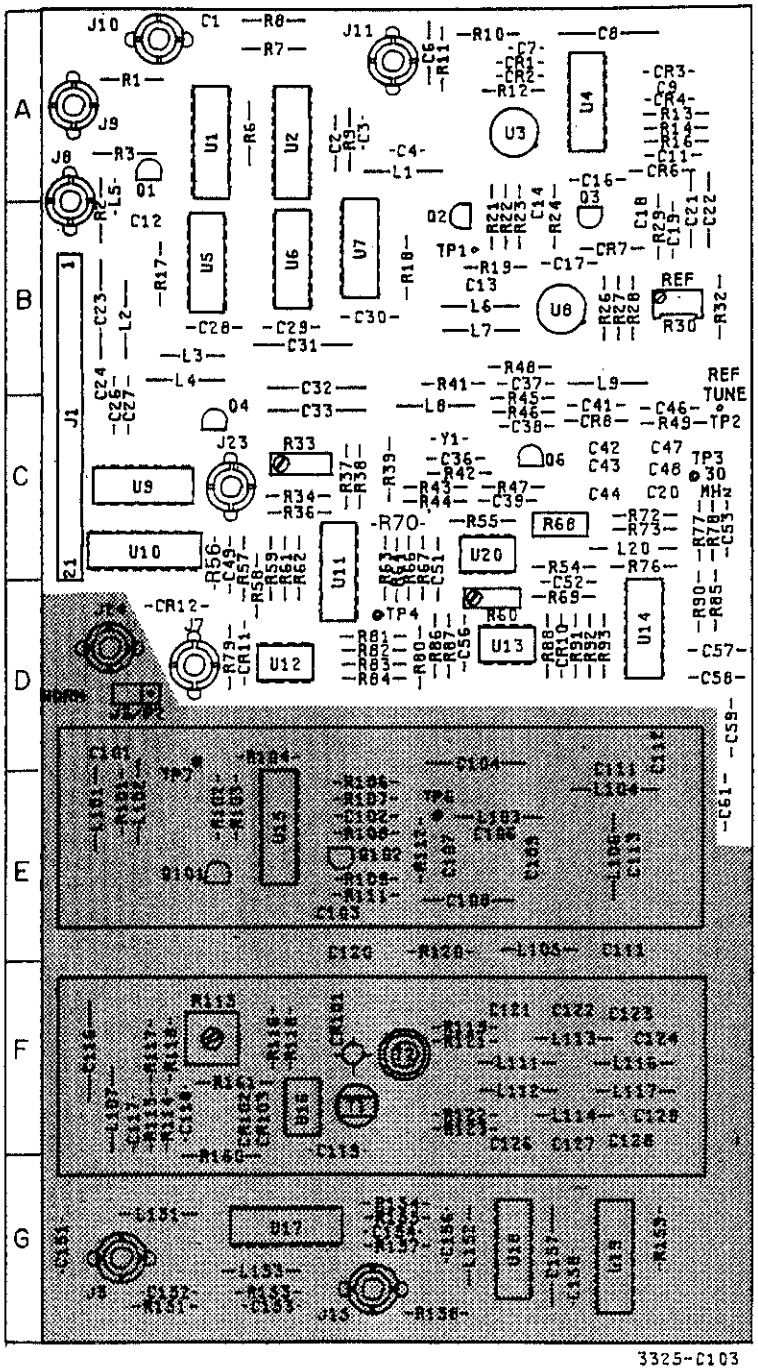

A3
03325-66503
Rev C

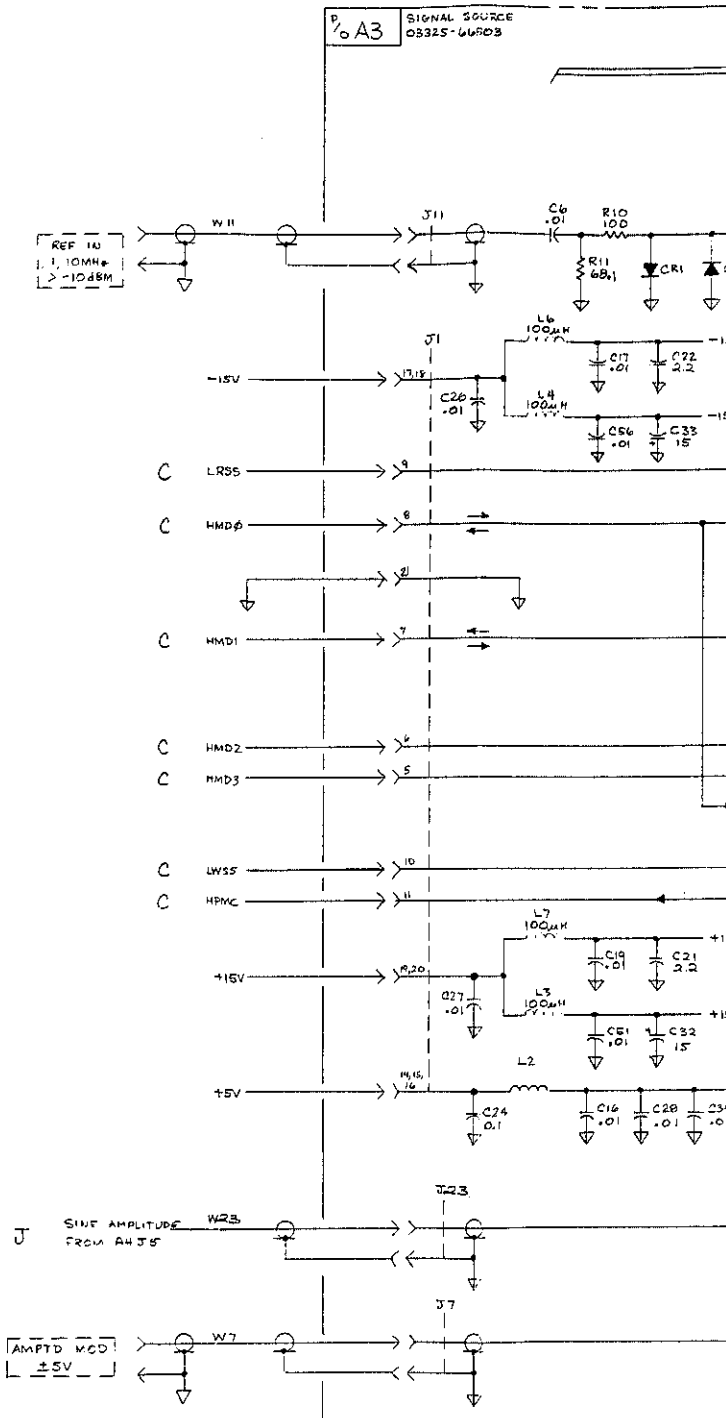

COPYRIGHT 1977 BY HEWLETT-PACKARD COMPAN

Fig 8-40
Sht 3 of 5

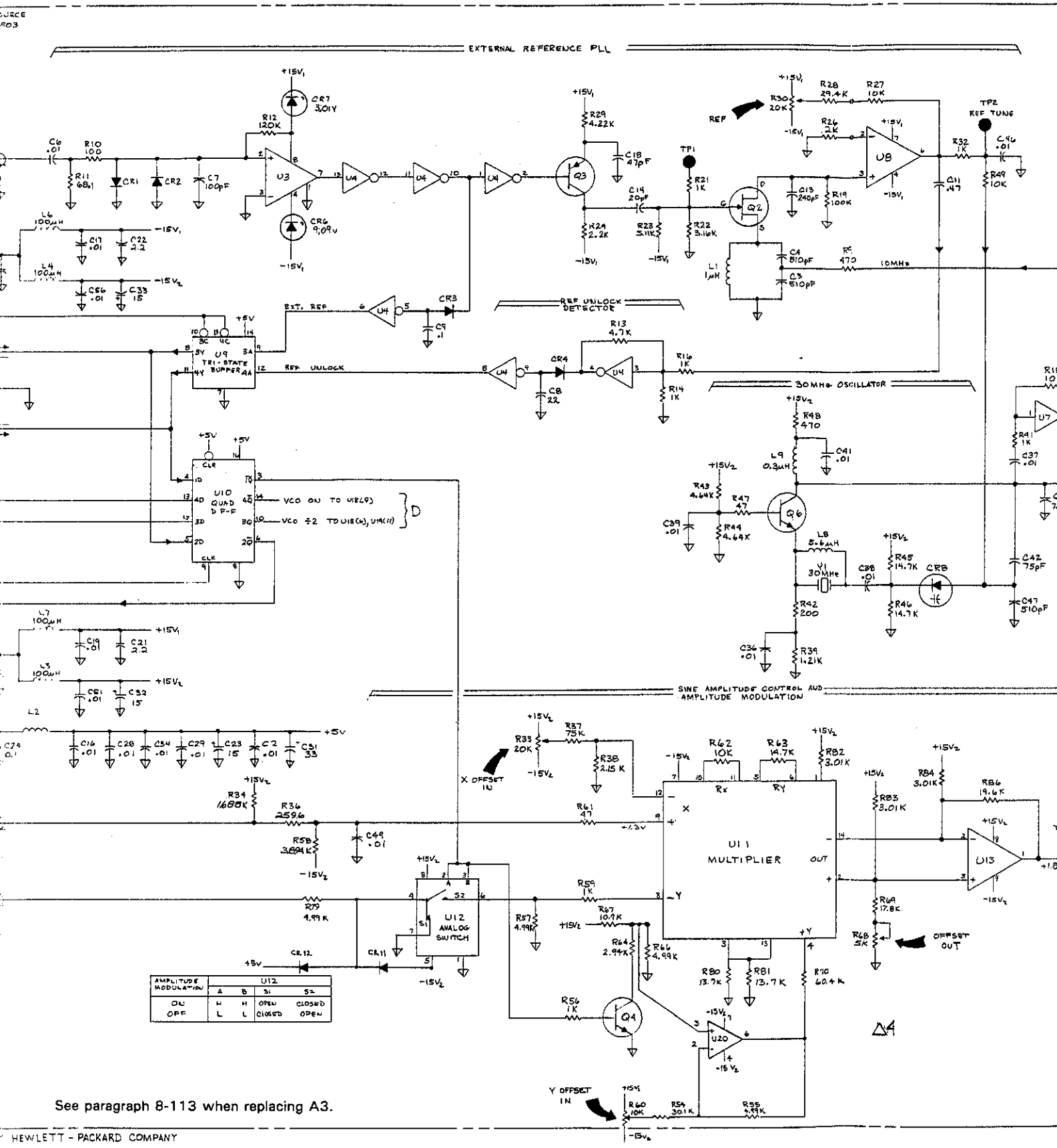

See paragraph 8-113 when replacing A3.

Fig 8-40
Sht 4 of 5

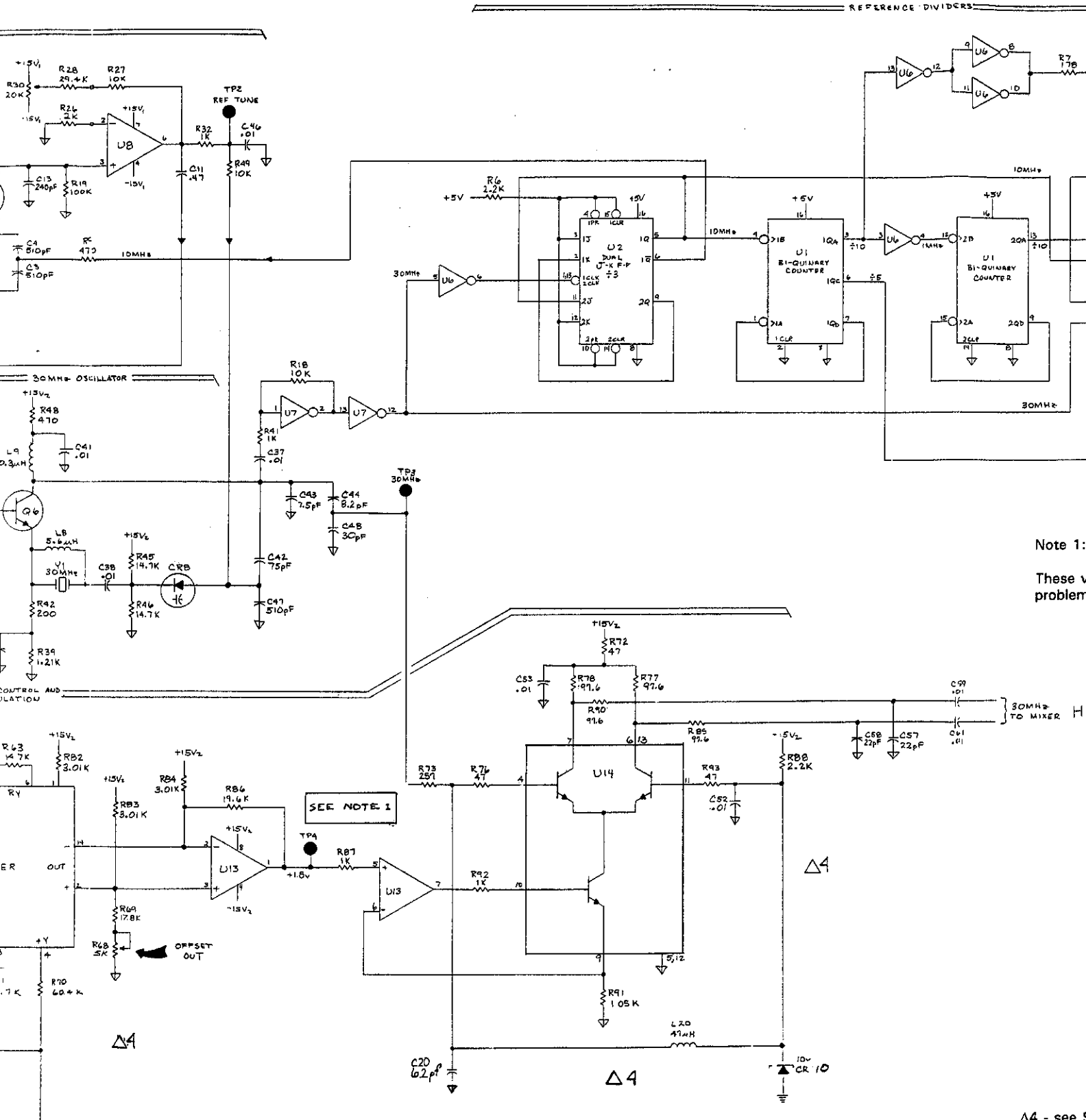

Note 1:

These v
problem

Δ4 - see 5

Fig 8-40
Sht 5 of 5

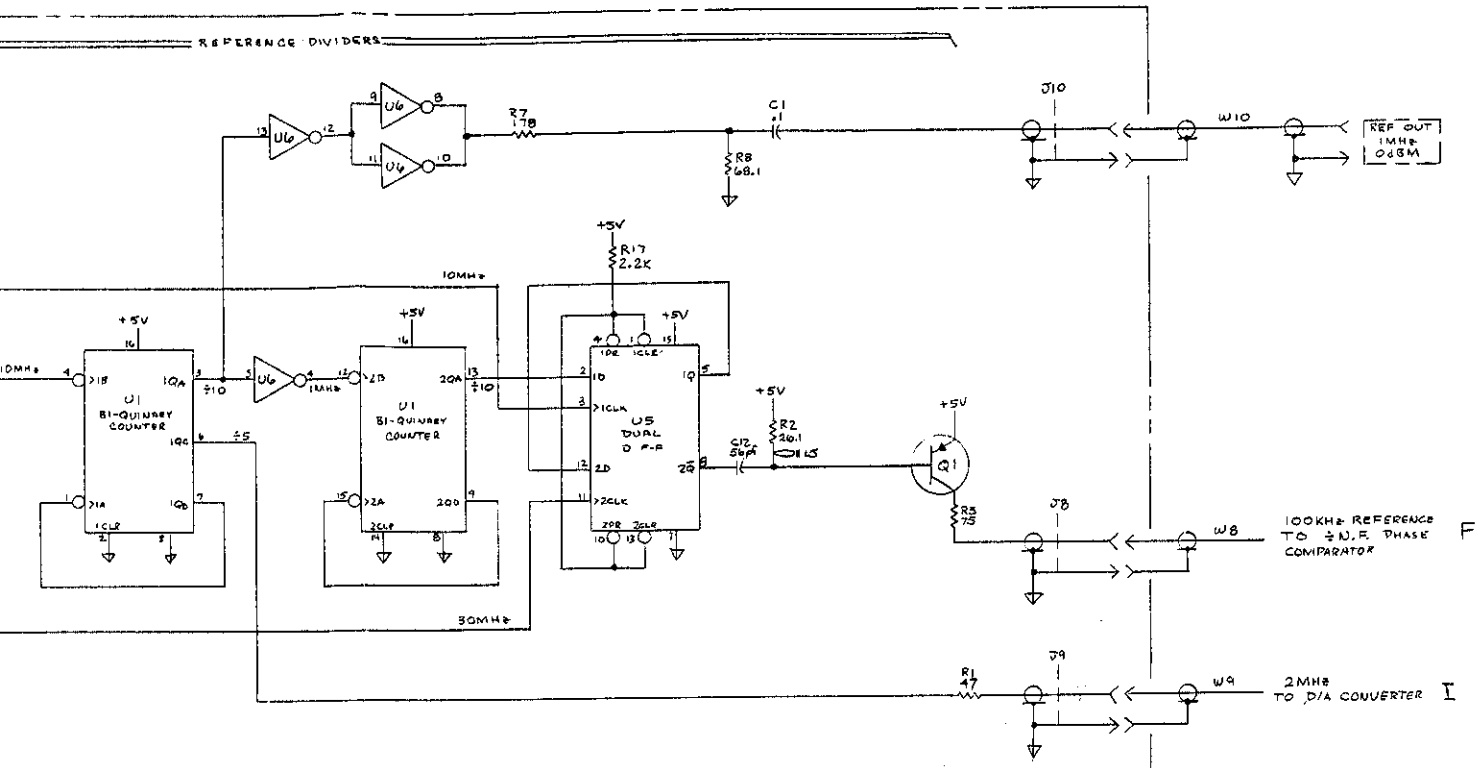

Note 1:

These voltage levels are useful when troubleshooting amplitude problems (frequency 1kHz, TP ACD grounded, voltages p-p).

Programmed Amplitude	TP4 0Vdc Offset	TP4 2Vdc Offset
1Vp-p	1.92	0.616
2Vp-p	3.88	1.27
3Vp-p	1.92	1.92
4Vp-p	2.57	2.57
5Vp-p	3.23	3.23
6Vp-p	3.88	3.88
7Vp-p	4.53	—
8Vp-p	5.18	—
9Vp-p	5.84	—
10Vp-p	6.45	—

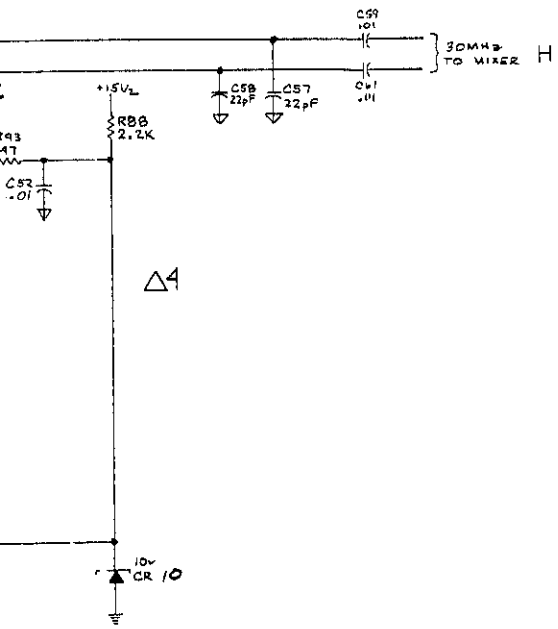

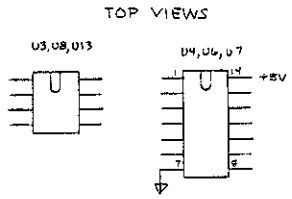

Δ4 - see Section VII

3325A - 3A-1

Figure 8-40. 30 MHz Reference and Dividers, A3.
8-G-3/8-G-4

SERVICE GROUP F - FRACTIONAL N ANALOG CIRCUITS.

Fractional N Analog Troubleshooting.

If pin 1 of A21U33 is positive (in Service Group D Troubleshooting) and the signal at TP9 is always positive, or if pin 7 of A21U33 is positive and the signal at TP9 is mostly negative, the trouble is probably in the Integrator, Bias, or Sample/Hold circuits.

The following waveforms may be observed at the points indicated. If the Bias/API waveforms are correct, but the Integrator output is not correct, the trouble is probably in the Integrator, Current Sources, or the Sample/Hold circuit.

Set the frequency to 1 kHz, function to sine, or switch the power from STBY to ON, and observe the waveforms below.

a. If the Counter circuit and VCO are working correctly but the VCO is still not tuning properly, set the frequency to 1.1MHz and the amplitude to 10Vp-p and test for the correct signal at A21TP10 (see Figure 8-F-1). Make sure cable W18 is connected from the Sample and Hold output to the VCO input.

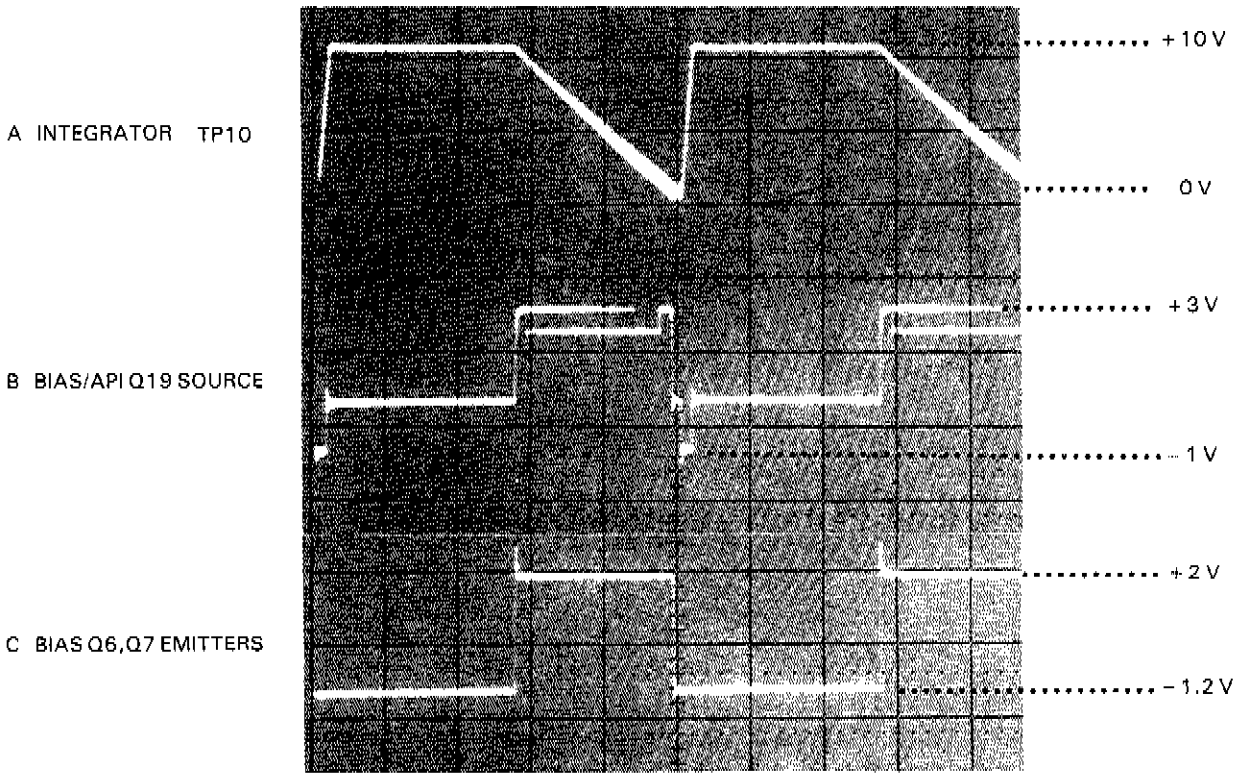

b. If the waveform at TP10 is rounded or slightly distorted, make sure the Sample/Hold FETs are not leaking.

c. If the waveform at TP10 is bad, test the integrator and Sample/Hold circuitry. Heat sink and remove A21CR4 and A21CR8 to open the phase locked loop at the integrator input. These diodes are a prime noise source especially when overheated. Install jumper W2. This jumper places a 1kΩ resistor in parallel with C17, changing the integrator to a transconductance amplifier (Eout = -1000 x Iin). While monitoring the integrator output at TP10 and the Sample/Hold output at TP11, inject various currents from -12mA to +5mA into the integrator input. An easy way to accomplish this is to use a dc power supply with a 1kΩ resistor in series with its output. Every volt from the power supply will inject 1mA into the integrator. The voltage at TP10 and TP11 should equal the power supply voltage only it will be opposite in polarity.

If the voltage at TP10 is correct but the voltage at TP11 is not, troubleshoot the Sample/Hold circuitry. Apply +5V to A21U6(3). The output voltage at TP11 should be +5V. If not, replace U6. If the voltage at TP11 is correct, momentarily short across A21C24, then apply the +5V at the junction of A21Q27 (drain) and A21Q39 (source). The voltage at TP11 should be +5V. If not, check for the presence of the Sample/Hold Control signal from the base of A21Q44 through to the gates of Q27 and Q39. This signal should be a 0.3 to 0.6μs TTL pulse at 100kHz. The pulse width is derived from the VCO frequency (VCO/10) and the repetition rate is derived from VCO/N.F.

d. If the integrator and Sample/Hold circuitry appear to be operating properly, check the following circuits in the order given to isolate the faulty sub-block.

1. Check the phase comparator output at A21TP9. The waveform should appear as shown in Figure 8-F-1 for the given conditions.
2. Measure the voltage at the junction of R41 and R39. The voltage should be -8V.
3. Check the outputs of U4 and U5 for the presence of the bias and API signals. These signals should be toggling while the 3325A is sweeping. If the signals are not present, check the operation of the Fractional N chip (U19) and check for the latch clock coming from U22 pin 6.

e. If the above circuitry is good, then the fault probably lies in the integrator or the API 1/Bias sub-block.

API Troubleshooting.

Exercise care when troubleshooting the API/Bias circuitry. The signals are small currents that are difficult to detect. Note that if the VCO locks but there are large spurious signals present at the output, diodes A21CR3, CR4, CR8, and CR9 should be checked.

f. Connect cable W18 back to the sample/hold output at J18A if not already done so.

The following steps determine if the digital programming portion or the analog portion of the A21 board is at fault.

g. Enter a frequency on the 3325A front panel of 5 000 001Hz.

For this frequency, the fractional-N counter is trying to correct the phase detector error for the 1Hz offset. Hence, the programming pattern for API 1 will repeat at a 1.0s rate, API 2 will repeat at 0.1 second rate, API 3 at a 0.01s rate, API 4 at a 0.001s rate, and API 5 at a 0.0001s rate.

h. Using an oscilloscope, check for each programming pulse at the following outputs:

API 1	U5(9)
API 2	U4(15)
API 3	U4(12)
API 4	U4(10)
API 5	U4(7)

i. If these pulses are present, then the digital section is probably good, and the fault may lie in the analog current sources. If any of the pulses are not present, check the fractional-N chip (U19) for the proper signals.

Individual API Troubleshooting.

j. Connect a spectrum analyzer through a 1kΩ series resistor to A21TP11.

k. Select the sine function on the 3325A and set the frequency to 5 000 000Hz.

l. Set the spectrum analyzer as follows to measure the signal at TP11:

Start Frequency 0kHz
Bandwidth 30Hz
Frequency Span 1kHz/div
Sweep Time/Div 200s
Input Sensitivity 10mV
Sweep Mode ..... Manual
Vertical Scale 10dB/div

The analyzer should measure a level of < -70dB. If the signal at TP11 is < -70dB, the API current sources in their OFF mode are not interfering with the phase detector output and the digital portion of the board is probably good. If the signal is not < -70dB, either the API current sources may not have turned off sufficiently or the phase detector input and output signals may be bad.

m. Set the 3325A frequency to 5 001 000Hz.

n. The spectrum analyzer should read < -70dB at TP11. If this signal is incorrect, troubleshoot the API 1 sub-block and the U19 programming signals. If the signal is good, the problem is probably not in the API 1 sub-block. Proceed to step o.

o. Set the 3325A frequency to 5 000 100Hz.

p. The spectrum analyzer should read < -70dB. This frequency tests the API 2 circuit. If the signal is incorrect, troubleshoot the API 2 sub-block and the U19 programming signals. If the signal is good, proceed to step q.

q. Set the 3325A frequency to 5 000 010Hz.

r. The spectrum analyzer should read < -70dB. This frequency tests the API 3 circuit. If the signal is incorrect, troubleshoot the API 3 sub-block and the U19 programming signals. If the signal is good, proceed to step s.

s. Set the 3325A frequency to 5 000 001Hz.

t. The spectrum analyzer should read < -70dB at TP11. This frequency tests the API 4 circuit. If the signal is incorrect, troubleshoot the API 4 sub-block and the U19 programming signals. If the signal is good, proceed to step u.

u. Set the 3325A frequency to 5 000 000.1Hz.

v. The spectrum analyzer should read < -70dB. This frequency tests the API 5 circuitry. If the level is incorrect, troubleshoot the API 5 sub-block and the U19 programming signals.

Phase Modulation Troubleshooting

If the output does not respond properly to a phase modulation input, measure dc voltages within the Phase Modulation circuit (A1Q37 and Q38) with:

Phase Modulation ..... Off
Phase Modulation Input ..... Open

Phase Modulation linearity problems can often be traced to A21CR18 and A21CR19.

TP	HP3325 Set Up	Measurement Set Up	Important Parameters	Waveform
9	Freq 1.1 MHz Function Sine Amplitude 10Vp-p	Oscilloscope Ch1 Coupling dc Ch1 Volts/Div 1V/div Time Div. 3.00μsec Trigger Ch1	Pulse Height and Width	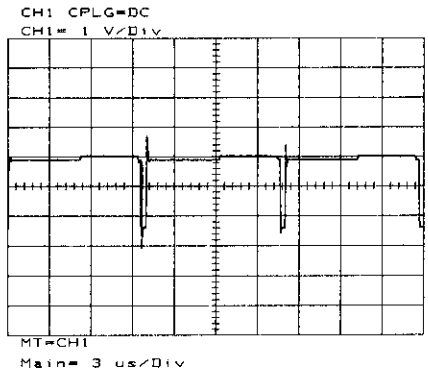
9	Freq 19.9MHz Function Sine Amplitude 10Vp-p	Oscilloscope Ch1 Coupling dc Ch1 Volts/Div 1V/div Time Div. 3.00μsec Trigger Ch1	Pulse Height and Width	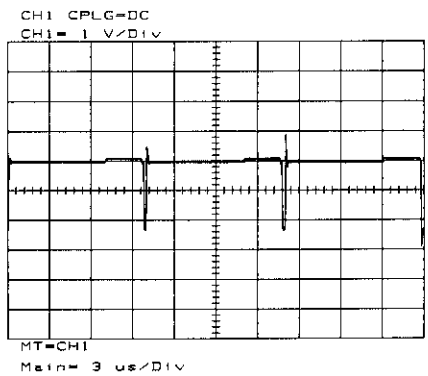
10	Freq 1.1 MHz Funcion Sine Amplitude 10Vp-p	Oscilloscope Ch1 Coupling dc Ch1 Volts/div 3.0V Time Div 3.0μsec Trigger Ch1	Pulse Height and Width	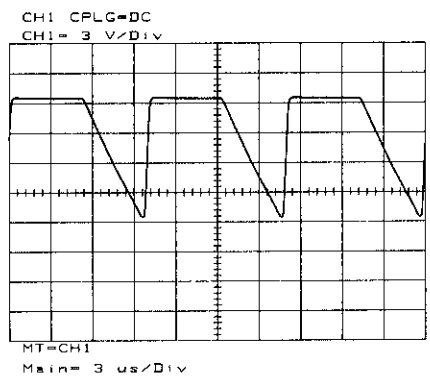
10	Freq 19.9MHz Function Sine Amplitude 10Vp-p	Oscilloscope Ch1 Coupling dc Ch1 Volts/div 3.0V Time Div 3.0μsec Trigger Ch1	Pulse Height and Width	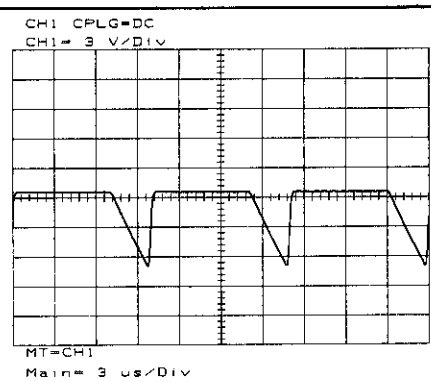

Figure 8-F-1. TP9 & TP10 Waveforms

Fig 8-39
Sht 1 of 5

Designator	Board Location
C1	A
C2	A
C3	B
C4	B
C6	A
C7	C
C8	A
C9	C
C10	A
C11	C
C12	C
C13	A
C14	C
C15	A
C16	A
C17	B
C18	B
C19	C
C21	D
C22	A
C23	A
C24	A
C26	A
C27	A
C28	A
C29	C
C31	C
C32	C
C131	E
C132	F
C133	E
C134	F
C135	D
C136	F
C137	E
C138	E
C139	F
C141	D
C142	F
C143	E
C144	E
C145	E
C161	F
C162	G
C163	G
C164	G
C166	G
C167	G
C168	G
C169	G
C171	G
C172	G
C173	G
C174	G
C176	G
C177	G
C178	G
C179	G
C181	G
C182	G
C196	D
C197	D
CR1	B
CR2	B
CR3	B
CR4	B
CR5	C
CR6	C
CR7	C
CR8	B
CR9	B
CR11	B
CR12	C
CR13	C
CR15	C
CR16	C
CR17	B
CR18	C
CR19	C
CR131	D
CR161	G
CR162	G
CR163	G
CR164	G
CR166	G
J1	D
J8	A
J15	G
J16	C
J17A	A
J17B	B
J18A	A
J18B	E
L1	C
L2	D
L3	D
L131	F
L132	E
L133	E
L161	G
L162	G
L163	G
Q1	B
Q2	B
Q3	B
Q4	B
Q6	C
Q7	C
Q8	C
Q9	A
Q10	A
Q11	A
Q12	A
Q13	A
Q14	B
Q16	B
Q17	B
Q18	B
Q19	B
Q21	B
Q22	B
Q23	C
Q24	C
Q25	A
Q26	C
Q27	A
Q28	B
Q29	B
Q31	B
Q32	B
Q33	C
Q37	C
Q38	C
Q39	A
Q41	B
Q42	B
Q43	B
Q44	C
Q131	E
Q132	D
Q161	F
Q162	G
Q163	G
Q164	G
R1	A
R2	A
R3	A
R4	A
R6	A
R7	A
R8	B
R9	B
R11	B
R12	B
R13	B
R14	C
R16	C
R17	C
R18	C
R19	C
R21	C
R22	C
R23	C
R24	C
R26	A
R27	A
R28	A
R29	A
R31	A
R32	A
R33	B
R34	B
R36	C
R37	C
R38	C
R39	C
R41	C
R42	C
R43	C
R44	C
R46	A
R47	A
R48	A
R49	A
R51	A
R52	A
R53	C
R54	C
R56	C
R57	A
R58	A
R59	A
R61	A
R62	A
R63	A
R64	A
R65	A
R66	A
R67	A
R68	B
R69	B
R70	A
R71	B
R72	B
R73	B
R74	C
R75	B
R76	C
R77	C
R78	C
R79	C
R81	C
R82	C
R83	C
R84	C
R86	C
R87	C
R88	C
R89	A
R91	B
R92	B
R93	B
R94	B
R96	B
R97	C
R98	C
R99	B
R101	C
R102	C
R103	C
R104	A
R106	A
R107	A
R108	A
R109	B
R111	B
R112	B
R113	B
R114	B
R116	B
R117	B
R118	C
R119	C
R121	C
R122	C
R123	C
R124	C
R126	C
R132	E
R133	E
R134	F
R135	D
R136	F
R137	F
R138	D
R140	D
R141	D
R142	E
R143	E
R144	D
R145	D
R146	E
R147	E
R148	E
R149	F
R151	F
R152	F
R161	F
R162	G
R163	F
R164	F
R165	F
R166	F
R167	F
R168	F
R169	F
R170	G
R171	F
R172	F
R173	F
R174	G
R176	G
R177	G
R178	G
R179	G
R181	G
R182	G
R183	G
R184	G
R186	G
R187	G
R188	G
R189	G
R191	G
R192	G
R193	G
R194	G
R196	G
R197	G
R198	G
R199	G
R200	G
R201	G
TP1	E
TP2	D
TP3	D
TP5	E
TP6	F
TP7	D
TP8	E
TP9	B
TP10	A
TP11	A
U1	A
U2	C
U3	B
U4	C
U5	D
U6	A
U7	E
U8	F
U9	D
U10	C
U11	E
U12	F
U13	F
U14	D
U15	E
U17	F
U18	F
U19	D
U21	E
U22	F
U23	F
U24	E
U26	F
U27	F
U28	D
U29	E
U30	F
U31	F
U32	F
U33	F
U34	G
W1	A
W2	B
W3	F

A21 Component Locations

Fig 8-39
Sht 2 of 5

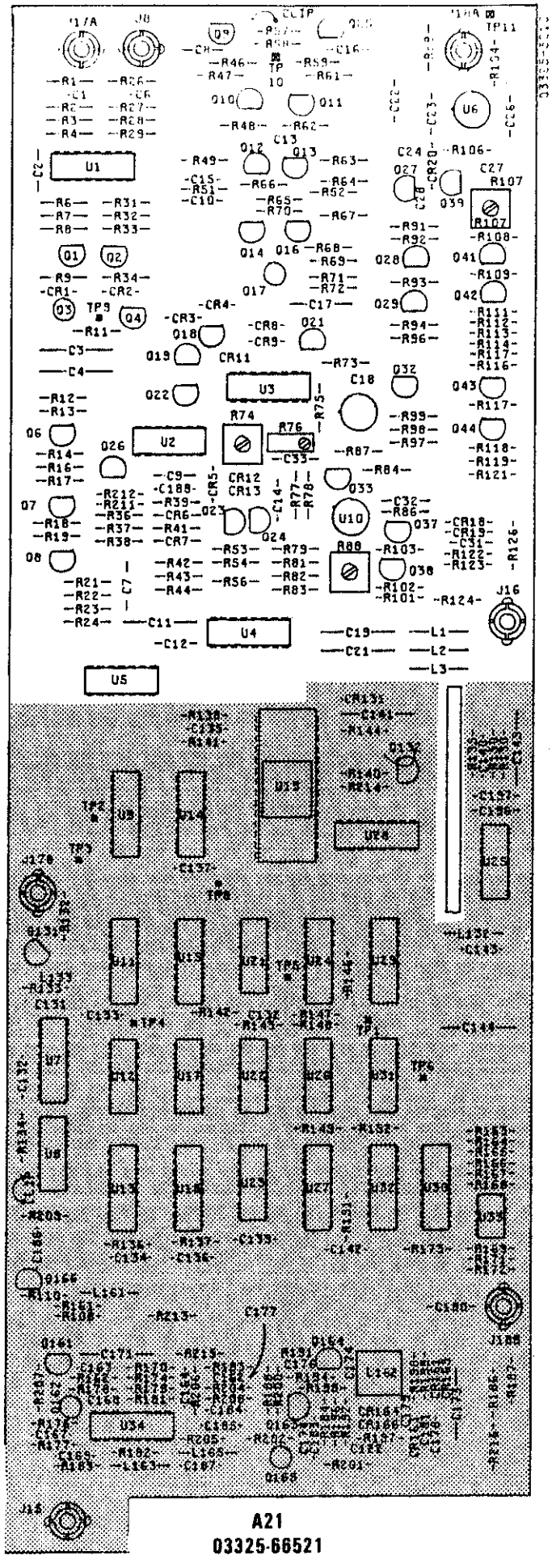

A21
03325-66521

Fig 8-39
Sht 3 of
5

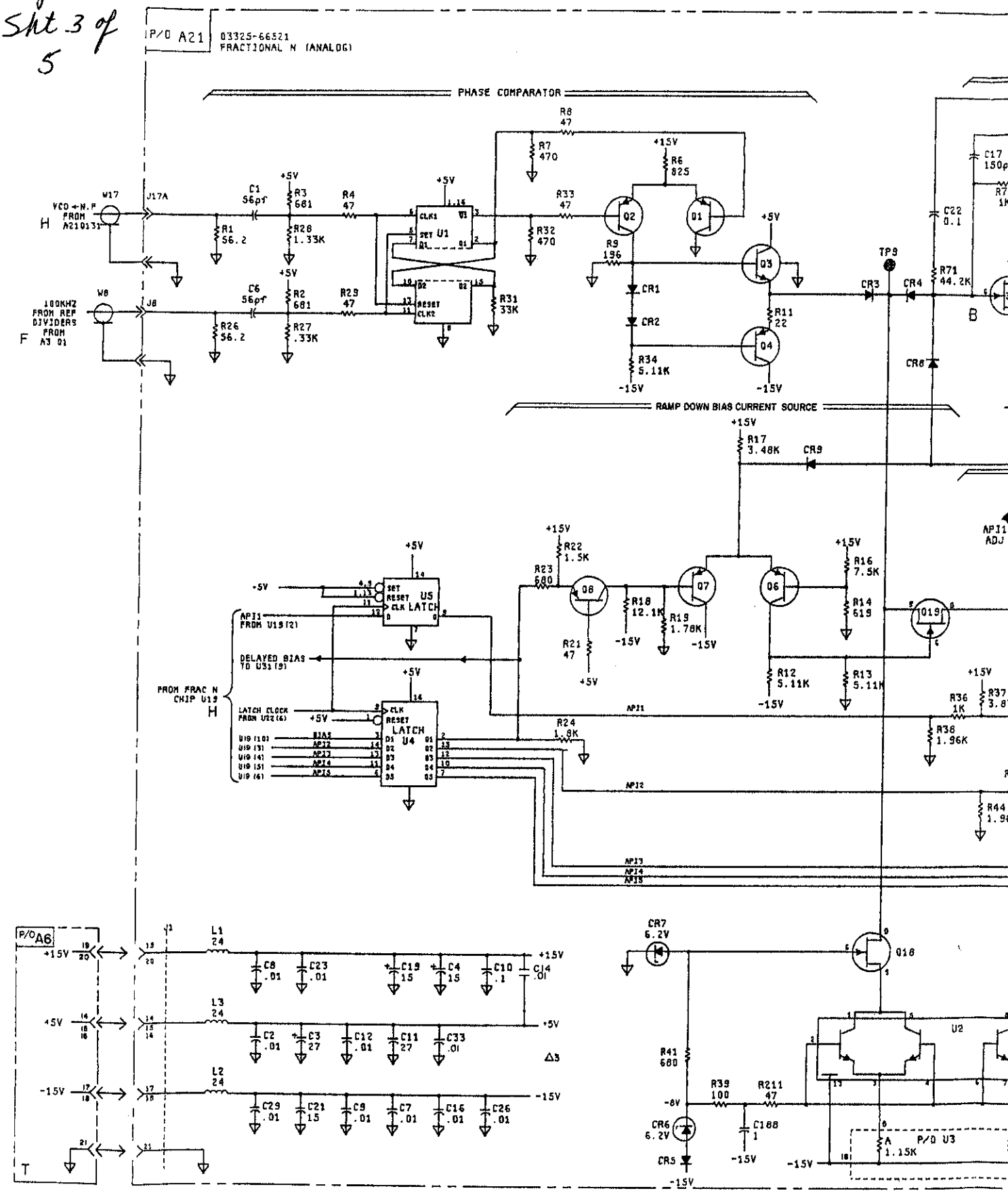

Fig 8-39
Sht 4 of 5

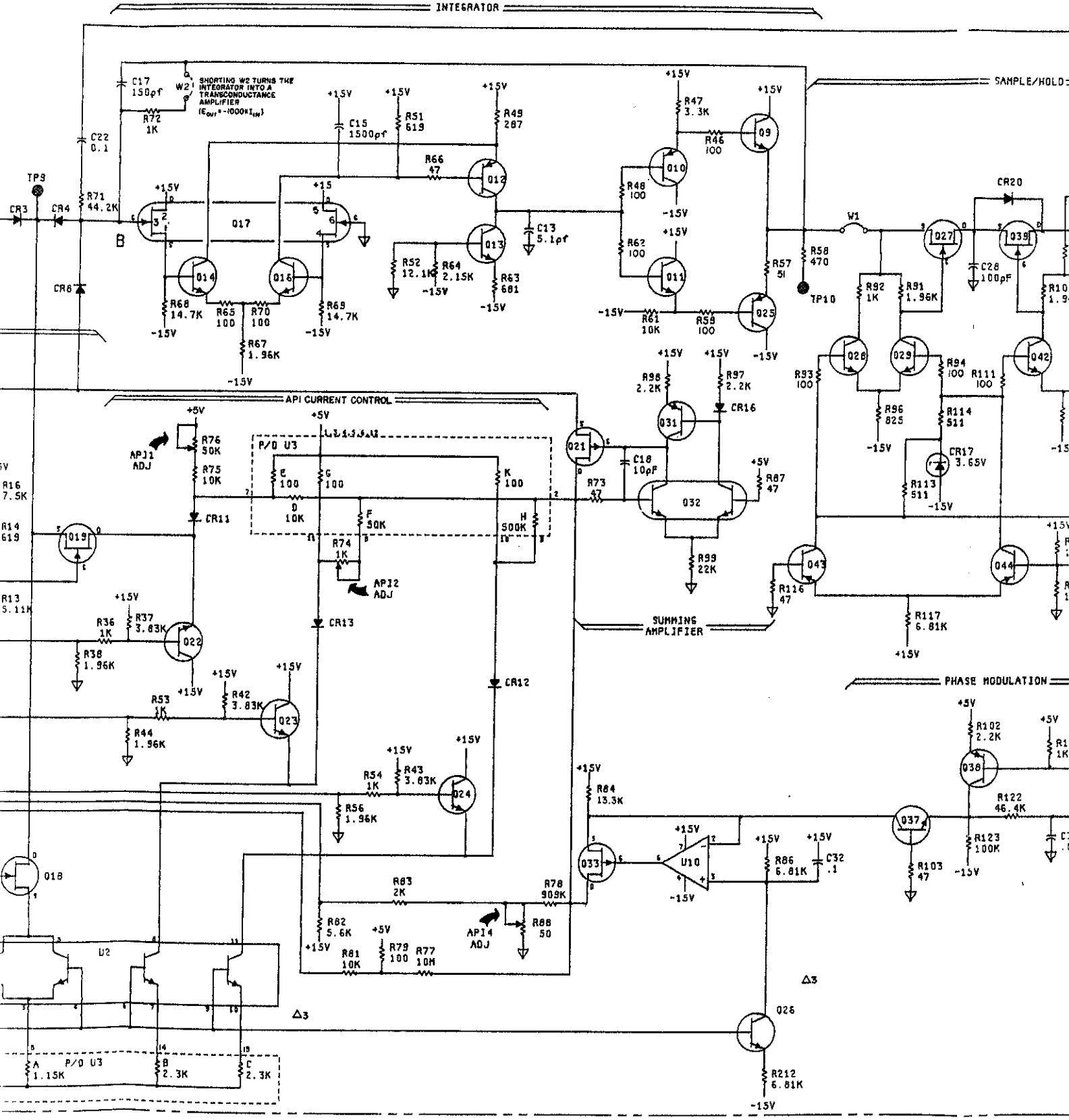

Fig 8-39
Sht 5 of 5

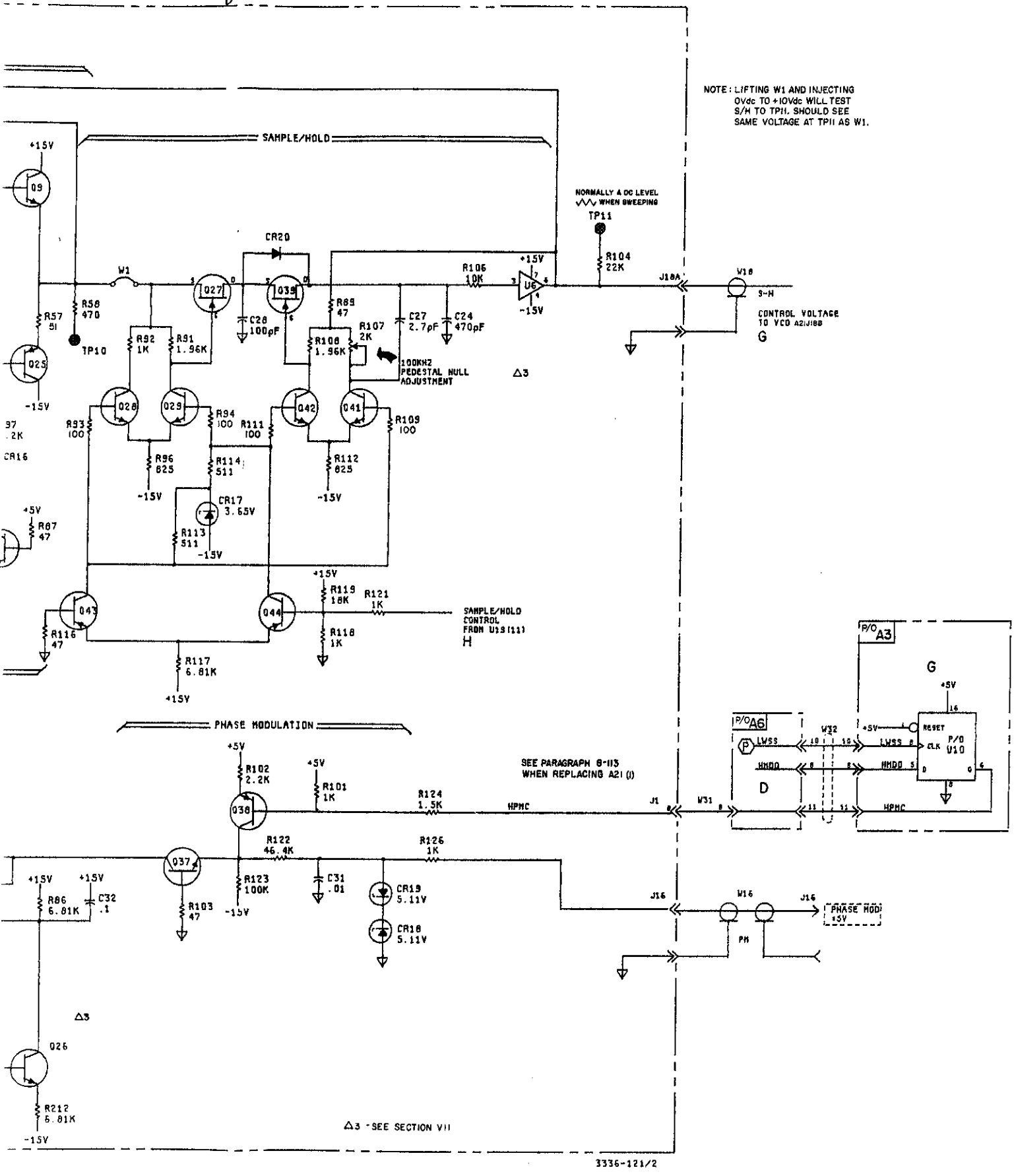

Figure 8-39. Fractional N Analog, A21.
8-F-5/8-F-6

SERVICE GROUP G - 30MHz REFERENCE AND DIVIDERS.

30MHz Reference Troubleshooting.

"OSC FAIL" Display Indication.

Step a of the "OSC FAIL" troubleshooting in Service Group D should be performed before proceeding with the following.

a. Check frequencies at the following points in order. If the signal is incorrect at any point, troubleshoot the associated circuits.

A3TP3	30 MHz
A3U2 pins 5 and 6	10 MHz
A3U1 pin 3	1 MHz
A3U1 pin 6	2 MHz
A3J10	1 MHz
A3U1 pin 13	100 kHz
A3U5 pin 8	100 kHz
A3Q1 collector	100 kHz (narrow pulse)

If the 30MHz Oscillator is failing it could be due to heavy loading by the multiplier (A3U11). This can be checked by lifting A3R73. Oscillator failures have also been linked to A3Q6, A3Y1, and A3CR8.

CAUTION

Do not allow disconnected cable connectors to contact the printed circuit boards or components, or circuits may be damaged.

Amplitude Troubleshooting.

b. The most common cause of problems in the Sine Amplitude Control and Amplitude Modulation circuitry is the multiplier (A3U11). Problems with U11 are usually detected by incorrect voltages at A3TP4. The voltage at TP4 should be pure dc and on a working instrument (or a malfunctioning one with Auto Calibration Disabled* - ACD) will be the following levels:

* See Figure 8-44 (Service Group K) for ACD test point location.

Programmed Amplitude	TP4
3Vp-p	2Vdc
10Vp-p	6Vdc

Using the modify key to increase the programmed voltage by one volt at a time should cause the voltage at TP4 to increase linearily as well. Pulling cable W23 at either end should cause TP4 to reach approximately 6-8V.

c. If the voltage at TP4 is correct but the output amplitude is still incorrect, check the ac voltages on U14 pins 6 and 7. With 10Vp-p programmed, both voltage levels should be approximately 0.6Vp-p. If not and with W23 disconnected at A3J23, measure the voltage at the following points:

A3TP4 6-8Vdc

A3U11(9) 4.8Vdc

Note also that U14 is probably bad if the frequency difference between pins 6 and 7 is greater than 20% (the frequency should be approximately 30MHz on both pins).

d. If after A3U11 and/or A3U14 have been replaced and incorrect voltages are measured at TP4, the amplitude problem may be isolated via Service Groups C, J, or I.

e. If the voltages at TP4 are correct and the output amplitude is incorrect, troubleshoot the problem via Service Groups H or J.

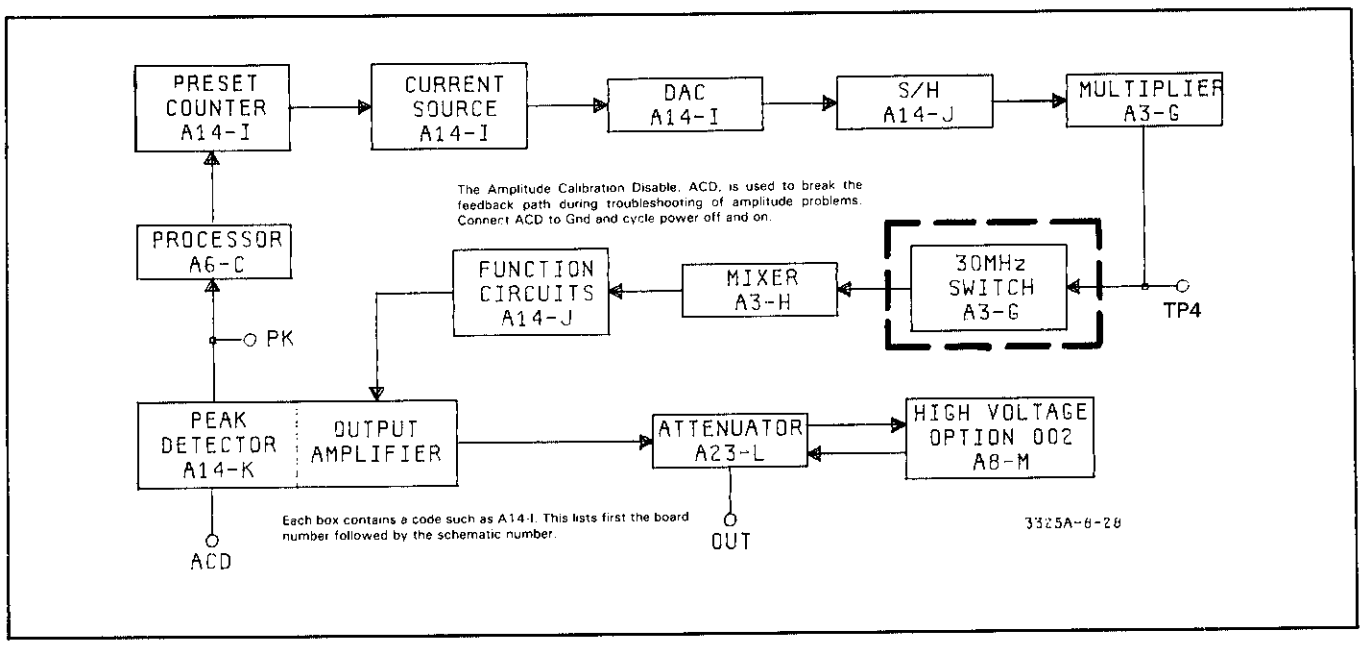

Figure 8-G-1. Sine Amplitude Control Path.

Fig. 8-40
Sht 1 of 5

Designator	Board Location
C1	A
C2	A
C3	A
C4	A
C6	A
C7	A
C8	A
C9	A
C11	A
C12	B
C13	B
C14	B
C16	B
C17	B
C18	B
C19	B
C21	B
C22	B
C23	B
C24	C
C26	C
C27	C
C28	B
C29	B
C31	B
C32	C
C33	C
C34	B
C36	C
C37	C
C38	C
C39	C
C41	C
C42	C
C43	C
C44	C
C46	C
C47	C
C48	C
C49	D
C51	D
C52	D
C53	D
C54	D
C56	D
C57	D
C58	D
C59	E
C61	E
C101	E
C102	E
C103	E
C104	E
C106	E
C107	E
C108	E
C109	E
C111	E
C112	E
C113	E
C114	E
C116	F
C117	F
C118	F
C119	F
C121	F
C122	F
C123	F
C124	F
C126	F
C127	F
C128	F
C129	F
C151	G
C152	G
C153	G
C154	G
C156	G
C157	G
C158	G
CR1	A
CR2	A
CR3	A
CR4	A
CR6	A
CR7	B
CR8	C
CR101	F
J1	C
J2	D
J3	G
J7	D
J8	B
J9	A
J10	A
J11	A
J15	G
J23	C
J24	D
L1	A
L2	B
L3	B
L4	C
L5	B
L6	B
L7	B
L8	C
L9	C
L101	E
L102	E
L103	E
L104	E
L105	E
L106	E
L107	F
L108	F
L109	F
L111	F
L112	F
L113	F
L114	F
L116	F
L117	F
L151	G
L152	G
L153	G
P2	D
Q1	A
Q2	B
Q3	B
Q4	C
Q6	E
Q101	E
Q102	E
R1	A
R2	B
R3	A
R6	A
R7	A
R8	A
R9	A
R10	A
R11	A
R12	A
R13	A
R14	A
R16	A
R17	B
R18	B
R19	B
R21	B
R22	B
R23	B
R24	B
R26	B
R27	B
R28	B
R29	B
R30	B
R32	B
R33	C
R34	C
R36	C
R37	C
R38	C
R39	C
R41	C
R42	C
R43	C
R44	C
R45	C
R46	C
R47	C
R48	C
R49	C
R56	D
R57	D
R58	D
R59	D
R61	D
R62	D
R63	D
R64	D
R66	D
R67	D
R68	D
R69	D
R70	C
R71	D
R72	C
R73	D
R74	D
R76	D
R77	D
R78	D
R79	D
R81	D
R82	D
R83	D
R84	D
R86	D
R87	D
R88	D
R89	D
R91	D
R92	D
R93	D
R101	E
R102	E
R103	E
R104	E
R106	E
R107	E
R108	E
R109	E
R111	E
R112	E
R113	F
R114	F
R115	F
R116	F
R117	F
R118	F
R119	F
R121	F
R122	F
R123	F
R151	G
R153	G
R154	G
R156	G
R157	G
R158	G
R159	G
T1	F
T2	F
TP1	B
TP2	C
TP3	C
TP4	D
TP6	E
TP7	E
U1	A
U2	A
U3	A
U4	A
U5	B
U6	B
U7	B
U8	B
U9	C
U10	D
U11	D
U12	D
U13	D
U14	D
U15	E
U16	F
U17	G
U18	G
U19	G
Y1	C
Norm/Test	D

A3 Component Locations

Fig 8-40
Sht 2 of 5

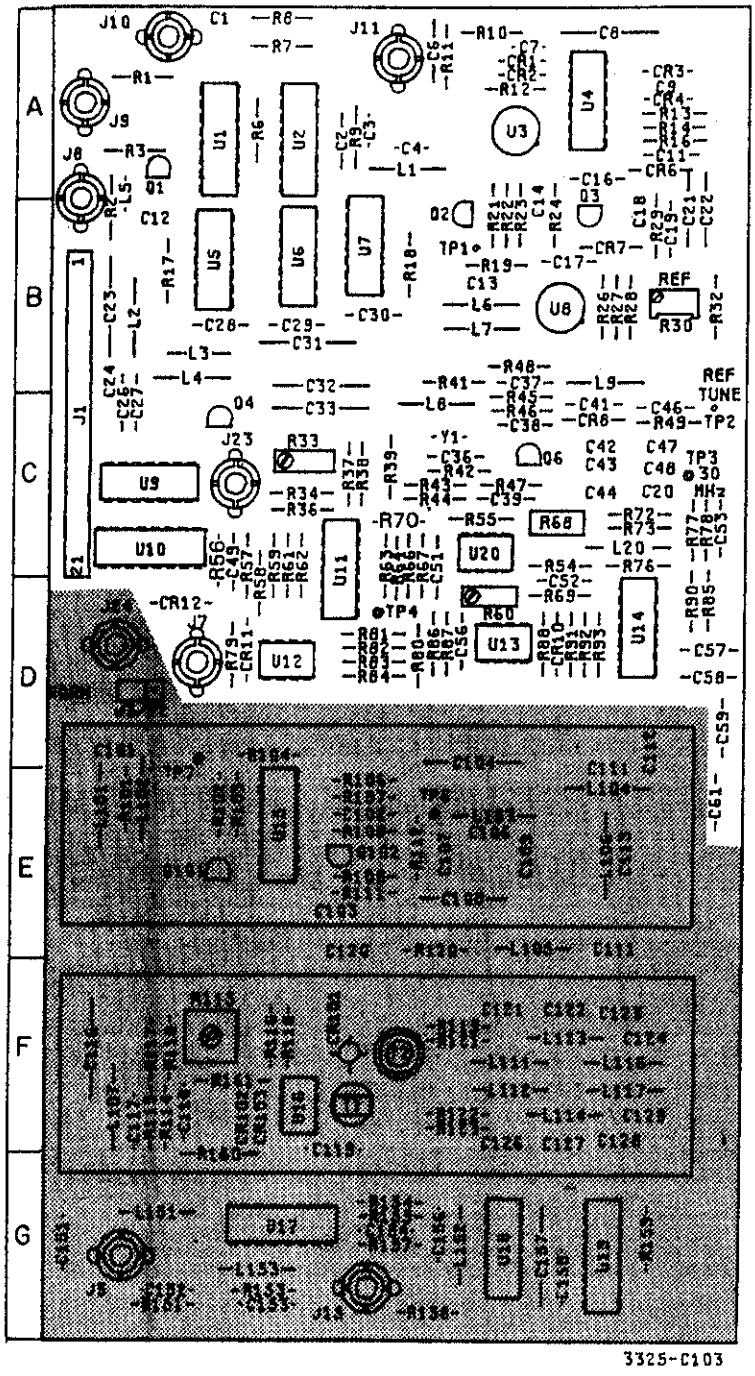

A3
03325-66503
Rev C

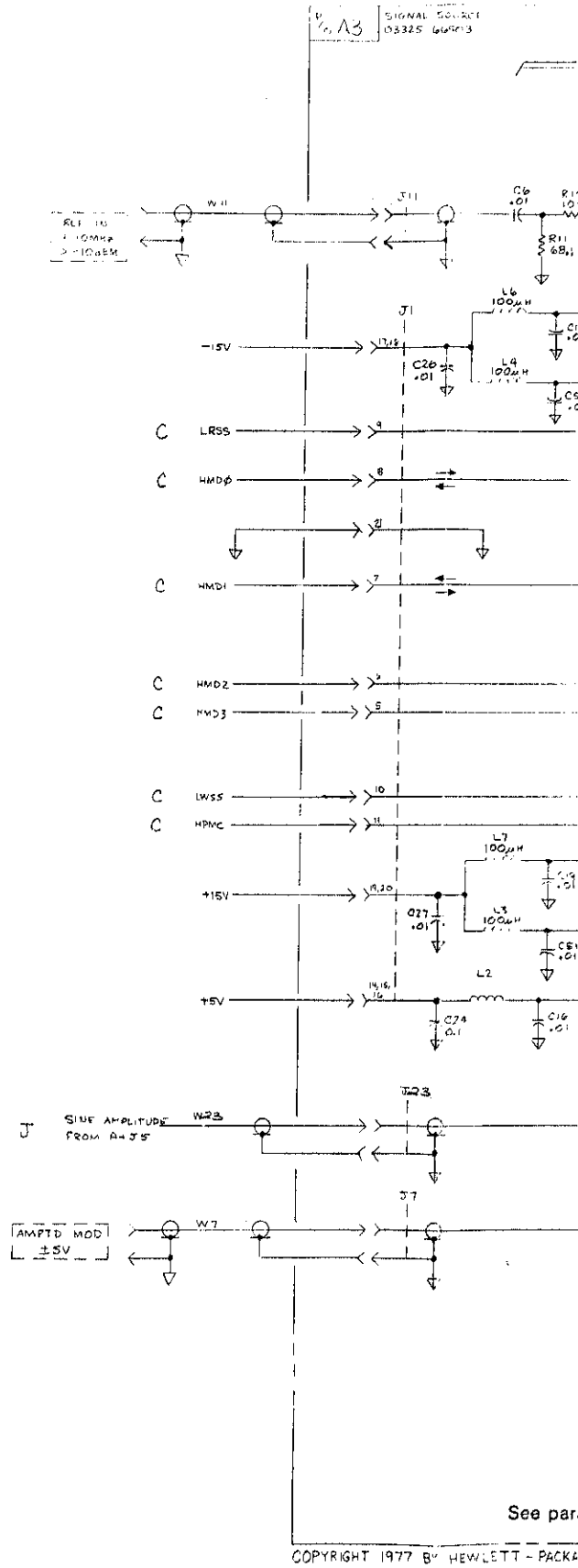

Fig 8-40
Sht 3 of 5

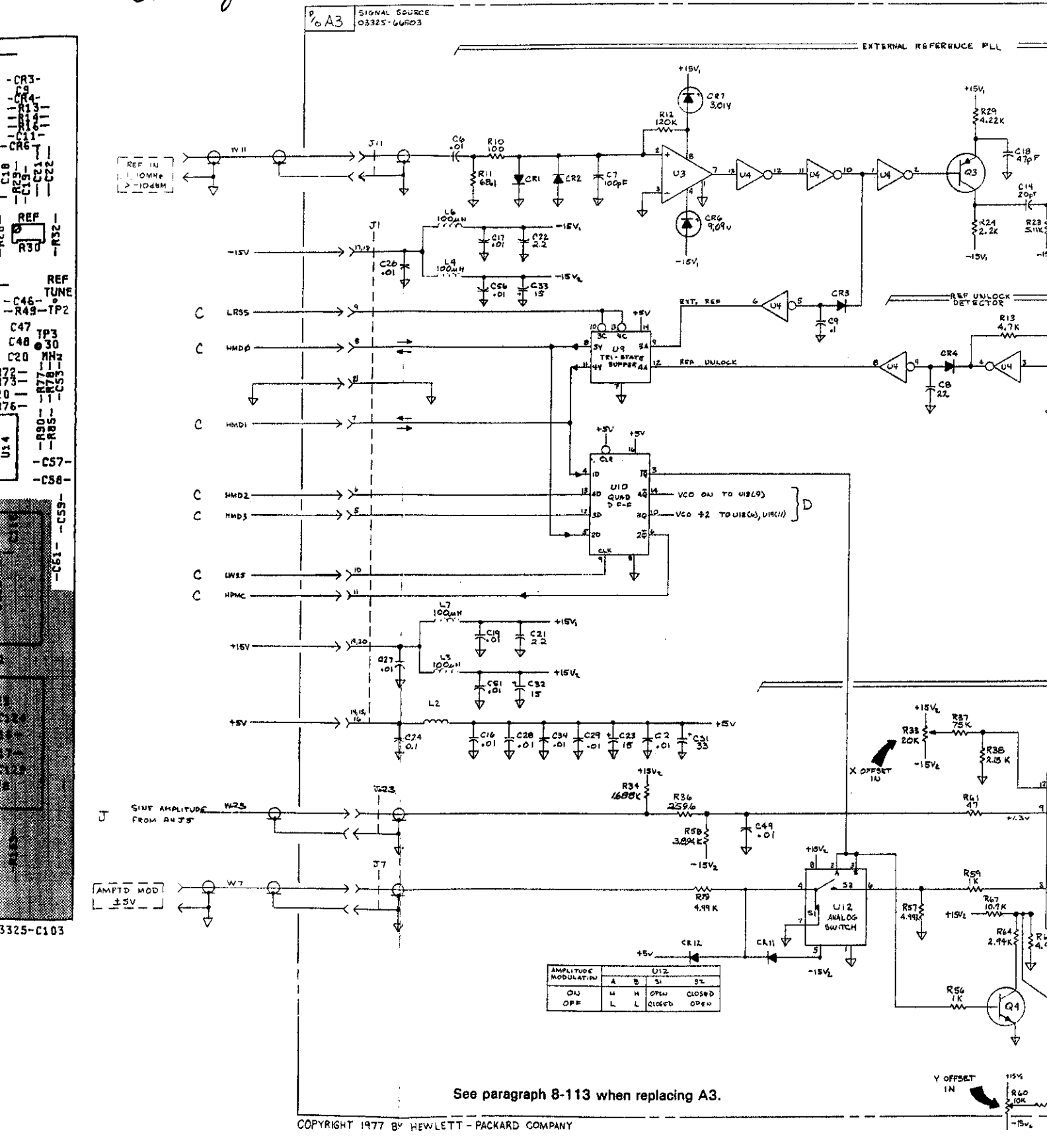

COPYRIGHT 1977 BY HEWLETT-PACKARD COMPANY

Fig 8-40
Sht 4 of 5

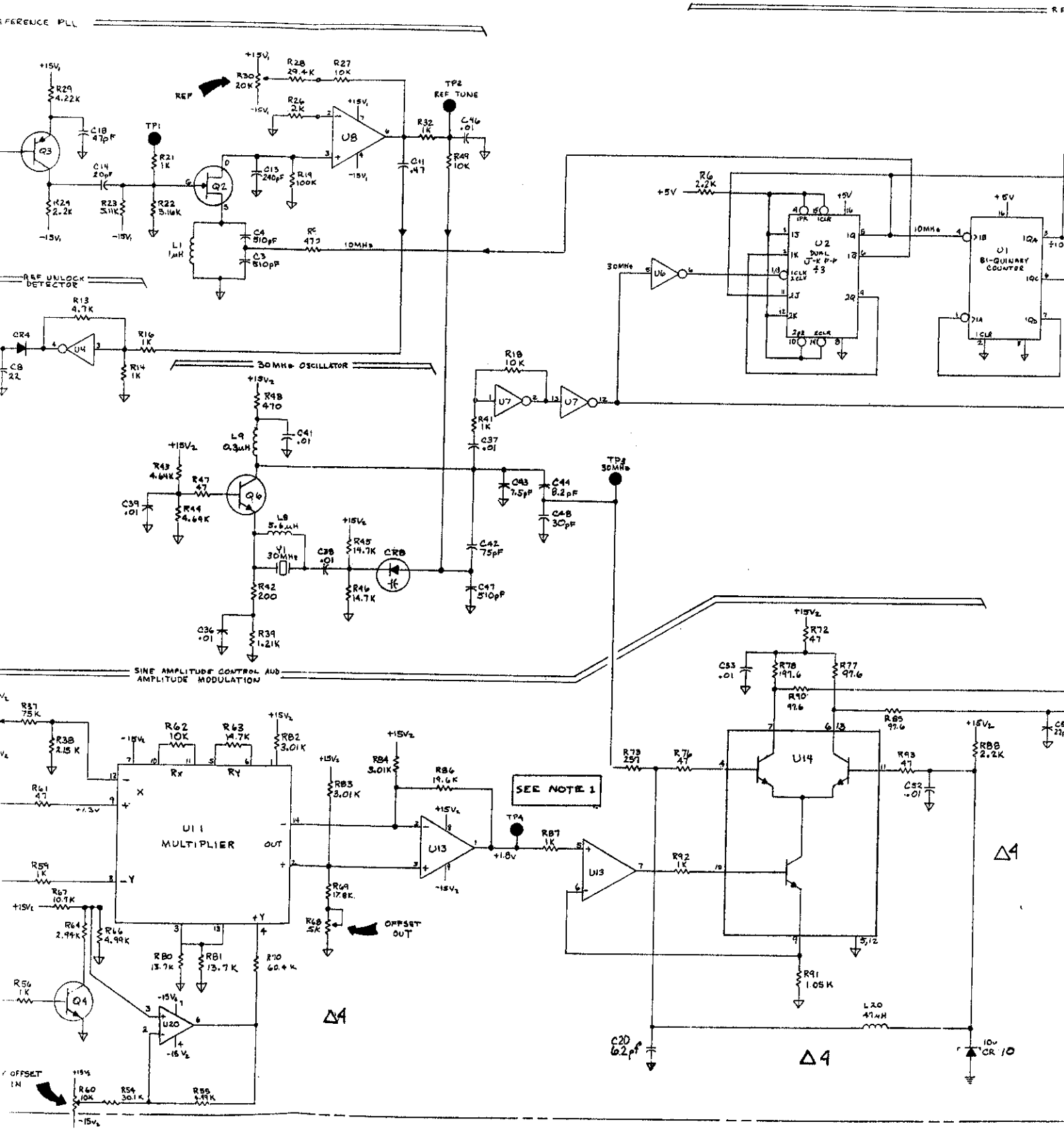

Fig 8-40
Sht 5 of 5

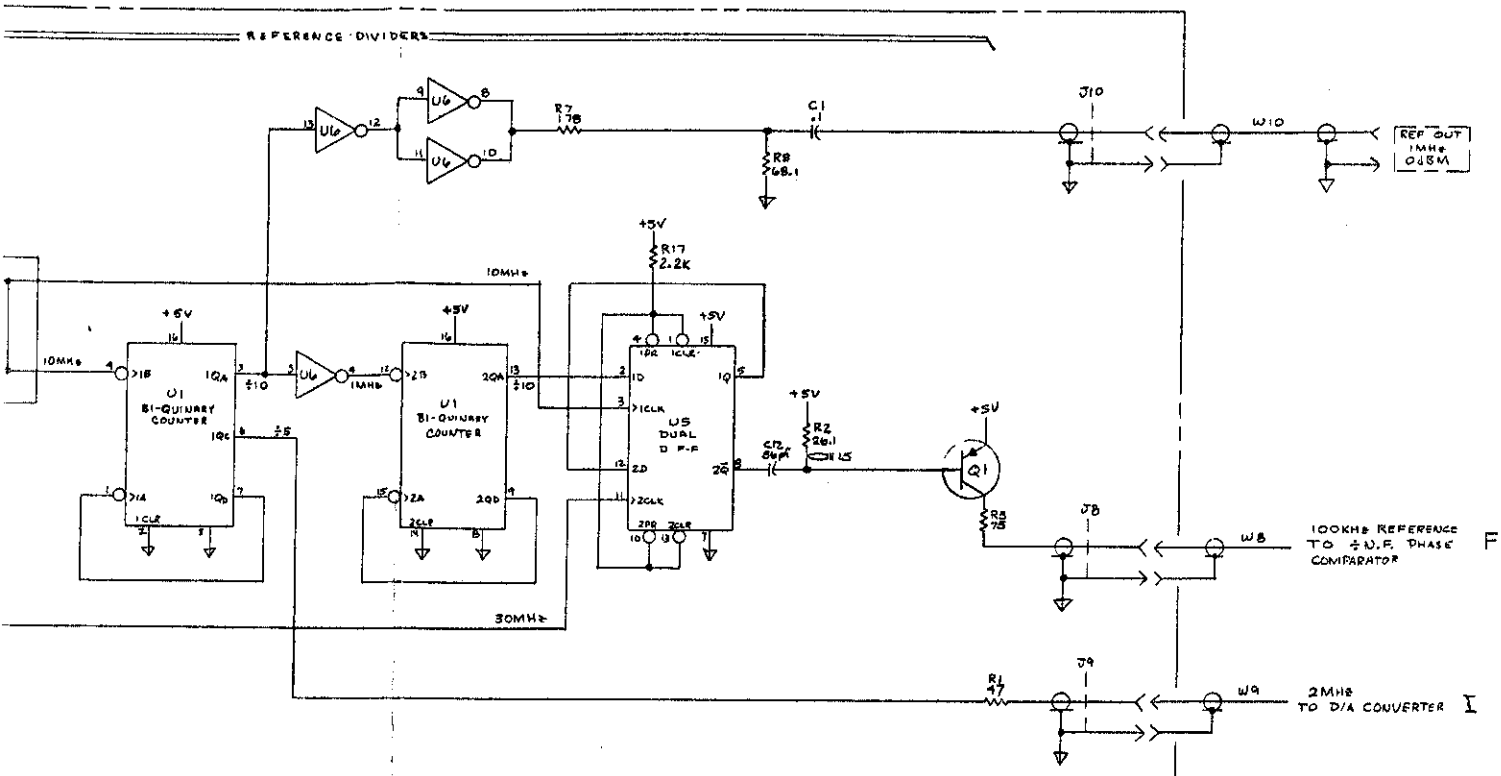

Note 1:

These voltage levels are useful when troubleshooting amplitude problems (frequency 1kHz, TP ACD grounded, voltages p-p).

Programmed Amplitude	TP4 0Vdc Offset	TP4 2Vdc Offset
1Vp-p	1.92	0.616
2Vp-p	3.88	1.27
3Vp-p	1.92	1.92
4Vp-p	2.57	2.57
5Vp-p	3.23	3.23
6Vp-p	3.88	3.88
7Vp-p	4.53	—
8Vp-p	5.18	—
9Vp-p	5.84	—
10Vp-p	6.45	—

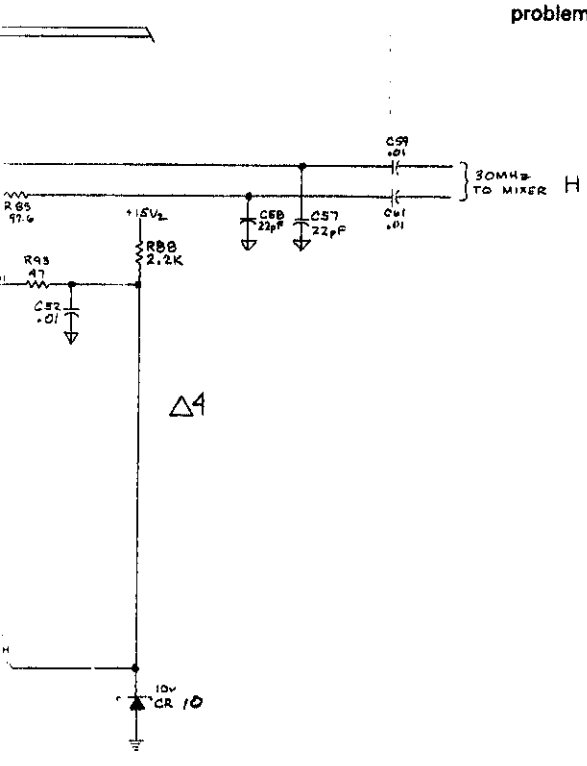

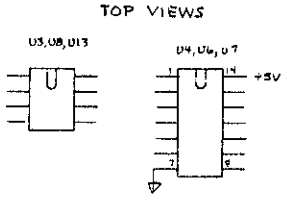

Δ4 - see Section VII

33.25A - 3A-1

Figure 8-40. 30 MHz Reference and Dividers, A3.

SERVICE GROUP H - MIXER.

Mixer Shields.

The Mixer circuits are covered by two shields, each consisting of a flat cover and an extrusion. Always set the POWER switch to STBY before removing or replacing the shields. When replacing a shield, make sure the key on the bottom edge of the shield is aligned with the hole in the printed circuit board. Also, make sure the hole in the cover nearest the front of the instrument is over the mixer adjustment resistor.

Mixer Troubleshooting.

Failures on this portion of the A3 board are usually linked to A3CR101, A3U16, and sometimes A3U15. A3U16 often fails because of metalization.

a. Ground the Auto Calibration Disable (ACD) test point (Service Group K - Figure 8-44) and cycle power. When 10Vp-p is programmed, the voltage at A3TP6 should be 100mVp-p with no dc. If this voltage is not correct, make sure that ACD is disabled and check TP6 again. If the voltage is still incorrect, the fault lies prior to TP6.

b. To check for a A3CR101 failure, turn the instrument off and measure the resistance from TP6 to ground. An ohmmeter with $\leq$ 1mA of current (3455A for example) is needed. The resistance should range from 198Ω to 202Ω. If the resistance measures less than 198Ω, one of the diodes in CR101 is leaky. CR101 can also be responsible for poor harmonic distortion and spurs.

c. When replacing CR101, a good technique is to use four round toothpicks to position each of the four leads into place. This enables the new CR101 to be checked for satisfactory operation before it is soldered in place. Since the orientation of CR101 often affects harmonics and spurs, rotating it 90, 180, or 270 degrees can often improve these specifications. Use care when replacing CR101. Because of its small size, it is often damaged when being soldered.

d. The waveform on the secondary windings of T1 (side closest to CR101 on schematic) can be observed on an oscilloscope. At turn-on, this waveform should be a 2Vp-p, 30MHz sine wave on both leads. Note that the waveform on T2 is not as easily observed.

e. The voltage measured at A3TP7 should be the same as A3TP6 (step a). If this is the case, A3U15 is probably good.

f. The mixer output signal leaves the A3 board and enters the A14 board as a current via cable W24. A check of this current is made as follows:

1. Connect the ACD test point (Service Group K) to ground and cycle instrument power.

2. Move the Norm/Test jumper on A3 (Service Group H) to the test position.

3. Program the front panel for a sine function at 10Vp-p.

4. Remove cable W24 from connector J24 on A3 (Service Group H).

5. Place an oscilloscope probe on J24's center connector. The signal should be close to 2.00Vp-p with 2.2Vdc.

6. Program an instrument sweep from 1kHz to 20MHz while monitoring the signal at the center connector of J24. Note that the voltages should remain the same. If they do not, check the multiplier (U11) and the differential amplifier (U14) in Service Group G.

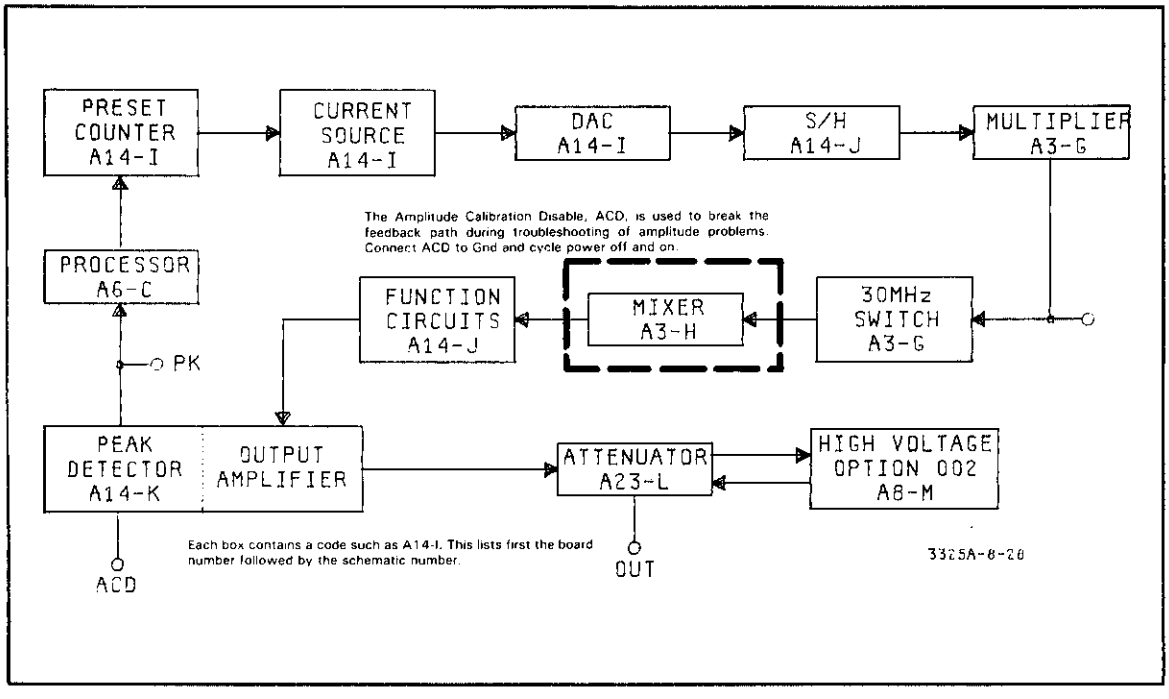

Figure 8-H-1. Sine Amplitude Control Path.

Fig 8-41
Sht 1 of 4

Designator	Board Location
C1	A
C2	A
C3	A
C4	A
C6	A
C7	A
C8	A
C9	A
C11	A
C12	B
C13	B
C14	B
C16	B
C17	B
C18	B
C19	B
C21	B
C22	B
C23	B
C24	C
C26	C
C27	C
C28	B
C29	B
C31	B
C32	C
C33	C
C34	B
C36	C
C37	C
C38	C
C39	C
C41	C
C42	C
C43	C
C44	C
C46	C
C47	C
C48	C
C49	D
C51	D
C52	D
C53	D
C54	D
C56	D
C57	D
C58	D
C59	E
C61	E
C101	E
C102	E
C103	E
C104	E
C106	E
C107	E
C108	E
C109	E

Designator	Board Location
C111	E
C112	E
C113	E
C114	E
C116	F
C117	F
C118	F
C119	F
C121	F
C122	F
C123	F
C124	F
C126	F
C127	F
C128	F
C129	F
C151	G
C152	G
C153	G
C154	G
C156	G
C157	G
C158	G
CR1	A
CR2	A
CR3	A
CR4	A
CR6	A
CR7	B
CR8	C
CR101	F
J1	C
J2	D
J3	G
J7	D
J8	B
J9	A
J10	A
J11	A
J15	G
J23	C
J24	D
L1	A
L2	B
L3	B
L4	C
L5	B
L6	B
L7	B
L8	C
L9	C
L101	E
L102	E
L103	E
L104	E
L105	E

Designator	Board Location
L106	E
L107	F
L108	F
L109	F
L111	F
L112	F
L113	F
L114	F
L116	F
L117	F
L151	G
L152	G
L153	G
P2	D
Q1	A
Q2	B
Q3	B
Q4	C
Q6	E
Q101	E
Q102	E
R1	A
R2	B
R3	A
R6	A
R7	A
R8	A
R9	A
R10	A
R11	A
R12	A
R13	A
R14	A
R16	A
R17	B
R18	B
R19	B
R21	B
R22	B
R23	B
R24	B
R26	B
R27	B
R28	B
R29	B
R30	B
R32	B
R33	C
R34	C
R36	C
R37	C
R38	C
R39	C

Designator	Board Location
R41	C
R42	C
R43	C
R44	C
R45	C
R46	C
R47	C
R48	C
R49	C
R56	D
R57	D
R58	D
R59	D
R61	D
R62	D
R63	D
R64	D
R66	D
R67	D
R68	D
R69	D
R70	C
R71	D
R72	C
R73	D
R74	D
R76	D
R77	D
R78	D
R79	D
R81	D
R82	D
R83	D
R84	D
R86	D
R87	D
R88	D
R89	D
R91	D
R92	D
R93	D
R101	E
R102	E
R103	E
R104	E
R106	E
R107	E
R108	E
R109	E
R111	E
R112	E
R113	F
R114	F
R115	F
R116	F
R117	F
R118	F
R119	F

Designator	Board Location
R121	F
R122	F
R123	F
R151	G
R153	G
R154	G
R156	G
R157	G
R158	G
R159	G
T1	F
T2	F
TP1	B
TP2	C
TP3	C
TP4	D
TP6	E
TP7	E
U1	A
U2	A
U3	A
U4	A
U5	B
U6	B
U7	B
U8	B
U9	C
U10	D
U11	D
U12	D
U13	D
U14	D
U15	E
U16	F
U17	G
U18	G
U19	G
Y1	C
Norm/Test	D

Fig 8-41
sht 2 of 4

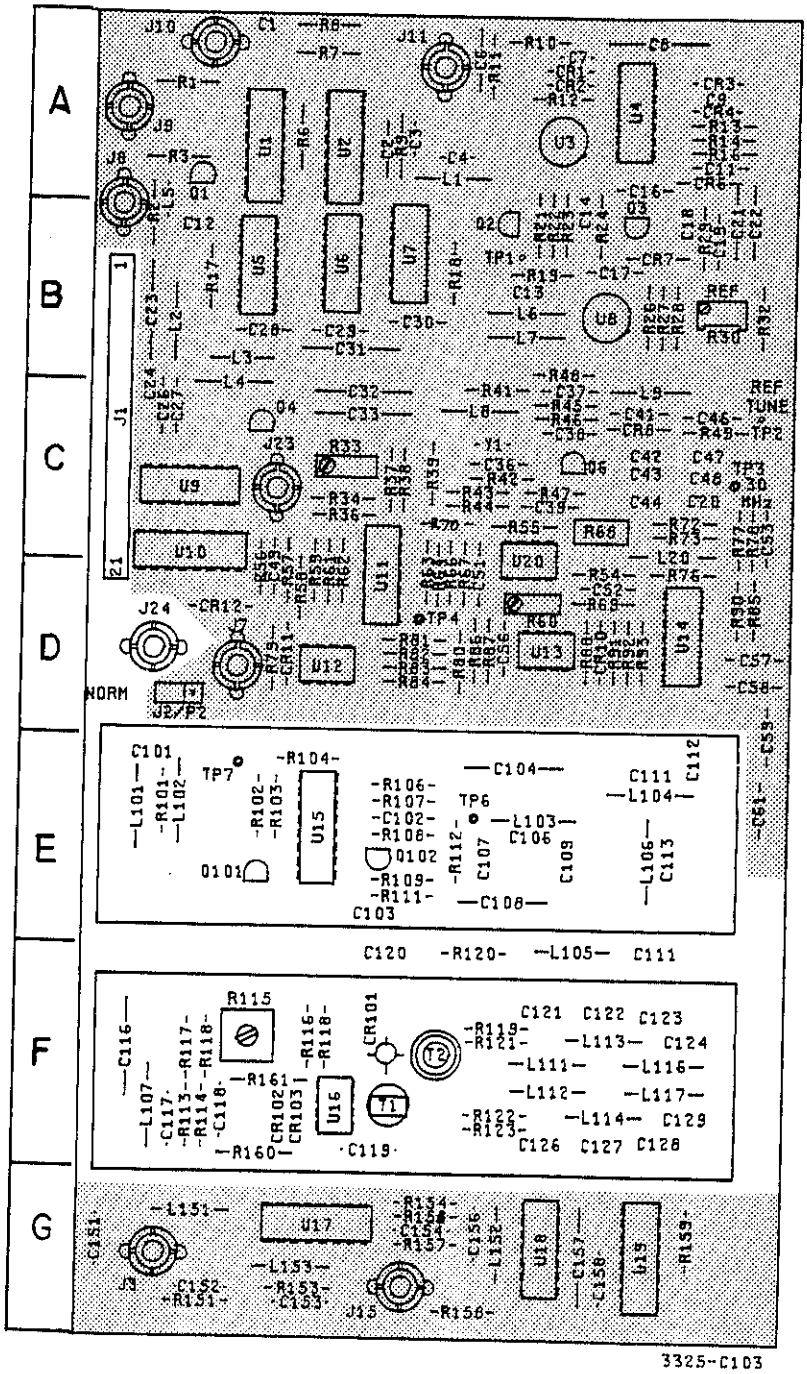

A3
03325-66503
Rev C

Fig 8-41
Sht 3 of 4

P/O A3 | SIGNAL SOURCE 03325-66503

MIXER

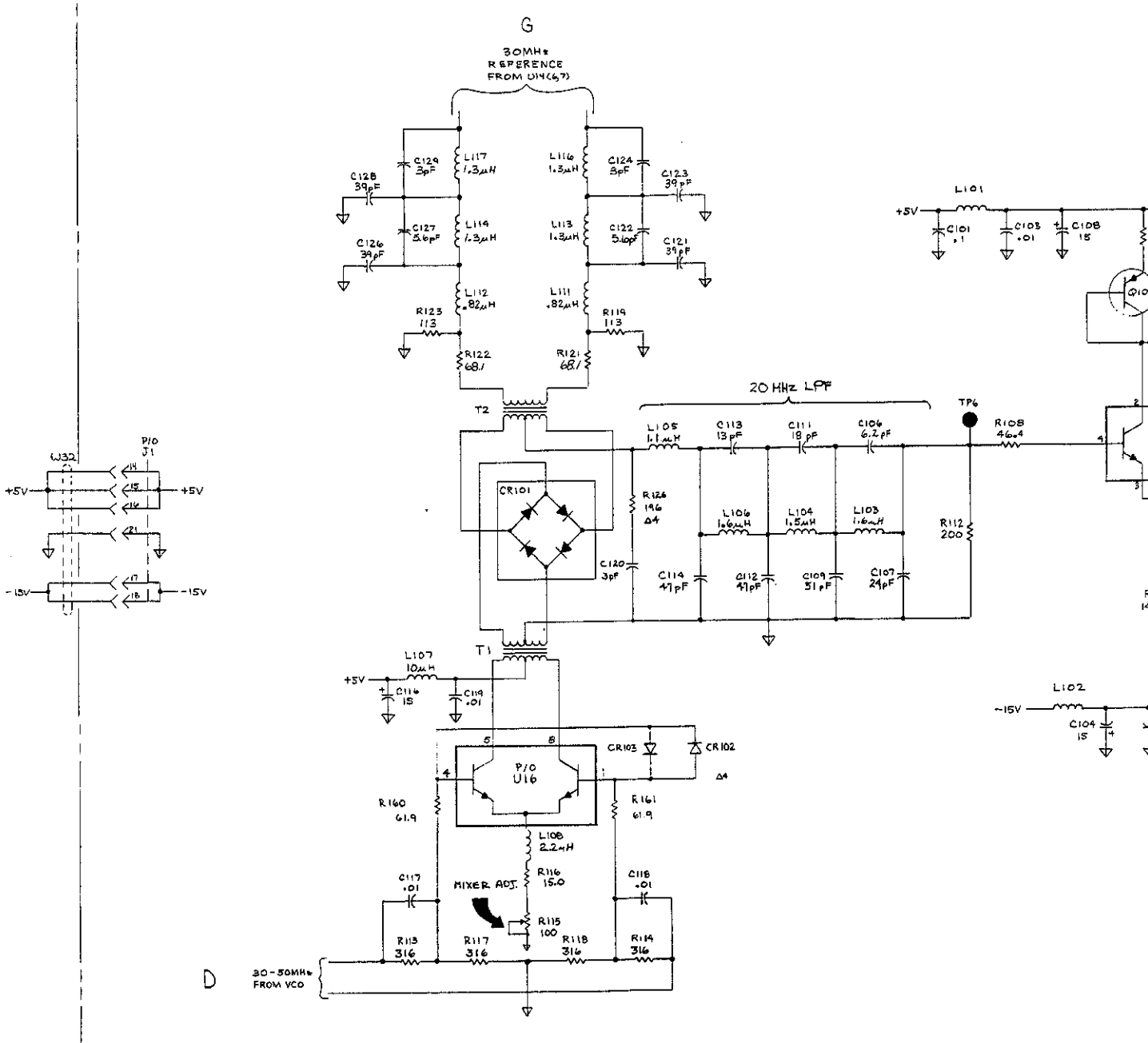

COPYRIGHT 1977 BY HEWLETT-PACKARD COMPANY

Fig 8-41
Sht 4 of 4

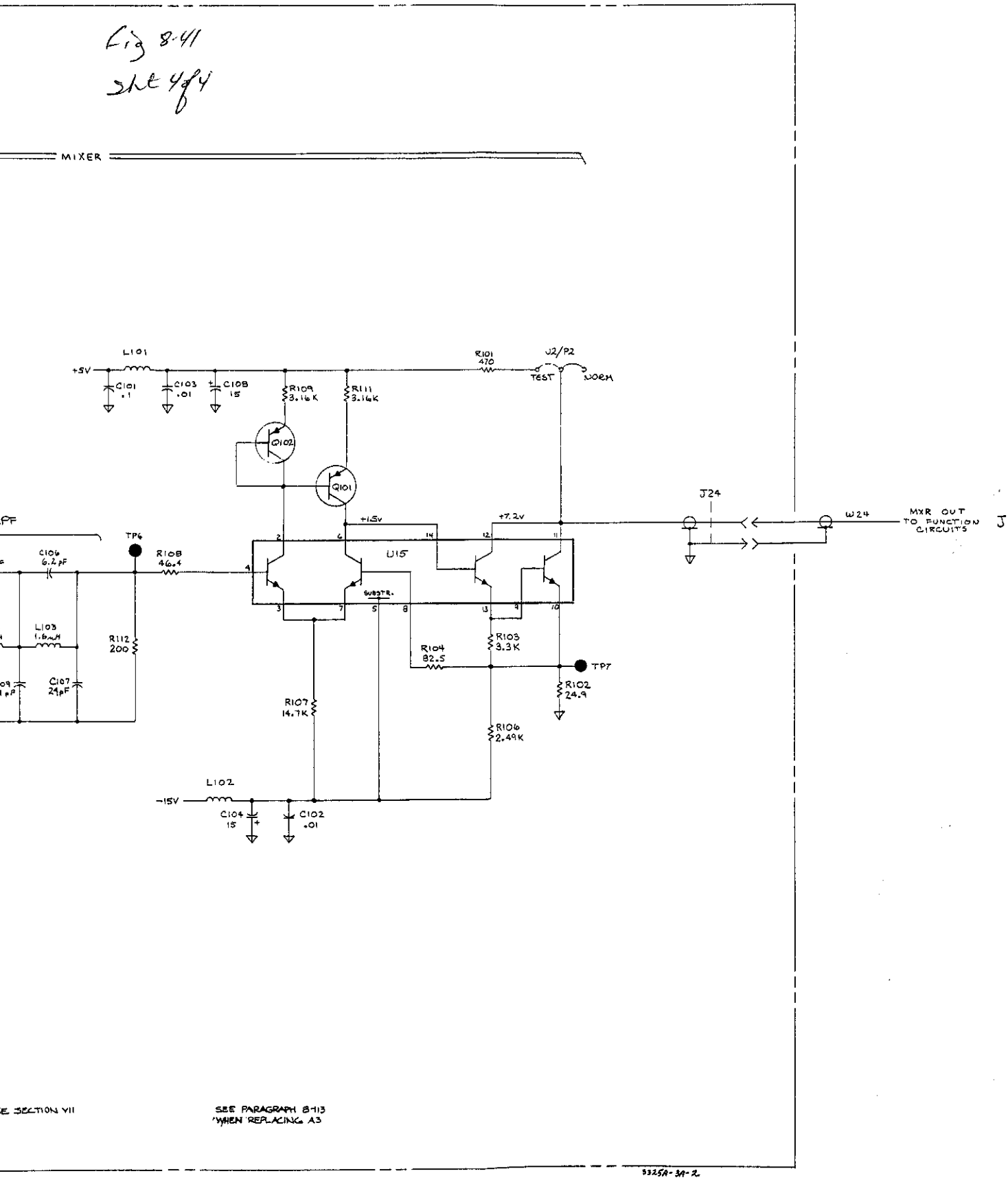

Figure 8-41. Mixer, A3.
8-H-3/8-H-4

SERVICE GROUP I - D/A CONVERTER AND SAMPLE HOLD.

D/A and Sample/Hold Troubleshooting.

These circuits convert digital information (from the controller) to the analog voltages which control output level, dc offset, etc. If these control voltages appear to be incorrect (Service Groups J, K, or N) the trouble may be in the DAC counters, current source, or integrator, or in the Sample/Hold switches or amplifiers.

Observe the "DAC Integrator Out" pulse train shown below. The voltage level at each Sample/Hold output amplifier test point should be identical to the level of its corresponding pulse at the DAC test point. This pulse train occurs at instrument turn-on and with the ACD test point grounded (schematic K - Service Group K). Note that the levels have a tolerance of ± 0.02Vdc. Verification of these levels is made by again grounding the ACD test point, externally triggering an oscilloscope on the positive slope of test point AZ, and connecting the scope's input to the DAC test point.

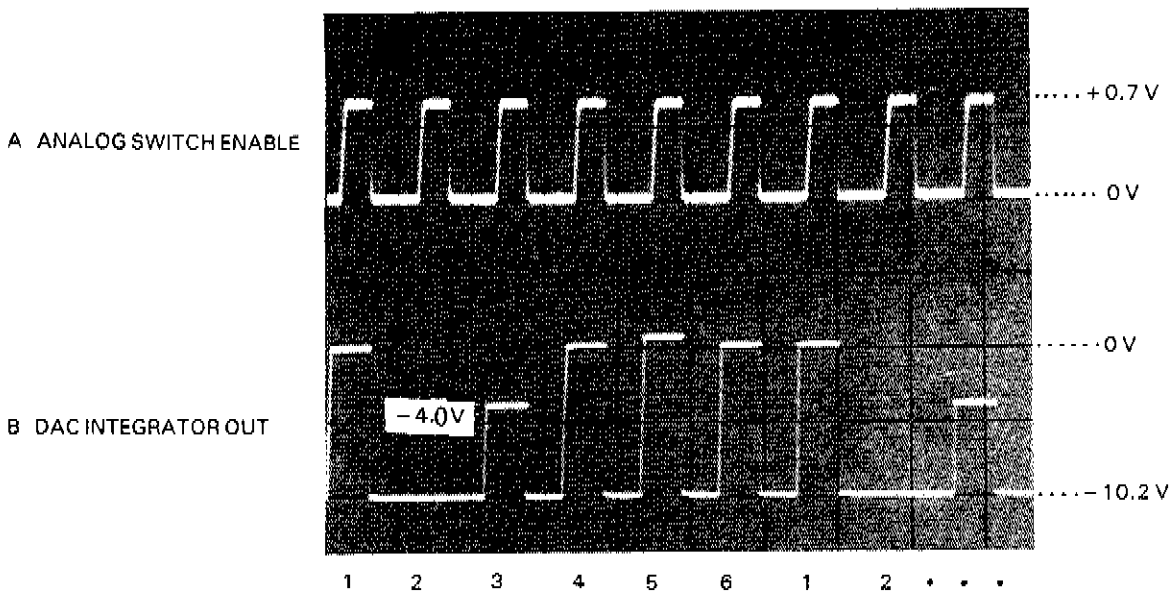

1	= DAC Auto Zero	(No TP) 0.0Vdc
2	= Amplitude Calibration Level	(TP +LVL) -10.2Vdc
3	= Output Amplitude	(TP AMPL) -4.0Vdc
4	= DC Offset	(TP OS2) 0.0Vdc
5	= DC Offset Correction	(TP OS1) 0.0Vdc
6	= X Drive	(TP XDR) 0.0Vdc

If the level at each Sample/Hold test point is not the same as its corresponding pulse at the DAC test point, suspect problems with the analog switch, the op amp, or the Sample/Hold capacitor. The following information can also help one determine if the Sample/Hold output is good.

The DAC Auto Zero pulse is approximately 0V and the voltage out of A14U17 will vary slightly around -4.2V.

+LVL: This voltage is used during self-calibration (AMPTD CAL) at which time +LVL jumps to various levels for a period of about 1 second. At all other times, +LVL remains at approximately -10.2V.

AMPL: This voltage controls the amplitude of all functions. The normal amplitude range is -4.0V to +10V.

Programmed Sine Amplitude	TP AMPL
2.99Vp-p	+7V
3.00Vp-p	−4V
10.00Vp-p	+10V
Sine function off	−10V

OS2: This voltage controls the D.C. offset of the output waveform.

With Sine function off:

Programmed D.C. Offset	TP OS2
+5Vdc	+10V
−5Vdc	−10V

OS1: This is the DC offset error correction voltage and is calculated during a self-calibration. This voltage should always be close to 0V.

XDR: X Drive is zero when not sweeping. It's -10V for a one second sweep and -0.1V for a 99 second sweep.

A common problem with this section of the A14 board is loading of the DAC test point by a bad analog switch, Op-Amp, or a Sample/Hold capacitor. To check for a loading problem, unsolder the lead nearest the DAC test point on the resistor (R55) between A14U16 pin 6 and the test point. Attach an oscilloscope probe to the unsoldered lead of the resistor and monitor the DAC pulse train. Continue to observe this pulse train while pressing the resistor lead down so that it makes contact with the point from which it was unsoldered. If any change in the levels of the pulse train is observed, the waveform is being loaded by a defective analog switch or Op-Amp.

The Preset Counters and Data Latch are not easily checked, but fortunately they seldom fail. If the correct DAC pulse train is observed with Auto-Cal disabled, the counters are working correctly. Data pulses with TTL levels should be observable at all times at the inputs and outputs of A14U6-A14U9 and A14U29. If any of these are not TTL levels or are not changing, then the IC is suspect.

With the oscilloscope externally triggered at the AZ test point, the switch drive signals (from the Sample/Hold Latch, U26) can be observed at the latch outputs and the Analog Switch inputs (U20 and U24). Pulse timing can be compared to the DAC Integrator outputs. Pulses should be present at the inputs to U26 continually.

The charge time and consequently the output voltage of the DAC Integrator is determined by the width of the output pulses from U10. These pulses turn on the dual current source, and the total current charges the integrator capacitor. The U10 outputs are negative-going pulses.

Pulses should be present at the input and output pins of the various IC's. The Load LSD, Load MSD, and S/H Strobe pulses should occur at a 1 kHz rate. The 2 MHz Reference (at the 2 MHz test point) is divided by 2 in U14 to provide a clock signal to the DAC circuits.

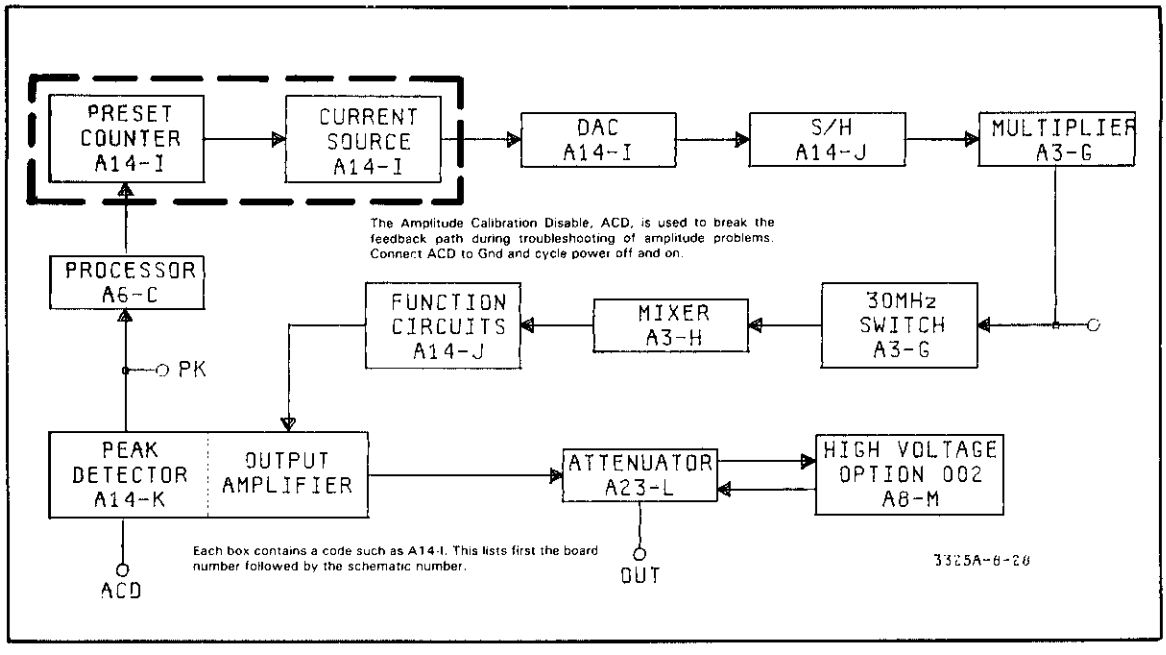

Figure 8-I-1. Sine Amplitude Control Path.

Designator	Board Location	Designator	Board Location	Designator	Board Location	Designator	Board Location	Designator	Board Location
C1	A	C205	F	J30	H	R31	B	R136	E
C2	B			J31	D	R32	B	R137	E
C3	C	C208	F	J32	F	R33	B	R138	E
C4	C	C209	F			R34	B	R139	E
C5	C			L26	B				
C6	C	C211	F	L27	B	R36	B	R141	E
		C212	F			R37	B		
C26	A	C213	F	L76	E	R38	B	R143	E
C27	A	C214	F	L77	E	R39	B	R144	F
C28	A			L78	E	R40	B	R145	F
C29	A	C216	G	L79	F				
		C217	G			R41	B	R146	F
C31	B	C218	G	L101	D	R42	B	R147	F
C32	B	C219	G	L102	D	R43	B	R148	F
C33	B			L103	D	R44	B	R149	F
C34	B	C221	G	L104	F	R45	C		
C35	C	C222	G	L105	F			R151	F
		C223	G	L201	F	R46	B	R152	F
C36	B	C224	G			R47	B	R153	F
C37	B	C225	G	P31	D	R48	B	R154	F
C38	B			P32	F	R49	C	R156	F
C39	B	C226	G			R50	B	R157	F
		C227	G	Q1	B			R158	F
C41	B	C228	G	Q2	B	R51	C	R159	F
C42	B	C229	G	Q3	B	R52	C	R160	F
C43	B	C230	H			R53	C		
C44	B	C231	H	Q25	B	R54	C	R161	F
C45	B			Q26	B			R162	F
		C233	G	Q27	C	R56	C	R163	F
C46	B	C234	G	Q28	B			R164	F
C47	C	C235	H			R57	C		
C48	C	C236	H	Q76	H	R58	C	R166	F
C49	C	C237	H	Q77	H				
		C238	H	Q78	G	R60	C	R168	F
C61	C	C239	H					R169	F
C62	C			Q101	D	R61	C		
C63	C	C241	H	Q102	D	R62	C	R208	F
		C242	H	Q103	E	R63	C	R209	F
C65	C	C245	H	Q104	E	R64	C		
C66	C	C246	G	Q105	D	R65	C	R211	F
		CR1	A					R212	F
C76	C	CR2	C	Q106	E	R67	C		
C77	D	CR3	C	Q107	E	R68	C	R214	F
C78	G	CR4	B	Q108	E	R69	C	R215	G
C101	D	CR5	B	Q109	E	R76	C	R216	F
		CR6	A			R77	D	R217	F
C103	D	CR7	A	Q112	F	R78	H	R218	G
C104	D			Q113	F	R79	H	R219	G
		CR76	H	Q114	F	R80	H		
C107	D					R81	H	R221	G
C108	D	CR101	D	Q116	F			R222	G
C109	D	CR102	D	Q117	F	R100	D	R223	G
C110	D	CR103	E	Q118	F	R101	D	R224	G
		CR104	F	Q119	F	R102	D	R226	G
C111	D					R103	D	R227	G
C112	D	CR106	F	Q201	F	R104	D	R228	G
C113	D	CR107	F	Q202	G	R105	D	R229	G
C114	D			Q203	G				
		CR205	G	Q204	G	R106	D	R231	G
C116	D	CR208	G			R107	D	R232	G
C117	D	CR209	G	Q206	G	R108	D	R233	G
C118	E			Q207	G	R109	D	R234	G
C119	E	CR210	G	Q208	G	R110	D		
				Q209	G			R236	G
C121	E	CR211	G			R111	D	R237	G
C122	E	CR212	G	Q211	H	R112	E	R238	G
C123	E	CR213	G	Q212	H	R113	E	R239	G
C124	E	CR214	G	Q213	H	R114	E	R241	G
		CR215	H	Q214	H			R242	F
C126	E					R116	E	R243	G
C127	E	CR216	G	Q216	H	R117	E	R244	G
C128	E	CR217	H	Q217	G	R118	E		
C129	E	CR218	H	Q218	H	R119	E	R246	G
		CR219	H	Q219	H	R120	E	R247	H
C131	E	CR220	H					R248	H
C132	E	CR221	H	R1	A	R121	E	R249	G
C133	E					R122	E	R250	H
		F1	B	R3	A	R123	E		
		F2	A	R4	C	R124	E	R251	G
C134	E	F3	G	R5	B			R252	H
C135	F	F4	G			R126	E	R253	G
C136	F	J1	F	R6	B	R127	E	R254	H
C137	F	J2	G	R7	B	R128	E	R255	G
C138	F	J4	H	R8	B	R129	E		
C139	F	J5	G	R9	C			R256	H
						R131	E	R257	H
C141	F	J9	B	R11	C	R132	E	R258	H
C142	F	J12	A			R133	E	R259	H
C143	F	J13	B	R26	A	R134	E	R260	G
C144	F	J14	C	R27	A				
				R28	A				
C203	F	J23	F	R29	A				
		J24	D						

Fig 8-42
Sht 1 of 4

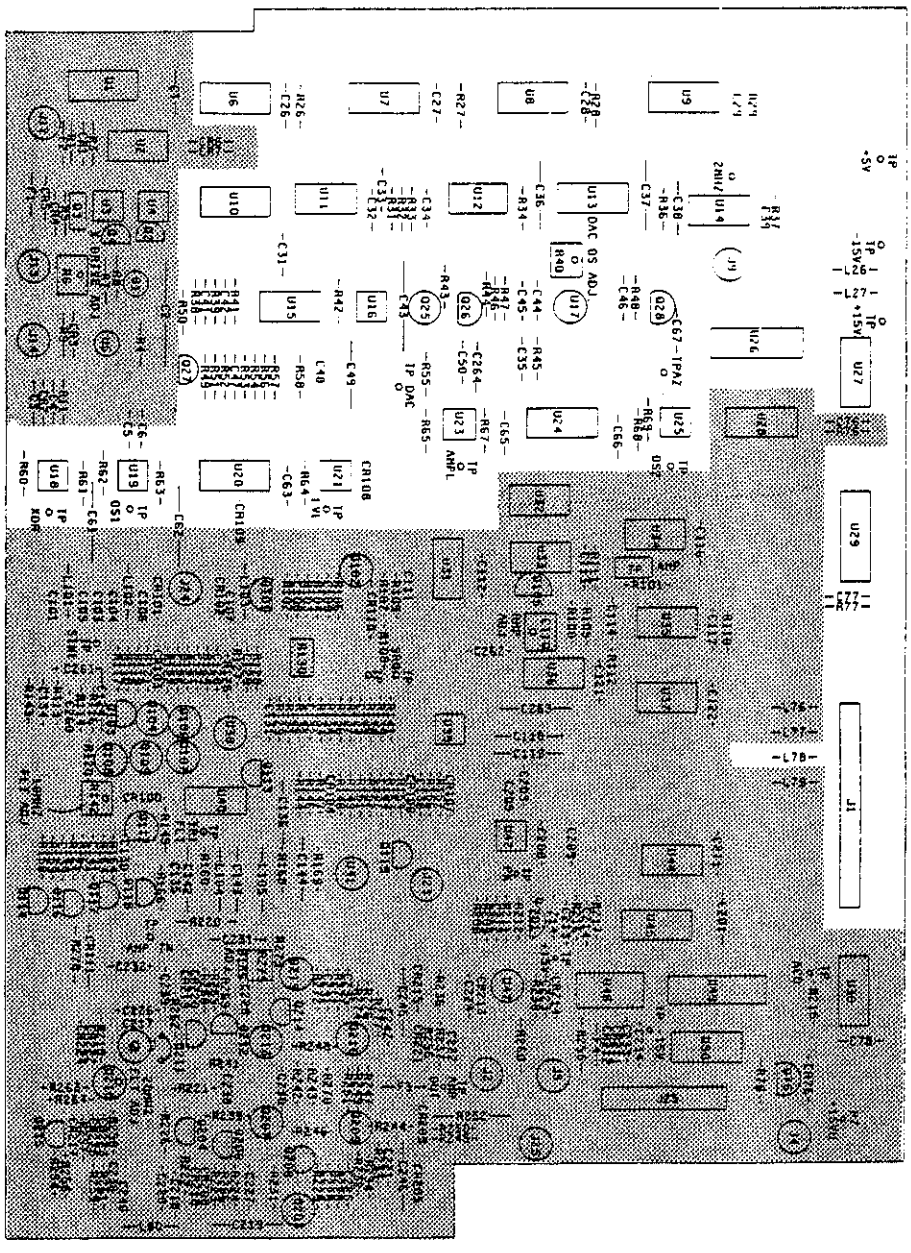

A14
03325-66514
Rev C

R261	H	Test Points				U9	A	U29	D
R262	H	2MHz	A			U10	B	U30	G
R263	H	+5V	A	PK	F	U11	B	U31	D
R264	H			RMP	D	U12	B	U32	D
R265	H	+15V	B	SINE	E	U13	B	U33	D
		-15V	B	SQR	E	U14	B	U34	D
R266	H	+15V	G	TRI	E	U15	B	U35	D
R267	H	-15V	G	TRIFILT	F	U16	B	U36	E
R268	H			XDR	D	U17	B	U37	E
R269	H	ACD	G			U18	C	U38	E
R270	H	AMPL	C	U1	A	U19	C	U39	E
R271	H	AMP OUT	G	U2	A	U20	C	U40	F
R272	H	AZ	C	U3	B	U21	C	U41	F
R273	H			U4	B	U23	C	U42	F
R274	H	DAC	C	U5	C	U24	C	U44	F
R275	H	GND	G	U6	C	U25	C	U45	F
		LVL	D	U7	A	U26	C	U46	G
R276	H	OS1	D	U8	A	U27	C	U47	G
R277	H	OS2	C			U28	C	U48	G
								U49	G
								U50	G

Fig 8-42
Sht 2 of 4

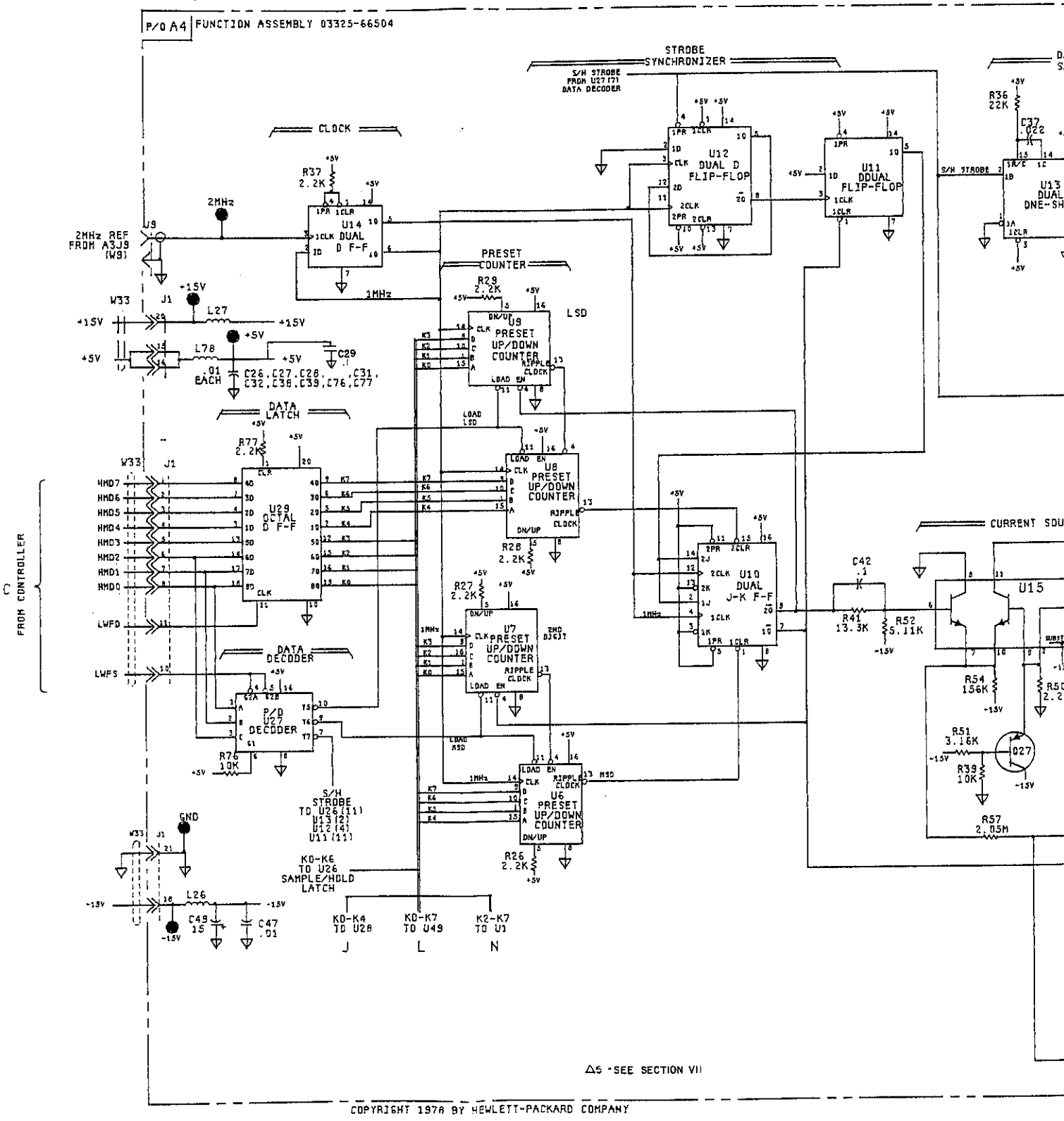

COPYRIGHT 1978 BY HEWLETT-PACKARD COMPANY

Fig 8-42
Sht 3 of 4

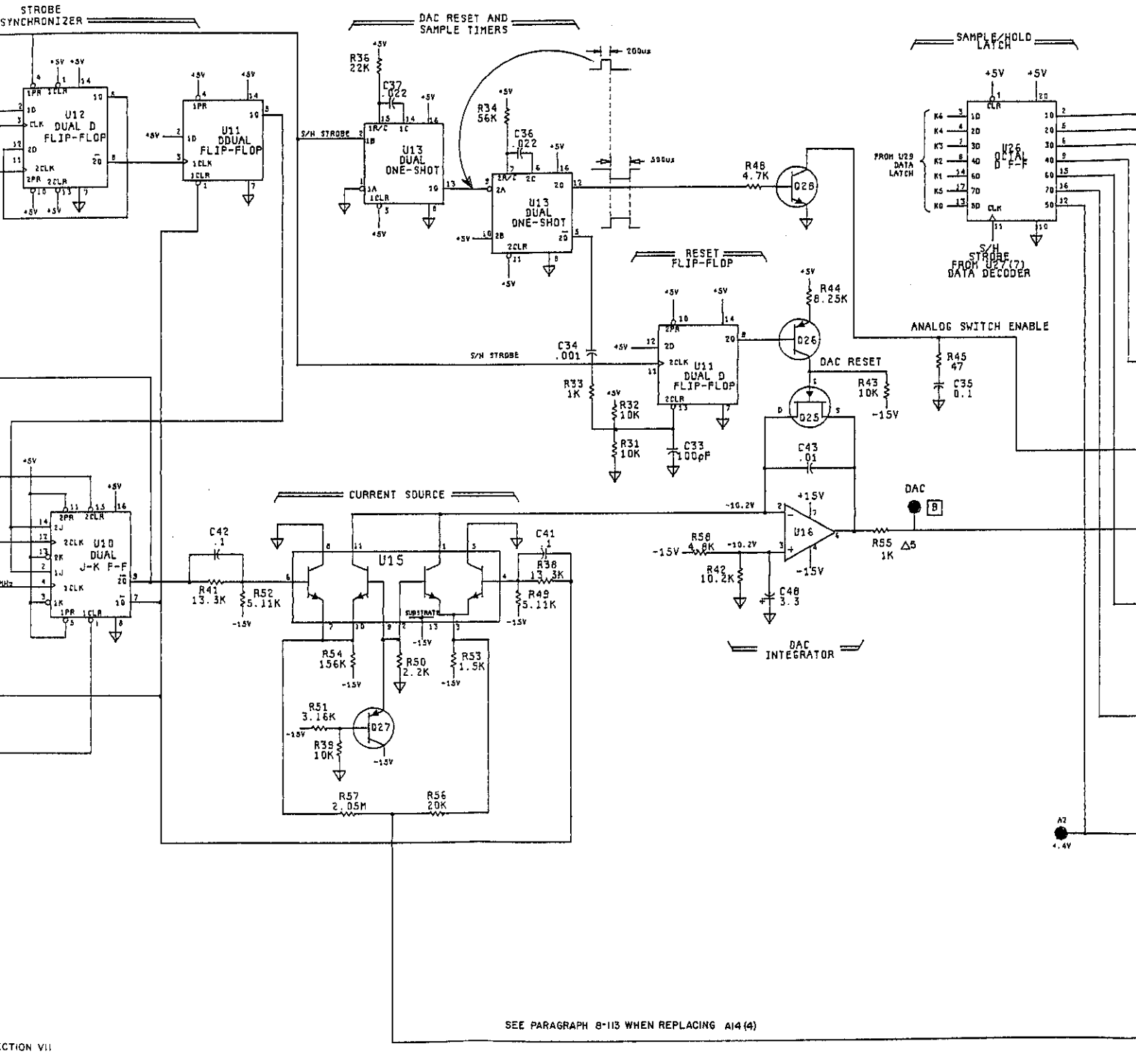

SEE PARAGRAPH 8-113 WHEN REPLACING A14 (4)

Fig 8-42
Sht 4 of 4

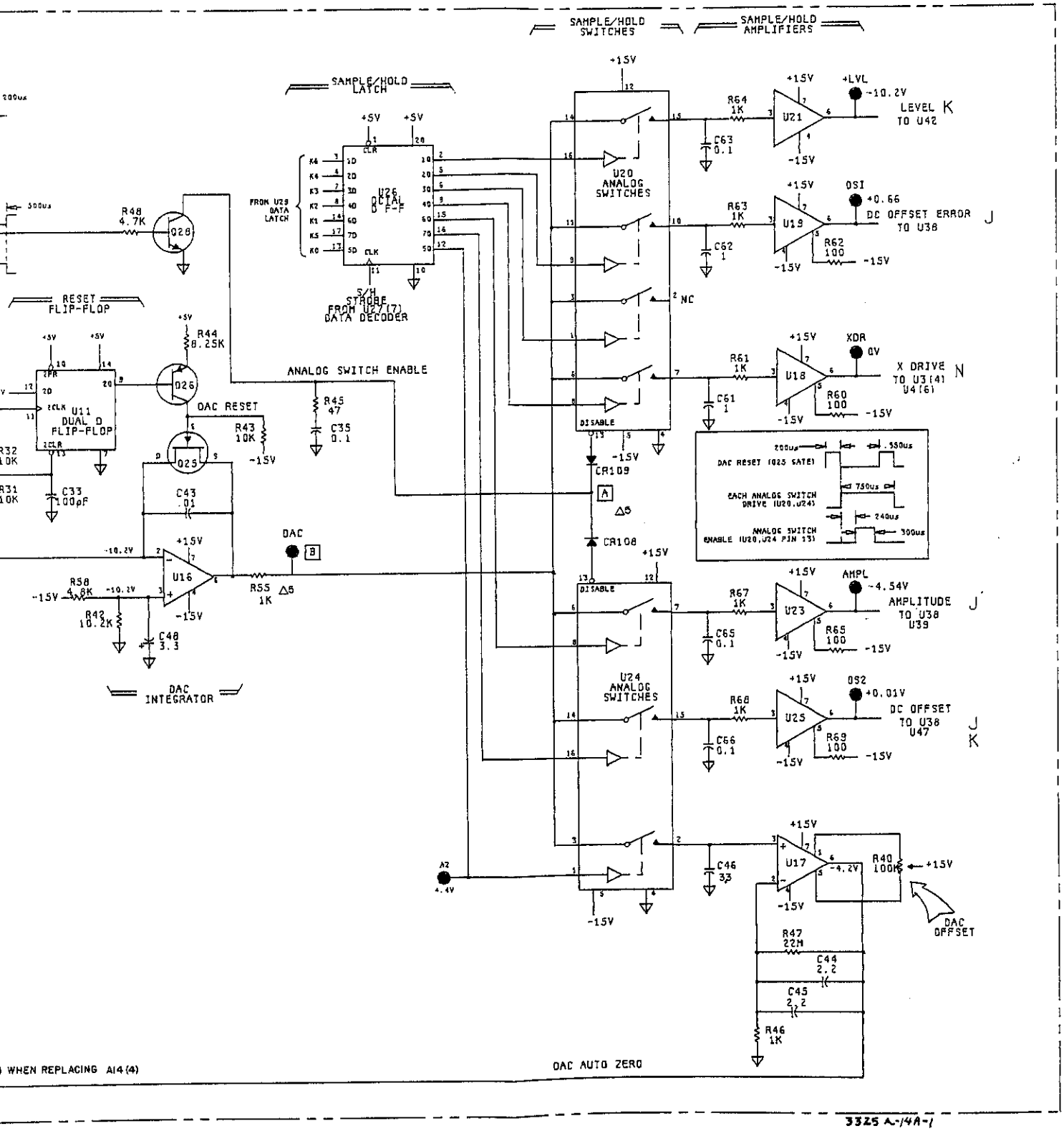

Figure 8-42. D/A Converter and Sample/Hold, A14.
8-I-5/8-I-6

SERVICE GROUP J - FUNCTION CIRCUITS.

Function Circuits Troubleshooting.

The A14Q112 amplifier circuit supplies sine wave current to the output amplifier. Disconnect the cable (marked "23 ALC") from A14J23 to permit maximum signal amplitude at A14 test point SIN.

CAUTION

Do not allow disconnected cable connector to contact the printed circuit boards or components, or circuits may be damaged.

The sine wave signal at test point SIN should be approximately 200 mV p-p at the selected frequency.

If this signal is not correct, the trouble is ahead of the SIN test point. If the sine function is the only one not operating correctly, check the diode CR101 and the filter components in the Q112 emitter circuit.

If there is a signal at the SIN test point, check the Sine Enable voltage at U28 pin 10. This should be at a TTL high level. If not, check input and clock signals to U28 and U27. The inputs to U28 can be traced to U29, Service Group I.

Be sure to reconnect cable 23 to A14J23.

Square, Triangle, and Ramp Functions.

If the sine function is operating properly, but none of the other functions is correct, the trouble is probably in the Q101, Q102 circuits or U31 inverters. Also check for the correct enable signals from U28. The table next to U28 on the schematic relates the functions to the enable signal levels. The trouble may also be in the Offset and Amplitude Control circuits.

Square Function Only.

If the square wave function only is not operating properly, observe the signal at the SQR test point on A14. This should be a TTL level square wave at the selected frequency.

If this signal is not present, check the Square Enable voltage level at U33 pin 4, which should be TTL high. If correct, check the clock input at U33 pin 3, then the U31 inverter circuits and Q101, 102. If the signal at U31 pins 5 and 9 is correct but pins 6 and 8 are always low, it is possible that U32 could be defective.

If the signal at SQR is correct, troubleshoot the U40 circuits and the Amplitude Control circuits.

If Self Tests 1 and 3 pass and Self Test 2 fails, suspect problems with A14U42 in Service Group K.

Triangle and Ramp Functions.

If the sine and square functions are correct, but the triangle and ramp functions are not operating properly, use the following procedure.

a. Connect oscilloscope to the TRI test point (on A14). Set controls as follows:

Vertical ..... 0.2 V/div (÷ 10 probe)
Sweep ..... 0.1 μs/div
Trigger ..... Int/+ slope

b. Set the 3325A as follows:

Function ..... Triangle
Frequency ..... 1 Hz
Amplitude ..... 10 V p-p

c. The pulse width of the TRI signal should increase and decrease at a 1 Hz rate (TTL levels).

d. Monitor pin 9 of U36 with the oscilloscope. This should be a TTL square wave, frequency 1 MHz (actually 1.000 001 MHz). If not, go to Step f.

e. The signal at pin 10 of U36 should be a TTL square wave at 1 MHz. If not, go to the 2 MHz test point and trace the signal through to U36 pin 10. U14 divides the 2 MHz reference by two. If U14 is not operating, check for a TTL high Triangle Enable at U14 pin 10.

f. If the proper signal is not present at U36 pin 9, trace the signal back through U32, which is a ÷ 10 counter. Also check for a TTL high Triangle Enable level at U33 pin 10.

g. If the digital signals are all correct the trouble may be in U40 or the Triangle and Ramp Filter circuits. Observe the signal at the TRIFILT test point. It should be a triangle or ramp (selected function) approximately 200 mV p-p. If not, check U40 output at pin 13. Measure voltages in the Q114–Q118 circuits.

Ramp Functions Only.

If only the ramp functions are not operating properly, the trouble is probably in the ramp reset circuits.

a. Connect an oscilloscope to the TRI test point (on A14). Set the controls as follows:

Vertical ..... 0.2 V/div (÷ 10 probe)
Sweep ..... 0.1 μs/div
Trigger ..... Int/+ slope

b. Set the 3325A as follows:

Function ..... + Ramp
Frequency ..... 1 Hz
Amplitude ..... 10 V p-p

c. The width of the positive pulse should decrease to zero, then reset and repeat at a 1 Hz rate (TTL levels).

d. Change function to − Ramp. The positive pulse at the TRI test point should increase to maximum, then reset to zero and repeat at a 1 Hz rate. If the signal is the same as the correct signal in Step d, the Ramp Polarity signal from U28 pin 5 may be incorrect. This level should be high for − Ramp function and low for + Ramp.

e. If the pulse width in Step c or d increases and decreases, the pulse reset circuits are not operating, and the 3325A output signal should be a triangle, at a 0.5 Hz rate.

f. At frequencies below 100 Hz, the ramps are reset by the digital Phase Detector, U35. Check for negative-going pulses at U35 pin 6, positive-going pulses at U37 pin 8, and negative-going pulses at U37 pin 6. Each pulse should toggle the output of U34, pin 8. The Ramp Enable level at U34 pin 10 must be high.

g. At frequencies of 100 Hz and higher, ramps are reset by the ± Ramp Reset pulses generated by the Ramp Reset one-shots (U45, Service Group K) which are triggered by the Level Comparator output, U42 pin 7. These are also negative-going pulses, approximately 10 μs wide.

DC Offset and Amplitude Troubleshooting.

Problems in the Amplitude and Offset control circuits are most easily located by measuring dc voltages. The voltages shown on the schematic are measured with the instrument in the turn-on state (power switched from STBY to ON). Amplitude problems have in the past, been linked to U38, U39, and U40 failures. If the amplitude level from the DAC (see AMPL test point - Service Group I) is correct as well as the voltages at A3TP4 (Service Group G), then the amplitude control circuitry in this service group is suspect.

A dc offset in sine function only may be caused by a fault in the Q103, Q104 circuits.

If the square, triangle, and ramp functions are inoperative, or if the DC Offset (no ac function) is one-half the programmed level, the problem may be in Offset Control circuits U38B, Q106, U41B, or Q113.

The voltages at Q108 emitters should always be identical.

Clipping of the positive or negative peaks on the output waveform is sometimes caused by a fault in the D.C. Offset Current circuitry. Too much or too little offset current causes the output amplifier to saturate on either the positive or negative peaks.

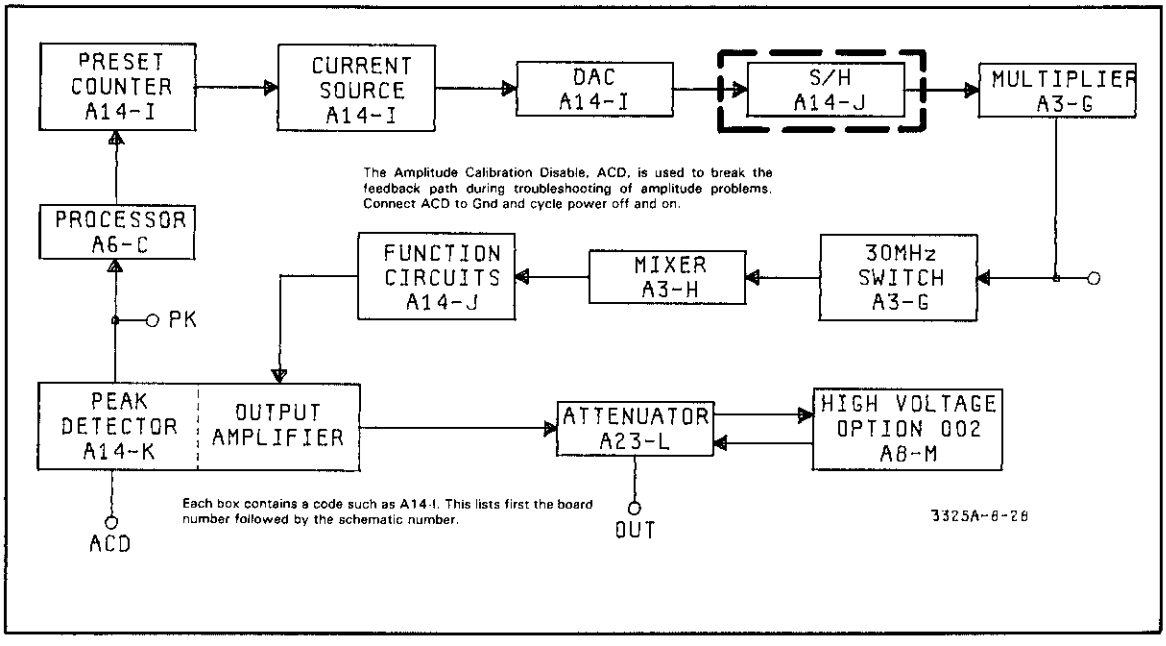

Figure 8-J-1. Sine Amplitude Control Path.

Designator	Board Location	Designator	Board Location	Designator	Board Location	Designator	Board Location	Designator	Board Location
C1	A	C205	F	J30	H	R31	B	R136	E
C2	B			J31	D	R32	B	R137	E
C3	C	C208	F	J32	F	R33	B	R138	E
C4	C	C209	F			R34	B	R139	E
C5	C			L26	B				
C6	C	C211	F	L27	B	R36	B	R141	E
		C212	F			R37	B		
C26	A	C213	F	L76	E	R38	B	R143	E
C27	A	C214	F	L77	E	R39	B	R144	F
C28	A			L78	E	R40	B	R145	F
C29	A	C216	G	L79	F				
		C217	G			R41	B	R146	F
C31	B	C218	G	L101	D	R42	B	R147	F
C32	B	C219	G	L102	D	R43	B	R148	F
C33	B			L103	D	R44	B	R149	F
C34	B	C221	G	L104	F	R45	C		
C35	C	C222	G	L105	F			R151	F
		C223	G	L201	F	R46	B	R152	F
C36	B	C224	G			R47	B	R153	F
C37	B	C225	G	P31	D	R48	B	R154	F
C38	B			P32	F	R49	C	R156	F
C39	B	C226	G			R50	B	R157	F
		C227	G	Q1	B			R158	F
C41	B	C228	G	Q2	B	R51	C	R159	F
C42	B	C229	G	Q3	B	R52	C	R160	F
C43	B	C230	H			R53	C		
C44	B	C231	H	Q25	B	R54	C	R161	F
C45	B			Q26	B			R162	F
		C233	G	Q27	C	R56	C	R163	F
C46	B	C234	G	Q28	B			R164	F
C47	C	C235	H			R57	C		
C48	C	C236	H	Q76	H	R58	C	R166	F
C49	C	C237	H	Q77	H				
		C238	H	Q78	G	R60	C	R168	F
C61	C	C239	H					R169	F
C62	C			Q101	D	R61	C		
C63	C	C241	H	Q102	D	R62	C	R208	F
		C242	H	Q103	E	R63	C	R209	F
C65	C	C245	H	Q104	E	R64	C		
C66	C	C246	G	Q105	D	R65	C	R211	F
		CR1	A					R212	F
C76	C	CR2	C	Q106	E	R67	C		
C77	D	CR3	C	Q107	E	R68	C	R214	F
C78	G	CR4	B	Q108	E	R69	C	R215	G
C101	D	CR5	B	Q109	E	R76	C	R216	F
		CR6	A			R77	D	R217	F
C103	D	CR7	A	Q112	F	R78	H	R218	G
C104	D			Q113	F	R79	H	R219	G
		CR76	H	Q114	F	R80	H		
C107	D					R81	H	R221	G
C108	D	CR101	D	Q116	F			R222	G
C109	D	CR102	D	Q117	F	R100	D	R223	G
C110	D	CR103	E	Q118	F	R101	D	R224	G
		CR104	F	Q119	F	R102	D	R226	G
C111	D					R103	D	R227	G
C112	D	CR106	F	Q201	F	R104	D	R228	G
C113	D	CR107	F	Q202	G	R105	D	R229	G
C114	D			Q203	G				
		CR205	G	Q204	G	R106	D	R231	G
C116	D	CR208	G			R107	D	R232	G
C117	D	CR209	G	Q206	G	R108	D	R233	G
C118	E			Q207	G	R109	D	R234	G
C119	E	CR210	G	Q208	G	R110	D		
				Q209	G			R236	G
C121	E	CR211	G			R111	D	R237	G
C122	E	CR212	G	Q211	H	R112	E	R238	G
C123	E	CR213	G	Q212	H	R113	E	R239	G
C124	E	CR214	G	Q213	H	R114	E	R241	G
		CR215	H	Q214	H			R242	F
C126	E					R116	E	R243	G
C127	E	CR216	G	Q216	H	R117	E	R244	G
C128	E	CR217	H	Q217	G	R118	E		
C129	E	CR218	H	Q218	H	R119	E	R246	G
		CR219	H	Q219	H	R120	E	R247	H
C131	E	CR220	H					R248	H
C132	E	CR221	H	R1	A	R121	E	R249	G
C133	E					R122	E	R250	H
		F1	B	R3	A	R123	E		
C134	E	F2	A	R4	C	R124	E	R251	G
C135	F	F3	G	R5	B			R252	H
		F4	G			R126	E	R253	G
C136	F			R6	B	R127	E	R254	H
C137	F	J1	F	R7	B	R128	E	R255	G
C138	F	J2	G	R8	B	R129	E		
C139	F	J4	H	R9	C			R256	H
		J5	G			R131	E	R257	H
C141	F			R11	C	R132	E	R258	H
C142	F	J9	B			R133	E	R259	H
C143	F	J12	A	R26	A	R134	E	R260	G
C144	F	J13	B	R27	A				
		J14	C	R28	A				
C203	F			R29	A				
		J23	F						
		J24	D						

R261	H
R262	H
R263	H
R264	H
R265	H
R266	H
R267	H
R268	H
R269	H
R270	H
R271	H
R272	H
R273	H
R274	H
R275	H
R276	H
R277	H

Test Points	
2MHz	A
+5V	A

+15V	B
-15V	B
+15V	G
-15V	G
ACD	G
AMPL	C
AMP OUT	G
AZ	C
DAC	C
GND	G
LVL	D
OS1	D
OS2	C
PK	F
RMP	D
SINE	E
SQR	E
TRI	E
TRIFILT	F
XDR	D

U1	A
U2	A
U3	B
U4	B
U5	C
U6	C
U7	A
U8	A
U9	A
U10	B
U11	B
U12	B
U13	B
U14	B
U15	B
U16	B
U17	B
U18	C
U19	C
U20	C
U21	C

U23	C
U24	C
U25	C
U26	C
U27	C
U28	C
U29	D
U30	G
U31	D
U32	D
U33	D
U34	D
U35	D
U36	E
U37	E
U38	E
U39	E
U40	F
U41	F
U42	F
U44	F
U45	F
U46	G
U47	G
U48	G
U49	G
U50	G

Fig 8-43
Sht 1 of 5

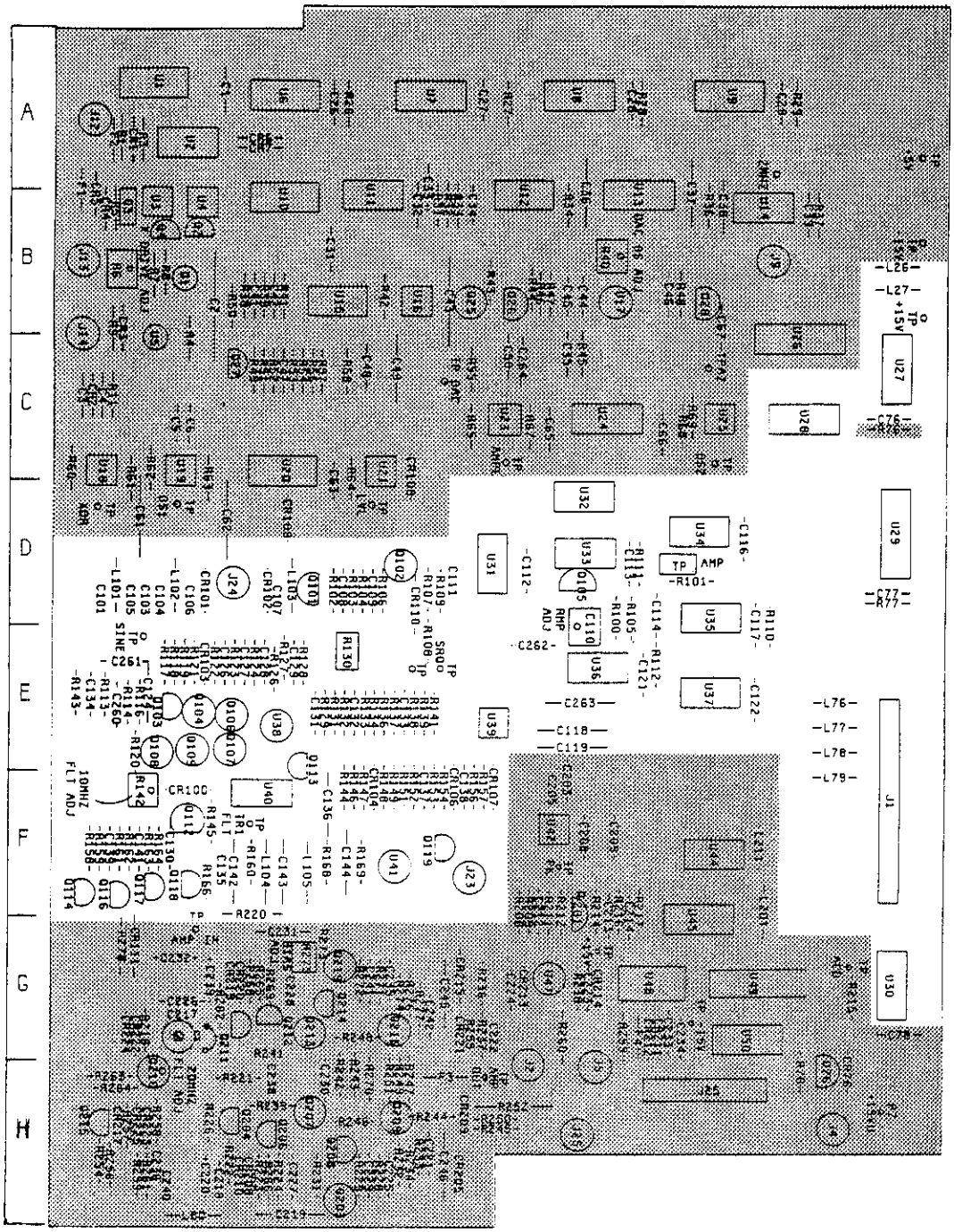

A14
03325-66514
Rev C

Fig 8-43
Sht 2 of 5

Note 1: These voltage levels are useful when troubleshooting amplitude problems. Levels shown occur with the 3325A's frequency set to 1kHz, and with Auto Calibration Disable (ACD) grounded.

Programmed Amplitude (Vp-p)	TP AMP IN (0V dc offset)		TP AMP IN (2V dc offset)	
	Vp-p	DC Level	Vp-p	DC Level
1	0.16	5.17	0.06	5.1
2	0.28	5.17	0.1	5.1
3	0.16	5.17	0.14	5.1
4	0.20	5.17	0.18	5.1
5	0.24	5.17	0.22	5.1
6	0.28	5.17	0.26	5.1
7	0.32	5.17		
8	0.38	5.17		
9	0.44	5.17		
10	0.48	5.17		

Fig 8-43
Sht 3 of 5

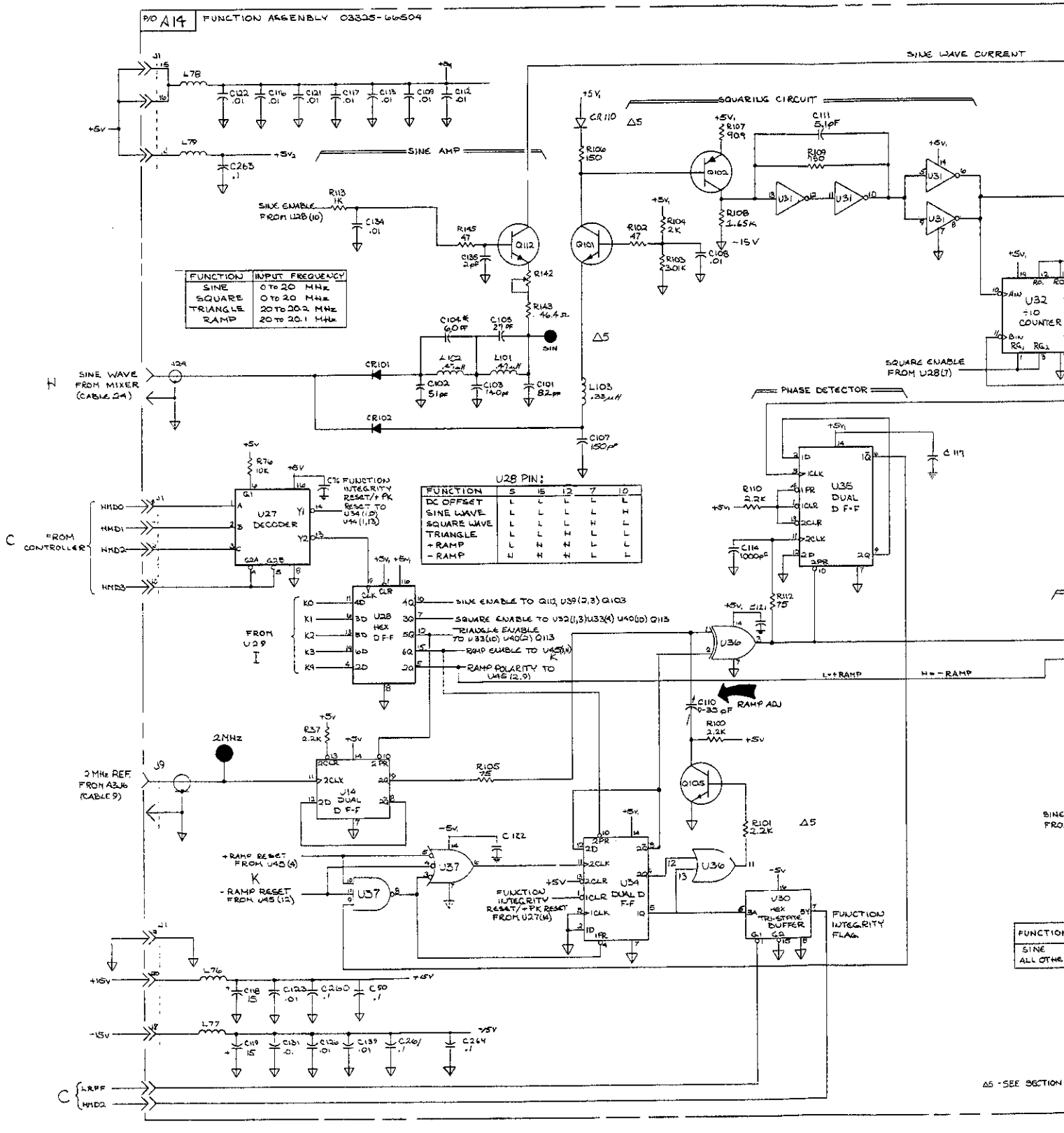

Fig 8-43
Sht 4 of 5

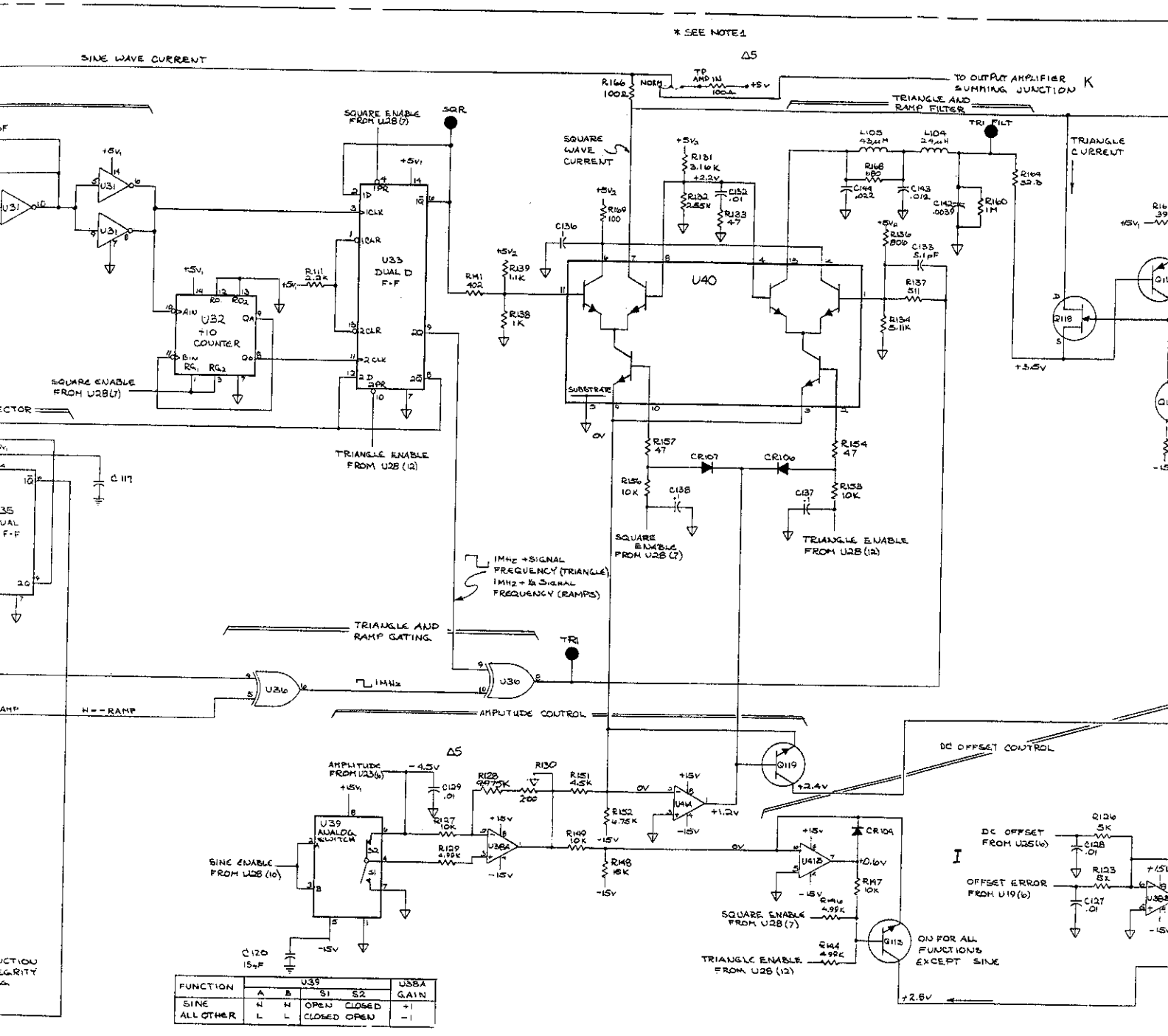

FUNCTION	U39 A	U39 B	U39 S1	U39 S2	U38A GAIN
SINE	H	H	OPEN	CLOSED	+1
ALL OTHER	L	L	CLOSED	OPEN	-1

Δ5 - SEE SECTION VII

SEE PARAGRAPH 8-113 WHEN REPLACING A14 (4)

Fig 8-43
Sht 5 of 5

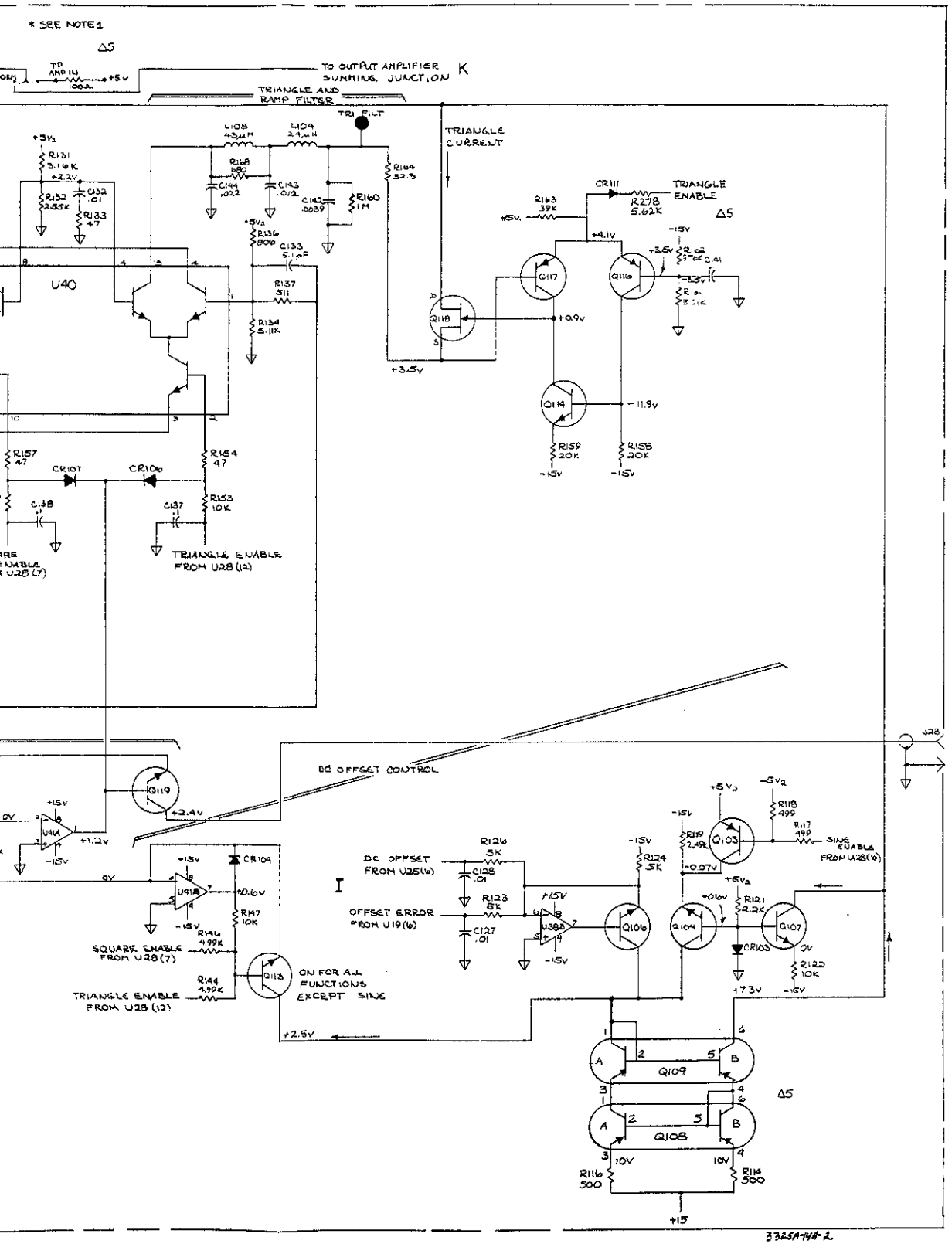

Figure 8-43. Function Circuits, A14.
8-J-7/8-J-8

SERVICE GROUP K - OUTPUT AMPLIFIER AND LEVEL COMPARATOR.

Output Amplifier and Level Comparator Troubleshooting.

If the instrument accepts and displays entries, but there is neither a signal nor sync output, the trouble may be in the Output Amplifier circuit. Note that when troubleshooting amplitude problems, the Auto Calibration Disable (ACD) test point must be grounded and the power cycled (Figure 8-44). This procedure breaks the amplitude loop and makes it possible to troubleshoot the amplitude control path (see Figure 8-K-1).

a. Move the small shorting connector marked AMP IN (on A14) from the NORM to the opposite position.

b. Disconnect any external equipment from the signal output.

c. Measure the dc voltage at the AMP OUT test point and at both ends of the fuse, F3. These voltages should be approximately +7.5 V.

If these voltages are all correct, the amplifier is probably operating correctly, and the problem may be in the Attenuator, Service Group L.

The fuse F3 can be opened when excessive voltage is applied to the 3325A's signal port. It, therefore, blows fairly often and should be replaced as necessary (0.25A, -hp- Part No. 2110-0343).

If the amplifier output voltage is not correct, troubleshoot the amplifier circuit by measuring dc voltages within the circuit as shown on the schematic (tolerance ± 10%). These voltages are measured with the AMP IN shorting connector in the TEST position. While troubleshooting, note that the circuit from the node common to the bases of A14Q207 and A14Q213 to the AMP OUT test point is a voltage follower. Therefore, the waveform at the node and at the test point should be the same. When troubleshooting the circuit from A14Q210 to A14Q209, it is helpful to check the forward and backward resistance of each transistor.

Be sure to replace the shorting connector to the NORM position after troubleshooting.

If the 3325A does not meet accuracy specifications at 20MHz after repair of the output amplifier, and the flatness cannot be adjusted properly with the FLT adjustment (Section V, Amplitude Flatness Adjustment), it may be necessary to select a different value for A14C103 (Service Group J). Increasing the value increases the output amplitude at higher frequencies, and vice versa. Note that the 20MHz flatness adjustment (FLT) affects square wave overshoot.

No Sync Output, Signal Output Normal.

If the signal output is normal but there is no sync output, check for a square wave at both ends of the fuse, F4. With no external equipment connected to the sync output, this should be a TTL level square wave.

If the signal is present at only one end of the fuse, replace the fuse (.125 A, -hp- Part No. 2110-0301).

If the fuse is good, trace the signal from U47 through U48. If any one of the five parallel inverters has failed with either the input or output at ground, the sync output will not be present.

If there is no signal at U47 output, move the small shorting connector marked AMP IN from the NORM position to the opposite position. The dc voltage at U47 pin 2 should then measure +3.75 V (one-half the voltage at the AMP OUT test point).

Be sure to return the shorting connector to the NORM position after troubleshooting.

Level Comparator, Level Data, and Ramp Reset Troubleshooting.

The Level Comparator output level (at PK test point) changes each time the amplifier output equals the "Level" voltage at U42 pin 3. These changes should be easily observed when the AMPTD CAL key is pressed.

The Level Comparator outputs preset the Level Data Flip-Flops, which are reset as necessary by the controller.

The Ramp Reset one-shots are triggered by the Level Comparator outputs when the Ramp Enable signal is high. The level of the Ramp Polarity signal at U45 pins 2 and 9 determines whether the + Ramp or – Ramp reset one-shot is triggered.

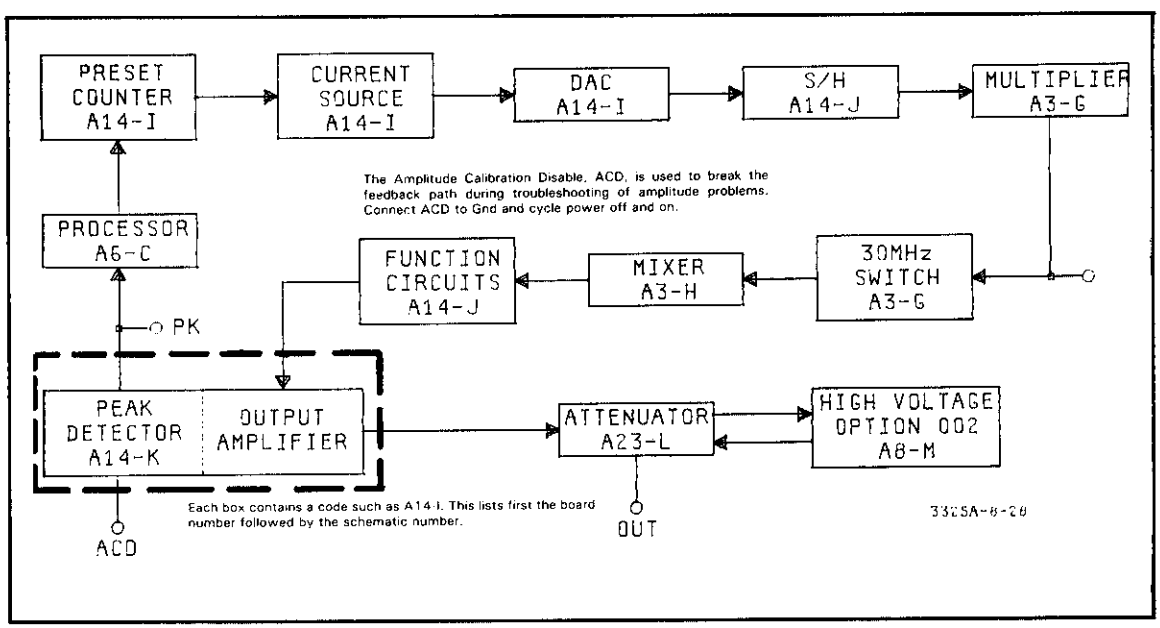

Figure 8-K-1. Sine Amplitude Control Path.

Designator	Board Location
C1	A
C2	B
C3	C
C4	C
C5	C
C6	C
C26	A
C27	A
C28	A
C29	A
C31	B
C32	B
C33	B
C34	B
C35	C
C36	B
C37	B
C38	B
C39	B
C41	B
C42	B
C43	B
C44	B
C45	B
C46	B
C47	C
C48	C
C49	C
C61	C
C62	C
C63	C
C65	C
C66	C
C76	C
C77	D
C78	G
C101	D
C103	D
C104	D
C107	D
C108	D
C109	D
C110	D
C111	D
C112	D
C113	D
C114	D
C116	D
C117	D
C118	E
C119	E
C121	E
C122	E
C123	E
C124	E
C126	E
C127	E
C128	E
C129	E
C131	E
C132	E
C133	E
C134	E
C135	F
C136	F
C137	F
C138	F
C139	F
C141	F
C142	F
C143	F
C144	F
C203	F
C205	F
C208	F
C209	F
C211	F
C212	F
C213	F
C214	F
C216	G
C217	G
C218	G
C219	G
C221	G
C222	G
C223	G
C224	G
C225	G
C226	G
C227	G
C228	G
C229	G
C230	H
C231	H
C233	G
C234	G
C235	H
C236	H
C237	H
C238	H
C239	H
C241	H
C242	H
C245	H
C246	G
CR1	A
CR2	C
CR3	C
CR4	B
CR5	B
CR6	A
CR7	A
CR76	H
CR101	D
CR102	D
CR103	E
CR104	F
CR106	F
CR107	F
CR205	G
CR208	G
CR209	G
CR210	G
CR211	G
CR212	G
CR213	G
CR214	G
CR215	H
CR216	G
CR217	H
CR218	H
CR219	H
CR220	H
CR221	H
F1	B
F2	A
F3	G
F4	G
J1	F
J2	G
J4	H
J5	G
J9	B
J12	A
J13	B
J14	C
J23	F
J24	D
J30	H
J31	D
J32	F
L26	B
L27	B
L76	E
L77	E
L78	E
L79	F
L101	D
L102	D
L103	D
L104	F
L105	F
L201	F
P31	D
P32	F
Q1	B
Q2	B
Q3	B
Q25	B
Q26	B
Q27	C
Q28	B
Q76	H
Q77	H
Q78	G
Q101	D
Q102	D
Q103	E
Q104	E
Q105	D
Q106	E
Q107	E
Q108	E
Q109	E
Q112	F
Q113	F
Q114	F
Q116	F
Q117	F
Q118	F
Q119	F
Q201	F
Q202	G
Q203	G
Q204	G
Q206	G
Q207	G
Q208	G
Q209	G
Q211	H
Q212	H
Q213	H
Q214	H
Q216	H
Q217	G
Q218	H
Q219	H
R1	A
R3	A
R4	C
R5	B
R6	B
R7	B
R8	B
R9	C
R11	C
R26	A
R27	A
R28	A
R29	A
R31	B
R32	B
R33	B
R34	B
R36	B
R37	B
R38	B
R39	B
R40	B
R41	B
R42	B
R43	B
R44	B
R45	C
R46	B
R47	B
R48	B
R49	C
R50	B
R51	C
R52	C
R53	C
R54	C
R56	C
R57	C
R58	C
R60	C
R61	C
R62	C
R63	C
R64	C
R65	C
R67	C
R68	C
R69	C
R76	C
R77	D
R78	H
R79	H
R80	H
R81	H
R100	D
R101	D
R102	D
R103	D
R104	D
R105	D
R106	D
R107	D
R108	D
R109	D
R110	D
R111	D
R112	E
R113	E
R114	E
R116	E
R117	E
R118	E
R119	E
R120	E
R121	E
R122	E
R123	E
R124	E
R126	E
R127	E
R128	E
R129	E
R131	E
R132	E
R133	E
R134	E
R136	E
R137	E
R138	E
R139	E
R141	E
R143	E
R144	F
R145	F
R146	F
R147	F
R148	F
R149	F
R151	F
R152	F
R153	F
R154	F
R156	F
R157	F
R158	F
R159	F
R160	F
R161	F
R162	F
R163	F
R164	F
R166	F
R168	F
R169	F
R208	F
R209	F
R211	F
R212	F
R214	F
R215	G
R216	F
R217	F
R218	G
R219	G
R221	G
R222	G
R223	G
R224	G
R226	G
R227	G
R228	G
R229	G
R231	G
R232	G
R233	G
R234	G
R236	G
R237	G
R238	G
R239	G
R241	G
R242	F
R243	G
R244	G
R246	G
R247	H
R248	H
R249	G
R250	H
R251	G
R252	H
R253	G
R254	H
R255	G
R256	H
R257	H
R258	H
R259	H
R260	G

R261	H	+15V	B	U1	A	U26	C
R262	H	-15V	B	U2	A	U27	C
R263	H	+15V	G	U3	B	U28	C
R264	H	-15V	G	U4	B	U29	D
R265	H			U5	C	U30	G
		ACD	G	U6	C		
R266	H	AMPL	C	U7	A	U31	D
R267	H	AMP OUT	G	U8	A	U32	D
R268	H	AZ	C	U9	A	U33	D
R269	H			U10	B	U34	D
R270	H	DAC	C			U35	D
R271	H	GND	G	U11	B		
R272	H	LVL	D	U12	B	U36	E
R273	H	OS1	D	U13	B	U37	E
R274	H	OS2	C	U14	B	U38	E
R275	H			U15	B	U39	E
		PK	F	U16	B	U40	F
R276	H	RMP	D	U17	B	U41	F
R277	H	SINE	E	U18	C	U42	F
		SQR	E	U19	C		
Test Points				U20	C	U44	F
2MHz	A	TRI	E			U45	F
+5V	A	TRIFILT	F	U21	C	U46	G
		XDR	D			U47	G
				U23	C	U48	G
				U24	C	U49	G
				U25	C	U50	G

Freq	Programmed Amplitude	TP Amp Out 0Vdc Offset	TP Amp Out 2Vdc Offset
1kHz	1	7.2Vp-p	2.4Vp-p
	2	14.4Vp-p	4.8Vp-p
	3	7.2Vp-p	7.2Vp-p
	4	9.6Vp-p	9.6Vp-p
	5	12.0Vp-p	12.0Vp-p
	6	14.4Vp-p	14.4Vp-p
	7	17.0Vp-p	—
	8	19.0Vp-p	—
	9	22.0Vp-p	—
	10	24.0Vp-p	—

Fig 8-44
Sht 1 of 4

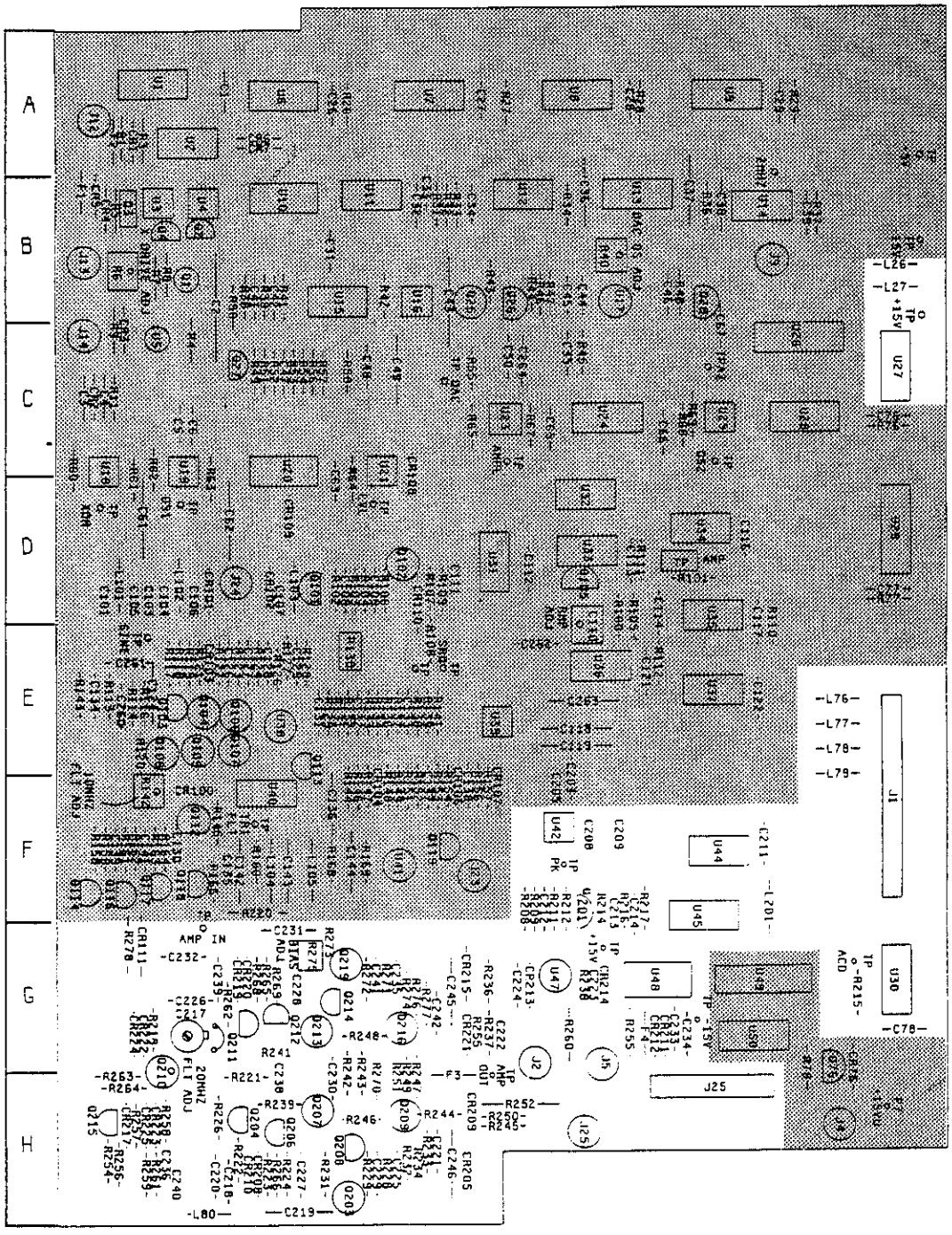

A14
03325-66514
Rev C

Fig 8-44
Sht 2 of 4

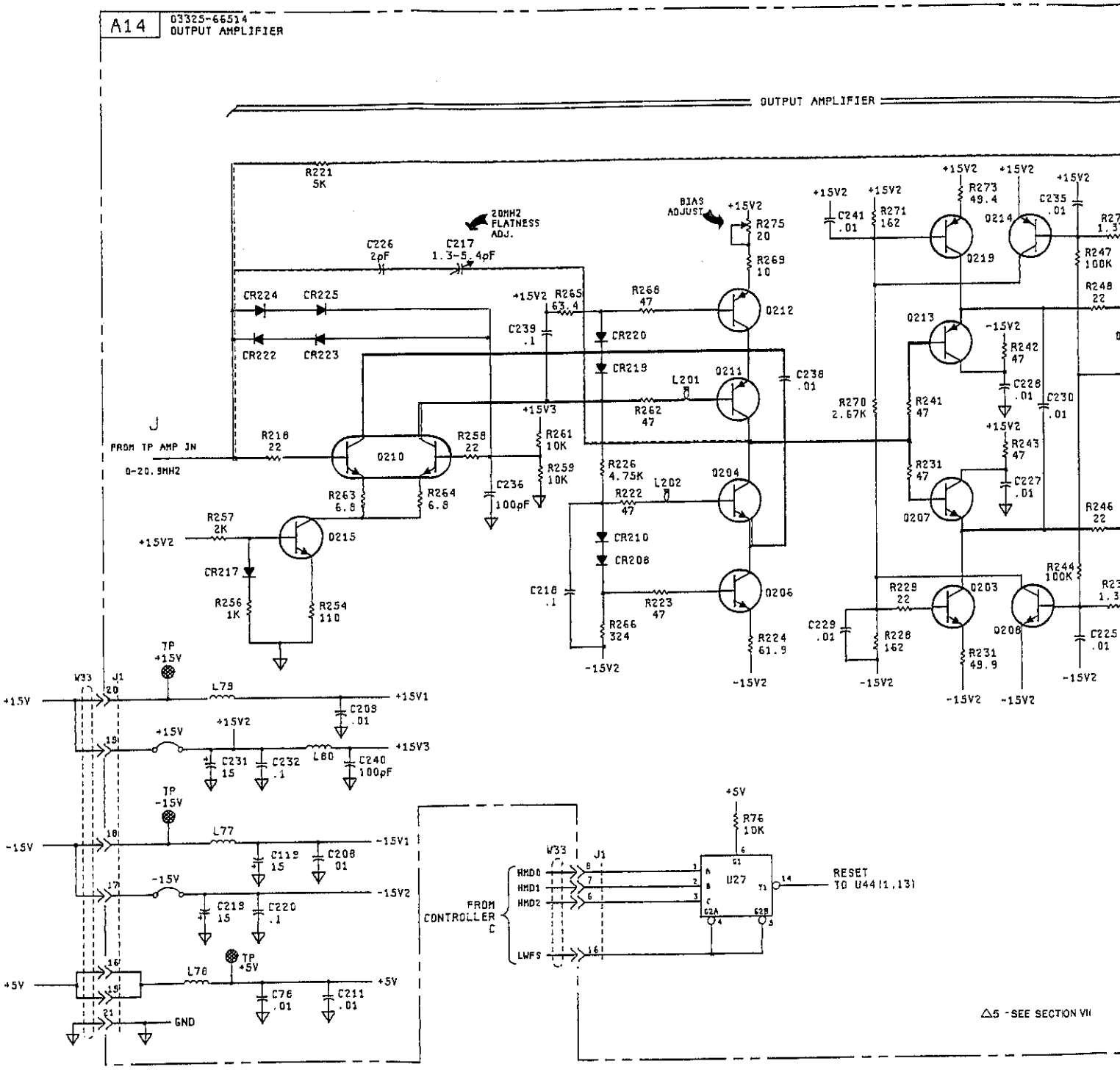

Fig 8-44
Sht 3 of 4

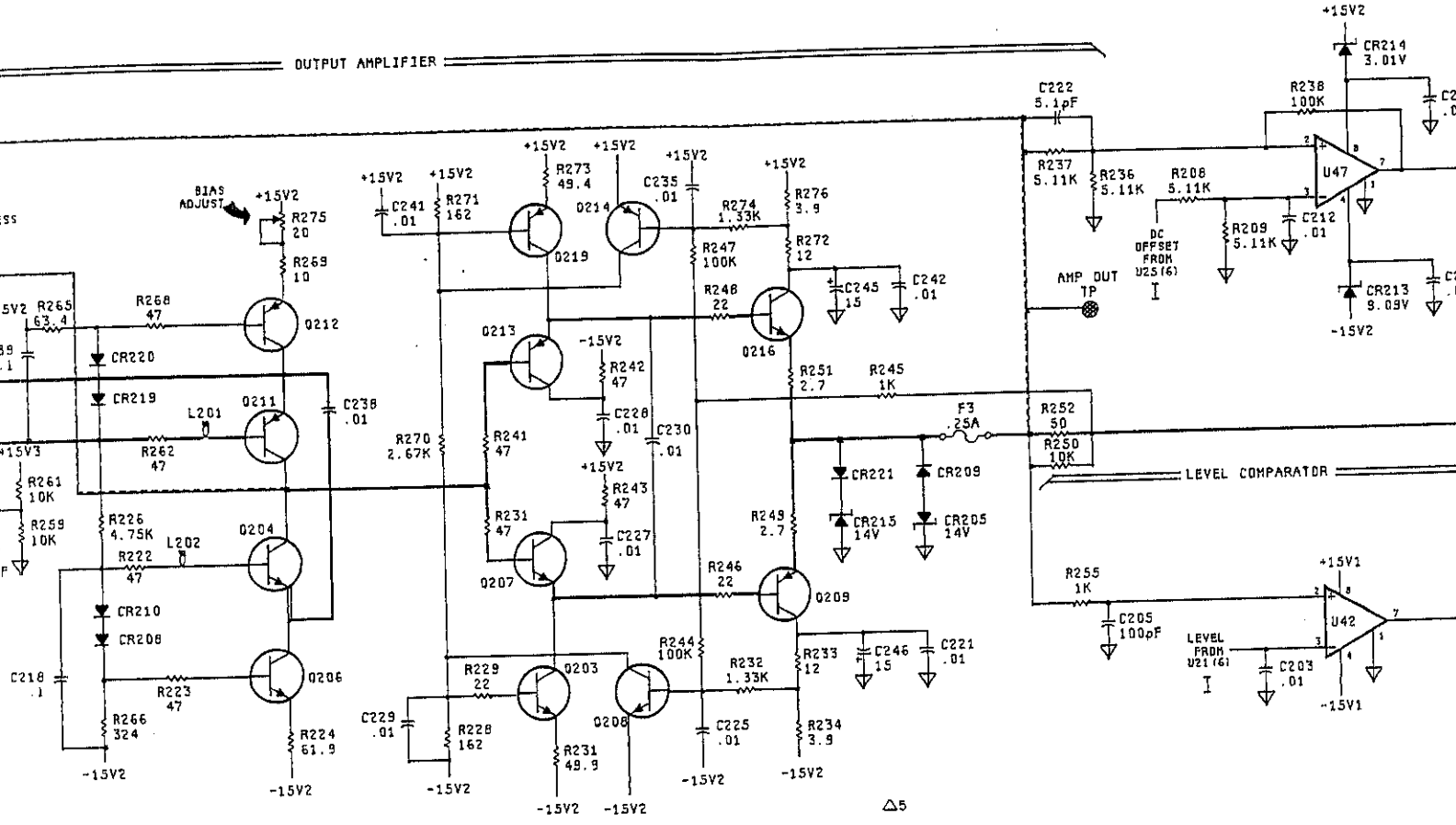

△5 -SEE SECTION VII

SEE PARAGRAPH 8-113 WHEN REPLACING A14(4)

COPYRIGHT 1980 BY THE HEWLETT-PACKARD COMP

Fig 8-44
Sht 4 of 4

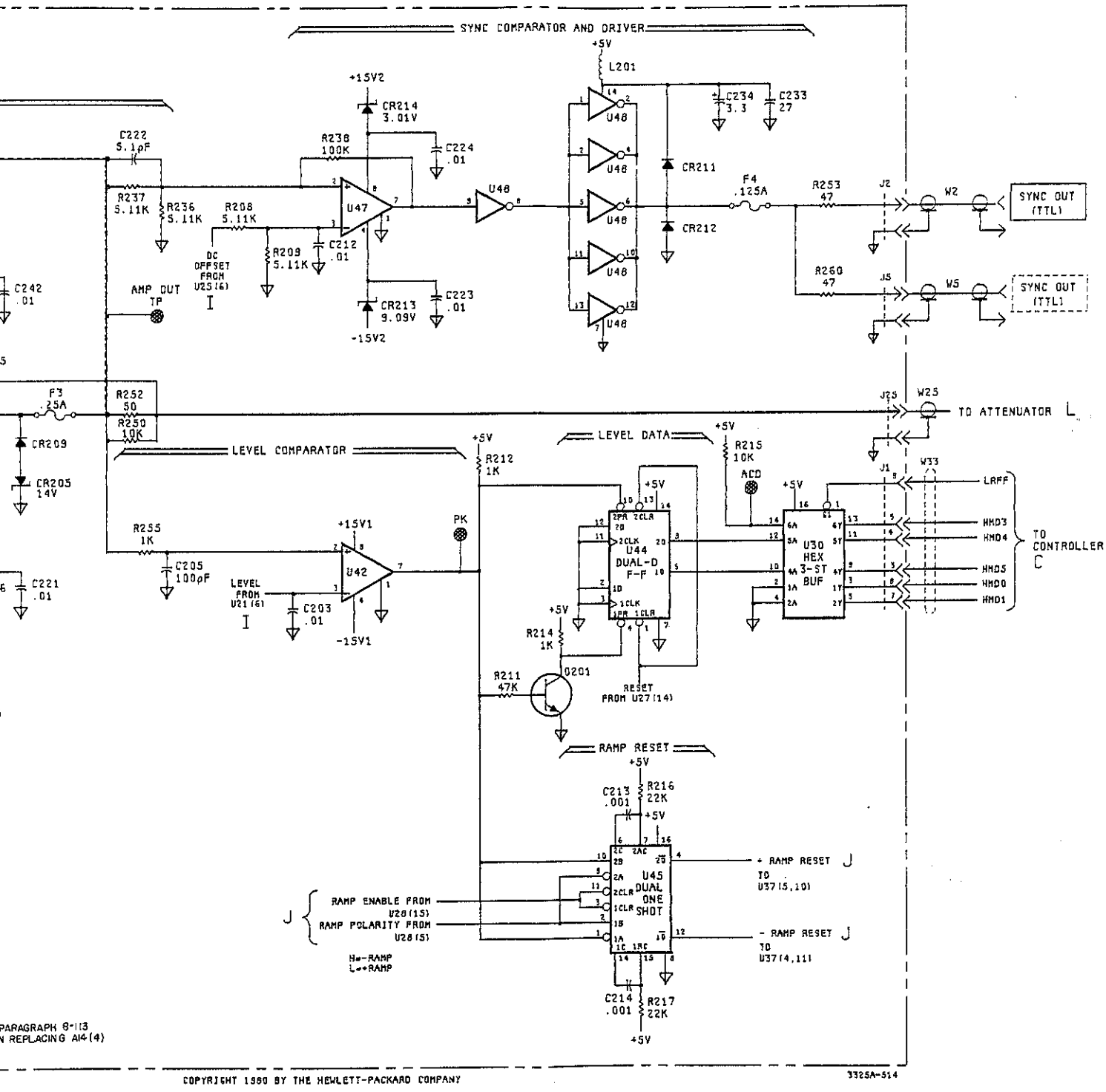

Figure 8-44. Output Amplifier, A14.
8-K-5/8-K-6

SERVICE GROUP L · ATTENUATOR.

Troubleshooting Attenuator Relays and Drivers.

Set output to:

Function . . . . . DC Offset only (no AC function)
DC Offset . . . . . 5 V

Press AMPTD CAL Key.

Measure the 3325A output voltage with a dc digital voltmeter. Do not use a 50-ohm load. The output level should be +10.000 V ±0.4%. If the output voltage is incorrect by a large amount (a factor of 3, 10, or 100 for example) one of the attenuator relays may be latched in the wrong position. With the DC Offset set to 5 V, none of the attenuator pads should be in.

	No Load Output voltage will be
If ÷ 100 pad (K1) is IN	0.100 V
If ÷ 10 pad (K2) is IN	1.000 V
If ÷ 3 pad (K3) is IN	3.333 V
If ÷ 100 and ÷ 10 pads are IN	0.010 V
If ÷ 100 and ÷ 3 pads are IN	0.033 V
If ÷ 10 and ÷ 3 pads are IN	0.333 V
If K4 is in the IN position	
Instrument with High Voltage Option 002	20.00 V
Instrument without Option 002	
(front panel output)	0 V
(rear panel output)	10.00 V

Operation of the latching relays may be checked by momentarily grounding each output of A4U50, and A4Q76 collector, as follows:

Pin No.	Relay	
10	K4	Front output or H.V. OFF
16	K4	Rear output or H.V. ON
15	K3	OUT
14	K3	IN
13	K2	OUT
12	K2	IN
11	K1	OUT
Q76 Coll.	K1	IN

A small error in the output voltage may be caused by the output amplifier or by excessive contact resistance in the attenuator relays, particularly if the error is not evident on all ranges. The following table lists the eight ranges used in the DC Offset only mode, and the relays used for each range. Relay K4 is used for all ranges.

Range	DC Offset Only (No AC Function)	Attenuator Relay Pads In
1	5.000 to 1.500 V	None
2	1.499 to 0.500 V	K3
3	499.9 to 150.0 mV	K2
4	149.9 to 50.00 mV	K2, K3
5	49.99 to 15.00 mV	K1
6	14.99 to 5.000 mV	K1, K3
7	4.999 to 1.500 mV	K1, K2
8	1.499 to 1.000 mV	K1, K2, K3

Relay drive pulses at A14U49 outputs and A14U50 and A14Q76 occur only in conjunction with a range change. Changing the output level from 5V to 1mV results in pulses to K1, K2, and K3 which place them in the "pad in" position. Changing from 1mV to 5V causes all three relays to change to the "pad out" position. Pulses may be observed at the proper points by observing an oscilloscope set to a slow sweep speed while entering the above voltages. The clock pulse to U49 may also be observed during any range change. Pulses should appear at U49 inputs continually.

A23 Attenuator Relay Cleaning and Servicing.

Removal and Replacement

Use a small screwdriver or similar tool to pry the flat spring retainer away from the side of the relay and remove the retainer. The relay can then be lifted from the board (each relay should be marked on the case to insure that they will be returned to the same position). When replacing the relay, make sure the key tabs on the bottom of the relay case are properly aligned with the holes in the printed circuit board and that the contact pins also fit properly.

Relay and Board Cleaning

Before cleaning the relays and the printed circuit board, note the following precautions:

- do not clean the relays with solvents or fluorcarbons (e.g. Freon, "Dust-OFF" flux remover, or circuit cooler).

- avoid touching the contacts

- use only low pressure (10 psi max) dry gas. CO_2, N_2, or air are all acceptable. A squeeze bulb blower is good. Do not use your mouth.

Fig 8-45

Procedure: Sht 1 of 3

a. After the relays have been removed from the board as instructed above, blow clean the relay contacts and armature with low pressure dry gas (e.g., CO_2, N_2, or air). Do not blow with your mouth.

b. Spray no-noise silicon lubricant (P/N 6030-0063) into the cavity area. Place the relay, contact side down, in a dust-free area and allow it to cure for 24 hours before using.

c. Clean the printed circuit board where the relays sit with isopropyl alcohol ("2-Propanol" P/N 8500-0755). Apply the alcohol with a soft brush (P/N 8520-0007). Avoid circular brush strokes and maintain a minimum amount of application pressure. Avoid using anything else (such as erasers) on the board. Blow dry the board and store in a dust-free area until the relays are ready to be reattached.

d. When the relays have cure dried, reattach them to the board. Check to insure that the relays are functioning properly by following the procedures described in the troubleshooting section.

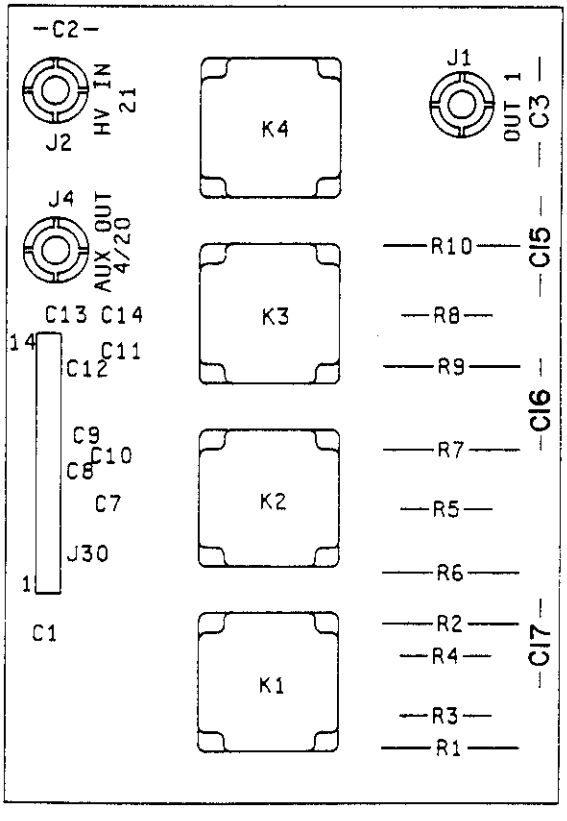

A23
03325-66523
Rev B

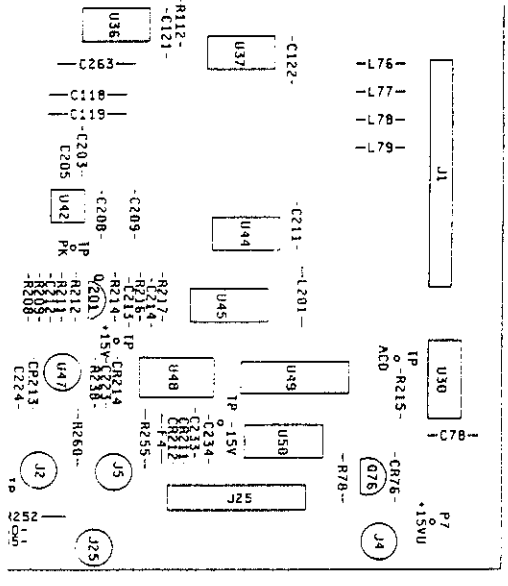

A14
03325-66514
Rev C

Fig 8-45
sht 2 of 3

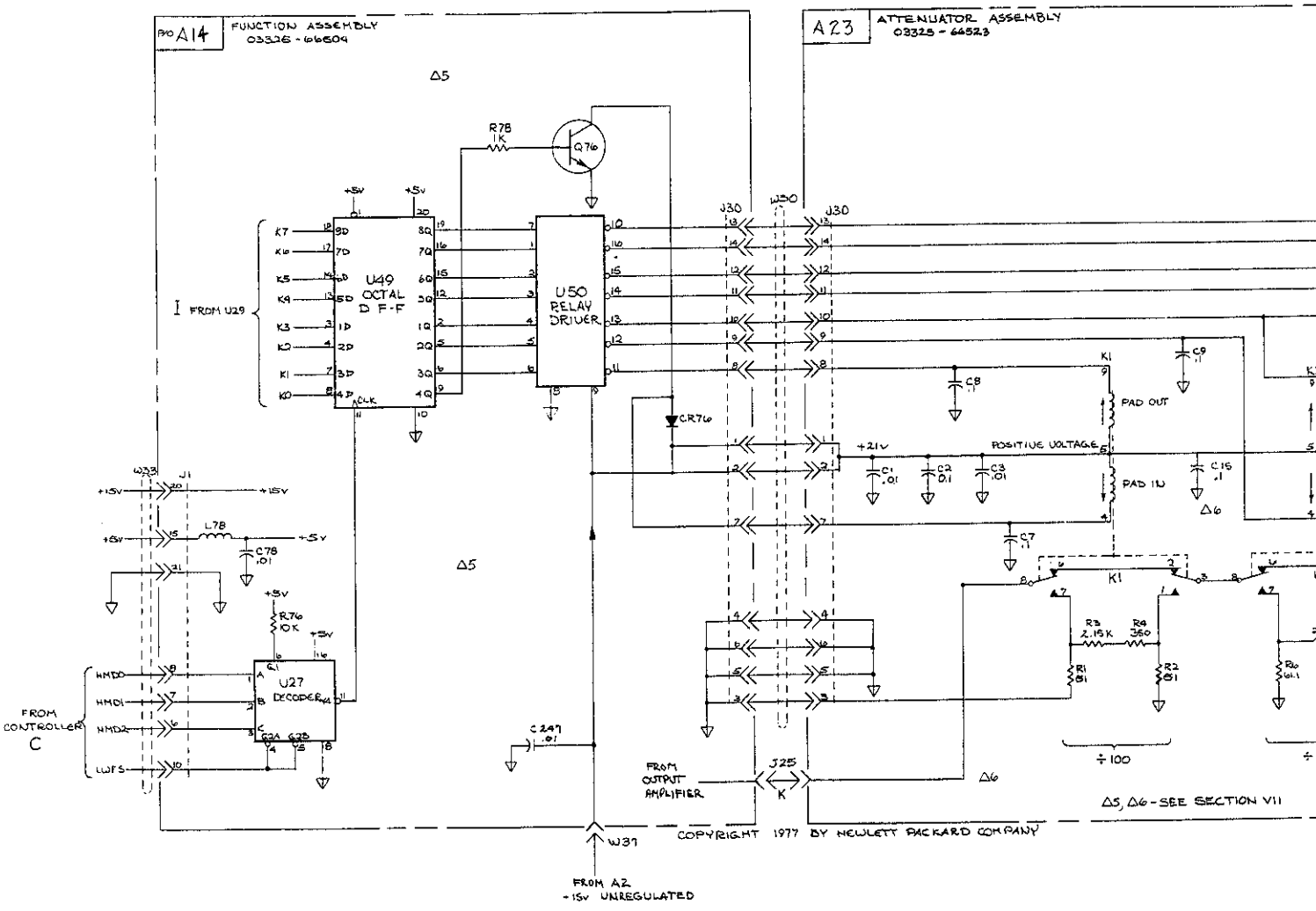

Fig 8-45
Sht 3 of 3

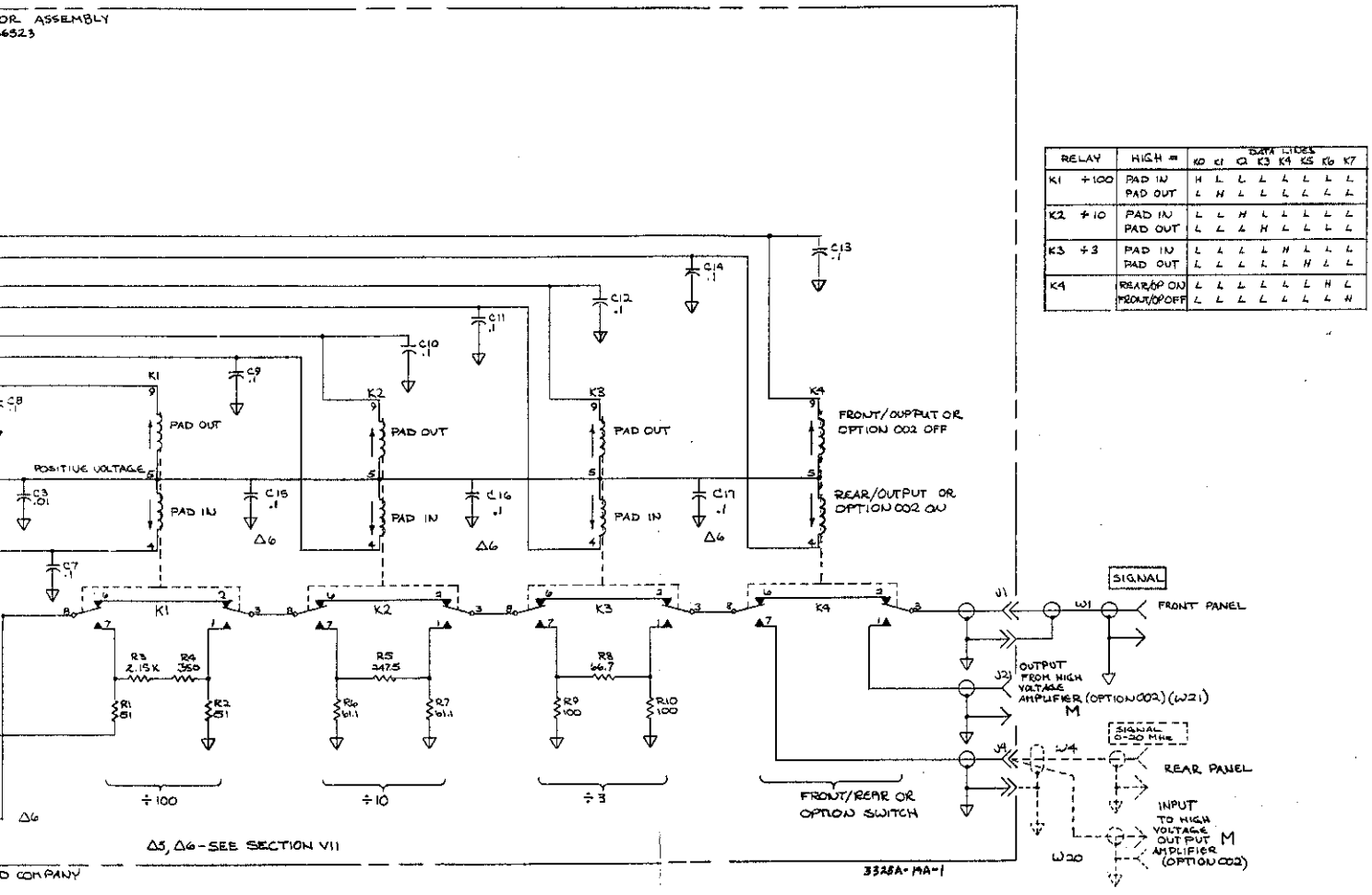

Figure 8-45. Relay Drivers, A14, and Attenuator, A23.

SERVICE GROUP M - OPTIONS: HIGH VOLTAGE OUTPUT (OPT. 002) AND HIGH STABILITY REFERENCE (OPT. 001).

High Voltage Output Amplifier Troubleshooting.

Before servicing the A8 assembly, be sure that it is being used within its limits of operation:

Frequency Range: 0 - 1MHz
Output Load: 500Ω minimum

If the standard output is normal but there is no high voltage output, move the small shorting connector marked AMP IN (on A14) from the NORM position to the opposite position. Measure the dc voltage at A8TP5 and at both ends of A8F1. This voltage should be approximately +15 V.

If voltage is present at only one end of A8F1, replace the fuse (.25 A, -hp- Part No. 2110-0343).

If the fuse is good, return the shorting connector to the NORM position. Disconnect the cable (marked 20 HI V1) from A8J20. Measure dc voltages with the circuit as shown on the schematic. Voltages should be within ±10%.

Check that jumper A6W1 is clipped or missing. The absence of this jumper indicates to the processor that the High Voltage option is installed and the processor will then allow voltages greater than 10Vp-p to be programmmed.

Note that the A8 assembly has its own +30V power supply.

Be sure to reconnect the cable to U8J20 after troubleshooting.

REAR PANEL OUTPUT WITH OPTION 002.

Normally, instruments having the High Voltage Output Option 002 are shipped from the factory with the signal output at the front panel. The signal output can be changed to the rear panel by reconnecting Cables 1 and 4.

a. Disconnect Cable 1 (to the front panel signal output) from the attenuator assembly J1 OUT.

b. Disconnect Cable 4 (to rear panel signal output) from the connector on A14 labeled "4 DUMMY", and connect it to J1 OUT on the attenuator assembly. It may be necessary to cut a cable tie to reach J1.

c. Connect Cable 1 to the "4 DUMMY" connector.

d. The standard and high voltage outputs will now appear at the rear panel SIGNAL connector.

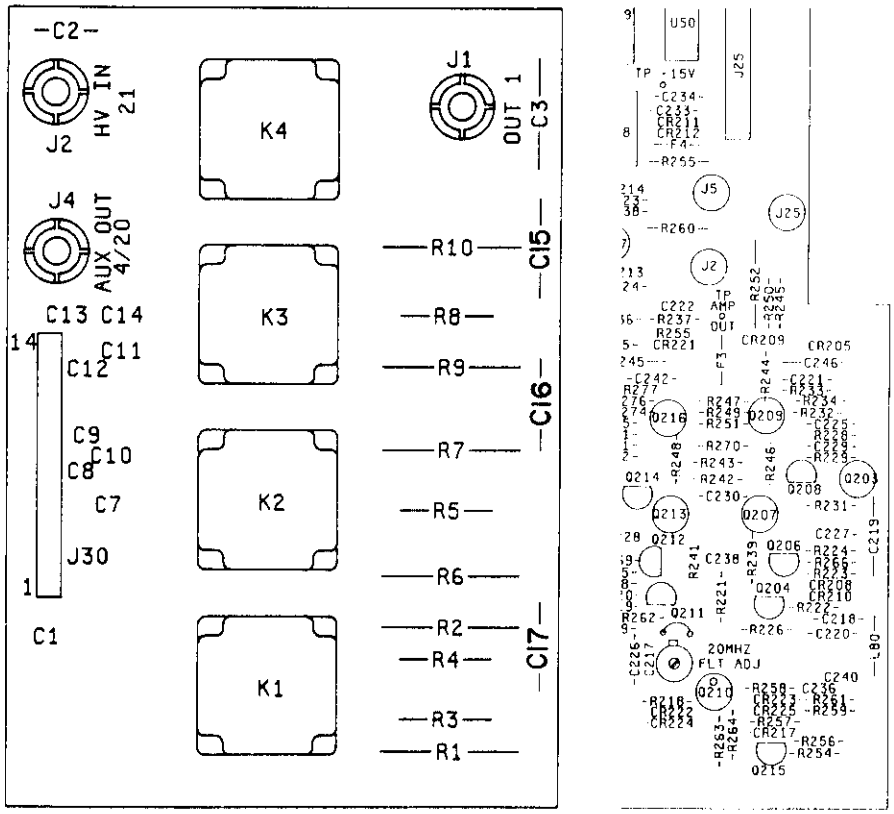

CHANGING OPTION 002 TO STANDARD (FRONT/REAR) OUTPUT.

Use the following procedure to change an instrument with High Voltage Output Option 002 to the standard instrument Front/Rear signal output configuration. The High Voltage output will then not be available at either the front or rear panel.

a. Disconnect Cable 20 from the attenuator assembly connector labeled "AUX OUT 4/20".

b. Disconnect Cable 21 from the attenuator assembly connector labeled "HV IN".

c. Disconnect Cable 4 from the connector on A6 labeled "4 DUMMY" and connect it to the attenuator assembly connector labeled "AUX OUT 4/20".

d. Connect Cable 20 to the "4 DUMMY" connector.

e. Secure Cable 21 in a position that does not allow the connector to touch the printed circuit board or any component.

f. Solder a small wire jumper in the position on A6 that is between A6U43 and A6S1. This jumper is marked W1 on the schematic diagram and the component location drawing in Service Group C. When this jumper is in place, the logic circuits recognize the standard (no high voltage output) configuration.

g. Attach a tag or other identification to the front panel to indicate that the high voltage output has been disabled and that the standard signal output is available at the front or rear panel (switchable).

Fig 8-4L
Sht 1 of 3

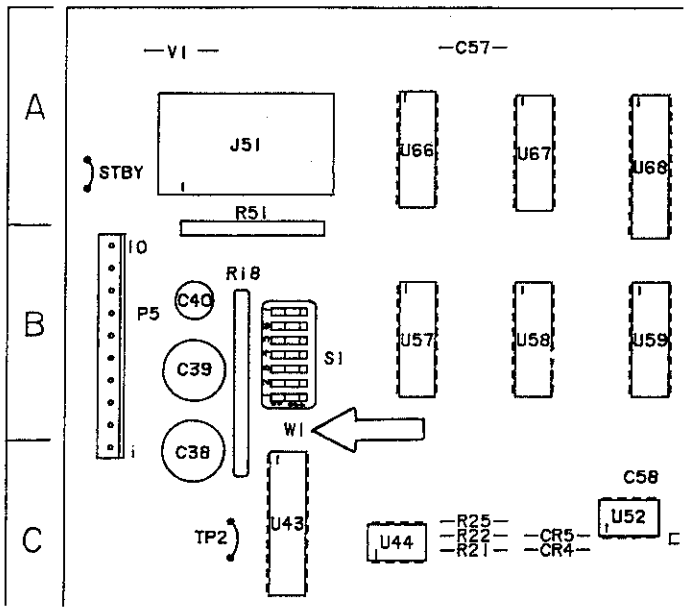

A2
03325-66502
Rev F

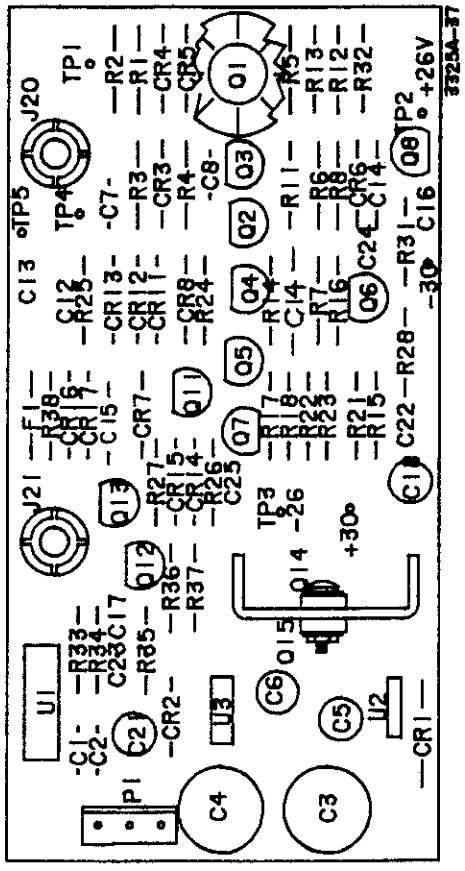

A8
03325-66508

Fig 8-46
Sht 2 of 3

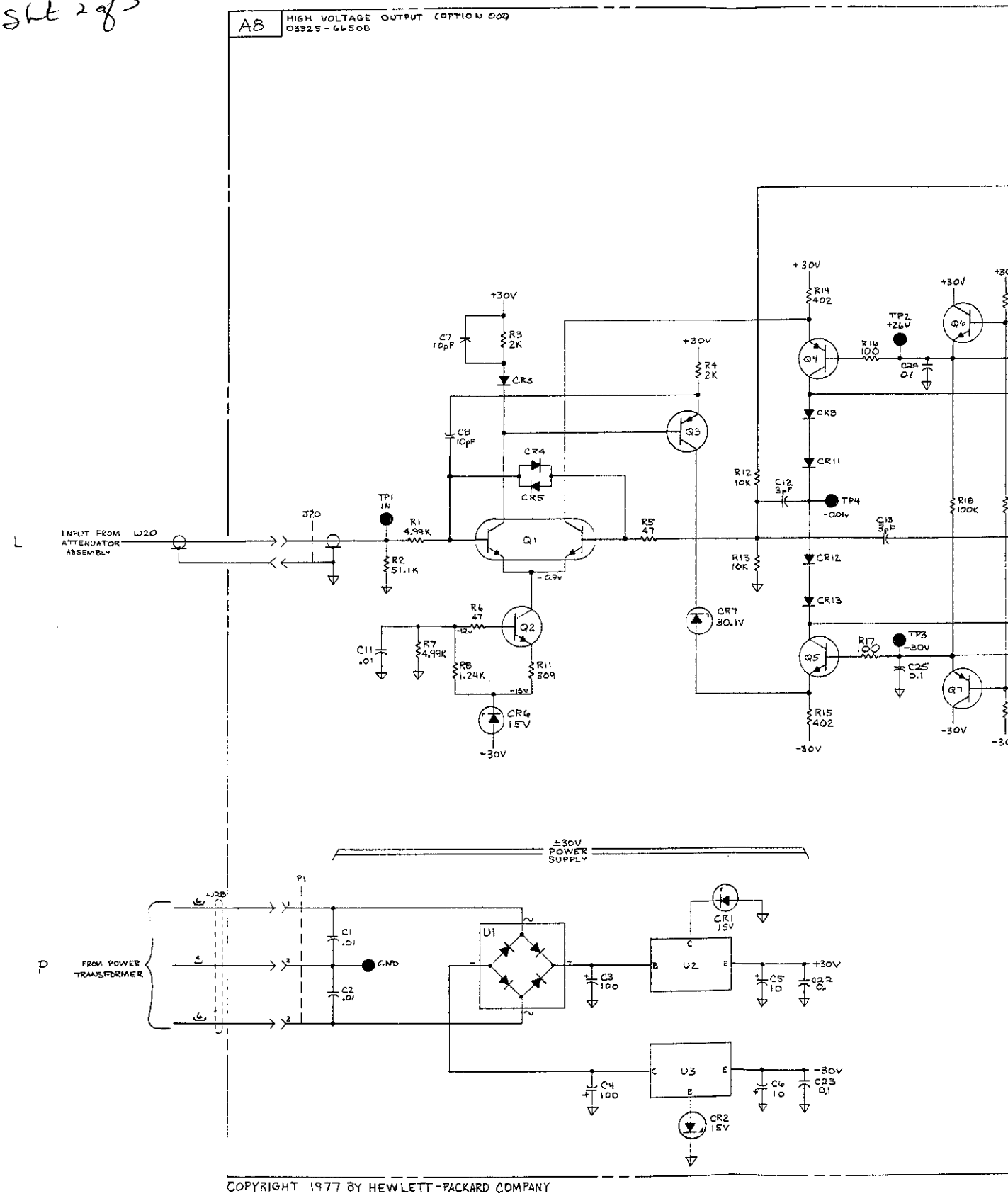

COPYRIGHT 1977 BY HEWLETT-PACKARD COMPANY

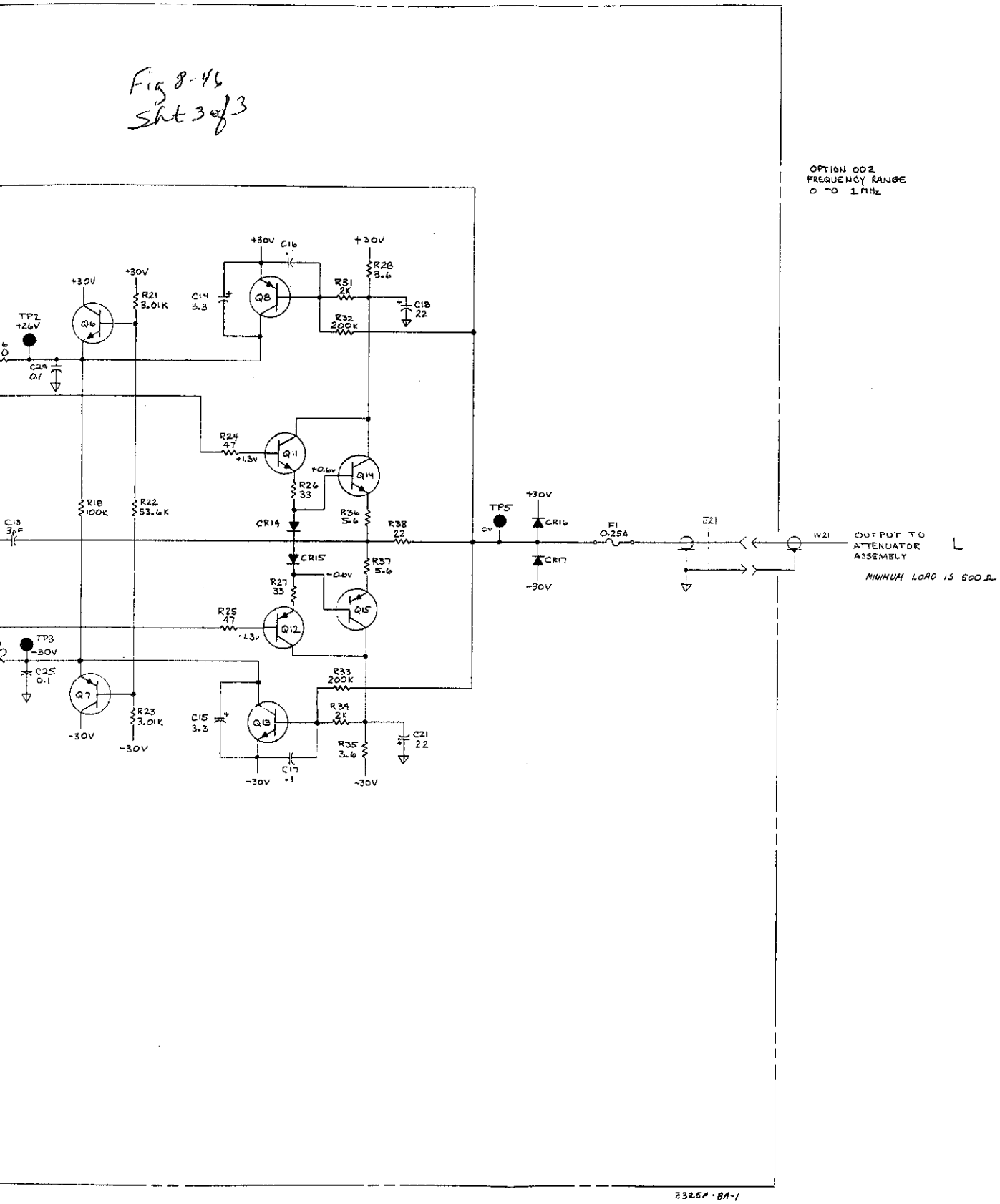

Figure 8-46. High Voltage Output Option 002, A8.
8-M-3/8-M-4

Fig 8-47
Sht 1 of 4

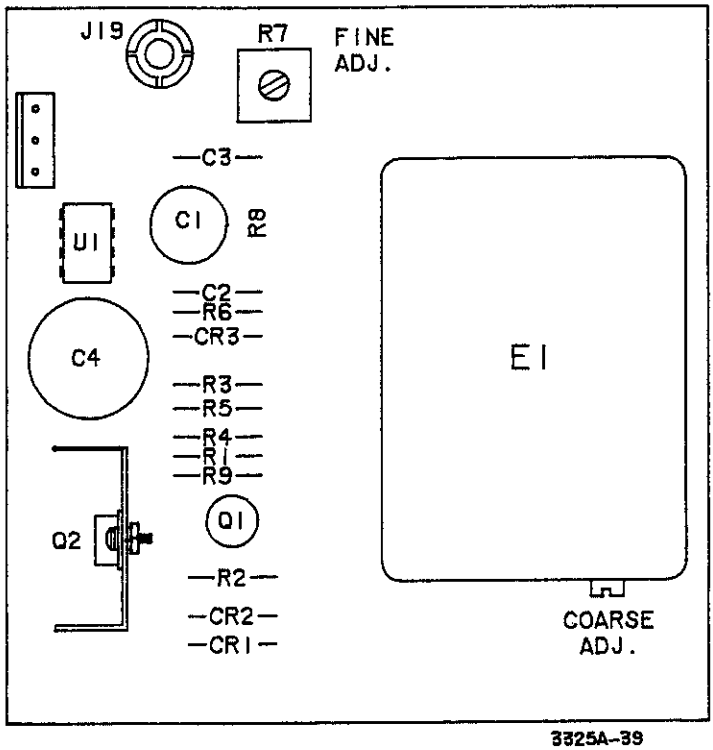

A9
03325-66509
Rev A

Fig 8-47
Sht 2 of 4

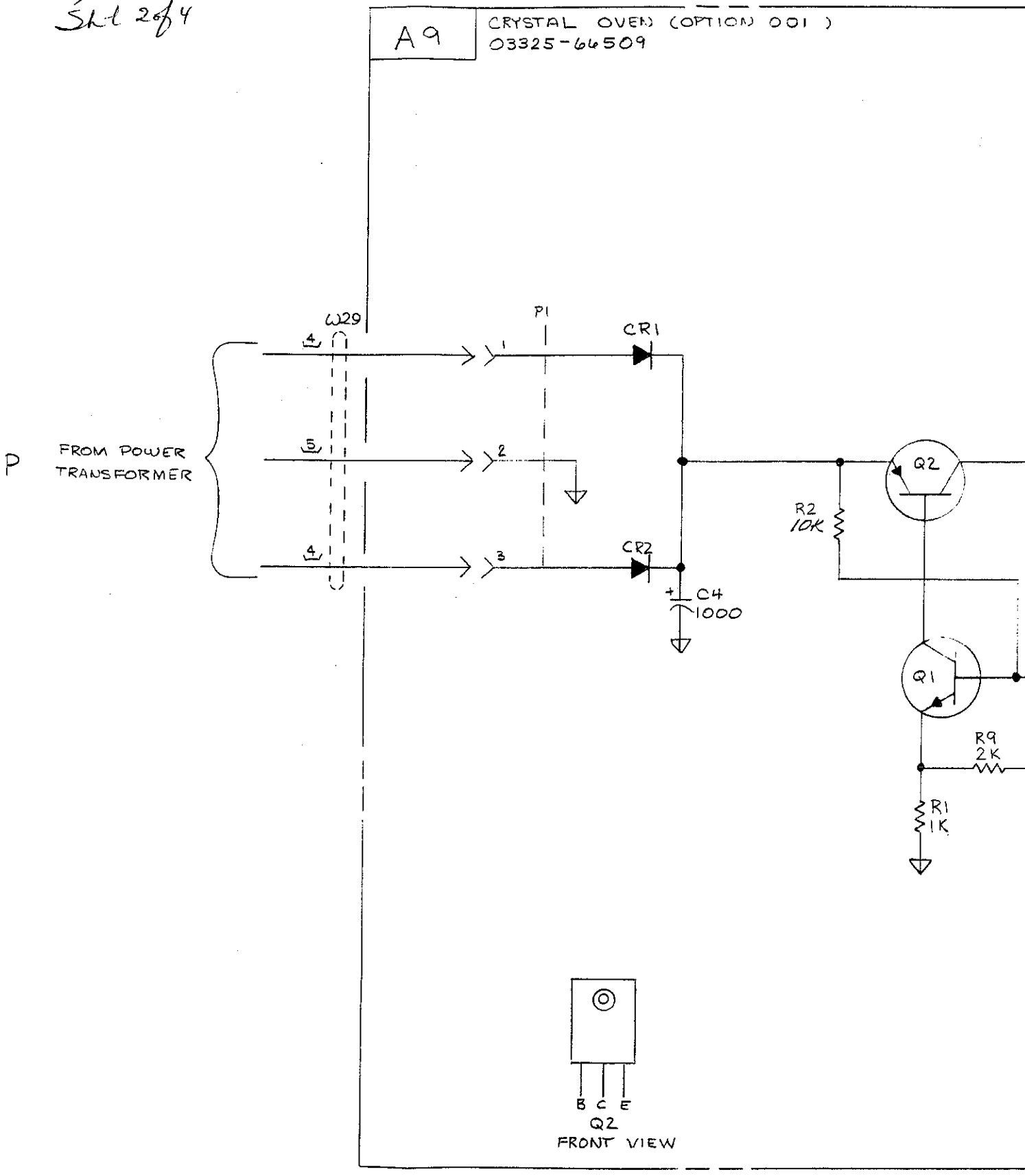

COPYRIGHT 1977 BY HEWLETT-PACKARD COMPANY

Fig 8-47
Sht 3 of 4

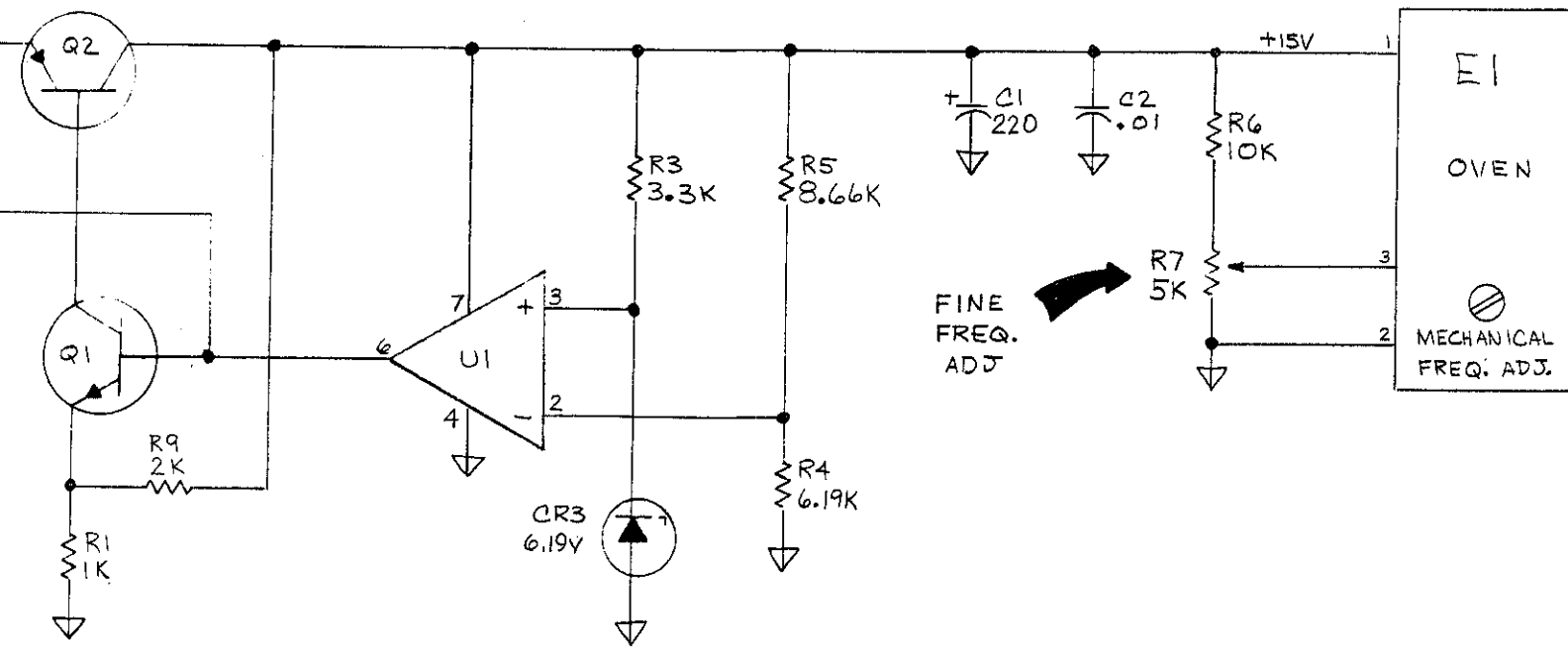

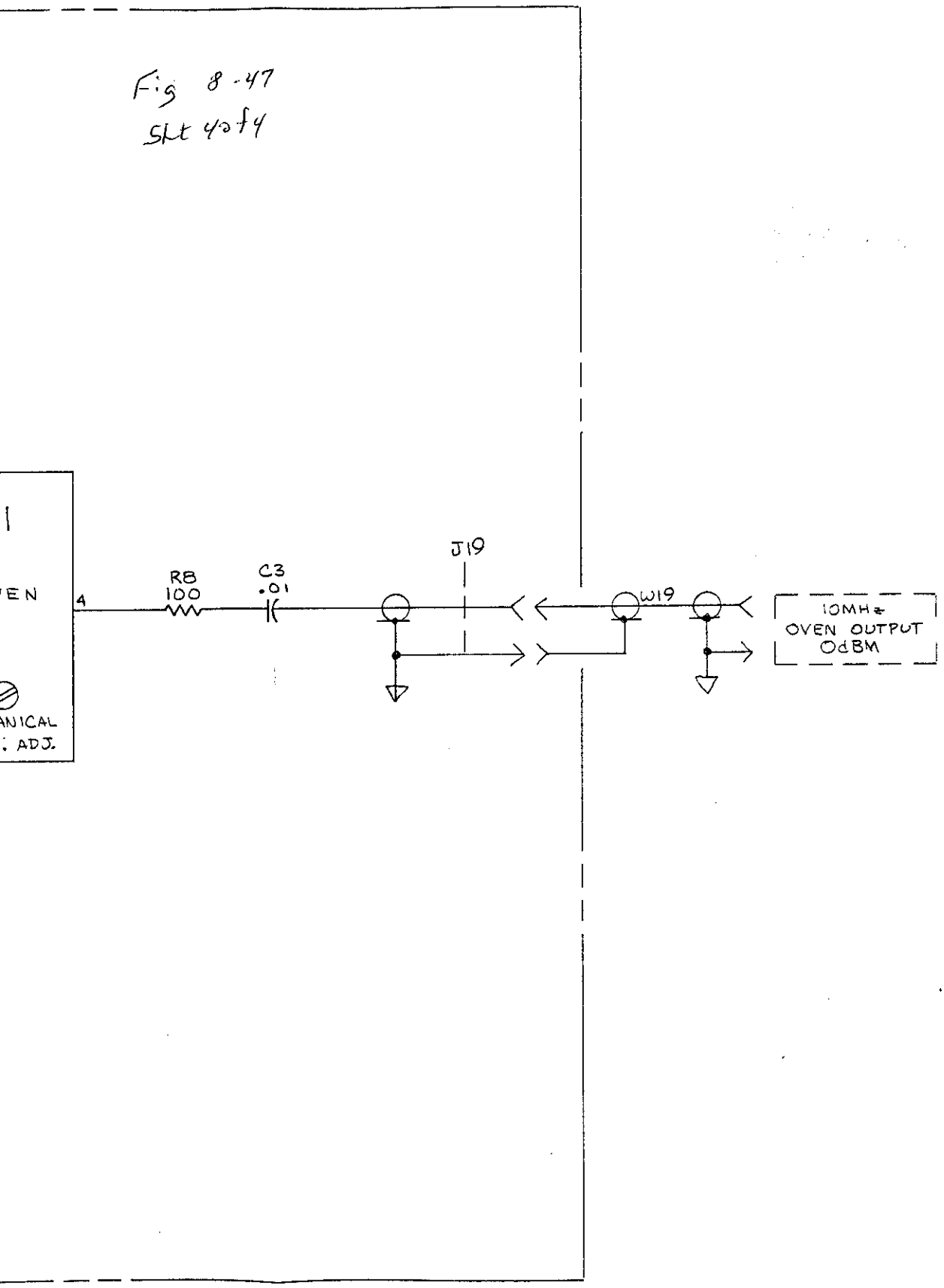

Figure 8-47. High Stability Reference Option 001, A9.
8-M-5/8-M-6

SERVICE GROUP N - SWEEP DRIVE CIRCUITS.

Troubleshooting The Sweep Drive Circuits.

To determine whether only one or both X Drive ranges are bad, monitor the X Drive output with an oscilloscope.

a. Set sweep time to .999 sec. Press START CONT key. X Drive output should go from 0 V to $> +10$ V during sweep up, and remain at 0 V during sweep down.

b. Set sweep time to 1 sec. The oscilloscope display should be as described in Step a.

c. Check the voltage at the XDR test point (on A14). This voltage should change from -10.0 V to -0.1 V when the sweep time is changed from 1 sec to .999 sec.

d. If neither output is correct in Steps a and b, first troubleshoot the X Drive Integrator circuit. The ramp reset pulse at the gate of A14Q1 should be as indicated on the schematic, with the negative-going edge of the pulse occurring at the end of a sweep up (in continuous sweep). Also check for the Ramp Reset pulse at A14U1 pin 12. If no pulse is present, go to the Logic troubleshooting, Service Group C.

e. Setting the sweep time to .999 sec checks Range 1, while a time of 1 sec checks Range 2. If only one range is inoperative, compare the voltage at U4 pin 4 (Range 1) or U3 pin 6 (Range 2) to the voltage at the XDR test point.

.999 sec = -0.1 V
1 sec = -10.0 V

If these voltages are correct, the Sweep Range Switches are working, and the trouble is probably in the X Drive Integrator.

f. If either of the voltages in Step e is not correct, check for the Range 1 level at U4 pin 2, or the Range 2 level at U3 pin 2 and 3. One of these should be TTL high and the other low, depending upon the range of the sweep time selected.

g. The Start output from the X Drive Start/Stop Flip-Flop should be high during a sweep up and low during sweep down. The L Start level at U2 pin 2 and U1 pin 15 should go low at the beginning of a sweep up and high just before the end of sweep up.

Z Blank Output.

With the 3325A in continuous sweep (linear mode) the Z Blank output should be at a TTL low level during sweep up, high during sweep down. Check for this signal at both ends of A14F1. If the fuse is bad, replace with -hp- P/N 2110-0343, 0.25A. The signal should be inverted at the base of Q3.

Marker Output.

The Marker output operates only during a linear sweep up. It is high at the start of a sweep up, goes low at the selected marker frequency, then high again at the stop frequency. Check for this signal at both ends of A14F2. If the fuse is bad, replace with -hp- Part No. 2110-0343, .25 A.

If the fuse is good, check for the presence of the Sweep Limit Flag at U2 pin 5, and the Marker Reset pulse at U2 pin 1. Both should be negative-going pulses. Sweep Limit Flag should occur at the selected marker frequency and at the end of sweep up. The Marker Reset pulse should occur immediately after the end of sweep up.

Fig 8-48
Sht 1 of 3

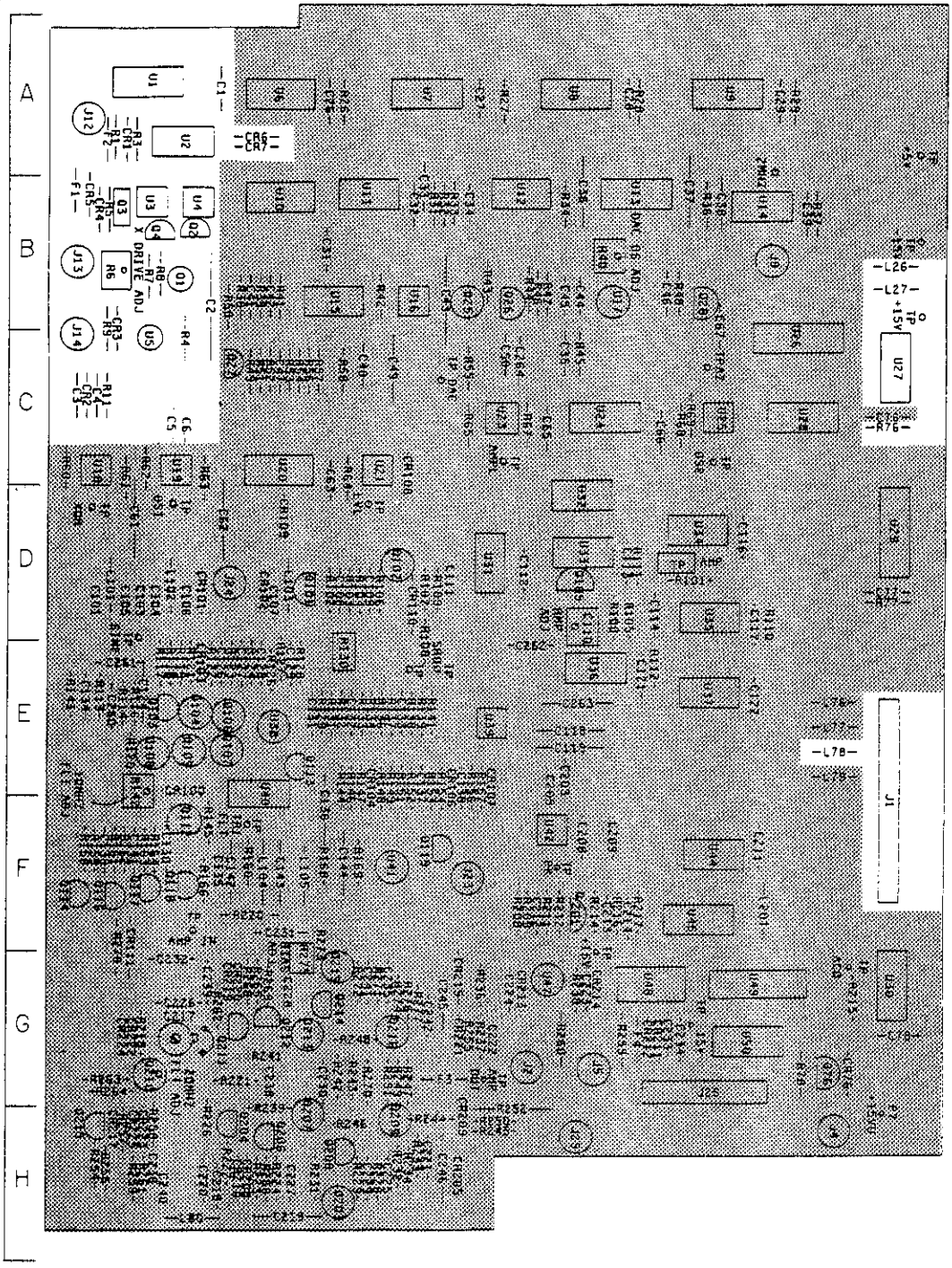

A14
03325-66514
Rev C

Fig 8-48
Sht 2 of 3

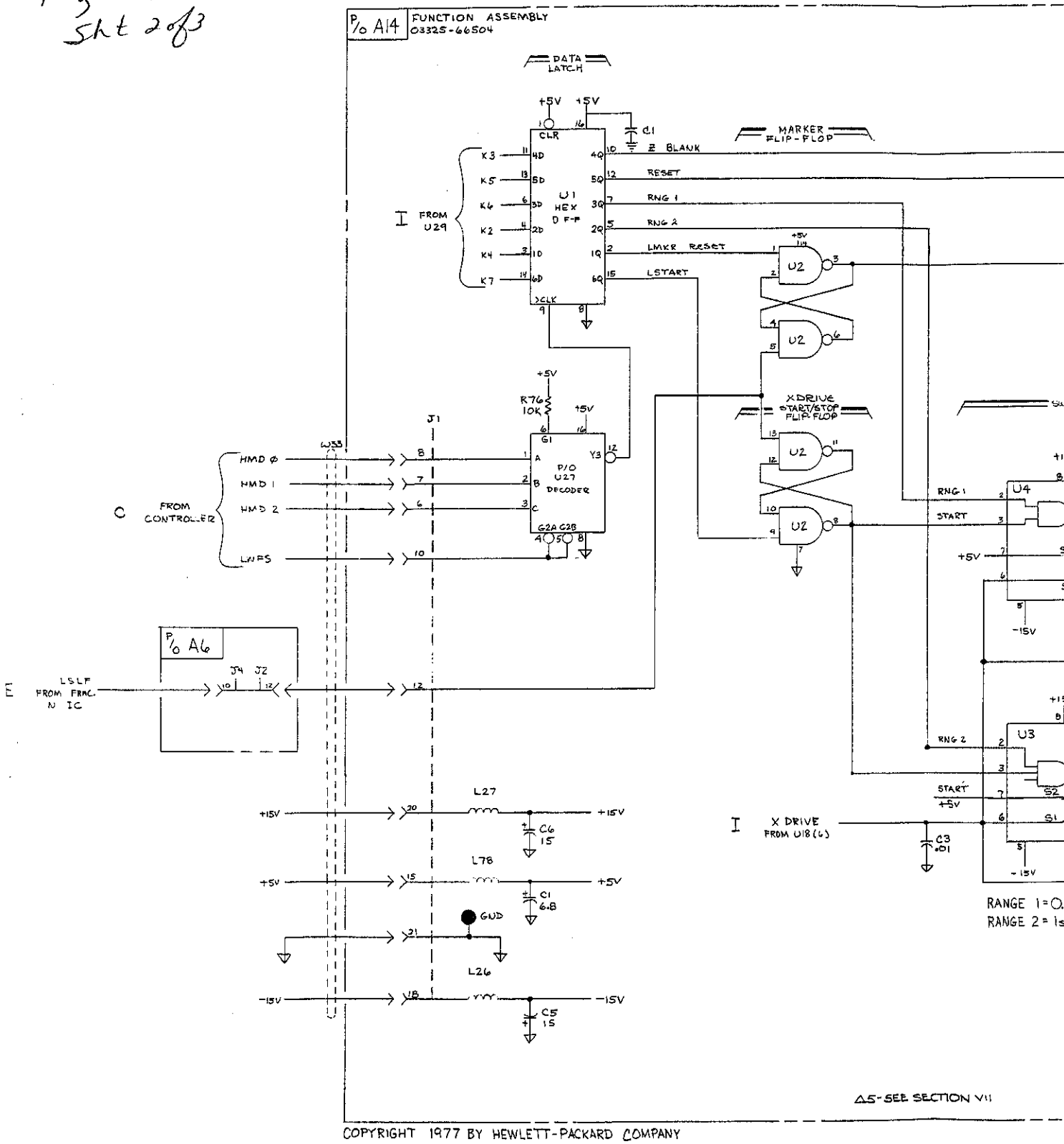

COPYRIGHT 1977 BY HEWLETT-PACKARD COMPANY

U4				Q2
INPUTS START	INPUTS RNG 1	ANALOG SWITCH S1	ANALOG SWITCH S2	
L	X	OPEN	CLOSED	OFF
X	L	OPEN	CLOSED	OFF
H	H	CLOSED	OPEN	ON

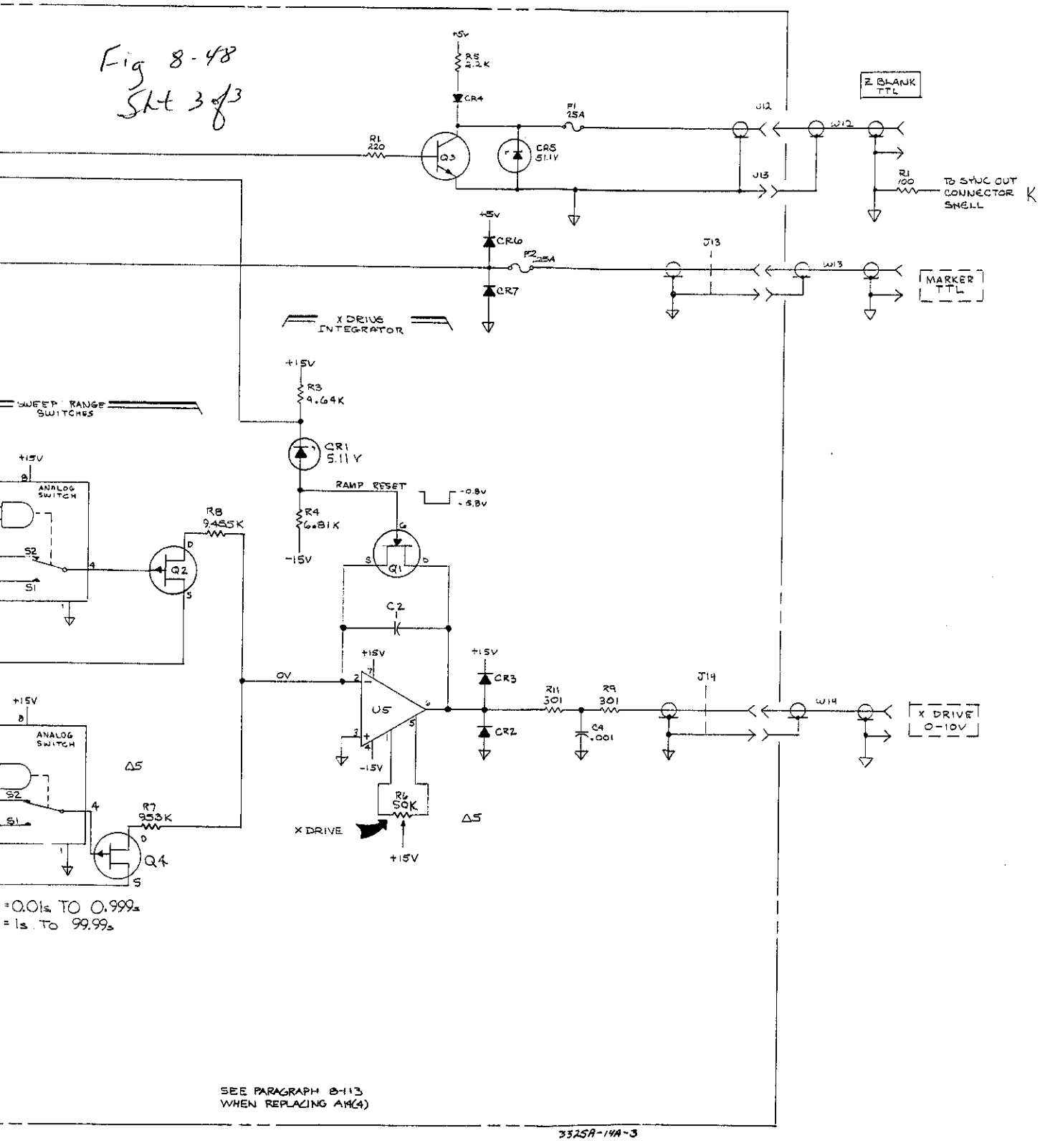

U3		
INPUTS RNGE	START	ANALOG SWITCH#
L	K	OPEN
X	L	OPEN
H	H	CLOSED

Figure 8-48. Sweep Drive Circuits, A4.
8-N-3/8-N-4

SERVICE GROUP 0 · POWER SUPPLIES.

Power Supply Troubleshooting.

CAUTION

The Power Supply printed circuit board mounting screws must be tightened securely or the regulators will not operate properly. The line fuse may be destroyed.

To determine if the trouble is in the regulators or if some other circuit is pulling down a power supply voltage, disconnect the cable (W22) from A2P5. This breaks the connector to the power switch; ground A2P5 pin 10 to enable the power supplies.

The three power supply voltages (±15V, +5V) are routed from A2P5 through the cable W22 to A6P5, and from A6 are connected to the other assemblies through the flat cables at the side of A6 and the gray or blue cable to the keyboard assembly. In addition to the flat cables, ±15V are routed to A14 through either a 2-wire cable which has a connector at each end, or through individual wires connecting to square pins at either end. When replacing either the 2-wire cable or the individual wires, make sure the connection is correct. The red wire goes to +15V and the black wire to -15V.

If the power supply voltages are not within ±1V of the correct value with the cable removed, troubleshoot the regulator circuits, using the dc voltages noted on the schematic. Note that all supplies are referenced to -15V. Therefore, if this supply is bad, the +5V and +15V supplies will be off as well.

If the power supply voltages are correct with the cable disconnected, disconnect all three of the flat cables and the cable to the keyboard assembly, and reconnect cable W22 to A2P5. Connect the STBY test point (on A6) to ground to enable the power supplies. If power supply voltages are again incorrect, the problem is on the A6 assembly (Service Groups B and C). If power supply voltages are correct with A6 connected and the other assemblies disconnected, replace the cables one at a time to locate the problem, then troubleshoot the appropriate assembly.

CAUTION

The flat cables must be removed and reinserted carefully to prevent damage. Make sure that the cable contacts are aligned properly with the connector contacts.

NOTES

1. When replacing Q1, Q2, or Q3, make sure the insulator is in place correctly. Use a heat transfer compound between the transistor, insulator, and heat sink. Be sure to use the proper length screw for replacement.

2. If the heat sink is removed from the side frame, be sure to use the proper length screws to replace it. If the screws are too long, or if the washer is omitted, the screws may short the transistors to the frame.

Designator	Board Location
C1	B
C2	B
C3	B
C4	B
C5	B
C6	C
C7	C
C8	C
C9	D
C10	F
C11	F
C12	E
C14	G
C15	G
C16	H
C17	H
C18	H
CR1	B
CR2	B
CR3	C
CR4	C
CR5	D
CR6	E
CR7	E
CR8	F
CR9	H
CR10	C
CR12	E
CR13	E
CR14	E
CR15	G
CR16	E
K1	H

Designator	Board Location
L1	E
P1	C
P2	D
P3	H
P4	H
P5	B
Q1	A
Q2	A
Q3	A
Q4	A
Q5	A
Q6	B
Q7	B
Q9	G
Q10	F
Q11	A
R1	A
R2	A
R3	A
R4	A
R5	A
R6	A
R7	A
R8	A
R9	A
R10	A
R11	B
R12	B
R13	E
R14	D
R15	C
R16	E

Designator	Board Location
R17	E
R18	F
R19	F
R20	F
R21	F
R22	G
R23	G
R24	G
R25	G
R26	G
R27	H
R28	H
R29	H
R30	B
R32	A
R33	F
S1	D
S2	E
Test Points	
GND	G
+15 V	G
+5 V	G
−15 V	F
+15 U	C
+5 U	A
−15 U	B
U1	B
U2	F
U3	F
U4	G
V1	G

Fig 8-49
Sht 1 of 3

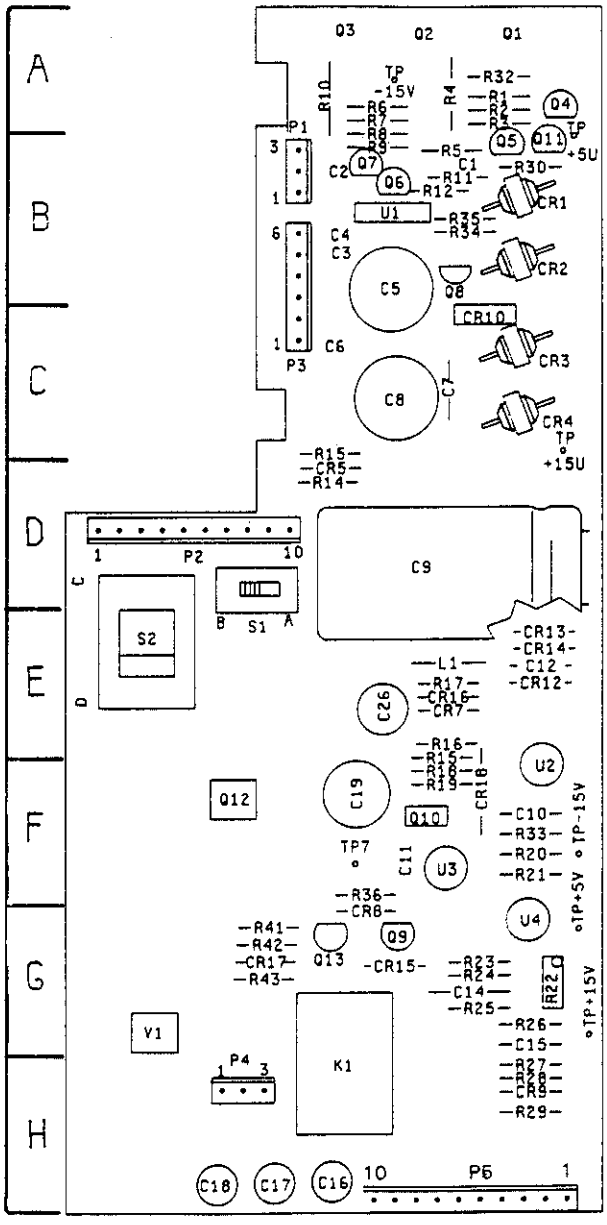

A2
03325-66502
Rev F

Fig 8-49
Sht 2 of 3

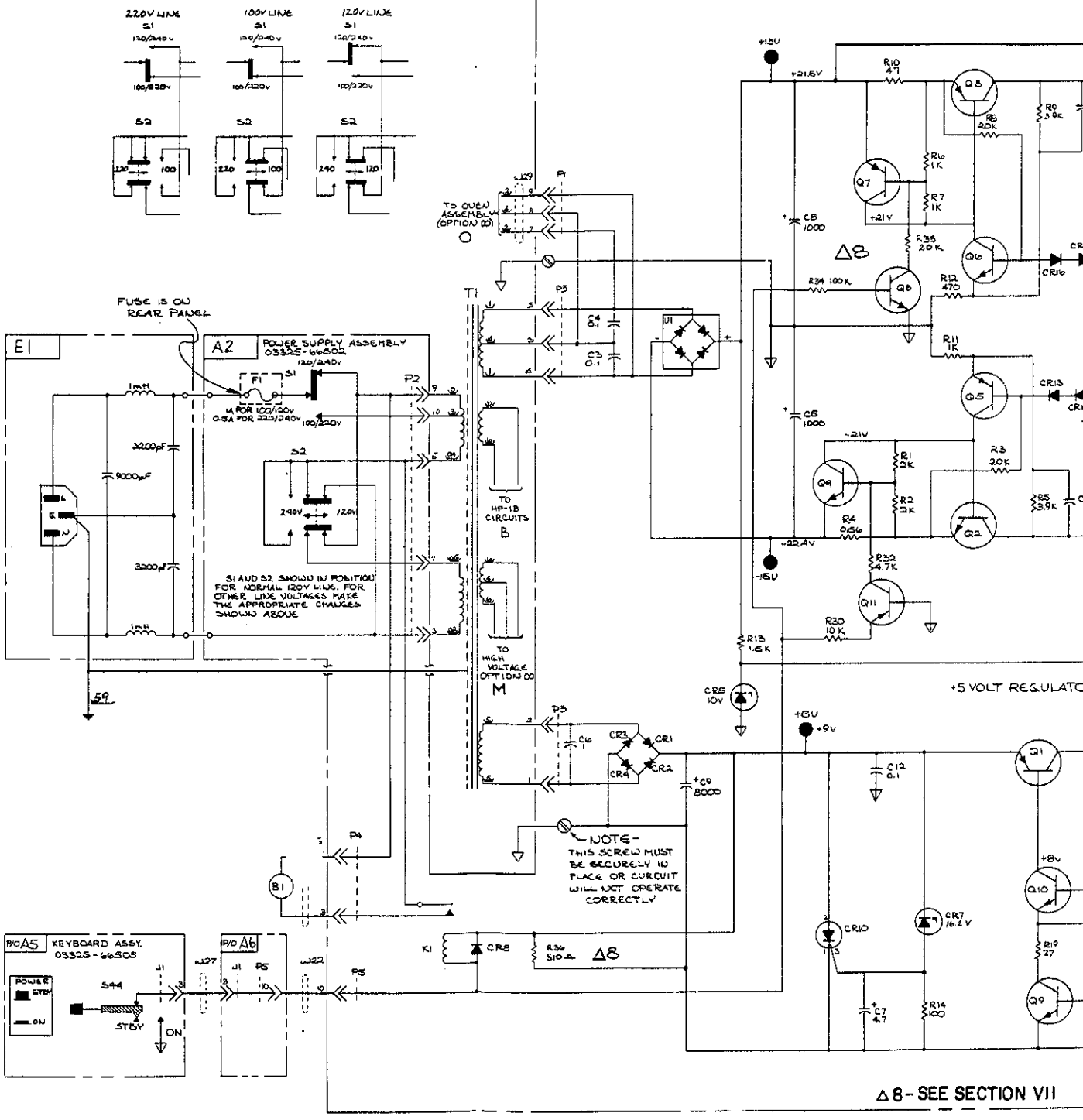

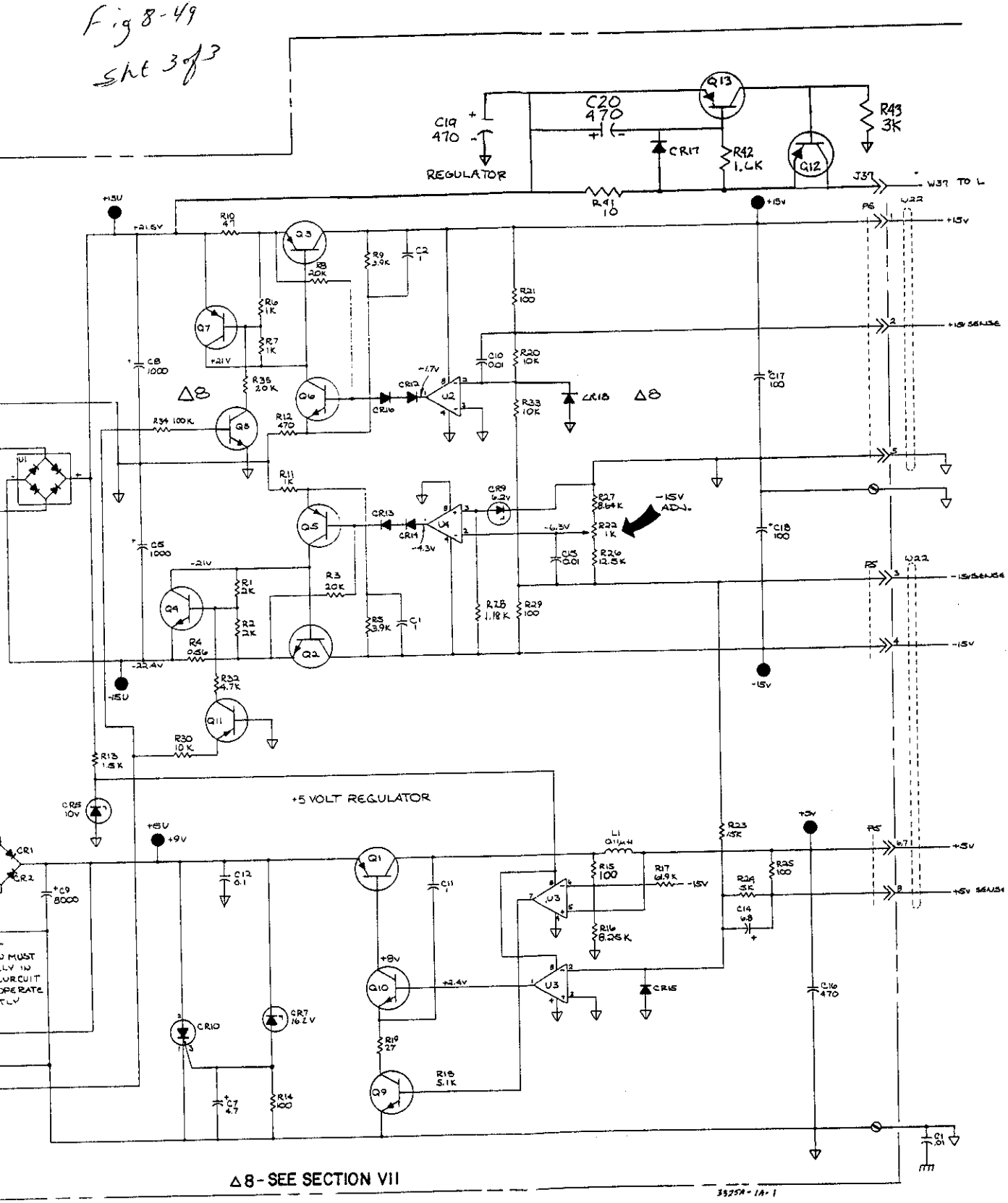

Figure 8-49. Power Supplies, A2.
8-O-3/8-O-4

Fig 8-50
Sht 1 of 4

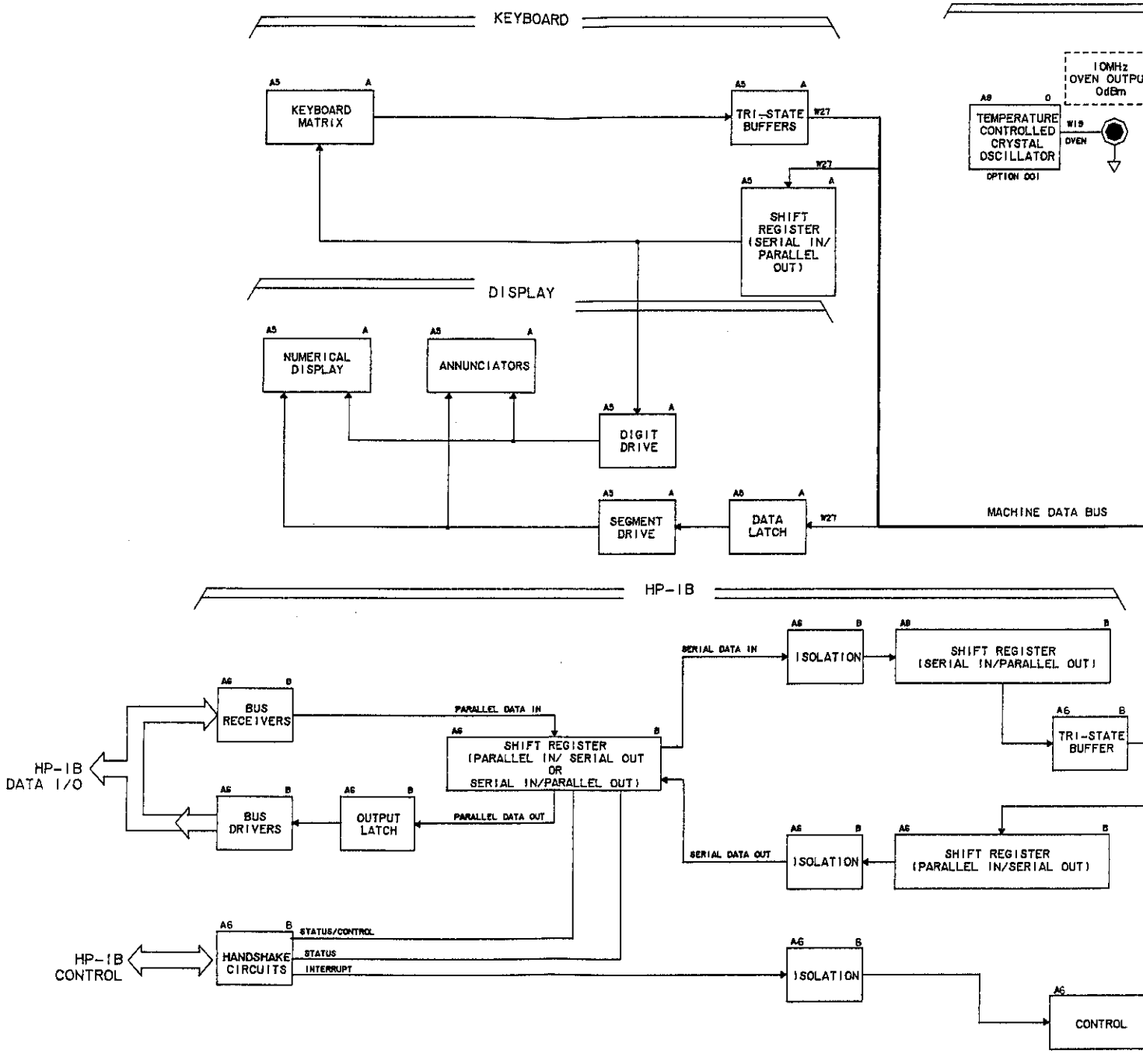

Fig 8-50
Sht 2 of 4

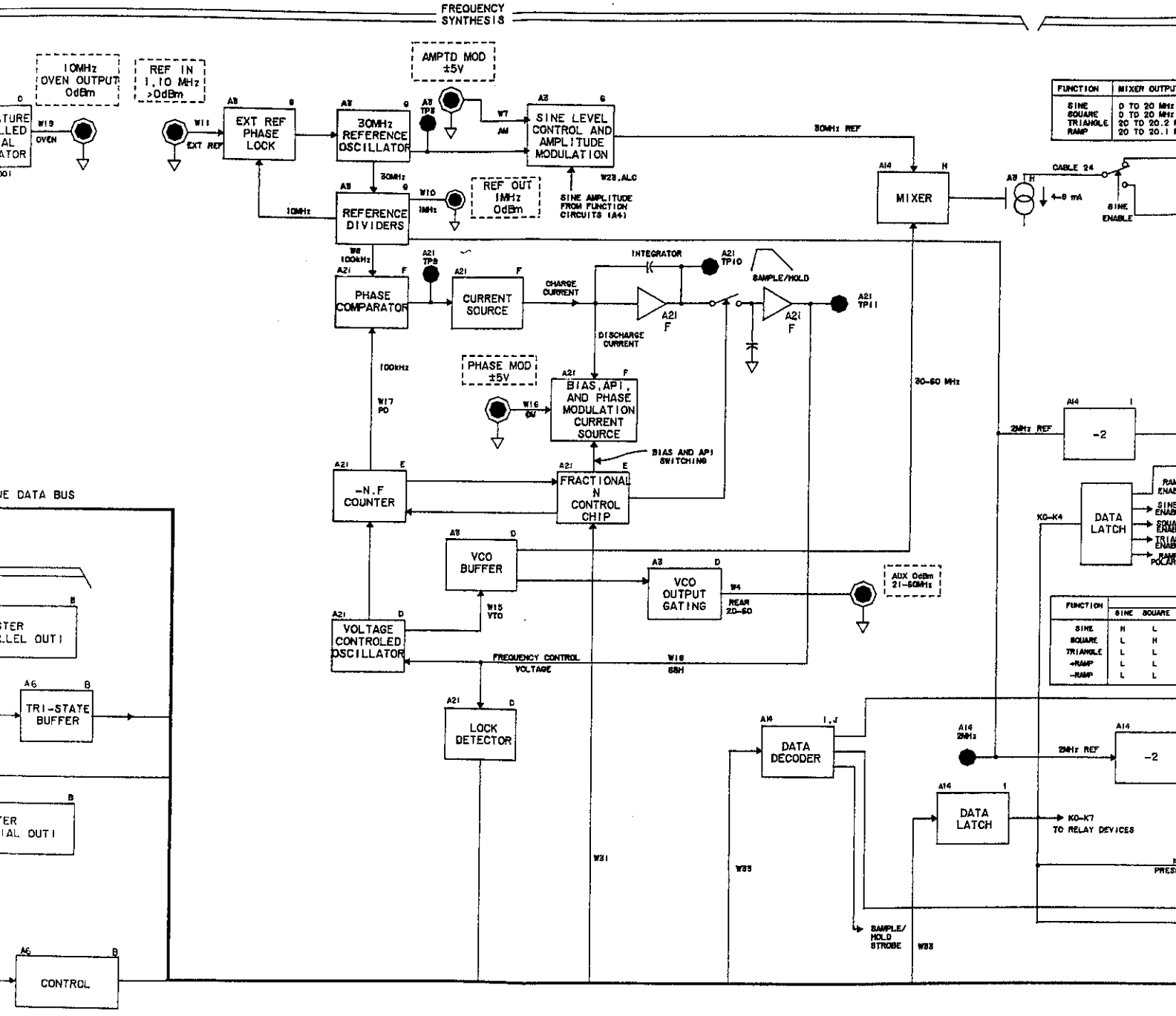

Fig 8-50
Sht 3 of 4

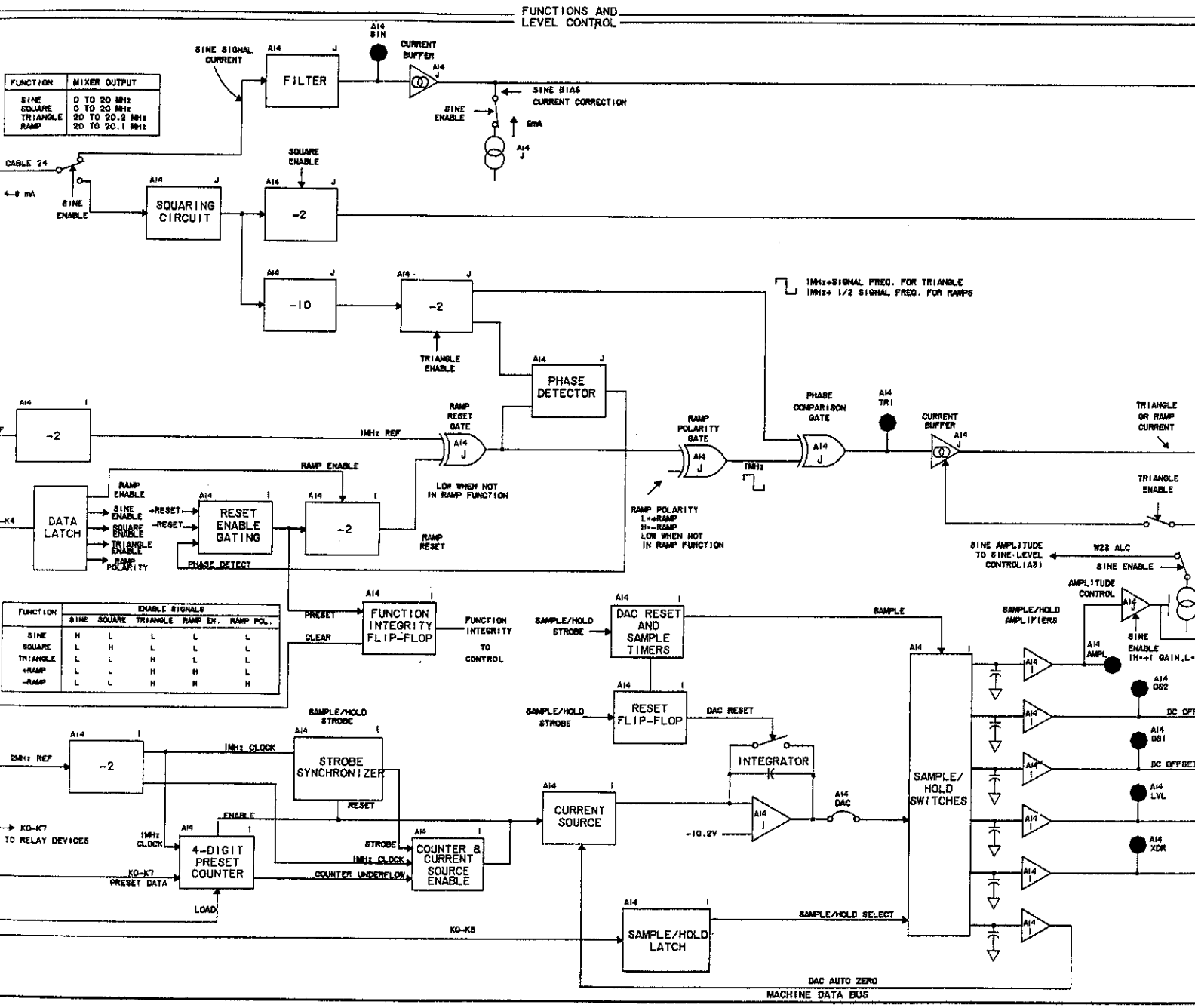

Fig 8-50
Sht 4 of 4

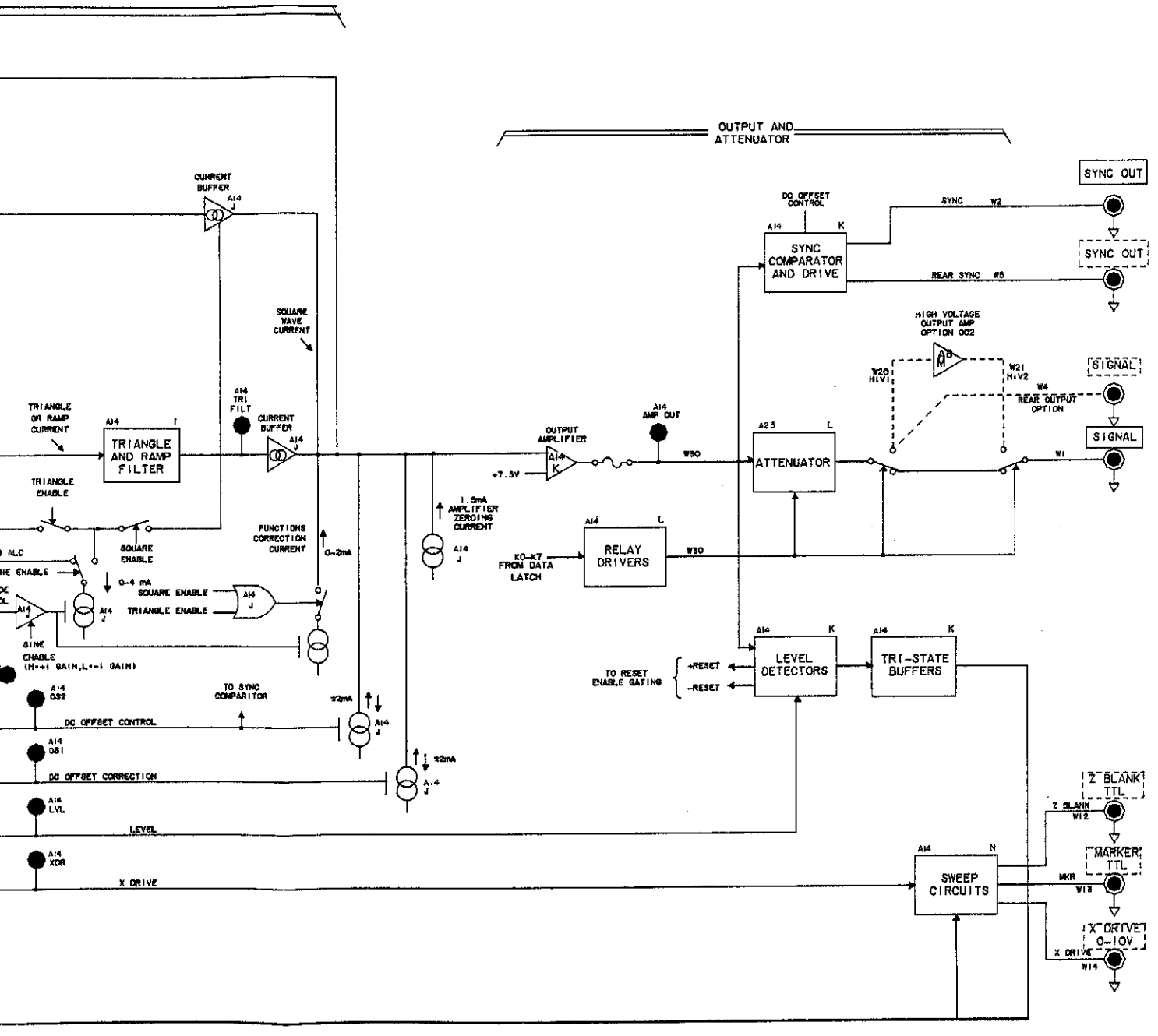

Figure 8-50. Function Block Diagram.
8-P-1/8-P-2