ASHCROFT®
Trust the shield.®

ATE-2 Handheld Calibrator

FEATURES

- Monitor up to 3 parameters at once: pressure, temperature, voltage or current
- Built in data logging up to 16,000 records
- SD memory card slot for additional data log storage
- USB Communications interface
- IP65/NEMA 4X for all weather functionality
- Interchangeable pressure module to measure from 0.25 in. H_2O up to 10,000 psi

ATE-2
Hand Held Calibrator

SPECIFICATIONS

Sensor Inputs:	Two Interchangeable pressure and temperature module bays, banana jack inputs for DC voltage or current monitoring
Pressure Modules:	Pressure ranges from 0.25 in. H_2O up to 10,000 psi Accuracy from ±0.025% to ±0.1% of span Hot Swap capable.
LCD Display:	2.5″ (W) x 1.5″ (H) displays 3 simultaneous measurements, back light, flip screen capability
Electrical Connection:	4mm banana jacks – 1 set of test leads included
Loop Power Supply:	24 Vdc-35 mA maximum (non I.S. only)
Available Engineering Units:	psi, in. H_2O, in. Hg, ft SW, bar, mbar, kPa, MPa, mm Hg, cm H_2O, mm H_2O, kg/cm^2, user programmable
Operating Temp. Range:	-4 °F to 120 °F (-20 °C to 49 °C)
Storage Temperature:	-4 °F to 158 °F (-20 °C to 70 °C)
Update Rate:	100 ms – 1 module installed 200 ms – 2 modules installed 300 ms – 2 modules installed and external input
Resolution:	±0.001% span; 99,999 counts
Electrical Measurements:	0-20 mA or 0-30 Vdc
Accuracy:	Input / Volts / Accuracy 0/10 Vdc ±0.025% fs 10/30 Vdc ±0.10% fs 0-20 mA ±0.03% fs
Warm-Up Time:	5 minutes for rated accuracy
Programmable Filtering (Damping):	Levels 1 through 16
Temperature Effect Electrical Measurement:	±0.001% of span per °F over compensated range from reference temperature of 70 °F (±3 °F)
Serial Interface:	USB (Micro-B connector type)
Field Calibration:	Base Unit and pressure modules may be field-calibrated via keypad commands
Data Logging:	• Internal storage for up to 64 data logs and up to 16,000 records; transferable to SD card • Manual/automatic data logging capability • Programmable data intervals (0.1 sec. to 24 hrs.)

Power Requirements:	(4) AA Batteries or via USB power supply or USB universal AC adapter 100-240 Vac, 50/60 Hz included
Battery Life:	Up to 40 hours battery with 2 modules installed
Certification:	NIST traceable certification document provided for base unit and Quick-Select™ sensor modules
Agency Approvals:	CE, FCC (CFR47), UL 61010-1
Dimensions:	8.7″, (L) X 5.1″, (W) X 3.8″, (H)
Unit Weight:	2.4 lb (no modules)
Case Materials:	High Impact PC-ABS
Enclosure:	IP65/NEMA 4X

OPTIONAL APPROVALS

Hazardous Location Version (Battery Powered Only):
Note: Loop power supply is not included with Intrinsically Safe Units

FM Intrinsic Safety
CL 1, Div 1, Gr A, B, C, D
CSA Intrinsic Safety
CL 1, Div 1, Gr A, B, C, D
ATEX Ex ia ii c T4 Ga –20°C<Ta<50°C

ORDERING CODE

P/N:	Description	Version
ATE 2ST	Ashcroft base unit	Standard
ATE 2IS	Ashcroft base unit	Intrinsically safe

All specifications are subject to change without notice.
All sales subject to standard terms and conditions.
©2022 Ashcroft Inc., ate-2_calibrator_ds_RevE_05-13-22

heise.com
info@heise.com
1.800.328.8258

ATE-2 Handheld Calibrator

STANDARD FUNCTIONS

- **Data logging** allows the user to save pressure, temperature and or electronic values displayed on the LCD to internal memory. Internal memory can hold up to 64 data log files and a total of up to 16,000 individual records. Manual logging is initiated with a single key press. Automatic data logging can be programmed to collect data at timed intervals between 0.1 second and 24 hours.

- **SD Memory Card Slot** gives the ATE-2 additional data storage capability limited only by the capacity of the SD card installed. Data logs stored on the SD card are saved in .csv format which can be read by most spreadsheet programs. Data can easily be transferred from the ATE-2 to a PC.

- **Loop Power Supply** is a standard feature on non-I.S. units and allows the user to conveniently power the device under test with 24 Vdc up to 35 mA

- **Percent Error Function** can be used when calibrating pressure transducers. Calculations are performed by the ATE-2 eliminating potential for human errors. This function enables the user to program the full scale range and electrical output of the transducer under test, and will display the actual pressure and electrical output readings as well as a percentage value comparing the actual output to the theoretical output.

- **Switch Test Function** allows the operator to calibrate and document the pressure switch function. The onboard display will show pressure switch trip point, reset point and will calculate switch deadband. All calculations are performed by the ATE-2 eliminating potential for human errors

- **Dual Mode Function** allows the operator to add or subtract the measured pressure values from two installed Quick-Select™ pressure modules. This allows for measurement of “high-line” or elevated static differential pressures. This feature also offers the ability to add barometric pressure from an absolute pressure module to the measured pressure from a gauge pressure module, giving the user the ability to measure a variety of absolute pressures without using designated modules.

- **Leak Detect** the HHC provides the ability to detect and quantify leaks in terms of pressure decay over time. In the pressure decay over time mode the HHC will monitor the desired pressure vessel for the programmed time interval and, at the end of the monitoring time period, display the measured change in pressure.

ATE-2
Hand Held Calibrator

AM2-2
Pressure Module

AM2-1
Pressure Module

All specifications are subject to change without notice.
All sales subject to standard terms and conditions.
©2022 Ashcroft Inc., ate-2_calibrator_ds_RevE_05-13-22

heise.com
info@heise.com
1.800.328.8258

ASHCROFT®
Trust the shield.®

HM2-1, HM2-2 Pressure Modules

FEATURES

- Low pressure modules ranges from 0.25 in. H_2O (IWC) to 200 in. H_2O (IWC), accuracy ±0.1% to ±0.06% of span, variable capacitance sensor, for use with clean dry gas media
- Medium/high pressure modules 5 to 10,000 psi, accuracy ±0.1% to ±0.025% of span, 316 SS isolated sensor, for use with media compatible with 316 SS
- Gauge, absolute, differential and compound ranges available
- Temperature compensated 20°F to 120°F

AM2-1
Pressure Module

AM2-2
Pressure Module

PRODUCT SPECIFICATIONS:

AM2-1 Low Pressure Modules:

Pressure Types:	Differential and compound
Available Ranges:	Refer to range table
Available Accuracies:	±0.06% of span (0/1-0/200 in. H_20) ±0.07% of span (0/0.25-0/0.5 in. H_20) ±0.1% of span
Compensated Temperature Range:	20 °F to 120 °F (–7 °C to 49 °C)
Temperature Effect:	±0.004% of span per °F over compensated range from reference temperature range of 70 °F (±3 degrees)
Repeatability:	±0.01% of span (range 0/1 in. H_20 or higher) ±0.02% of span (range below 1.0 in. H_20)
Sensitivity:	±0.002% of span (typical)
Under / Overpressure Capability:	–15 to 50 psi
Maximum Static (line) Pressure:	100 psi
Process Connection:	⅛ NPT Female (STD.)
Media Compatibility:	Clean, dry, non-conductive, non-corrosive gas
Agency Approvals:	FCC (CFR47), UL61010-1, Not RoHS compliant

PRODUCT SPECIFICATIONS:

AM2-2 Medium High Pressure Modules:

Pressure Types:	Gauge, absolute, compound and vacuum
Available Ranges:	Refer to range table
Available Accuracies:	±0.025%, ±0.05% or ±0.1% of span (10,000 psi only offered in psig and ±0.1% accuracy)
Compensated Temperature Range:	20 °F to 120 °F (–7 °C to 49 °C)
Temperature Effect:	**Standard:** ±0.004% of span per °F over compensated range from reference temperature range of 70 °F (±3 degrees) **Optional:** Enhanced Accuracy Option. No additional error due to ambient temperature from 20 °F to 120 °F
Sensitivity:	±0.002% of span (typical), ±0.001 of span (max)
Repeatability:	±0.01% of span
Overpressure Compatibility:	200% for ranges to ≤ 1,000 psi 150% for ranges > 1,000 psi
Process Connection:	⅛ NPT Female (STD.) Optional pressure connections, ⅛ NPT Female NPT with flush out port, welded VCR fitting with standard finish (5,000 psi max)
Media Compatibility:	Any medium compatible with 316 SS isolation; 10,000 psi range only available with 17-4 PH / 316 Stainless steel
Optional:	Clean to ASME B40-100 Level IV, (Not marked for oxygen service)
Agency Approvals:	CE, FCC (CFR47), UL61010-1

All specifications are subject to change without notice.
All sales subject to standard terms and conditions.
©2022 Ashcroft Inc., ate-2_calibrator_ds_RevE_05-13-22

heise.com
info@heise.com
1.800.328.8258

ASHCROFT®
Trust the shield.®

AM2-1 Low Pressure Modules

ORDERING CODE Example:	AM2	1	C	A	D	INH2O/	100	A
Model								
AM2 - Low pressure module	AM2							
Sensor Type								
1 - Capacitive sensor		1						
Accuracy								
B - ±0.1% Accuracy (STD.)								
C - ±0.06% Accuracy (STD.) (“C” accuracy is ±0.06% for ranges 1.0 in. H_2O and higher)			C					
C - ±0.07% Accuracy (STD.) (“C” accuracy is ±0.07% for ranges below 0.5 in. H_2O and bolded values in range table)								
Media Compatibility								
A - Non-Isolated Sensor				A				
Pressure Type								
C - Compound								
D - Differential					D			
Pressure Units								
INH2O						INH2O/		
MMHG								
KPA								
MBAR								
CMH2O								
MMH2O								
Ranges (see range table below)								
100							100	
Inlet Fitting								
A - ⅛ NPT Female								A

DIFFERENTIAL PRESSURE RANGES					
inH_2O	mmHg	kPa	mbar	cmH_2O	mmH_2O
0.25	**0.5**	**0.2**	**0.6**	**0.6**	**6**
0.5	1	0.5	1	1.5	15
1	2	1	2.5	3	30
2	3	2.5	4	5	50
3	5	4	6	6	60
5	10	6	10	15	150
10	20	10	25	30	300
15	30	25	40	60	600
25	50	40	60	150	1500
50	100		100	200	2000
100	200		250	500	5000
150	300		400		
200					

COMPOUND PRESSURE RANGES (All prefixed by ± sign)					
inH_2O	mmHg	kPa	mbar	cmH_2O	mmH_2O
0.125	**0.2**	**0.1**	**0.25**	**0.3**	**3**
0.25	**0.5**	**0.25**	**0.6**	**0.6**	**6**
0.5	**1**	0.4	**1**	**1.5**	**15**
1	**2**	0.6	**2.5**	**3**	**30**
1.5	3	1	4	5	50
2.5	5	1.6	6	6	60
5	10	2.5	10	15	150
7.5	15	6	16	20	200
12.5	20	10	25	30	300
25	50	25	60	60	600
50	75		100	150	1500
75	100		160	200	2000
100	150		250	300	3000
	200				

Bold type indicates “C” accuracy is ±0.07% of full span
Consult factory for additional ranges and units of measure
Ranges available per unit of measure

All specifications are subject to change without notice.
All sales subject to standard terms and conditions.
©2022 Ashcroft Inc., ate-2_calibrator_ds_RevE_05-13-22

heise.com
info@heise.com
1.800.328.8258

ASHCROFT®
Trust the shield.®

AM2-2 High Pressure Modules

ORDERING CODE Example:	AM2	2	H	I	G	PSI/	1500	A
Model								
AM2 - Medium/High pressure module	AM2							
Sensor Type								
2 - Piezo-resistive sensor		2						
Accuracy								
B - ±0.1% accuracy (STD.)								
C - ±0.05% accuracy (STD.)								
D - ±0.025% accuracy (STD.)								
F - ±0.1% Enhanced temperature compensation 20 °F to 120 °F								
G - ±0.05% Enhanced temperature compensation 20 °F to 120 °F								
H - ±0.025% Enhanced temperature compensation 20 °F to 120 °F			H					
Media Compatibility								
I - Isolated sensor				I				
W - Clean to ASME B40-100 Level IV								
Pressure Type								
G - Gauge					G			
A - Absolute								
V - Vacuum								
C - Compound								
Pressure Units								
PSI						PSI/		
INH2O								
INHG								
KPA								
MBAR								
CMH2O								
MMHG								
BAR								
MPA								
MMH2O								
KGCM2								
Ranges (see range table below)								
1500							1500	
Inlet Fitting								
A - ⅛ NPT Internal								A
B - ⅛ NPT Internal with flush port								
C - G ⅛ British std thread								
D - G ⅛ British std with flush port								

GAUGE / ABSOLUTE PRESSURE RANGES (*Gauge pressure only) (no absolute)									
psi	inH_2O	inHg	kPa	mbar	cmH_2O	mmHg	$bar/kgcm^2$	MPa	mmH_2O
*5	*100	*10	*25	*250	*250	250	1	1	*3000
10	150	20	40	*300	*300	500	1.6	1.6	5000
15	250	30	60	400	400	750	2.5	2.5	10000
20	300	50	100	500	500	1000	4	4	
30	400	100	160	600	600	1500	6	6	
50	500	200	250	1000	1000	3000	10	10	
60	800	300	400	1600	1600	5000	16	16	
100	1000	500	600	2000	2000		25	25	
150			1000	2500	2500		40	40	
200				4000	4000		60	50	
250				5000	5000		100		
300				6000	6000		160		
500				10000	10000		250		
600							400		
1000							500		
1500									
2000									
2500									
3000									
5000									
6000									
7500									
*10000									
Vacuum Ranges									
10		20	60	600	600	500	0.6		5000
15		30	100	1000	1000	750	1		
Compound Pressure Ranges									
±5	±100	±10	±25	±300	±300	±300	±0.25		±3000
±10	±250	±20	±40	±600	±600	±500	±0.4		±6000
V15	V400	V30	±60	V1000	V1000	V750	±0.6		V10000
V30		V60	V100	V2000	V2000	V1500	V1		
V60		V100	V200	V4000	V4000	V3000	V2		
			V400				V4		

*Gauge pressure only and 0.1% accuracy only. Ranges available per unit of measure

All specifications are subject to change without notice.
All sales subject to standard terms and conditions.
©2022 Ashcroft Inc., ate-2_calibrator_ds_RevE_05-13-22

heise.com
info@heise.com
1.800.328.8258

ASHCROFT®
Trust the shield.®

AM2-RT1, AM2-RT2 RTD Temperature Modules

FEATURES

- Measures temperature with most RTD probes
- Supports 2, 3 & 4 - wire RTDs
- Displays measurement for Farenheit, Celsius, Kelvin Rankine and ohms
- Easy configurability to meet application

PRODUCT SPECIFICATIONS:

Following specification is based on use of 4 wire RTD probe; accuracy does not include contribution from RT

AM2-RT1 RTD TEMPERATURE MODULE

Used with RTD Probe Type	Meaurement Range and Accuracy	Resolution*
Pt100 (385 & 392)	-200 to 550 °C: ±0.1 5°C	0.01 °C or °F
Ni 120	–80 to 260 °C: ±0. 1°C	0.1°C or °F
Cu 10	–70 to 150 °C: ±0.6 °C	0.1°C or °F
Ohms	±0.01% reading ±0.02 ohms	0.004 ohms
AM2-RT2 RTD TEMPERATURE MODULE		
Pt1000	–200 to 550 °C: ±0.15 °C	0.01 °C or °F
Ohms	±0.01% reading ±0.02 ohm	0.004 ohms

* Select from 1, 0.1, 0.01 and 0.001 degrees or ohms. Resolution for a given probe is dependent on the output of the probe. Maximum resolution is 1 part in 100,000 of full scale ohms Select from 1, 0.1, 0.01 and 0.001 degrees or output for the probe.

Temperature Error:

Better than ±0.0005% of reading per degree Fahrenheit from a reference temperature of 70 ° ±3° degrees F°

Input Receptacle:

TA4F type RTD connector

HOW TO ORDER RTD PROBES

Probes are all 4 wire RTD's with 304 stainless steel sheath and a TA4F electrical connector for compatibility with AM2-RT1 interface modules. They are provided in DIN Class A accuracy.

Part No.	Description
840X010-01	Pt100 (385), 0.125 diameter, 12 inch length, handle and 5 ft. coiled cable
840X010-02	Pt100 (385), 0.25 diameter, 12 inch length, handle and 5 ft. coiled cable
840X010-05	Pt100 (385), 0.125 diameter, 6 inch length, handle and 5 ft. coiled cable
840X010-06	Pt100 (385), 0.25 diameter, 6 inch length, handle and 5 ft.coiled cable
840X010-11	Pt100 (385), 0.125 diameter, 8 inch length, handle and 5 ft.coiled cable
840X010-03	Pt100 (385), 0.125 diameter, 12 inch length, 10 ft. straight extension lead with plug (no handle)
840X010-04	Pt100 (385), 0.25 diameter, 12 inch length, 10 ft. straight extension lead with plug (no handle)
840X010-07	Pt100 (385), 0.125 diameter, 6 inch length, 10 ft. straight extension lead with plug (no handle)
840X010-08	Pt100 (385), 0.25 diameter, 6 inch length, 10 ft. straight extension lead with plug (no handle)
828X136-01	TA4F mating connector for use with HM2-RT1 module and user supplied RTD probe

All specifications are subject to change without notice.
All sales subject to standard terms and conditions.
©2022 Ashcroft Inc., ate-2_calibrator_ds_RevE_05-13-22

heise.com
info@heise.com
1.800.328.8258

ASHCROFT®
Trust the shield.®

AM2-TC1 Thermocouple Temperature Modules

FEATURES

- Allows ATE-2 to measure temperature with a thermocouple
- Pre-programmed to accept 8 most common thermocouple types
- Displays measurement for Farenheit, Celsius, Kelvin Rankine and millivolts
- Reference junctions: automatic internal or manual external

PRODUCT SPECIFICATIONS:

AM2-TC1 THERMOCOUPLE TEMPERATURE MODULE

Unit of Measure (selectable):
°C, °F, °K, °R and millivolts

Reference Junction (selectable):
Automatic Mode: The AM2-TC1 module incorporates an internal resistor/ thermistor based reference junction, which may be selected for use in the temperature readout mode.

Manual Mode:
An external reference junction may be used in place of the internal junction. External reference junctions may be applied in the temperature or direct millivolt readout modes.

Resolution Reading in Temperature Units (selectable):
1, .1 or .01 degrees. “Auto” mode selection that allows the ATE-2 to automatically configure the readout to the highest significant resolution (resolution closest to the tolerance) for the thermocouple type selected.

Resolution Reading in Millivolts:
.001 millivolts

Thermocouple Connection (to interface module):
Requires a “miniature thermocouple connector” (Omega type SMP), specifically matched to the thermocouple type to be used. These connectors may be purchased as an accessory under the following part numbers: (see how to order thermocouple connector table)

SYSTEM ACCURACY (READING IN TEMPERATURE UNITS):
Includes the base unit and AM2-TC1 interface module. (Does not include inaccuracy of the thermocouple device. Consult thermocouple manufacturer or ANSI MC96.1 for thermocouple accuracy specifications. Typical inaccuracies range from ±1 to ±2.2°C.)

Conversion Factors to convert °C specifications to other units of measure:
To convert from C to F; F = (1.8 x C) + 32
To convert from C to K: K = C + 273.15
To convert from C to R; R = (1.8 x C) + 427.6

Additional thermocouple information on the following page.

HOW TO ORDER THERMOCOUPLE CONNECTOR

Part No.	Description
828X161-01	Type J Connector
828X161-02	Type K Connector
828X161-03	Type T Connector
828X161-04	Type E Connector
828X161-05	Type R Connector
828X161-06	Type S Connector
828X161-07	Type B Connector
828X161-08	Type N Connector

All specifications are subject to change without notice.
All sales subject to standard terms and conditions.
©2022 Ashcroft Inc., ate-2_calibrator_ds_RevE_05-13-22

heise.com
info@heise.com
1.800.328.8258

ASHCROFT®
Trust the shield.®

AM2-TC1 Thermocouple Temperature Modules

Thermocouple Type	Measurement Range (°C)	Accuracy @ 25 °C (Not Including Internal Reference Junction)	Accuracy @ 25 °C (Including Internal Reference Junction Expressed as ±°C	Max Additional Error Due to Ambient Temperature Deviation From 25 °C Expressed as Additional °C Deviation from 25 °C
J	to -151 -210 to 1200 -150	0.7 0.3	1.1 0.4	0.02 0.01
K	to -201 -240 to -101 -200 to 999 -100	1.5 1.0 0.5	2.2 1.5 0.8	0.05 0.03 0.02
T	-250 to -201 -200 to -101 -100 to 400	1.5 0.8 0.5	2.2 1.2 0.8	0.05 0.03 0.02
E	-250 to -201 -200 to -101 -100 to 400	1.2 0.6 0.3	2.0 1.1 0.6	0.04 0.02 0.01
R & S	-50 to 299 300 to 1768	3.4 1.2	3.6 1.3	0.10 0.04
B	100 to 199 200 to 499 500 to 999 1000 to 1820	14.0 5.0 3.0 1.2	14.0 5.0 3.0 1.2	0.44 0.16 0.08 0.04
N	-250 to -226 -225 to -101 -100 to 1300	4.3 2.1 1.0	5.7 2.8 1.4	0.14 0.07 0.02

AMBIENT TEMPERATURE EFFECT:

To calculate, multiply degrees deviation from 25 °C times the value listed in the far right column of the listed table. Only applied when using the internal reference junction, within the ambient window of 0-50 °C.

TO CALCULATE TOTAL SYSTEM/MEASUREMENT ACCURACY:

Accuracy = System Accuracy @ 25 °C + System Ambient Temperature Effect + Inaccuracy of Thermocouple Device

SYSTEM ACCURACY (BASED ON DIRECT MILLIVOLT READING FROM THERMOCOUPLE):

Includes the base unit and AM2-TC1 interface module. (Does not include inaccuracy due to the thermocouple device. Reference junction not applicable to direct millivolt readings.)

Input Range of Module	Accuracy @ 25 °C	Max. Additional Error Due to Ambient Temperature Deviation From 25 °C. Expressed As Additional Millivolt Error Per Each °C Deviation From 25 °C
10 to 100mV	±0.01 to 100mV	.001

All specifications are subject to change without notice.
All sales subject to standard terms and conditions.
©2022 Ashcroft Inc., ate-2_calibrator_ds_RevE_05-13-22

heise.com
info@heise.com
1.800.328.8258

ASHCROFT®
Trust the shield.®

OPTIONS

Carrying, Transport and Protective Cases:

Contoured: Protective Instrument Case with Shoulder Strap. P/N 864D079-01

Heavy Duty, Watertight Instrument Carrying / Transport Case. P/N ATE2-CASE

DIMENSIONS

Base Unit

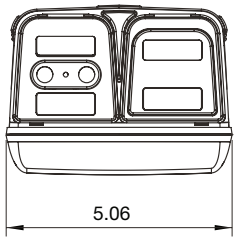

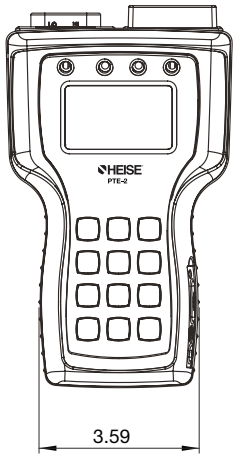

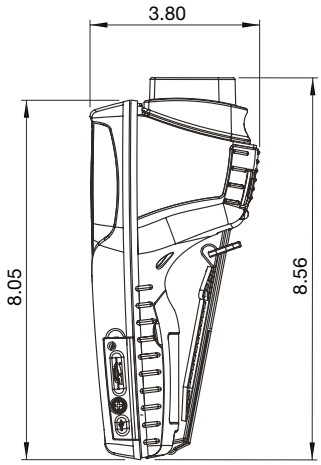

Carrying Case

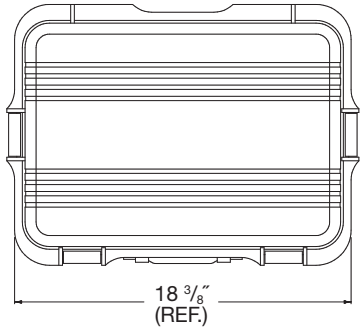

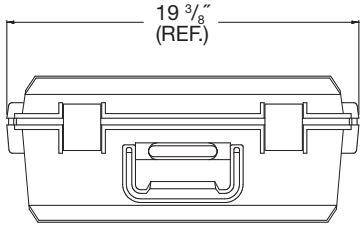

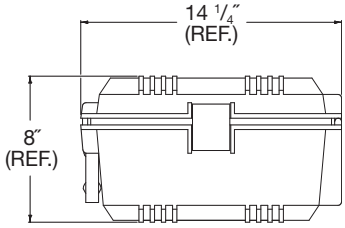

All specifications are subject to change without notice.
All sales subject to standard terms and conditions.
©2022 Ashcroft Inc., ate-2_calibrator_ds_RevE_05-13-22

heise.com
info@heise.com
1.800.328.8258