Established 1981
Advanced Test Equipment Rentals
www.atecorp.com 800-404-ATEC (2832)

F.W. BELL

9000 SERIES GAUSSMETERS

OPERATION MANUAL

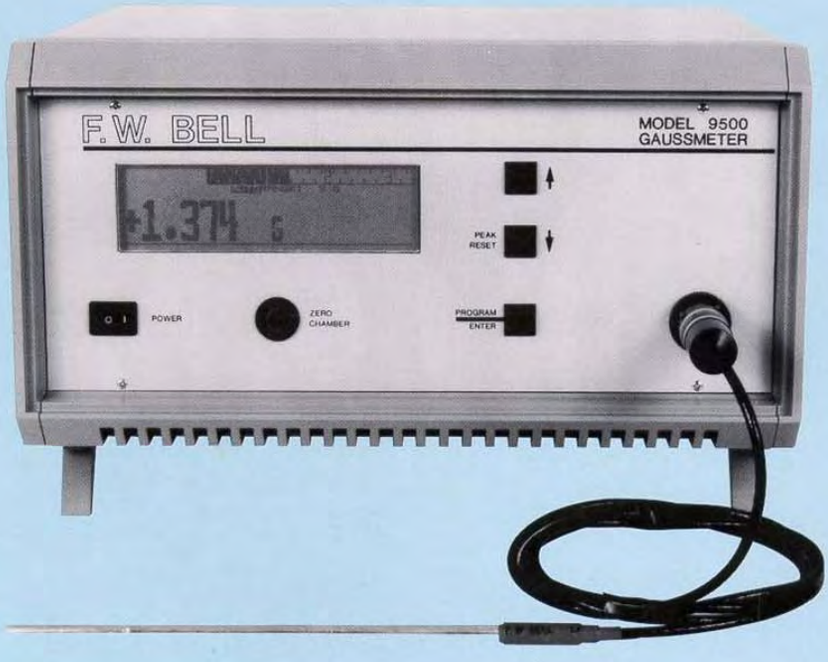

MODEL 9500 GAUSSMETER

359500

MODEL
9500

9000 SERIES
GAUSSMETERS

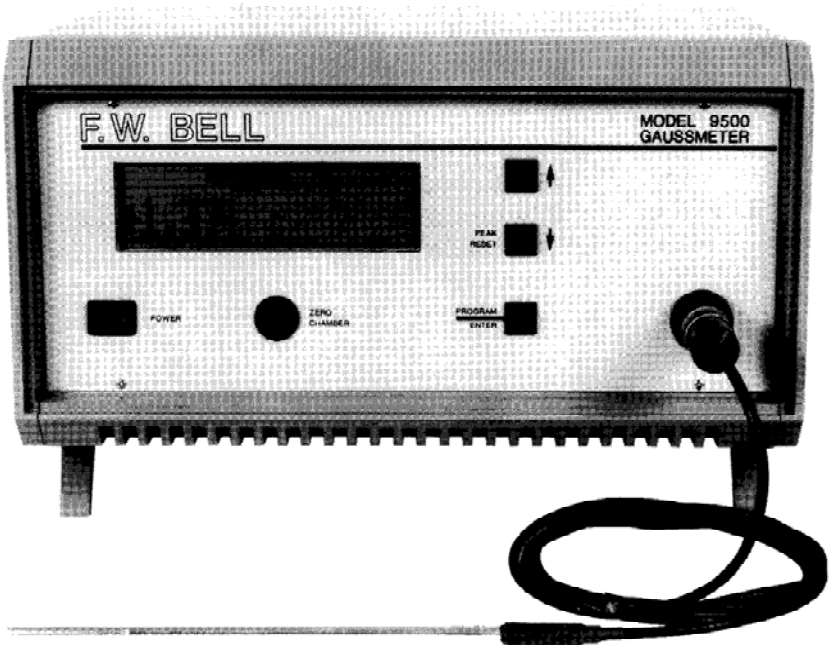

MODEL 9500 GAUSSMETER
Operation Manual

F.W. BELL
6120 HANGING MOSS ROAD
ORLANDO, FLORIDA 32807
PHONE: 407-678-6900
FAX: 407-677-5765

9310.150 LITHO IN U.S.A. UN-01-185

MODEL
9500

9000 SERIES
GAUSSMETERS

TABLE OF CONTENTS

SPECIFICATIONS 1
SIMPLIFIED OPERATING INSTRUCTIONS FOR THE MODEL-9500 GAUSSMETER 6

SECTION I MODEL-9500 GAUSSMETER DESCRIPTION 7
I-A INTRODUCTION 7
I-B FUNCTIONAL DESCRIPTION 7
SECTION II MODEL-9500 GAUSSMETER PREPERATION **10**
II-A POWER RECEPTACLE 10
II-B PROBE INSTALLATION 10
II-C POWER-UP 11
SECTION III FIELD MEASUREMENT OPERATIONS **12**
III-A DISPLAY FORMAT 12
III-B DIGITAL READING 12
III-C BARGRAPH 12
III-D INFORMATION BLOCK 13
III-E CHANNEL DEACTIVATION 13
III-F OVERRANGE CONDITIONS 13
III-G PEAK HOLD OPERATION 13
III-H POWER-UP INITIALIZATION 14
III-I PROBE ORIENTATION VERSUS POLARITY 14
III-J ANALOG OUTPUT 14
III-K REMOTE TERMINAL ("MASTER") OPERATION 15
III-L INTERNAL RECALIBRATION 17
III-M FILTER SELECTION 17
SECTION IV MENU OPERATIONS/GAUSSMETER PROGRAMMING **18**
IV-A INTRODUCTION 18
IV-B MENU MODE OPERATION 18
IV-C MAIN MENU 18
IV-D MODE SELECTION 19
IV-E RANGE SELECTION 19
IV-F PEAK HOLD 20
IV-G DISPLAY FORMAT 21
IV-H SETUP SAVE-LOAD 21
IV-I PROBE ZERO 21
IV-J PROBE RELATIVE 23
IV-K COMMUNICATIONS FORMAT 25
IV-L MENU OPERATIONS VIA REMOTE TERMINAL 26
SECTION V REMOTE (SLAVE) MODE OPERATION 27
V-A OVERVIEW 27
V-B REMOTE (SLAVE) COMMANDS 27
V-B(a) Mode Selection 27
V-B(b) Range Selection 28
V-B(c) Peak Hold 28
V-B(d) Display Format 29
V-B(e) Communications Format - IEEE-488 29
V-B(f) Communications Format - RS-232 30
V-B(g) Setup Save-Load 30
V-B(h) Probe Zero 31
V-B(i) Probe Relative 31
V-B(j) Measure 32
V-B(k) Lockout 33
V-B(l) Calibrate 33
V-C COMMAND STRING ORGANIZATION 34
V-D COMMAND EXECUTION 35
V-E IEEE-488 IMPLEMENTATION 36
V-F RS-232 IMPLEMENTATION 37

SECTION VI COMMUNICATIONS INTERFACE **38**
VI-A RS-232 PORT FUNCTIONAL DESCRIPTION 38
VI-B RS-232 ELECTRICAL INTERFACE/HANDSHAKING 39
VI-C IEEE-488 BUS FUNCTIONAL DESCRIPTION 41
VI-D IEEE-488 ELECTRICAL INTERFACE 43
SECTION VII DIAGNOSTIC ERROR CODES **44**
VII-A DIAGNOSTIC OVERVIEW 44
VII-B POWER-UP SEQUENCE 44
VII-C DIAGNOSTIC ERROR CODES 44
VII-C(a) ERROR 0xxxx, 1xxxx 45
VII-C(b) ERROR 2xxxx 45
VII-C(c) ERROR 34xxxx 45
VII-C(d) ERROR 35xxx 45
VII-C(e) ERROR 36xxxx 45
VII-C(f) ERROR 44xxxx 45
VII-C(g) ERROR 45xxxx 45
VII-C(h) ERROR 51xxxx 45
VII-C(i) ERROR 61xxxx 45
SECTION VIII MODEL-9500 THEORY OF OPERATION **46**
VIII-A POWER SUPPLY 46
VIII-B PROCESSOR CARD 46
VIII-C RS-232 CARD 47
VIII-D IEEE-488 CARD 47
VIII-E ANALOG CARD 47
VIII-F 4TH GENERATION HALL GENERATOR PROBE 48
BLOCK DIAGRAM 49
SECTION IX INSTALLATION OF OPTIONS **50**
IX-A INSTALLATION OF COMMUNICATIONS PORT OPTIONS 50
IX-B INSTALLATION OF RACK MOUNTING OPTION 51
APPENDIX 52
PROGRAMMING INFORMATION 52
RS-232 DEMO PROGRAM 54
IEEE-488 DEMO PROGRAM 57

MODEL 9500

9000 SERIES GAUSSMETERS

SERIES-9500A SPECIFICATIONS

RANGES/RESOLUTION

01X PROBE

RANGES		RESOLUTION	
GAUSS	TESLA	GAUSS	TESLA
30 mG	3 uT	10 uG	0.001 uT
300 mG	30 uT	10 uT	0.001 uT
3 G	300 uT	100 uG	0.01 uT

.01 X Probe can not be used for measurements above 2 Gauss

1x PROBE

RANGES		RESOLUTION	
GAUSS	TESLA	GAUSS	TESLA
3 G	300 uT	1 mG	0.1 uT
30 G	3 mT	1 mG	0.1 uT
300 G	30 mT	10 mG	1 uT
3 kG	300 mT	100 mG	10 uT
30 kG	3 T	1 G	100 uT
300 kG	30 T	10 G	1 mT

10 X PROBE

RANGES		RESOLUTION	
GAUSS	TESLA	GAUSS	TESLA
30 G	3 mT	10 mG	1 uT
300 G	30 mT	10 mG	1 uT
3 kG	300 mT	100 mG	10 uT
30 kG	3 T	1 G	100 uT
300 kG	30 T	10 G	1 mT

dc ACCURACY

Range	± % of Reading	± Number of Counts
30 mG to 30 G	.075	14
300 G to 300 KG	.075	6

Additional Influences:

Temperature Coefficient: <±(0.02% of Reading, ± 3 Counts) /C
From 0C to +50 C

dc Calibration Reference: ± 0.1 % of Reading
1 year; 23C, ± 5C

ac Accuracy — Ranges

Filter Off — 30 mG to 30 G* — 300 G to 300 KG

Frequency(HZ)	±% of Reading	±Number of Counts	±% of Reading	±Number of Counts
20-49	3.6	500	3.6	75
50-99	1.7	500	1.7	75
100-499	1.0	500	1.0	75
500-10K	0.5	500	0.5	75

ac ACCURACY — Ranges

Filter On — 30 mG to 30 G* — 300 G to 300 KG

Frequency(HZ)	% of Reading	±Number of Counts	% of Reading	±Number of Counts
20-49	± 3.6	500	± 3.6	75
50-99	± 1.7	500	± 1.7	75
100-499	- 10	500	- 10	75
500-1K	- 30	500	- 30	75

Additional Influences:
Temperature Coefficient:<± (0.04% of Reading, ±5 Counts) /C
From 0C to +50C
ac Calibration Reference:± 1.0% of Reading
Sinewave input, >10% of Full Scale
1 Year; 23 C, ± 5* C

NOTES: dc and ac accuracy is for the corrected, displayed reading and the digital information sent out on the RS-232 port or the IEEE-488 bus.

Accuracies do not include probe errors.
*1X probe only

FREQUENCY RANGE:

DC Mode	dc
AC Mode (Filter on)	20 Hz to 1 KHz
AC Mode (Filter off)	20 Hz to 10 KHz

FREQUENCY RANGE ANALOG OUTPUT

dC MODE: dc TO 400 HZ
ac MODE: (Filter on) 20 Hz to 1 KHz
ac MODE: (Filter off) 20 Hz to 10 KHz

TEMPERATURE RANGE:

Operating	0 to 50C
Storage	-20C to 70C

HUMIDITY RANGE:

0 TO 35°C	80% RH
35° TO 50°C	70% RH

FRONT PANEL DISPLAY:

Type	240 x 64 dot matrix LCD with a Backlight
Viewing area	5.2 in (13.2 cm) wide, 1.6 in (4.1 cm) high

POWER:

Volts	90-125 or 180-250	
Frequency	50-60 Hz	50-60 Hz
Current	2.0 A	1.0 A

SIZE:

13.47 in (34.2 cm) wide, 7.53 in (19.1 cm) high (including feet),
14.12 in (36.1 cm) deep

WEIGHT: (Maximum)

Net	18.5 lbs (8.4 Kg)
Shipping	26.0 lbs (11.8 Kg)

FRONT PANEL ZERO GAUSS CHAMBER:

Cavity size	.344 in (.9 cm) I.D. 2.0 in (5.1 cm) deep
Attenuation	80db in a 300 G field

COMMUNICATIONS PORTS:

RS-232	Standard 25 pin "D" connector
IEEE-488	Standard 24 pin GPIB connector

WARM UP TIME:

1 Hour to rated specifications

ANALOG OUTPUT:

Output Voltage	3.0 volts Full Scale
Source impedance	<100 ohms
Termination	Standard BNC connector

DC ANALOG OUTPUT ACCURACY:

For output >10% of Full Scale

1 Year 23C ± 5C

RANGE	± % Reading	± % Full Scale
3mG to 3 G	.3	4.0
30 G	.3	.3
300 G to 3MG	.3	.1

Temperature Coefficient < + (.03% of Reading + .005% FS) /C
From 0 to 50c

AC ANALOG OUTPUT ACCURACY

FILTER OFF

RANGES

	30mG to 30 G		300 G to 3 MG	
Frequency(Hz)	±% OF READING	±% OF FULL SCALE	±% OF READING	±% OF FULL SCALE
20-49	36%	2.0	36%	0.25
50-99	17%	2.0	17%	0.25
100-499	10%	2.0	10%	0.25
500-10K	5%	2.0	5%	0.25

ac ANALOG OUTPUT ACCURACY

FILTER ON

RANGES

	30mG to 30G		300 G to 3 MG	
Frequency(Hz)	% of Reading	±% of Full Scale	% of Reading	±% of Full Scale
20-39	-36%	2.0	-36%	0.25
40-79	-17%	2.0	-17%	0.25
80-159	±5%	2.0	±5%	0.25
160-319	±5%	2.0	±5%	0.25
320-639	-17%	2.0	-17%	0.25
640-1280	-36%	2.0	-36%	0.25

1 Year; 23 C, ± 5C

Sinewave input, >10% of Full Scale

Additional Influences:

Temperature Coefficeint:<±(0.04% of Reading, +0.005% FS)/C
From 0C to +50C

FREQUENCY RANGE (Analog Output)	dc Mode:	dc to 400 Hz
	ac Mode:	20 HZ to 10 kHz

OUTPUT NOISE, ac MODE	Range	rms Noise
	30 mG to 3 G	300 mV
	30 G	30 mV
	300 G to 3 MG	7 mV

NOTE:
THE DC MODE ANALOG OUTPUT IS INSTANTANEOUSLY PROPORTIONAL TO THE FIELD IN MAGNITUDE AND POLARITY FROM DC TO 400 Hz.

SIMPLIFIED OPERATING INSTRUCTIONS FOR THE MODEL-9500 GAUSSMETER

1) Check the rear panel power receptacle to insure that the voltage showing is the voltage you will be using, 115 volts ac or 230 volts ac. If it is necessary to change this setting, refer to Section II-A.

2) With the power turned off, connect the required probe via the connector on the front panel of the gaussmeter. See Section II-B.

3) Connect power to the Model-9500 and turn on the instrument by locating the Power Switch on the front panel and depressing the side marked 1.

NOTE: At turn-on, the screen should display a large F.W. Bell logo. Beneath the logo, various messages will indicate the progress of the initialization. If any error messages occur at this time, refer to Section VII, Diagnostic Error Codes.

4) Assuming no error codes are present, the gaussmeter is now in the MEASURE mode and will begin field measurements.

NOTE: All operating parameters such as range setting, peak/hold, display format, communication format, etc... will be initialized to the same settings that were present when the gaussmeter was last turned off.

5) Prior to making accurate readings, it is necessary to zero the probe by following the procedures below:

a) Press the ENTER/PROGRAM pushbutton. The MAIN MENU will appear.

b) Using the the up (↑) and down (↓) pushbuttons, advance the cursor to PROBE ZERO function.

c) Press ENTER. The PROBE ZERO menu will appear.

d) Install the probe tip in the ZERO GAUSS CHAMBER located directly below the display. Press ENTER twice.

e) The gaussmeter will proceed to zero the probe on each range setting, for either AC or DC operation, depending on the present mode setting.

f) Upon completion, the PROBE ZERO menu will reappear. Advance the cursor to RUN. Press ENTER to resume field measurements.

6) Consult Section IV for more information on MENU operations, or the TABLE OF CONTENTS for references to other gaussmeter features.

NOTE: Greatest accuracy will be obtained after a 1-hour warm up period.

SECTION I

GENERAL DESCRIPTION

I-A INTRODUCTION

The MODEL-9500 gaussmeter represents the latest developments in the science of measuring magnetic flux density using the Hall effect. Either steady state (dc) or alternating (ac) fields can be measured. When matched with the appropriate F.W. Bell fourth-generation Hall generator probe, fields as low as 10 μG (0.001 μT) or as high as 299.9 Kilogauss (29.99 tesla), at frequencies up to 10 kHz, can be measured with extreme accuracy and 4-3/4 digit resolution.

The MODEL-9500 features PEAK HOLD, AUTORANGING, RELATIVE operation, auto ZEROing, GAUSS or TESLA readout, digital *and* bargraph representation, diagnostics and remote operation with an IEEE-488 (GPIB) instrumentation bus and an RS-232 communications port (both optional). All information is displayed on an illuminated graphics liquid crystal display (LCD)

The gaussmeter employs a menu-driven format to allow the user to program all aspects of gaussmeter operation with ease and speed.

I-B FUNCTIONAL DESCRIPTION

Figures I-A and I-B depict the MODEL-9500 front and rear panels, respectively. The gaussmeter is housed in a standard 7.53" (19.1 cm) high x 13.47" (34.2 cm) wide x 14.21" (36.1 cm) deep cabinet featuring pop-up feet for tabletop use, (optional) brackets for rack mounting and (optional) carrying handle/bail.

FRONT PANEL

(1) DISPLAY	1920-pixel (240 x 64) dot matrix (graphics) LCD with backlight. Contrast is preset at the factory.
(2) POWER SWITCH	Rocker type power switch with international legends ("0"=OFF, "1"=ON).
(3) ZERO GAUSS CHAMBER	Recessed double-wall Mu-metal chamber used to shield the probe from stray magnetic fields during the PROBE ZERO operation. Attenuation is 80 dB in a 300 G field.
(4) "↓" /"RESET" PUSHBUTTON	Dual-function momentary-contact pushbutton switch used to reset PEAK readings in the MEASURE mode or advance the cursor down in the MENU mode.
(5) "↑" PUSHBUTTON	Momentary-contact pushbutton switch used to advance the cursor up in the MENU mode.
(6) "PROGRAM/ENTER" PUSHBUTTON	Dual-function momentary-contact pushbutton switch used to enter the MENU mode and validate selections during MENU operations.

SECTION I continued
General Description

(7) PROBE CONNECTOR — Nine-pin twist-lock non-magnetic connector that mates to F.W. Bell fourth-generation Hall generator probes.

REAR PANEL

(8) POWER RECEPTACLE/ FUSE HOLDER/ LINE VOLTAGE SWITCH — This is a multi-purpose receptacle that accepts an international instrumentation power line cord. The middle (ground) contact is connected to the chassis. This receptacle also contains the line fuse, storage space for a spare fuse and a line voltage selector.

WARNING! See SECTION II before applying power to the gaussmeter or damage may result!!

(9) RS-232 PORT CONNECTOR — Standard 25-pin "D" type female connector for RS-232 communications.

(10) IEEE-488 BUS CONNECTOR — Standard 24-pin GPIB connector for IEEE-488 bus interface.

(11) ANALOG OUTPUT — Calibrated analog output. Standard BNC connectors.

(12) INFORMATION LABEL — Label identifies the model number and serial number along with line power data.

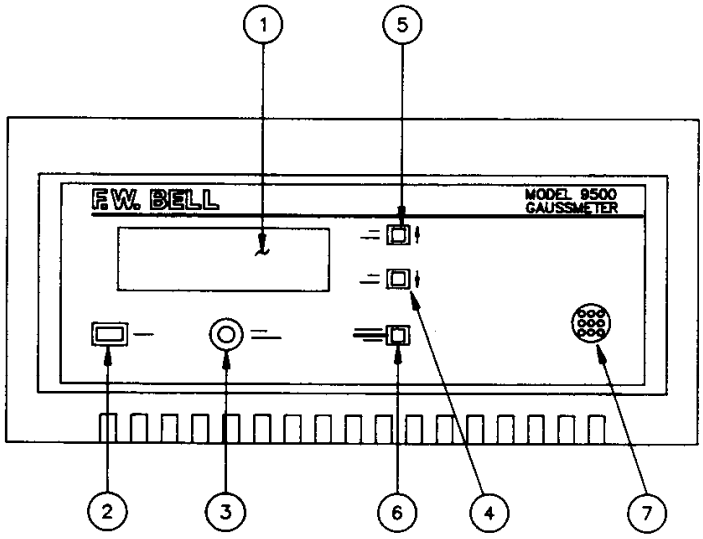

Figure I-A
MODEL-9500 Front Panel

SECTION I continued
General Description

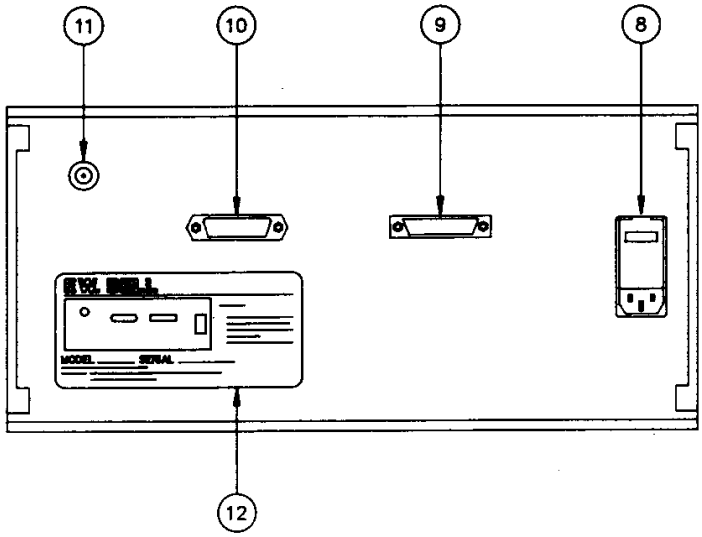

Figure I-B
MODEL-9500 Rear Panel

SECTION II

II-A POWER RECEPTACLE

READ THIS CAREFULLY!

The MODEL-9500 gaussmeter has been factory-configured to operate on a line voltage of 115 Vac. If operation at 230 Vac is required, perform the following steps *or damage may result:*

MODEL-9500 GAUSSMETER PREPARATION

1) See figure II-A. This is the line power cord receptacle designed to accept an international instrumentation line cord. This assembly also contains the line fuse and voltage selector. Remove the line cord.

2) Near the top of the assembly is a slot. Insert a narrow screwdriver and *gently* release the access door (the door will not open unless the line cord is removed). The door will swing down.

3) Remove the voltage selector drum (marked "115 VAC") by pulling straight out.

4) Remove both fuse holders (marked with a " →") by pulling straight out. The left-hand holder is used to hold a spare fuse. The right-hand fuse holder is the actual in-circuit fuse.The gaussmeter is shipped with a 230 Vac /1 A fuse in the spare location, and a 115 Vac /2 A fuse in the active location. Reverse the positions of the holders and reinstall, making sure that the "→" points to the right.

5) Rotate the voltage selector drum to read "230 VAC" and reinstall.

6) Close access door. The "230 VAC" legend should be visible through the access door window. Reinstall the line cord.

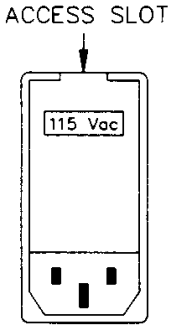

Figure II-A
Rear Panel Power Receptacle

II-B PROBE INSTALLATION

Install the probe connector so that the molded keys in the connector body line up with similar keyways in the receptacle (Figure II-B). Push the connector in until the threaded sleeve on the connector makes contact with the receptacle. Rotate the sleeve clockwise to secure the connector to the receptacle.

SECTION II continued
Gaussmeter Preparation

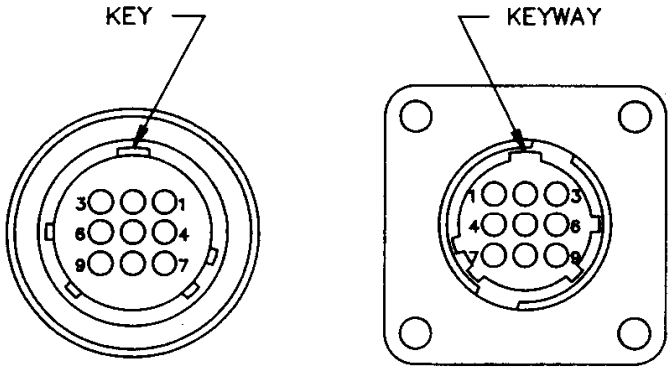

Figure II-B
Probe Connector and Receptacle

II-C POWER UP

Locate the power switch on the front panel and depress the side marked "1" The display's backlight should turn on and the "F.W. Bell" logo will appear. Beneath the logo various messages will appear to indicate the progress of to power-up initialization. During this time the instrument's software version number will appear next to each message. Internal diagnostics are perform first, followed by retrieval of calibration data from the probe. Finally, all display screens are constructed and various operating parameters initializec

If any of the internal diagnostic tests fail, an error message will appear and the gaussmeter may halt the power-up procedure. See Section VII if this occurs.

When the gaussmeter passes diagnostics, the MEASURE mode is entered and field measurements will begin. If no probe is connected, an error message will appear.

Most operating parameters, such as RANGE settings, PEAKHOLD, DISPLA FORMAT, COMMUNICATIONS, etc. will be initialized to the same condition present when the gaussmeter was last turned off. (See Section III-H.) Wher the gaussmeter is turned off again the present setup is saved for next time. The probe's zero and relative values are not saved.

SECTION III

FIELD MEASUREMENT OPERATIONS

III-A DISPLAY FORMAT

In the MEASURE mode of operation the format of the display is shown in Figure III-A. The user can modify the DISPLAY FORMAT with the DISPLAY FORMAT menu. (MENU mode is discussed in Section IV.)

III-B DIGITAL READING

This area ① contains the reading's polarity, five digits of information including a decimal point, and the scale (range) of the reading.

In the dc mode of operation the polarity will be "+" or "—" (or blank if the reading is exactly zero). In the ac mode a sinusoidal symbol will appear (~). The mode of operation (dc or ac) is selected from the MODE SELECTION menu.

In the ac mode the reading represents the true rms value of the field waveform.

The user can remove the digital reading from the display using the DISPLAY FORMAT menu. If this is done the digits and scale will be removed, but the polarity symbol will remain to remind the user that a dc or ac field is being measured.

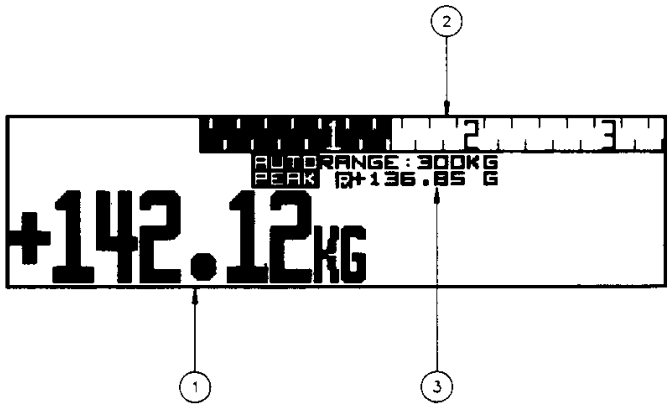

Figure III-A
Measure Mode Display Screen

III-C BARGRAPH

The bargraph ② provides an "analog" representation of the present field reading. Each bar on the graph represents 1/150th (0.667%) of full scale of the presently-selected range. For instance, if the range is 3 kG (3000 G), each bar represents 20 G (3000/150=20). On the 300 μT range, each bar represents 2 μT.

SECTION III continued
Field Measurement Operations

The bargraph has a scale marker at every 5th bar. The 50th bar is marked with a digit "1," the 100th with "2" and the 150th with "3."

The user can remove the bargraph from the display using the DISPLAY FORMAT menu.

III-D INFORMATION BLOCK

The information block ③ contains various annunciators and information about the present state of the gaussmeter as follows:

"AUTO" ANNUNCIATOR	If the AUTOranging function has been turned on (RANGE SELECT menu), the "AUTO" annunciator will be present.
"PEAK" ANNUNCIATOR	If the PEAK HOLD function has been turned on (PEAK HOLD menu), the "PEAK" annunciator will be present. The "PEAK" annunciator is also used to indicate a particular overrange condition as described in Section III-F.
RANGE SETTING	The present range setting for the gaussmeter.
RELATIVE OFFSET	This field contains the RELATIVE field reading that was present when the PROBE RELATIVE operation began (See PROBE RELATIVE menu). The reading is preceded by the "R" annunciator. If the RELATIVE function is turned off this field will be blank.

III-E CHANNEL DEACTIVATION

The probe can be deactivated by turning off *both* the digital reading *and* the bargraph via the DISPLAY FORMAT menu, or by disconnecting the probe.

In the REMOTE mode of operation, field measurements are not possible unless the deactivated probe is reactivated. This can be accomplished from the remote device (see Section V).

III-F OVERRANGE CONDITIONS

If the present field density exceeds the present range of the gaussmeter, both the digital reading and the bargraph will flash. Overrange occurs when the magnitude of the reading exceeds 29999 (2.9999 kG, 299.99 T, etc.). Field readings will continue up to about 9% higher than this magnitude, or 32767.

In some instances the magnetic field being measured may contain spikes or ripple that causes the present range to be exceeded even though the *average* reading is within limits. When this occurs, the "PEAK" annunciator will flash to indicate that the displayed reading may be inaccurate and a higher range should be used.

III-G PEAK HOLD OPERATION

When the PEAK HOLD function is engaged (via the PEAK HOLD menu) the largest absolute field reading will be held on the display. For instance a +200.00 G reading will replace a +100.00 G reading and be held, and a -250.00 reading will replace the previously held +200.00 G reading.

SECTION III continued
Field Measurement Operations

The user can reset a held reading at any time by pressing *and* releasing the RESET pushbutton on the front panel. As the pushbutton is pressed the "PEAK" annunciator will flash to indicate that the reset command has been recognized but the actual reset operation will not occur until the pushbutton is released.

III-H POWER UP INITIALIZATION

The gaussmeter permanently stores the MEASURE mode setup. When the gaussmeter is powered off and on again, the previous settings are restored and the gaussmeter is reinitialized to those settings. The following information is saved:

- MODE (ac/dc, GAUSS/TESLA and FILTER ON/OFF)
- RANGE SETTING (INCLUDING AUTORANGE)
- PEAK HOLD ON/OFF (LAST PEAK READING WILL NOT BE SAVED)
- DIGITS ON/OFF
- BARGRAPH ON/OFF
- BACKLIGHT ON/OFF
- IEEE-488 PRIMARY ADDRESS
- RS-232 PARITY, STOP BITS, CHARACTER LENGTH AND BAUD RATE

The RELATIVE mode will be turned off and the relative offset will be reset to zero.

III-I PROBE ORIENTATION VERSUS POLARITY

In the dc mode of operation, the polarity of the reading versus the orientation of the probe is depicted in Figure III-B. As shown, the magnetic flux lines travelling in the direction indicated by a "B" will result in a positive (+) polarity. Note the position of the "F.W. BELL" legend on the probe handle.

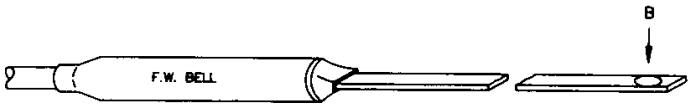

Figure III-B
Probe Orientation Versus Readout Polarity

III-J ANALOG OUTPUT

On the rear panel of the gaussmeter is a connector that, when *connected to an oscilloscope*, allows the user to observe the actual magnetic field waveforms.

In the ac mode, the waveform is the actual field waveform calibrated to 3 Vrms full scale. For instance, with the gaussmeter programmed for a 3 kG range setting (3000 G) a 2.000 Vrms signal correlates to a 2.000 kG field density.

SECTION III continued
Field Measurement Operations

In the dc mode, the output is a dc level calibrated to ±3 Vdc full scale.

NOTE: The gaussmeter digitally corrects the magnetic field density signals for errors due to probe and amplifier nonlinearities, frequency-related attenuation, temperature-related effects etc. before the final reading is displayed. ***The signal available at the ANALOG OUTPUT connector IS NOT CORRECTED for these errors.***

III-K REMOTE TERMINAL ("MASTER") OPERATION

There are two modes of remote operation available in the MODEL-9500 gaussmeter. In the "SLAVE" mode, available from either the RS-232 serial port or the IEEE-488 bus, a *remote device* (typically a computer system or industrial controller) *controls all gaussmeter operations*. This is discussed in Section V.

In the "MASTER" mode, available only from the RS-232 serial port, *the gaussmeter controls a remote terminal or printer device*. This is particularly useful if the the user and gaussmeter must be separated by some distance, or if the user wishes to have a hardcopy of all gaussmeter activity.

The terminal/printer may be connected directly to the gaussmeter, or indirectly through a modem following the electrical connections shown in Section VI. The RS-232 characteristics of both devices must match. The gaussmeter's parameters can be modified via the COMMUNICATIONS FORMAT menu. All MEASURE mode and MENU mode operations are accessible from the terminal. Section IV discusses the remote MENU mode operation.

Whenever field measurements are taking place the gaussmeter will transmit a continuous listing of field measurements and status in a formatted ASCII character stream as shown in Figure III-C.

Initially, a FORMFEED (FF) control character is transmitted. If a printer is connected this should cause the paper feeder to advance to the top of the next sheet of paper. If a terminal is connected this usually clears the screen. The FF is followed by CARRIAGE RETURN (CR) and LINEFEED (LF) control character and then a three-line header containing 79 printable characters per line. Each line is followed by a CR and LF.

Each line of measurement data contains 79 printable ASCII characters followed by a CR and LF and one more LF to create a blank line between each line of readings.

Once 64 lines (including header and blank lines) have been transmitted, the process starts over with the FF character.

SECTION III continued
Field Measurement Operations

F.W. BELL *** MODEL-9500 GAUSSMETER *** VERSION 2.3

Reading	Relative	Range	Auto	Peak	Probe Type
-1.6670 kG	+55.330 G	3 kG	OFF	ON	BULK 1X
-1.7280 kG	+55.330 G	3 kG	OFF	ON	BULK 1X
-1.7290 kG	+55.330 G	3 kG	OFF	ON	BULK 1X
-1.7290 kG	+55.330 G	3 kG	OFF	ON	BULK 1X
-1.7290 kG	+55.330 G	3 kG	OFF	ON	BULK 1X
.	.	.	.	.	.
.	.	.	.	.	.
.	.	.	.	.	.

F.W. BELL *** MODEL-9500 GAUSSMETER *** VERSION 2.3

Reading	Relative	Range	Auto	Peak	Probe Type
-1.7290 kG	+55.330 G	3 kG	OFF	ON	BULK 1X
.	.	.	.	.	.
.	.	.	.	.	.
.	.	.	.	.	.

Figure III-C
Sample "MASTER" Mode Transmission

The user should be aware that the serial transmission rate is much slower than the rate at which the display is updated with new readings. In other words the gaussmeter does not wait for a transmission to complete before taking another reading. Readings taken during transmissions will never appear in a transmission, as the following scenario illustrates:

DISPLAY UPDATE	TRANSMISSION HISTORY
+23.990 kG	Transmission starts (READING = +23.990 kG)
+24.220 kG	Transmission continues
+25.770 kG	Transmission continues
+24.550 kG	Transmission continues
+24.230 kG	Transmission ends
+21.000 kG	New Transmission starts (READING = +21.000 kG)

SECTION III continued
Field Measurement Operations

III-L INTERNAL RECALIBRATION

Occasionally, the gaussmeter will initiate an internal calibration cycle in order to maintain optimum performance. During this time, the phrase "GAUSSMETER BEING RECALIBRATED" will appear on the display and field measurement activity will be suspended. A recalibration will occur:

a) Immediately after the power-up initialization sequence.
b) Any time a new probe is connected.
c) Whenever the internal temperature has changed more than ±5° C since the last recalibration cycle.

The internal recalibration cycle can be user-controlled via the remote communications ports. See section V-B (1) for more information.

The signal present at the rear-panel analog output connector will drop to zero volts during recalibration.

III-M FILTER SELECTION

The MODE SELECTION menu, discussed in Section IV-D, allows for the selection of filters.

In AC mode FILTER-ON engages a lowpass filter that will reduce the high frequency content of the probe signal. Both the displayed reading and the signal available at the rear analog output jack are affected by this filter.

In DC mode FILTER-ON enhances the digital filtering scheme, resulting in greater stability of the displayed reading only (the signal available at the rear analog output jack is not affected). There will be minor reductions in the display update rate in this mode.

Refer to the SPECIFICATIONS for information relating to filter operation.

SECTION IV

MENU OPERATIONS/ GAUSSMETER PROGRAMMING

IV-A INTRODUCTION

The gaussmeter's MENU mode allows the user to modify all aspects of the instrument operation; RANGE settings, DISPLAY format, PEAK HOLD, communications format, etc. Probe ZEROING and RELATIVE operations are also initiated from the MENU mode.

IV-B MENU MODE OPERATION

The MENU mode can be entered at any time by pressing the PROGRAM/ENTER pushbutton. When this occurs all measurement operations cease and the probe is placed in a standby position. The master selection list (MAIN MENU) will appear.

Generally, each menu will contain a primary selection list accompanied by one or more operations lists. Pressing the up "↑" or down "↓" pushbutton allows an item to be chosen from each list. Each time this happens the cursor will advance up or down accordingly. A selection is then validated by pressing the ENTER pushbutton. In some menus the up "↑" and down "↓" pushbuttons will be used to enter numeric values.

Each menu is accompanied by a brief explanation of the operation that it affects. This will appear by selecting HELP. Once the explanation appears, press the ENTER pushbutton to return to the menu. Choosing MAIN MENU will cause a return to the master selection list. Field measurements may be resumed at any time by choosing the RUN selection.

Each gaussmeter is programmed by selecting CHANGE. It is not necessary for the probe to be physically present while programming except during the PROBE ZERO or PROBE RELATIVE operations.

IV-C MAIN MENU

This is the master selection list that appears when entering the MENU mode or when returning from any other menu. The up "↑" or down "↓" pushbutton is used to choose a selection, and the ENTER pushbutton is used to advance to the chosen operation.

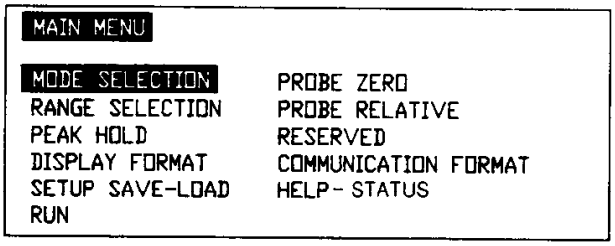

Figure IV-A
MAIN Menu

One of the selections in the MAIN MENU is "HELP-STATUS". When selected the first screen contains general information about menu operations. The next screen contains information about the probe. Displayed is the model number, serial number and Hall device type of the probe. If no probe is connected a "NOT PRESENT" message will appear. If a probe is attached but the meter cannot identify it a "NOT DEFINED" message will appear. The latter message may indicate a problem in the probe or the meter. It may also appear when special calibration hardware is connected. The information on this screen will not be updated until the meter is returned to the RUN mode.

SECTION IV continued
Menu Operations/Gaussmeter Programming

IV-D MODE SELECTION

Mode selection affects three operating parameters: the type of magnetic field being measured (ac for alternating or dc for steady-state), the units of measurement (GAUSS or TESLA) and filter selection.

In the ac mode, field readings will be preceded by a symbol representing a sinusoidal waveform (~), whereas dc readings will be preceded by the appropriate polarity (+ or —).

GAUSS is defined as a flux density of 10^8 lines per square meter. TESLA is defined as 10^{12} lines per square meter. One TESLA=10 kG.

Refer to section III-M for information about filters.

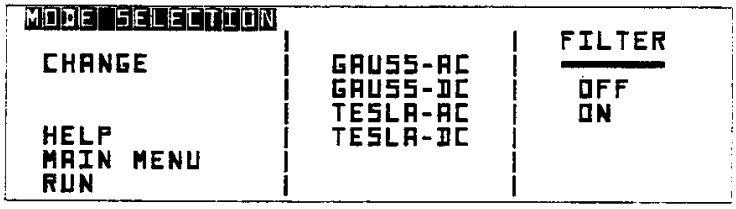

Figure IV-B
MODE SELECTION Menu

IV-E RANGE SELECTION

The choice of ranges depends upon whether the gaussmeter has been programmed to measure GAUSS or TESLA (via MODE SELECTION). The range the user selects will depend on the intensity of the field to be measured versus the resolution required.

NOTE: The user cannot specify whether a probe is 1X, 10X or a .01X device. This information is retrieved from the probe itself. If the probe is not physically present when programming the RANGE the gaussmeter will assume a 1X configuration.

SECTION IV continued
Menu Operations/Gaussmeter Programming

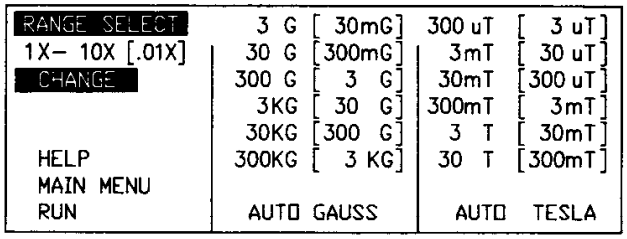

Figure IV-D
RANGE SELECT Menu

One other selection in this menu is the AUTOranging mode. This feature allows the gaussmeter itself to select a RANGE appropriate for the present intensity of the field to obtain the best resolution. Note that AUTOranging will cause a slight degradation in the system speed.

The present range setting always appears in the information block in the MEASURE mode display screen as field measurements are being taken. (See Figure III-A.) If the AUTOrange mode is selected, the AUTO indicator will appear in the block as well.

IV-F PEAK HOLD

PEAK HOLD allows the largest absolute field measurement to be captured and held indefinitely. When engaged, the PEAK indicator will appear in the information block in the MEASURE mode display screen as field measurements are being taken. (See Figure III-A.)

The presently held peak can be manually reset at any time during the measurement process by pressing *and* releasing the RESET pushbutton. The PEAK indicator will flash momentarily to indicate that the reset is in progress, but a new peak will not be captured until the pushbutton is released.

See Section III-G for more information.

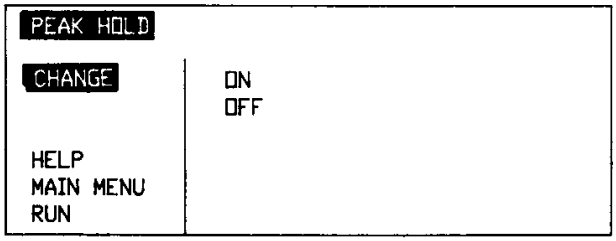

Figure IV-E
PEAK HOLD Menu

SECTION IV continued
Menu Operations/Gaussmeter Programming

IV-G DISPLAY FORMAT

As seen in Figure III-A, the display field has a digital and a bargraph representation of the field density reading. This format can be changed using the DISPLAY FORMAT menu.

Either the digital reading or the bargraph, or both, can be turned off to suit the user's requirements. By turning *both* off, the user eliminates the information from the screen and the probe is placed in a standby position. This also disables the ability to gather field readings in the "SLAVE" mode of remote operation, discussed in Section V. If only the digital reading is turned off, the reading's polarity (~, + or —) will remain on the screen as an indication of the type of field (ac or dc) being measured.

If ambient lighting is inadequate to clearly see the display during the measurement process, the display's backlight can be turned on for better visibility using this menu.

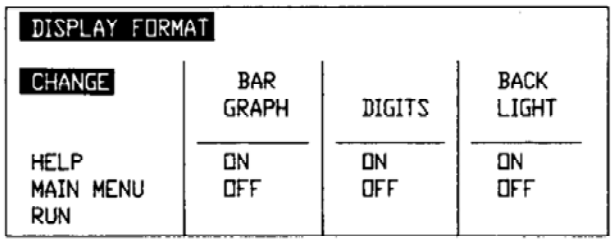

Figure IV-F
DISPLAY FORMAT Menu

IV-H SETUP SAVE-LOAD

A "SETUP" is the condition of the gaussmeter (RANGE settings, DISPLAY FORMAT, etc.) while the instrument is operating in the MEASURE mode. The gaussmeter can permanently store up to six separate machine set-ups. The purpose of SETUP SAVE-LOAD is to allow the user to program a setup for a particular application, for instance, measuring a batch of permanent magnets. This setup can be saved and later retrieved, instantly programming the gaussmeter without the need to re-enter all of the parameters via the MENU mode each time the gaussmeter is used. It should be remembered that the *present* machine SETUP is saved when the instrument is powered down and will be reinitialized to that SETUP when powered up again. See Section III-H for further information.

The six SETUPs are titled "A" thru "F." When REVIEW, SAVE or LOAD is chosen, the cursor will advance to the title column. At this point the "↑" or "↓" pushbuttons are used to select the desired SETUP title. At the same time the title's SETUP information block will appear on the right-hand side of the screen, allowing the user to view the programming information.

SECTION IV continued
Menu Operations/Gaussmeter Programming

The setup is then validated by the ENTER pushbutton. In the SAVE mode *the PRESENT machine setup will replace the setup that appears on the screen.* Care should be used in this mode to avoid unintentionally overwriting a setup. In the LOAD mode, the setup for the selected title *will replace the present machine setup.* REVIEW simply allows the user to view the information without affecting the setup.

Note that values generated by the PROBE ZERO and PROBE RELATIVE functions are *NOT* saved or loaded. The present values (if any) remain in effect. Also, if a loaded setup's range setting is inappropriate for the type of probe presently installed, the next valid range will be selected automatically. For example, if a setup contains a range setting of 3 G, and that setup is loaded in with a 10X probe, the 30 G range will be selected (3 G is not a valid range selection with a 10X probe.)

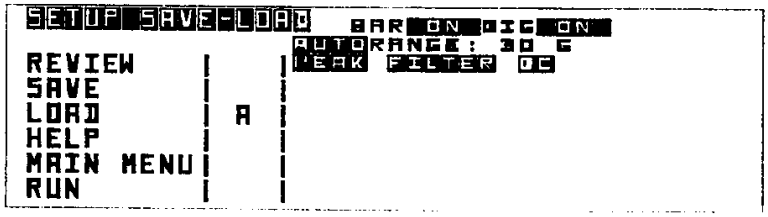

Figure IV-G
SETUP SAVE-LOAD Menu

IV-I PROBE ZERO

There are many factors that can affect the initial accuracy of a field reading. Probe offsets, circuit offsets and proximity to ferrous metals and electromagnetic fields (including the earth's) can result in field readings that are something other than zero when they should be zero.

The front panel of the gaussmeter contains a ZERO GAUSS CHAMBER which shields the probe from surrounding fields, leaving only errors due to probe and circuit offsets. With the probe placed in the ZERO GAUSS CHAMBER, these errors can be removed by "zeroing" the probe. Unlike most other MENU operations, the PROBE ZERO function requires the presence of a probe. The probe is zeroed *only* for the mode (ac *or* dc) that is presently programmed for the gaussmeter (via the MODE selection menu).

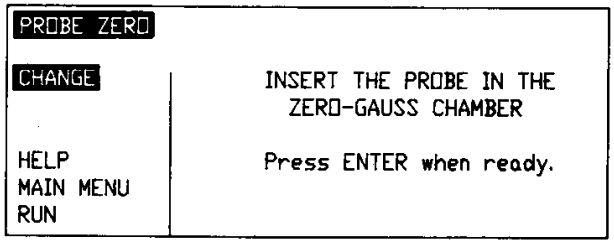

Figure IV-H
PROBE ZERO Menu

SECTION IV continued
Menu Operations/Gaussmeter Programming

Once selected, a message will appear that states that the gaussmeter is ready to begin. Pressing the ENTER pushbutton initiates the zeroing process. (If the probe is not present, an error message will appear instead. In this case, pressing the ENTER pushbutton will abort the zeroing operation.)

In the ac mode, the gaussmeter starts at the lowest valid range and zeroes the probe through each valid range. At each ac range, a digital correction factor is generated and stored.

Prior to storing a digital correction factor for the lowest dc range, the Model-9500 adjusts an offset suppression voltage at the input to the first amplification stage. The unit then proceeds to generate and store a digital correction factor for each dc range. If the probe offset is considered excessive (>300 G/30 mT), or the probe is removed from the zero chamber or disconnected during the zeroing processing, an error will be reported and all zero values generated to that point will be reset. In this case pressing the ENTER pushbutton will restore normal menu operations.

If the meter is able to cancel a majority of the signal but not all of it a warning message will appear but the meter will remain in its present state. In these instances the user should realize that future probe readings may not be entirel accurate because of the remaining uncancelled signal. The user should note the initial reading when returning to the RUN mode and subtract it from future readings.

Internally, ac and dc zeroing differs electronically. This difference is transparent to the user, but *does* affect one aspect of machine operation. The initial probe offset for the ac mode will affect the maximum reading that can be reached in a given range. For instance, if the initial ac offset is 20.00 G and the probe is operated (after zeroing) on the 30 G range setting, an overrange condition will occur when the field reading reaches 10.00 G (30.00 G - 20.00 G = 10.00 G.) This limitation does not exist for the dc mode of operation.

The internal zeroing values will remain in effect until the gaussmeter is turned off or the probe is rezeroed.

NOTE: Whenever a probe is zeroed, *all previously-generated relative values will be reset and the relative function will be turned off* (See Section IV-J).

IV-J PROBE RELATIVE

PROBE RELATIVE allows the probe to be "zeroed" in a non-zero magnetic field. This field then becomes the reference point for all future measurements. For example, if the relative field is +200.0 G and the probe is afterwards inserted in a +250.0 G field, the displayed reading will be +50.0 G. A field of +150.0 will be displayed as -50.0 G. Thus, the RELATIVE function can be useful for observing variances around a given field density.

Like the PROBE ZERO operation, the PROBE RELATIVE function requires the presence of a probe. The relative values are generated *only* for the mode (ac *or* dc) that is presently programmed for the gaussmeter (via the MODE SELECTION menu).

SECTION IV continued
Menu Operations/Gaussmeter Programming

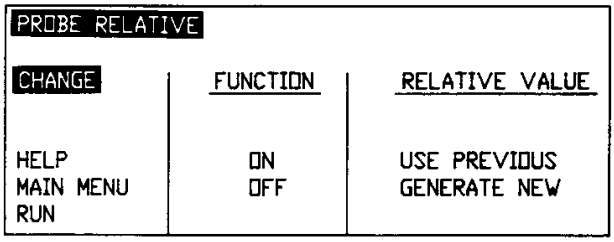

Figure IV-I
PROBE RELATIVE Menu

Once selected, the user has the choice of turning the relative function ON or OFF . Selecting OFF returns the gaussmeter display to actual field readings, rather than relative readings. Selecting ON engages the relative function and allows the user to either use previously generated relative values (USE PREVIOUS) or generate new values (GENERATE NEW). If the latter is selected, the following occurs:

A message will appear that states that the gaussmeter is ready to begin. Pressing the ENTER pushbutton initiates the relative operation. (If the probe is not present, an error message will appear instead. In this case, pressing the ENTER pushbutton will abort the relative operation.)

In the ac mode, the relative operation begins in the lowest valid range. If the existing field level exceeds this range, the next range is selected. This continues until a range is found that can accommodate the field level. *No relative values will be generated for those ranges that were exceeded.* At this point the relative field level reading is placed in the channel's information block preceded by a reverse-video "R," (See Figure III-A) for future reference, and relative values are generated for this and all higher ranges.

In the dc mode, the relative operation begins in the lowest valid range. If the existing field level exceeds this range, the next range is selected. This continues until a range is found that can accommodate the field level. At this point, the present field level reading is placed in the channel's information block for future reference and a relative value is generated for this range. The gaussmeter then downranges two ranges and continues the relative operation, generating a relative value for this and all higher ranges.

In either mode, if the probe is moved or disconnected during the relative operation, or if the reference field is extremely unstable, an error will be reported and all relative values generated to that point will be reset. In this case, pressing the ENTER pushbutton will restore normal menu operation.

If the meter is able to cancel a majority of the signal but not all of it a warning message will appear but the meter will remain in its present state. In these instances the user should realize that future probe readings may not be entirely accurate because of the remaining uncancelled signal. The user should note the initial reading when returning to the RUN mode and subtract it from future readings.

Internally, ac and dc relative operations differ electronically. This difference is transparent to the user, but *does* affect one aspect of machine operation. The initial field for the ac mode will affect the maximum reading that can be reached in a given range. For instance, if the initial relative ac field is 100.0 G and the probe is operated on a 300 G range setting, an overrange condition will occur when the field reading reaches 200.0 G (300.0 G-100.0 G= 200.0 G). This limitation does not exist for the dc mode of operation.

SECTION IV continued
Menu Operations/Gaussmeter Programming

When operating in the MEASURE mode, the value of the relative field (the field that existed before the relative operation was initiated) will appear in the information block preceded by a reverse-video "R." (See Figure III-A.) In the dc mode, the user can downrange up to two ranges to obtain better resolution of the variances around the original field. For instance, observing a 20 kG field *without* the RELATIVE function enabled allows only a resolution of ±10 G on the 30 kG range. However, if the RELATIVE function is used, the user can downrange to observe variances as low as ±0.1 G on the 300 G range. This is valid only for the dc mode. Attempts to downrange more than two ranges will result in an overrange condition.

NOTE: The probe should be zeroed (See Section IV-I) before performing the relative function or the relative values will also include probe and circuit offset errors. When a probe is zeroed, *all previously generated relative values will be reset and the relative function will be turned off*.

IV-K COMMUNICATIONS FORMAT

This menu allows the user to configure the communications ports.

If the IEEE-488 selection is made, the user is directed to select the device primary ADDRESS using the the "↑" or "↓" pushbutton. The selection is validated with the ENTER pushbutton. Legal addresses are 0 to 31 decimal. Refer to Section VI for further information on the IEEE-488 bus.

If RS-232 is selected, the user is directed to first select the PARITY (NONE, ODD or EVEN), then the character LENGTH (5, 6, 7 or 8 bits), then the number of STOP bits (1 or 1.5 if the LENGTH is 5 bits or 1 or 2 if the LENGTH is 6, 7 or 8 bits) and finally the BAUD rate (110, 150, 300, 600, 1200, 2400, 4800, 9600 or 19200 bits/second). In each case, the "↑" or "↓" pushbuttons are used to select a parameter and the ENTER pushbutton validates the selection. Refer to Section VI for further information on RS-232 communications.

NOTE: Changes made to the communications ports take effect immediately.

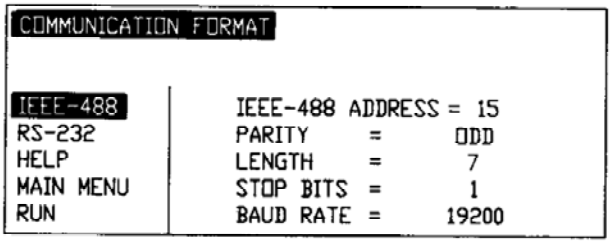

Figure IV-J
COMMUNICATIONS FORMAT Menu

SECTION IV continued
Menu Operations/Gaussmeter Programming

IV-L MENU OPERATIONS VIA REMOTE TERMINAL

Thus far, the instructions relating to gaussmeter programming have been limited to the use of the unit's front panel display and pushbuttons. Any operation that can be programmed from the front panel can be programmed from an RS-232 terminal connected directly to the gaussmeter or indirectly through a modem. This can be useful in situations that require the user and the gaussmeter to be separated by some distance.

This mode of operation is called the "MASTER" mode and should not be confused with the other mode of remote operation called the "SLAVE" mode (Section V). In the "MASTER" mode the *gaussmeter is controlling* the terminal, with the terminal's screen and keyboard duplicating the gaussmeter's front panel display and pushbuttons. In the "SLAVE" mode, the *gaussmeter is being controlled* by a remote device, typically a computer. The "SLAVE" mode is accessible from either the IEEE-488 bus or the RS-232 communications port, whereas the "MASTER" mode operates only from the RS-232 port.

See Section VI for the electrical interface connections.

Only three keys are used on the terminal's keyboard; the ENTER key, the CURSOR UP "↑" key and the CURSOR DOWN "↓" key. There is a one-to-one functional correspondence between these keys and the front panel pushbuttons. Thus any reference made in previous discussions to the up "^" pushbutton, for instance, can be replaced by the CURSOR UP "↑" on the terminal.

Some terminals may not have cursor control keys or may not generate the same ASCII codes as other terminals for the same function. Use the following table to clarify these situations. It is recommended that the user refer to the terminal's user manual for further information.

FUNCTION	ASCII	POSSIBLE KEY
ENTER	13	ENTER, RETURN, CTRL-M
UP	11/26	CURSOR UP, (↑), VTAB, CTRL-K, CTRL-Z
DOWN	10	CURSOR DOWN, (↓), LINEFEED, CTRL-J

The front panel display and pushbuttons operate in parallel with the terminal's screen and key board. Whatever is presently appearing on the gaussmeter's display will also appear on the terminal's screen though the format will be slightly different. Whether a selection is made via the front panel pushbuttons or the terminal's keyboard, both the terminal screen *and* the gaussmeter's display will be updated. It is even possible to alternate between keyboard and front panel pushbuttons to make selections.

NOTE: Since the COMMUNICATIONS FORMAT menu is accessible from the remote terminal, care should be taken not to change the RS-232 parameters without matching the new parameters on the terminal. Changes to the parameters take effect immediately so it is possible to sever communications in one keystroke. If this happens, the gaussmeter will have to be re-programmed from the front panel or the terminal's parameters will have to be modified to match the changes made.

SECTION V

REMOTE (SLAVE) MODE OPERATION

V-A OVERVIEW

The "SLAVE" mode of operation allows a remote device such as a computer system to control gaussmeter operations. Another mode of remote operation, the "MASTER" mode, in which the gaussmeter controls a remote terminal or hardcopy device, is discussed in Sections III and IV.

The "SLAVE" mode is available from either the IEEE-488 instrumentation bus or the RS-232 communications port. The operating characteristics of both ports can be programmed from the COMMUNICATIONS FORMAT menu (Section IV). The electrical interface is discussed in Section VI.

Most of the programmable aspects of the gaussmeter that are available in the MENU mode are also accessible in the SLAVE mode. Information regarding the nature of these operations can be found in Section IV. In addition, other functions are available that are not accessible in the normal manual operation of the gaussmeter.

V-B REMOTE (SLAVE) COMMANDS

The MASTER programs the gaussmeter by sending a series of ASCII character command strings and receiving a response string back from the gaussmeter.

In the following list of commands, all values within a command string are ASCII. Thus, a "3" is an ASCII '3,' which is 51 decimal, 33 hex, and not 03. The standard ASCII character set totals 128 characters, so if the RS-232 port is being used, the minimum character length must be 7 bits.

V-B(a) MODE SELECTION

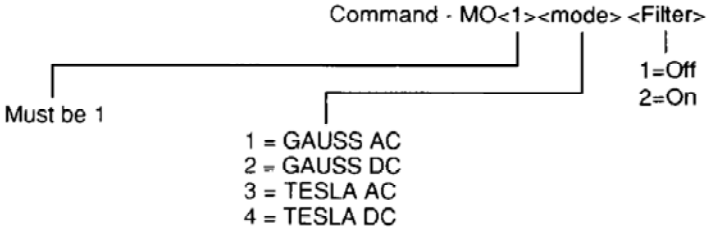

EXAMPLE: "MO132" programs the mode for TESLA AC, FILTER ON.

SECTION V continued
Remote (Slave) Commands

V-B(b) RANGE SELECTION

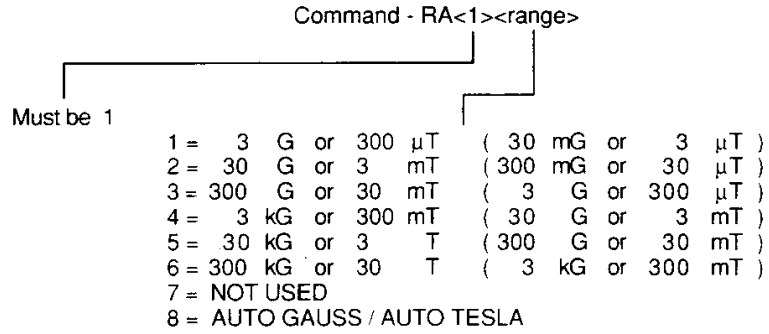

NOTE: The range units (GAUSS or TESLA) are determined by the MODE SELECTION command. The ranges shown in parenthesis ( ) are used when using a 0.01X probe.

EXAMPLE: "RA15" programs the range for 3 TESLA (assuming the MODE is set for TESLA with a 1X probe).

V-B(c) PEAK HOLD

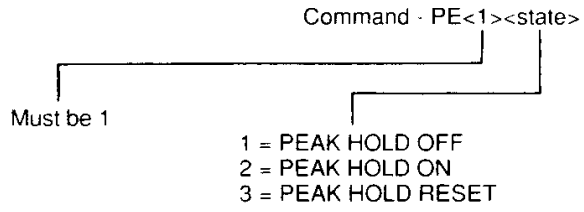

EXAMPLE: "PE11" turns PEAK HOLD off .

SECTION V continued
Remote (Slave) Commands

V-B(d) DISPLAY FORMAT

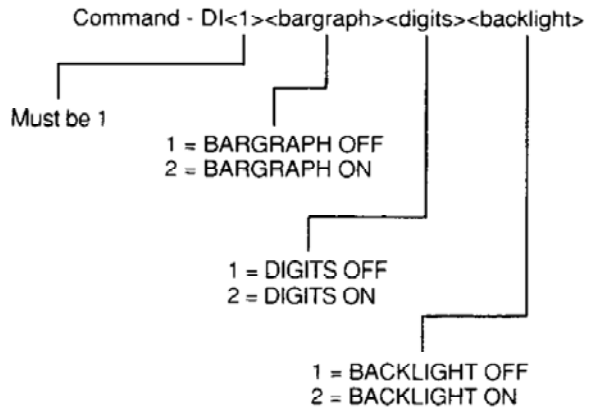

EXAMPLE: "DI1222" enables the bargraph and the digital reading and turns on the backlight.

V-B(e) COMMUNICATIONS FORMAT - IEEE-488

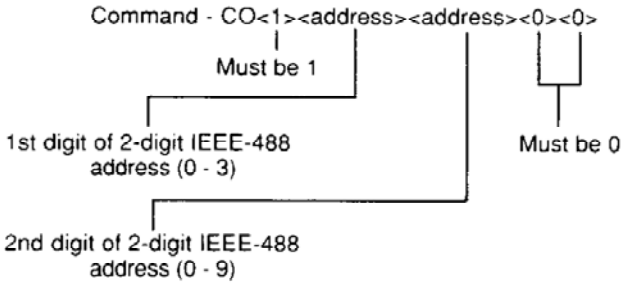

NOTE: Legal addresses are 00 - 31 (decimal).

EXAMPLE: "CO12500" sets an IEEE-488 address of 25.

WARNING: Improper use of this command can terminate communications between the remote device and gaussmeter. See Section V-E for more information.

SECTION V continued
Remote (Slave) Commands

V-B(f) COMMUNICATIONS FORMAT - RS-232

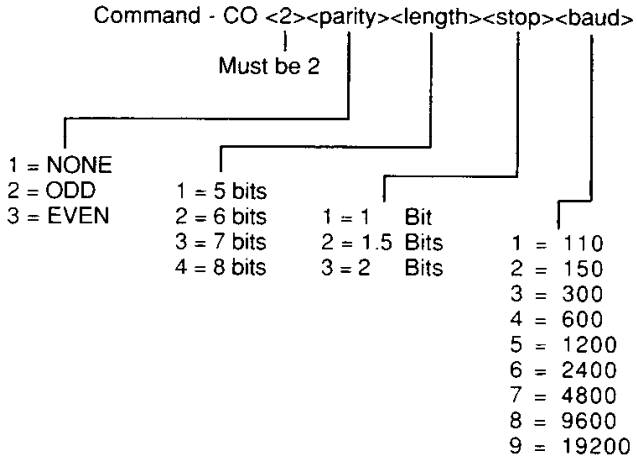

NOTE: Number of stop bits for a 5-bit character can only be 1 or 1.5. For all other character lengths, choose either 1 or 2 stop bits.

EXAMPLE: "CO21317" sets the RS-232 port for no parity, a 7-bit character, 1 stop bit and a baud rate of 4800.

WARNING: Improper use of this command can terminate communications between the remote device and gaussmeter. See Section V-F for more information.

V-B(g) SETUP SAVE LOAD

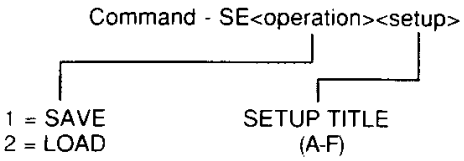

EXAMPLE: "SE1D" saves the present gaussmeter setup in SETUP "D."

SECTION V continued
Remote (Slave) Commands

V-B(h) PROBE ZERO

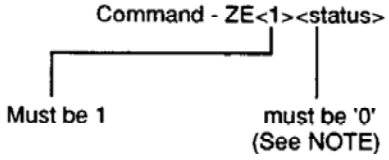

NOTE: The PROBE ZERO operation will start immediately, so the probe must be placed in ZERO GAUSS CHAMBER (or other desired zero field environment) before this command is issued. The "status" character must be '0' in the command string. If the PROBE ZERO operation is successful, the RETURNED command string (see Section V-D) will also have the "status" character set to '0'. If an error prevented a successful zeroing of the probe, "status" will be nonzero. See section IV-I for further information on zeroing errors.

EXAMPLE: "ZE10" zeroes the probe.

V-B(i) PROBE RELATIVE

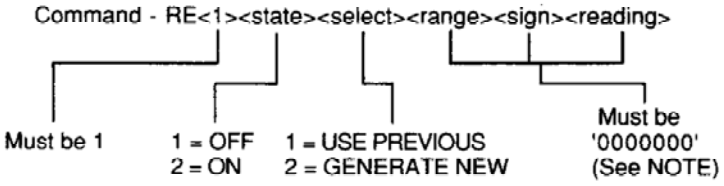

NOTE: The PROBE RELATIVE operation will start immediately, so the probe must be placed in the desired magnetic field environment before this command is issued. The "range," "sign" and 5-digit "reading characters must be '0' in the command string. If the "USE PREVIOUS" selection is made, or if a new relaive operation is invoked *and* if the PROBE RELATIVE operation is successful, the RETURNED command string (see Section V-D) will contain the following information:

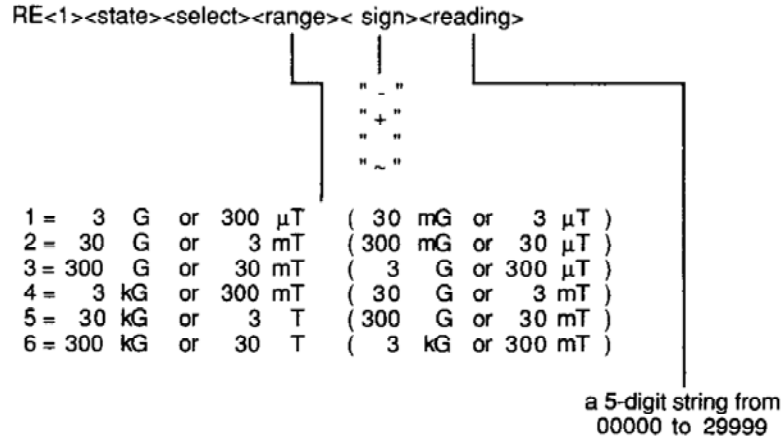

SECTION V continued
Remote (Slave) Commands

If an error prevented a successful relative operation *or* if the OFF state was selected, "range," "sign" and "reading" will be returned to '0000000.' See Section IV-J for further information on relative operation errors.

NOTE: The range units (GAUSS or TESLA) are determined by the MODE SELECTION command. If the gaussmeter has been programmed for the ac mode, the "sign" character will be a "~." The SPACE " " character will be returned if the reading is exactly 0 in the dc mode. The ranges shown in parenthesis ( ) are used when using a 0.01X probe.

EXAMPLE: "RE1220000000" starts the relative operation. If the relative field was -23.11 mT, the returned command string will be "RE1223-23110."

EXAMPLE: "RE1110000000" disables the use of the relative offset in the MEASURE mode. The returned command string will be the same.

V-B(j) MEASURE

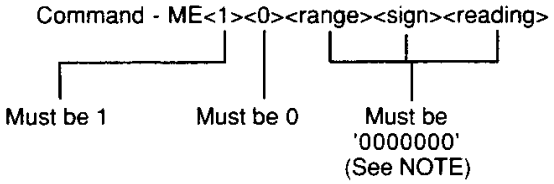

This command will measure the present field density.

NOTE: The MEASURE operation will start immediately, so the probe must be placed in the desired magnetic field environment before this command is issued. The "range," "sign," and 5-digit "reading" characters must be '0' in the command string. The RETURNED command string will contain the following field information:

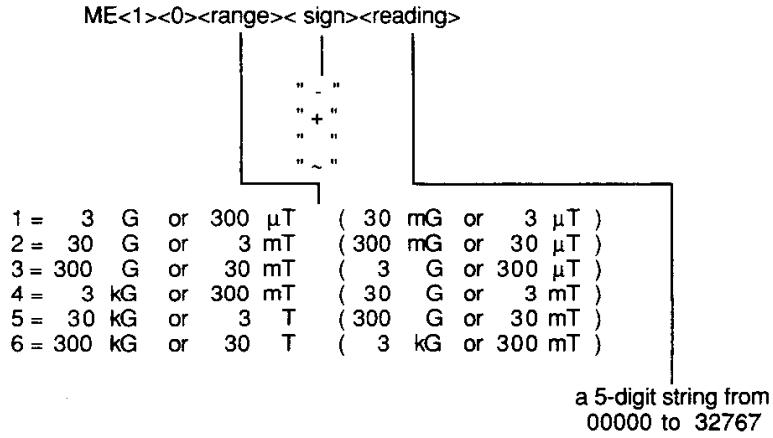

NOTE: The range units (Gauss or TESLA) are determined by the MODE SELECTION command. If the gaussmeter has been programmed for ac mode, the "sign" character will be a "~." The SPACE " " character will be returned if the reading is exactly 0 in the dc mode. Any reading greater than 29999 should be considered an overrange condition. The ranges shown in parenthesis ( ) are used when using a 0.01X probe.

SECTION V continued
Remote (Slave) Commands

EXAMPLE: "ME100000000" invokes a reading of the present field density. If the gaussmeter has been previously programmed for TESLA-AC, and a range of 3 T, the present field density is 1.2990 T, the returned command string will be "ME105~12990."

V-B(k) LOCKOUT

Command - LO<state>

1 = LOCKOUT OFF
2 = LOCKOUT ON
3 = LOCKOUT ON-DISPLAY OFF

SELECTION-2 allows the remote device to disable the gaussmeter's front panel pushbuttons. It has the same effect as asserting the REN (Remote Enable) control line on the IEEE-488 bus, by the system controller.

SELECTION-3 locks out the pushbuttons and disables the display, replacing the normal RUN mode screen with a "GAUSSMETER BEING CONTROLLED REMOTELY" message. In this mode field readings can be required at about twice the normal rate depending on the setup of the instrument. For instance, in the DC mode with functions such as peak hold turned off, the user can acquire up to eight readings per second using the IEEE-488 bus. Engaging functions such as peak hold will slightly degrade this rate.

When LOCKOUT is enabled, any attempt to use the front panel pushbuttons will result in a "GAUSSMETER BEING CONTROLLED REMOTELY" message to appear on the screen, reminding the user that the gaussmeter is being controlled remotely. *Also, as long as the lockout is enabled, the gaussmeter's MASTER mode will be disabled.* (SEE SECTION III-K)

The use of this command is highly recommended otherwise the gaussmeter setup can be changed locally without the remote device knowing about it, resulting in possible erroneous computations by the remote device.

V-B(l) CALIBRATE

Command - CA<state>

0 = Self calibration disabled
1 = Self calibration enabled
2 = Forced calibration

This command allows the user to regulate the internal recalibration cycle. As mentioned in Section III-L the internal recalibration cycle guarantees optimum performance and is initiated shortly after power-up, anytime a new probe is connected or any time the internal instrument temperature varies by more than 5 degrees C.

The possibility of an unexpected recalibration cycle (triggered by temperture) might be disruptive to some users. The CALIBRATE command can be used to control this situation. By disabling the recalibration cycle ("CA0") the gaussmeter will ignore temperature changes but will still recalibrate once after power-up and anytime a new probe is connected.

WARNING ! ! ! As long as the internal recalibration cycle is disabled accuracy cannot be guaranteed over temperature ! ! !

Enabling recalibration ("CA1") returns the gaussmeter to its normal mode of operation. The meter will recalibrate if the internal temperature changed by 5 degrees C or more over the period of time that self calibration was disabled.

A forced calibration ("CA2") will initiate a recalibration the next time the gaussmeter returns to the RUN mode. The meter will declare itself "busy" during recalibration. The use of this command does not affect the calibration state previously defined. For example if self calibration is disabled and then a forced calibration command is issued, the self calibration mode will remain disabled afterwards.

V-C COMMAND STRING ORGANIZATION

The gaussmeter can accept a command string of up to 1000 ASCII characters in length. The very first character in a command string, the "initiator," must be the ASCII ESCAPE <ESC> control character (27 decimal, 1B hex). The last character in the string, the "terminator," must be CARRIAGE RETURN <CR> (13 decimal, 0D hex).

Commands can be arranged in any order with one command following another. For example, to program the MODE for GAUSS-DC, the full command string would be:

<ESC>MO121<CR>

As another example, the following command string:

<ESC>MO121RA12PE11DI1221<CR>

programs the MODE to GAUSS-dc, the RANGE to 30 G, turns the PEAK HOLD function OFF and enables both the bargraph and the digital reading on the display as well as turning off the display backlight.

SECTION V continued
Remote (Slave) Commands

V-D COMMAND EXECUTION

The gaussmeter will not execute any of the commands in the command string until the final terminator character <CR> has been received (and the unit triggered if being controlled on the IEEE-488 bus (See Section V-E). It is the user's responsibility to limit the entire command string to 1000 characters or less *including* the initiator and terminator characters. Characters sent in excess of this limit will be ignored until the terminator is received.

It should be noted that if an initiator <ESC> character is received in the middle of a command string, all previous characters will be ignored and the gaussmeter will start over, ready to accept another 999 characters. A transmission such as:

<ESC>MO121<ESC>RA12<CR>

will be processed as though the transmitted command string was:

<ESC>RA12<CR>

Once the terminator is received, (and the unit triggered if being controlled by the IEEE-488 bus) commands are executed in the order they were received. Thus a RANGE command such as:

<ESC>RA12RA14<CR>

will first program for a range of 30 G and then for 3 kG, and has the same result as a command string of:

<ESC>RA14<CR>.

The gaussmeter will not accept any new commands until the present commands have been executed. When the final command has been executed, *the gaussmeter will transmit the command string back to the remote device*. The echoed string will contain all received characters *except* the initiator <ESC>. Thus, if the command string sent to the gaussmeter looked like this:

<ESC>RA14<CR>

the string sent back will look like this:

RA14<CR>.

The reception of the echoed command string indicates to the remote device that all commands were executed and the gaussmeter is ready to accept a new set of commands. In some cases the contents of the returned commands will contain information pertinent to the requested operation, such as the execution status of the PROBE ZERO operation or the value of the relative field in the PROBE RELATIVE operation. See Section V-B.

SECTION V continued
Remote (Slave) Commands

The gaussmeter checks each command for validity before it is executed. If the gaussmeter detects a command containing errors, whether due to a transmission error or a programming error, *the gaussmeter will terminate the command string processing.* However, all commands previous to the one with errors will be executed. In this situation, the gaussmeter will transmit an abbreviated version of the original command string back to the remote device, ending at the point where the error was detected. This string, then, can be used to pinpoint errors in the user's program or to verify that all commands were indeed executed.

For example, the following command string contains an error:

<ESC>MO121DI1131RA16<CR>.

In the DISPLAY FORMAT command (DI1131), the "3" is not a valid selection. In this case, the gaussmeter will execute the MODE command, terminate processing and send back the following string:

MO121DI113<CR>

indicating that the MODE SELECTION command was executed but the DISPLAY FORMAT and RANGE SELECTION commands were not, due to an error in the DISPLAY FORMAT command.

V-E IEEE-488 IMPLEMENTATION

See Section VI for electrical information on the IEEE-488 bus.

When the gaussmeter is busy executing commands, performing diagnostics or recalibrating internal circuits, the serial poll register's DI01 bit will be set and all other bits reset as follows:

DI08	DI07	DI06	DI05	DI04	DI03	DI02	DI01
0	0	0	0	0	0	0	1

The user should always wait for a "NOT BUSY" condition before issuing commands to the gaussmeter.

When the host system's bus controller sends a command string to the gaussmeter, the gaussmeter must be programmed as a listener at the gaussmeter's preprogrammed primary address (via the COMMUNICATIONS FORMAT menu). It is not necessary to assert the EOI (End of Identify) control line when the final terminator character is transmitted, *but the GET (Group Execute Trigger) command MUST be issued by the system controller before the gaussmeter will begin executing the command string.*

When the gaussmeter is ready to return the command string, it will assert the SRQ (Service Request) line. The serial poll status register will have its 'rsvt' bit (DIO7) set and all other bits reset as follows:

DIO8	DIO7	DIO6	DIO5	DIO4	DIO3	DIO2	DIO1
0	1	0	0	0	0	0	0

SECTION V continued
Remote (Slave) Commands

The gaussmeter must then be programmed as a talker before it will transmit the command string back to the host. The gaussmeter *will* assert the EOI line when the final terminator character is transmitted.

When the gaussmeter is first powered on, its IEEE-488 interface will be disabled for about 40 seconds while the gaussmeter performs internal diagnostics and configuration. Assertion of the REN (Remote Enable) line by the system controller has the same effect as issuing the LOCKOUT command.

Issuing the COMMUNICATIONS FORMAT command to modify the IEEE-488 device address can have disastrous results if not properly used. If this parameter is changed, the system controller's address reference must be changed to match the new address or *the communications link can be severed*! Remember that the command string sent to the gaussmeter will not be executed until the final terminator character is received. When the COMMUNICATIONS FORMAT command is processed and executed, the change takes effect immediately. The gaussmeter will return the command string using the *new* IEEE-488 address.

V-F RS-232 IMPLEMENTATION

See Section VI for electrical information on the RS-232 port.

NOTE: It is important to remember that the gaussmeter returns to the MASTER mode once it executes a SLAVE command. This means that the gaussmeter will resume transmission of the MASTER mode data table immediately after sending back the SLAVE response. If the user's program is not perpared for this, the SLAVE response may be lost. To prevent this issue the LOCK OUT-ON command before starting SLAVE operations. This command (Section V-B (k)) terminates the MASTER mode. From this point on the only information transmitted by the gaussmeter will be the SLAVE response. The MASTER mode can also be disabled by adding a jumper to the RS-232 cable. See Section VI.

Issuing the COMMUNICATIONS FORMAT command to modify the RS-232 port characteristics can have disastrous results (the loss of communications) if not properly used. If any of the parameters are changed, the host DTE's parameters must be changed to match the new characteristics *or the communications link will be severed.* Remember that the command string sent to the gaussmeter will not be executed until the final terminator character is received. When the COMMUNICATIONS FORMAT command is processed and executed, the changes take effect immediately. The gaussmeter will return the command string using the *new* RS-232 characteristics.

When the gaussmeter is first powered on, its RS-232 interface will be disabled for about 40 seconds while the gaussmeter performs internal diagnostics and configuration. During this time, the gaussmeter will not accept commands and will drop the RTS (Request To Send) and DTR (Data Terminal Ready) lines until the interface is activated.

SECTION VI

COMMUNICATIONS INTERFACE

VI-A RS-232 PORT FUNCTIONAL DESCRIPTION

The gaussmeter, like most terminals, printers and computers, is considered a DTE (Data Terminal Equipment). A modem is a DCE (Data Communications Equipment). The MODEL-9500 gaussmeter's RS-232 port is implemented on a standard 25-pin female "D" connector. Only 9 of the 25 pins are actually used, as shown in figure VI-A.

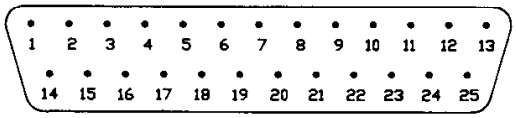

PIN	SIGNAL NAME	PIN	SIGNAL NAME
1	EARTH GROUND	14	
2	TRANSMITTED DATA (Tx)	15	
3	RECEIVED DATA (Rx)	16	
4	REQUEST TO SEND	17	
5	CLEAR TO SEND	18	
6	DATA SET READY	19	
7	LOGIC GROUND	20	DATA TERMINAL READY
8		21	
9		22	RING INDICATOR
10		23	
11		24	
12		25	
13			

Figure VI-A
RS-232 "D" Connector

Pin-1: Earth Ground — This line connects to the gaussmeter chassis which is connected to the center terminal of the line cord power receptacle. The use of this pin is optional and is normally tied to the shield of a shielded multiconductor cable to minimize RFI/EMI radiation problems. *DO NOT CONNECT THIS EARTH GROUND TO THE COMMON RETURN LINE (Pin-7)!*

Pin-2: Transmit Data (TX) — This line carries serial data *from* the gaussmeter *to* the host DTE.

Pin-3: Receive Data (RX) — This line carries serial data *to* the gaussmeter *from* the host DTE.

Pin-4: Request to Send (RTS) — The gaussmeter asserts this line to indicate that it can accept data from the host DTE.

Pin-5: Clear to Send (CTS) — The host DTE asserts this line to indicate that it can accept data from the gaussmeter.

Pin-6: Data Set Ready (DSR) — The host DTE asserts this line to indicate that the DTE is operative.

SECTION VI continued
Communications Interface

Pin-7: Logic Ground (GND) — This is the common return line for all other signals *except* earth ground (Pin-1).

Pin-20: Data Terminal Ready (DTR) — The gaussmeter asserts this line to indicate that it is operative.

Pin-22: Ring Indicator (RI) — This pin can be used to disable the MASTER mode by connecting this pin to PIN-20 (DTR). Otherwise leaving "RI" disconnected enables normal MASTER mode operation.

The characteristics of the serial data stream, baud rate, number of stop bits, character length and parity, are programmed from the COMMUNICATIONS FORMAT menu. See Section IV.

VI-B RS-232 ELECTRICAL INTERFACE/HANDSHAKING

On a gaussmeter-to-DCE connection, all like lines are connected together: "TX" to "TX," "RX" to "RX," "CTS" to "CTS," etc. On a gaussmeter-to-DTE connection, lines have to be "crossed" for the interface to work. Figure VI-B depicts this difference.

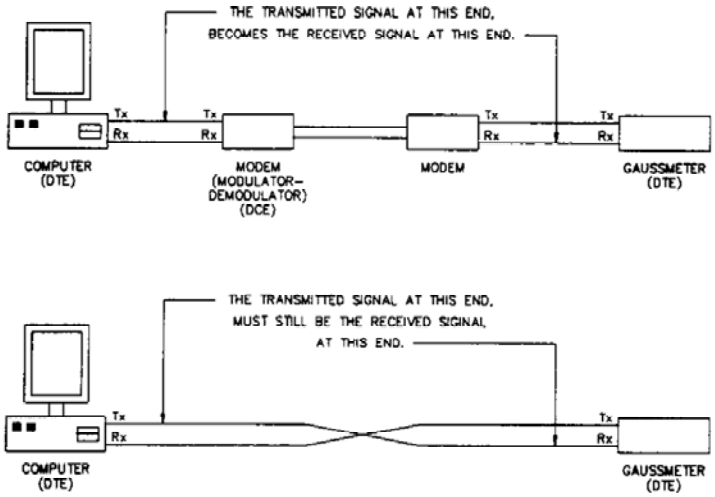

Figure VI-B
DTE and DCE Interface

In most cases, the connection will be a gaussmeter-to-DTE arrangement with the DTE being a printer or terminal in the gaussmeter's "MASTER" mode of operation or a computer in the "SLAVE" mode. These modes are discussed in Sections III , IV and V.

SECTION VI continued
Communications Interface

The gaussmeter supports two types of handshaking: hardware and software. Handshaking controls the flow of information between the two devices. A typical example of the need for handshaking would be a gaussmeter-to-printer connection. Usually a printer cannot print data at the rate at which it is received. Most modern printers contain a certain amount of "buffer" memory used to store incoming data. But if, for instance, data is arriving at a rate of 1000 characters per second and the printer can only print 10 characters per second, the buffer will eventually overflow. To prevent this from happening, the printer will signal the gaussmeter to stop transmitting until it has time to "catch up."

There may be instances, particularly in the gaussmeter's "SLAVE" mode, when the gaussmeter cannot respond quickly enough to incoming data from a remote computer. When this happens, the gaussmeter will signal the remote device to stop momentarily until the data can be processed.

The electrical interconnection that supports hardware handshaking is shown in Figure IV-C. Note that a connection is made to Pin-8 (Data Carrier Detect or DCD). This line is not supported on the gaussmeter, but may be on the DTE. However, making the connection at both ends makes the cable symmetrical and guarantees proper operation no matter which end is plugged into the DTE.

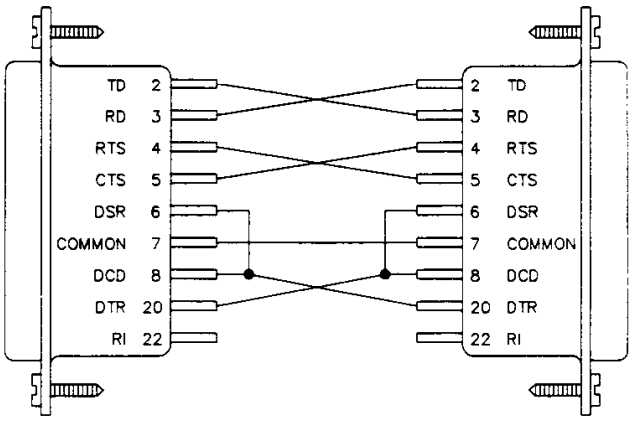

Figure VI-C
RS-232 Connection With Handshaking

For devices that implement software handshaking, or in applications where the response time of the DTE and gaussmeter are equal, the connection in Figure VI-D *must* be used.

SECTION VI continued
Communications Interface

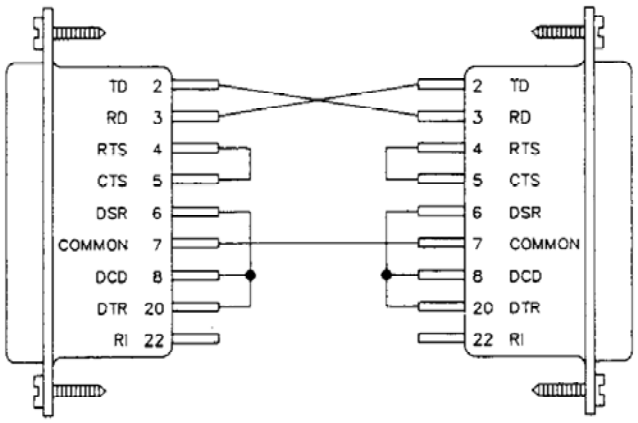

Figure VI-D
RS-232 Connection Without Handshaking

Software handshaking involves the use of two ASCII control characters "XOFF" to stop a transmission, and "XON" to resume. The ASCII control code for "XOFF" is 19 decimal (13 hex) and that for "XON" is 17 decimal (11 hex).

To stop an incoming transmission from the remote device, the gaussmeter will transmit an "XOFF" *and* set its RTS line FALSE. Likewise, the gaussmeter will accept an "XOFF" or FALSE CTS, or both, from the remote device to stop its own transmission. Note that if the signal to stop occurs in the middle of a character, the transmission of *that* character will finish to completion.

VI-C IEEE-488 BUS FUNCTIONAL DESCRIPTION

The IEEE-488 (GPIB) instrumentation bus follows the ANSI/IEEE 488-1978 conventions for programmable instrumentation. The IEEE-488 bus allows up to 15 instruments to be connected together in a "daisy chain" fashion and, under certain conditions, can support data transfer rates up to 1 million bytes/second.

Any device connected to the bus is capable of acting in any of three basic roles: controller, talker and listener. As a controller, the device dictates which devices act as talkers and listeners. There is only one controller at any given time, called the "system controller." As a talker, the device sends device-dependant data across the bus, but only when commanded to do so by the controller. As a listener, the device receives device-dependant data from a talker. There can be many listeners at any given time. The MODEL-9500 gaussmeter can act as a talker or a listener.

The bus is implemented on a standard 24-pin connector, as shown in Figure VI-E.

SECTION VI continued
Communications Interface

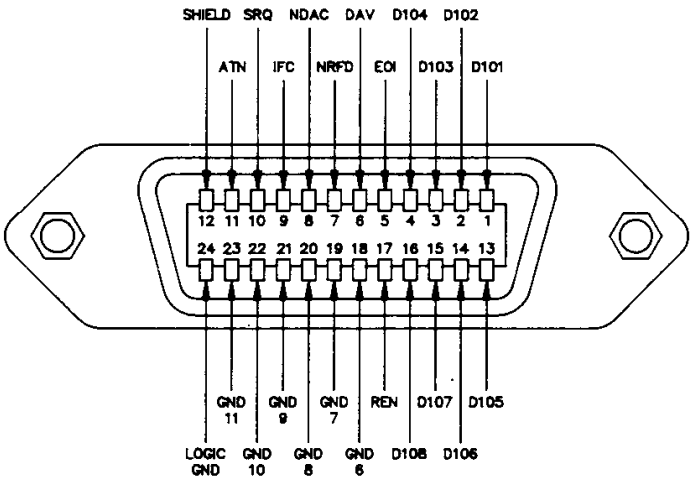

Figure VI-E
IEEE-488 Connector

Pin-1,2,3,4,13,14,15,16: Data (DIO)	These are the eight data lines DIO1 through DIO8 respectively.
Pin-5: End or Identify (EOI)	The line is normally asserted by a talker to indicate the end of a multiple byte data transfer. When EOI is asserted along with ATN (Attention), it indicates that the controller is conducting a parallel poll.
Pin-6: Data Available (DAV)	This line is asserted when a talker puts a data byte on the bus.
Pin-7: Not Ready for Data (NRFD)	This line is asserted by a listener until it is ready to accept a data byte.
Pin-8: Not Data Accepted (NDAC)	This line is asserted by a listener until it has accepted a data byte.
Pin-9: Interface Clear (IFC)	Asserted by the system controller to force all other devices to go idle.
Pin-10: Service Request (SRQ)	This line can be asserted by any device requiring service.
Pin-11: Attention (ATN)	Asserted by the controller to indicate that the byte on the data bus is an interface command.

SECTION VI continued
Communications Interface

Pin-12: Earth Ground	This line connects to the gaussmeter chassis which is connected to the center terminal of the line cord power receptacle. The use of this pin is optional and is normally tied to the shield of a shielded multi-conductor cable to minimize RFI/EMI radiation problems. *DO NOT CONNECT THIS EARTH GROUND TO THE COMMON RETURN LINES (Pins -18 thru 24)!*
Pin-17: Remote Enable (REN)	Asserted by the system controller to tell the systems receiving data that they can actually use the data, and that their front panel controls are locked out.
Pin-18,19, 20, 21, 22, 23, 24 Ground (GND)	These are the common return lines for all other signals *except* earth ground (Pin-12).

Each device on the system bus must be assigned a unique address ranging from 00 to 31 decimal. All devices can have one primary and another secondary address. Many devices, including the MODEL-9500, use the same address for both. The address is assigned using the COMMUNICATIONS FORMAT menu. See Section IV.

VI-D IEEE-488 ELECTRICAL INTERFACE

The interface between each device is straightforward. Each interface line attaches to the same line on the next device (ATN to ATN, DIO1 to DIO1, etc.)

SECTION VII

DIAGNOSTIC ERROR CODES

VII-A DIAGNOSTIC OVERVIEW

Upon power-up, the gaussmeter verifies that all internal components are operating correctly before field measurements begin. This includes the probe.

If a ***major*** error occurs, the gaussmeter will halt operations until the problem is rectified. A ***major*** error is one that prevents the gaussmeter from producing accurate field measurements.

If a ***minor*** error occurs, the gaussmeter will inform the user, but will continue to initialize the remaining electronics and begin field measurements. A ***minor*** error is one that does not affect field measurements, such as a failure in communications, setup storage and so on.

VII-B POWER-UP SEQUENCE

When the gaussmeter is first turned on, the display's backlight will turn on and the "F.W. BELL" logo will appear. Beneath the logo will appear messages indicating the state of the power-up procedure with the first being "INTERNAL DIAGNOSTICS IN PROGRESS." At this point, three paths are possible:

1) If no errors are found, the gaussmeter will retrieve calibration data from the probe, initialize the internal electronics and enter the MEASURE mode of operation.

2) If a ***minor*** error is detected, the "INTERNAL DIAGNOSTICS IN PROGRESS" message will be replaced with a "MINOR DIAGNOSTIC ERROR - xxxxx" message. The "xxxxx" is a five-digit number indicating the type of failure. Refer to Section VII-C. The message will be held for a short period of time to allow the user to record the error code. The gaussmeter will then proceed as it does if no errors are found (Item-1 above).

3) If a ***major*** error is detected, the "INTERNAL DIAGNOSTICS IN PROGRESS" message will be replaced with a "MAJOR DIAGNOSTIC ERROR - xxxxx" message. The "xxxxx" is a five-digit number indicating the type of failure. Refer to Section VII-C. The gaussmeter will halt operations at this point.

The procedure just described assumes that the basic core of the gaussmeter, the processor, display and digital power supply, is operational. If a catastrophic error prevents any of these from operating, the power-up procedure will not be executed, and the MEASURE mode will not be entered. This is typically accompanied by a blank display or one that contains illegible characters and patterns.

VII-C DIAGNOSTIC ERROR CODES

The 5-digit ***major*** and ***minor*** error codes help to pinpoint a failure within the various sections of the gaussmeter. The first digit indicates which subsection failed, with the remaining four digits providing precise information about the failure. Typically, only the first one or two digits are of any practical value to the user. The remaining information provides F.W. Bell with component-level information. *The user should not attempt to make component-level repairs. Field repairs should be limited to subassembly replacements only.* Returned

SECTION VII continued
Diagnostic Error Codes

assemblies should have with them the error code and a brief description of the problem.

VII-C(a) ERROR 0xxxx, ERROR 1xxxx

These MAJOR errors indicate a failure on the PROCESSOR CARD (item #201525).

VII-C(b) ERROR 2xxxx

This MAJOR error indicates a failure of the POWER SUPPLY CONTROLLER CARD (item #201527) or the LINE VOLTAGE INPUT TRANSFORMER ASSEMBLY (item #201528).

VII-C(c) ERROR 34xxx

This MINOR error indicates a failure on the PROCESSOR CARD (item #201525) that prevents operation of the RS-232 communications port.

VII-C(d) ERROR 35xxx

This MINOR error indicates a failure on the PROCESSOR CARD (item #201525) that prevents operation of the IEEE-488 interface bus.

VII-C(e) ERROR 36xxx

This MINOR error indicates a failure on the PROCESSOR CARD (item #201525) that prevents the gaussmeter's setup information from being stored permanently.

VII-C(f) ERROR 44xxx

This MINOR error indicates a failure on the RS-232 OPTION CARD (item #119525) that prevents operation of the RS-232 communications port.

VII-C(g) ERROR 45xxx

This MINOR error indicates a failure on the IEEE-488 OPTION CARD (item #119526) that prevents operation of the IEEE-488 interface bus.

VII-C(h) ERROR 51xxx

This MAJOR error indicates a failure in the ANALOG CARD (item #201526).

VII-C(i) ERROR 61xxx

This MAJOR error indicates a failure in the probe. Replace the probe.

SECTION VIII

MODEL-9500 THEORY OF OPERATION

VIII-A POWER SUPPLY

Refer to the block diagram. The power supply section of the MODEL-9500 gaussmeter consists of two electrically-isolated supplies; one for the digital section and the other for the analog section with one common line voltage step-down transformer. The components for both supplies, with the exception of a high-current bridge rectifier and the transformer, reside on the POWER SUPPLY CONTROL CARD. Interconnection between this card and the transformer/rectifier assembly is accomplished with a multiple contact, high current connector. Power is routed to the processor card and analog card in the same way.

The digital supply is used primarily by the PROCESSOR CARD and by the optocoupler components on the analog card. The supply delivers 3.0 A at +5.0 V, and is protected by overcurrent and overvoltage sense circuits.

The analog supply delivers +5.0 V at 0.67 A, ±15 V at 0.4 A each, and 24 Vac at 0.15 A at the line frequency. The +5 V supply is also used by the optocoupler components on the PROCESSOR CARD. The +15 V supply tracks the -15 V supply.

Linear designs are used throughout to provide low ripple power to those sections responsible for conditioning the low-level signals associated with Hall devices and the high-resolution A/D converters. To reduce ground loop and ground noise problems, each card has its own private power supply lines. All return (ground) lines tie to one common point on the POWER SUPPLY CONTROL CARD.

Operation from 115 Vac or 230 Vac line voltage is selected by "programming" the line voltage input receptacle on the rear panel of the gaussmeter, which reconfigures the electrical arrangement of the primary side of the transformer. This receptacle also contains the line fuse. The center terminal of the receptacle is tied to the metal frame of the chassis.

VIII-B PROCESSOR CARD

Refer to the block diagram for the PROCESSOR CARD. On this card is a 10 MHz 8088 microprocessor, 128k bytes of program ROM, 256k bytes of dynamic RAM, 512 bytes of non-volatile EEPROM and the various support components required for timing and interrupt processing. The 240 x 64 dot matrix LCD is controlled by a graphics display controller under the direction of the 8088. The display controller uses an 8k byte static RAM to store screen information. Most components are of the high speed, low power CMOS type to reduce the demands on the gaussmeter's power supply.

The +5 V digital power supply is converted to ±10 Vdc for the display module and to 90 Vac/400 Hz for the display backlight. Interconnection to both the display module and the pushbutton switches is made through multiple-contact connectors on the front end of the PROCESSOR CARD.

The interface to the analog card is completely isolated using high-speed optocouplers. This reduces noise in the sensitive analog sections by separating the high-noise switching environment of the digital section from the low-noise steady state conditions in the analog sections. To control the various functions on the analog card, a bit-mapped scheme is used. The processor can access 64 individual control lines, as well as lines that control the transfer of serial data from the analog card's A/D converter. The serial data

SECTION VIII continued
Model-9500 Theory of Operation

stream is converted to 16-bit wide parallel data before being transferred to the processor. Each conversion generates an interrupt to the processor.

The processor can access the RS-232 and IEEE-488 communications cards (optional) via two multi-pin connectors on the rear of the PROCESSOR CARD.

VIII-C RS-232 CARD

The RS-232 communications port is controlled by a programmable asynchronous communications element. This component generates the proper baud rate timing and line characteristics for the full duplex operation of the port. The serial data and control line logic levels are converted to the appropriate RS-232 levels by several line translation devices. The lines terminate at the 25-pin "D" connector . The communications controller can be programmed to generate a private interrupt to the processor card for various conditions of the port.

VIII-D IEEE-488 CARD

The IEEE-488 (GPIB) bus is controlled by a programmable GPIB interface controller. The controller handles the many activity states of the IEEE-488 protocol. The data and control lines from the GPIB controller interface to the bus through several GPIB line transceivers. These lines terminate at the 24-pin IEEE-488 connector. The controller can be programmed to generate a private interrupt to the processor card for various conditions on the bus.

VIII-E ANALOG CARD

The ANALOG CARD converts the low-level analog signals from the probe to high-accuracy digital information that can be manipulated by the processor section of the gaussmeter.

The processor-to-analog interface is completely isolated using optocouplers to minimize noise. The logic section of the card decodes the bit-mapped information from the processor to produce individual control and status lines. The control lines are used to select amplifier range settings, magnitude and type of Hall device control current, the A/D input source, suppression (dc zeroing) network range settings, the magnitude and phase of suppression voltage, probe input impedance matching and various calibration sources. Several other lines control the flow of serial data from a monolithic 16-bit A/D converter.

All clock lines used by the card are synchronized with the master clock lines in the digital section of the gaussmeter. This reduces switching noise and prevents harmonics and beat frequencies that could deteriorate the overall performance of the gaussmeter.

The ANALOG CARD contains a 512-byte non-volatile EEPROM device programmed with the card's operating characteristics; frequency response, offset information, temperature coefficients, etc.

When measuring alternating (ac) fields, the card is configured to provide a constant dc current to the Hall device in the probe. The magnitude of the current depends on the type of probe being used (bulk or thin film) and the present range of the gaussmeter. The voltage output of the Hall device is instantaneously proportional to the magnetic flux density being measured.

SECTION VIII continued
Model-9500 Theory of Operation

This signal is ac-coupled into the first amplifier stages, converted to a proportional dc level by a true rms converter, and finally converted to a digital value.

When measuring steady-state (dc) fields, the card generates a 5 kHz constant ac (sinusoidal) current to the Hall device. Again the magnitude of the current depends on the type of Hall device and the present range. The voltage output from the Hall device is an amplitude-modulated sinewave proportional to the flux density being measured. This signal is ac-coupled into the first amplifier stages, converted to a proportional dc level by a synchronous demodulator and finally converted to a digital value.

The card provides a calibrated analog output to its rear-panel BNC connector. In the ac mode, the signal is the actual field density wave form calibrated to 3 Vrms full scale. In the dc mode, the signal is a dc level calibrated to ±3 Vdc full scale. These signals represent the raw (uncorrected) waveforms produced by the Hall devices.

VIII-F 4TH GENERATION HALL GENERATOR PROBE

The F.W. Bell 4th generation probe assembly consists of a Hall generator probe element terminated by a 9-pin circular, non magnetic twist-lock connector. The connector houses a 512-byte non-volatile EEPROM device programmed with the probes cal factor and field amplitude linearity, as well as the serial number, date code and device type information for the assembly. Space is also provided to install a linearizing resistor when required.

Four of the connector pins interface to the Hall device itself. Another four control the transfer of information to the EEPROM. The remaining pin is used by the processor to sense if the probe is physically connected to the gaussmeter.

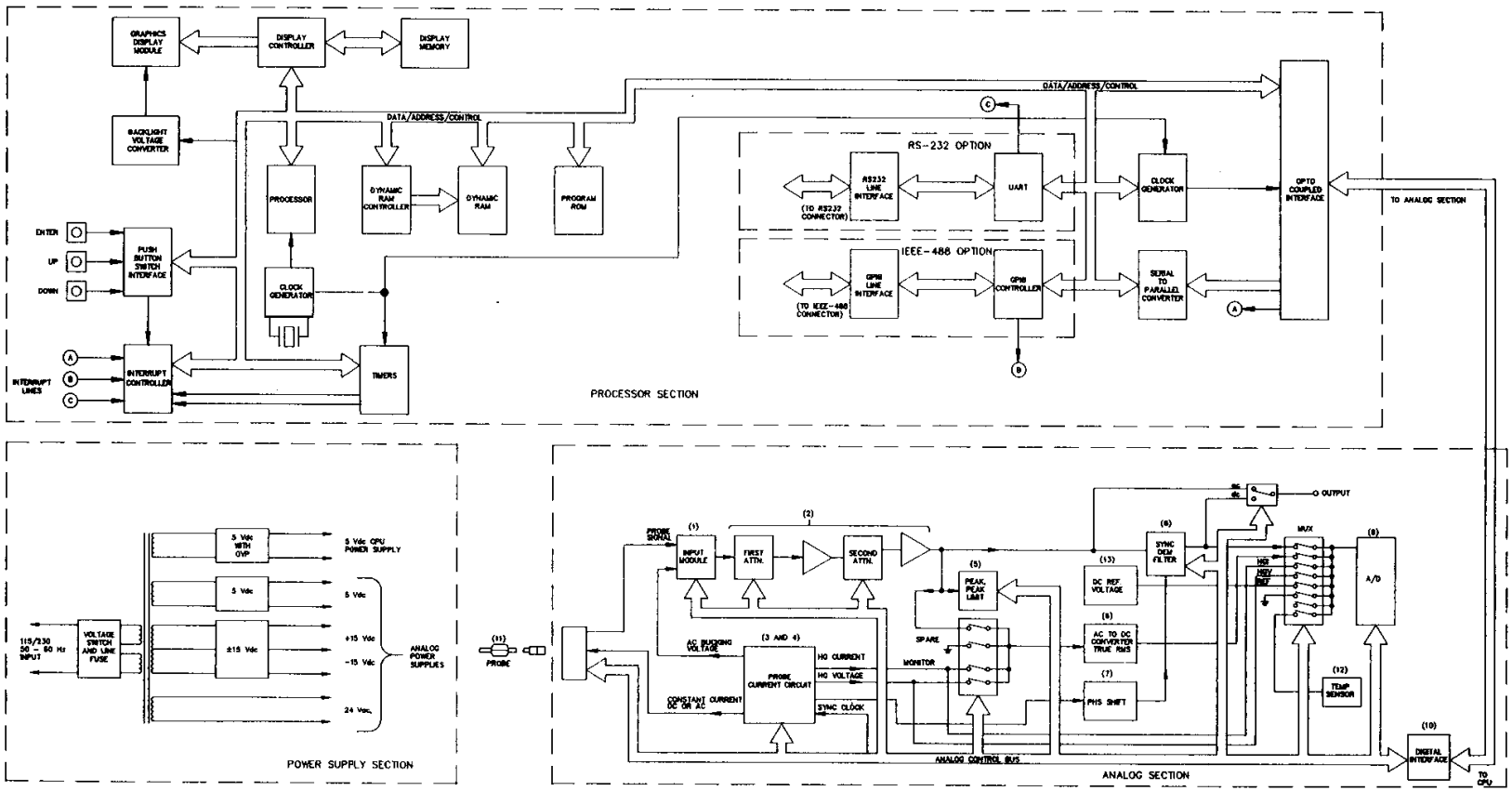

(1) INPUT CKT. - DIFFERENTIAL (BALANCED)

(2) AMPLIFIER / ATTEN. CKT.

(3) CURRENT SOURCE AC CKT. - 1mA, 2mA, 10mA, 20mA, 50mA, 100mA.

(4) CURRENT SOURCE DC CKT. - 1mA, 2mA, 10mA, 20mA, 50mA, 100mA.

(5) PEAK DEFECT, PEAK LIMIT CKT.

(6) TRUE RMS CONVERTER

(7) PHASE SHIFT CKT.

(8) SYNCHRONOUS DEMODULATOR, FILTER

(9) A/D CKT.

(10) DIGITAL INTERFACE

(11) PROBE, CONTAINS HALL GEN AND E^2 PROM

(12) TEMPERATURE SENSOR, APPROX. 10mV/°C

(13) VOLTAGE REF. 2.5V DC

BLOCK DIAGRAM, MOD.9500

UD-4997

SECTION IX

INSTALLATION OF OPTIONS

IX-A INSTALLATION OF COMMUNICATIONS PORT OPTIONS

You will need the following tools: a small flat blade screw driver, small Phillips blade screwdriver, 3/16" wrench (open ended or spin) for the RS-232 option (Item # 119525), or a 9/32" wrench (open ended or spin) for the IEEE-488 option (Item # 119526).

1) Remove power cord from ac line input socket.

2) Turn instrument around to view rear panel and remove the four access screws securing the rear panel to the case. (Refer to Figure IX-A)

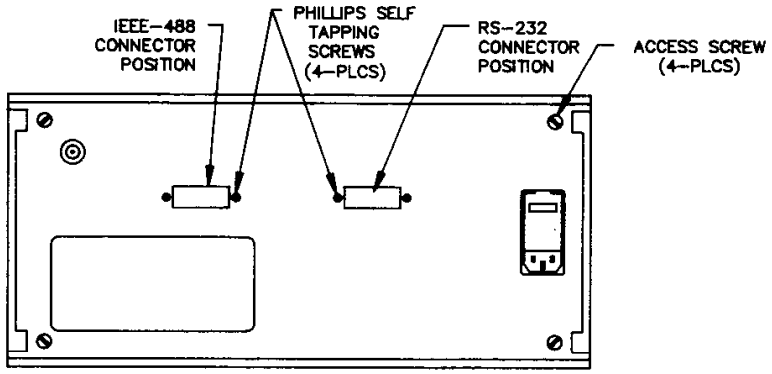

Figure IX-A
Model 9500 Rear Panel

3) Carefully pull rear panel out from rear of case far enough to gain access to inside of instrument. (Do not apply unnecessary strain on wiring between the instrument and connectors mounted on rear panel.)

4) Remove the cover plate or plates (as required) from the rear panel by removing the two Phillips self-tapping screws that secure each plate to the rear panel.

5) Install communications card connector with PCB into proper position on back side of rear panel and secure using jackscrews and appropriate hardware supplied with option card.

6) Insert the 26-PIN connector that is attached to the ribbon cable fully into the appropriate mating connector inside the instrument. (Note: Viewed from the rear, the RS-232 Connector is on the left; the IEEE-488 is on the right, as shown in Figure IX-B).

SECTION IX continued
Installation of Options

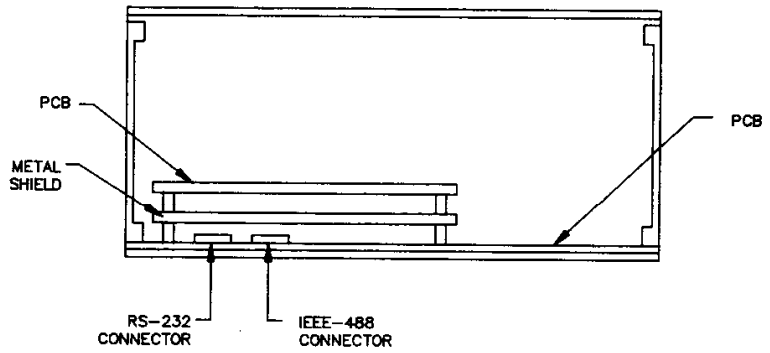

Figure IX-B
View With Rear Panel Removed

7) Re-install the rear panel to the instrument case with the four access screws.

8) Attach the label supplied with option card to the rear panel of the instrument and mark the RS-232 or IEEE-488 installed using permanent marker.

IX-B INSTALLATION OF RACK MOUNTING OPTION

The Rack Mounting Kit (Item # 119510) consists of two mounting brackets with four metric flat head screws and an adapter plate with two 1/4-20 screws.

1) To convert a standard bench instrument into a 19" rack mountable unit, loosen the small slotted screw on bottom of each Side Cover Plate, as shown in Figure IX-C. Remove the Side Cover Plate.

2) Install the Rack Mounting Brackets, using the four metric flat head screws provided.

3) Attach the Adapter Plate to either the left or right side Rack Mounting Bracket.

4) The instrument can now be mounted in a 19" wide rack or cabinet.

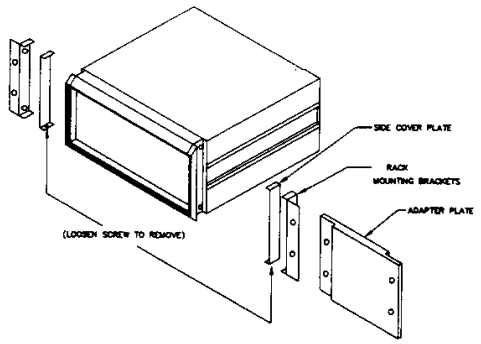

Figure IX-C
Rack Mounting Installation

APPENDIX

PROGRAMMING INFORMATION

F.W. Bell offers an optional diskette containing five programs that demonstrate the use of the RS-232 and IEEE-488 communications ports on the MODEL-9500 Gaussmeter. Contact the factory to obtain this diskette.

These programs were developed to provide the systems programmer with a working template that can be used as a guide when developing application progams. These programs should eliminate guesswork and allow the programmer to concentrate on the application rather than the interface. Used as a debugging tool, they can verify that the hardware interface between the gaussmeter and computer is correct and operational.

Each program is designed to operate on an IBM PC or compatible. Three of the programs are written in BASIC and two in the "C" language:

GMRS232.BAS	--	RS-232 control (BASIC)
GMIE488M.BAS	--	IEEE-488 control (BASIC) for Metrabyte IE-488 card
GMIE488N.BAS	--	IEEE-488 control (BASIC) for National Instruments PCIIA card
GMRS232.C	--	RS-232 control ("C")
GMIE488M.C	--	IEEE-488 control ("C") for Metrabyte IE-488 card

Listed in this appendix is the BASIC program for the RS-232 port and one of the BASIC programs for the IEEE-488 port. The "C" programs are not listed due to space.

GENERAL PROGRAMMING INFORMATION

1) Always ensure that the gaussmeter is in the "RUN" mode before issuing SLAVE commands. Use the COMMUNICATIONS FORMAT menu to manually match the port characteristics to the computer's before starting. The gaussmeter permanently saves this information so you will not have to do this each time you power-up.

2) The MEASURE command does *not* trigger the gaussmeter to take a new measurement when reading fields. The gaussmeter continuously makes new measurements and updates the display independent of the communications ports. The information returned from the MEASURE command represents the latest reading. In the DC mode, the update rate is about once every 1/3 second. If a MEASURE command is issued at a rate faster than the update rate you will retrieve multiple identical readings. The update rate degrades slightly when using such things as AUTORANGE, PEAK HOLD, etc. The rate can be improved by turning off either the DIGITS or BARAGRAPH.

3) No specific command tells the programmer the meter is offline (deactivated from the DISPLAY FORMAT menu or missing a probe). To determine this remotely, send a "dummy" MEASURE command. A MEASURE command

APPENDIX continued
Programming Information

normally looks like <ESC>ME100000000<CR>. Replacing the "0"s with a specific ASCII character string such as <ESC>ME1abcdefgh<CR> the gaussmeter will return the command exactly as you sent it, if offline. The "abcdefg" will be replaced with the actual field information, as described in this manual, if online.

4) In any application program involving communication with external devices it is a good idea to incorporate an escape route in the event a device fails to function properly. When programming the gaussmeter's setup parameters (MODE, RANGE, etc.) allow enough time for the gaussmeter to execute the command and return the response before declaring a timeout and reissuing the command. Each setup operation can take several seconds to execute before the gaussmeter returns the response. The more operations there are in one single command string, the longer it will take to receive a response. For a single MEASURE or LOCKOUT command the gaussmeter can return a response within several milliseconds.

RS-232 PROGRAMMING INFORMATION

1) When using the RS-232 port use one of the two cable configurations depicted in this manual. The use of parity checking is highly recommended. We have found that some PCs power-up with their RS-232 handshake lines in a FALSE state. If you are using a cable with full handshaking this may present a problem unless your software makes these lines TRUE. The use of the cable *without* handshaking is suggested if in doubt. Using a cable with just TX, RX and GND will not work.

2) There is a certain amount of time that is required for the gaussmeter to return a response command. When calculating an appropriate timeout value remember to include the baud rate lag time. The time it takes to transmit each character (not each string) is:

$$\text{TIME (seconds)} = \frac{1 + D + S + P}{\text{BAUD}}$$

where: D = number of data bits
S = number of stop bits
P = 0 for no parity or
1 for odd/even parity

A single MODE command at 1200 BAUD, 7 data bits, odd parity, one stop bit will require a minimum of 50 milliseconds to transmit. *Remember, baud rate only describes the rate at which each character is transmitted and not the time it takes the computer to load each character into the transmit buffer.*

3) When issuing a ZERO or RELATIVE command the gaussmeter will transmit an XOFF (hex 13) when it first enters the operation and an XON (hex 11) when it finishes, and *then* returns the response. The gaussmeter also transmits XOFF and XON any time it performs a recalibration sequence. Your progam should be prepared for these control characters. See the section of this manual dealing with software handshaking.

IEEE-488 PROGRAMMING INFORMATION

1) When using the IEEE-488 bus, *always* read the gaussmeter's response string whether or not your wish to use it. The gaussmeter will remain idle until the response is read. Remember that a TRIGGER command is required after you output a command string to the gaussmeter.

RS-232 DEMO PROGRAM

```
100  CLS
105  PRINT "*****************************************************************************************"
110  PRINT "*                    F. W. BELL SERIES-9900 / MODEL-9500 GAUSSMETER                    *"
115  PRINT "*                              RS-232 DEMO PROGRAM                                     *"
120  PRINT "*****************************************************************************************"
125  PRINT
130  PRINT "This program was written to assist users of the SERIES-9900 or                          "
135  PRINT "  MODEL-9500 Gaussmeters who wish to control the instrument                             "
140  PRINT "  remotely using the RS-232 communications port.  This program                          "
145  PRINT "  will work with either communications cable depicted in the                           "
150  PRINT "  Gaussmeter user's manual, but the cable WITHOUT handshaking is                       "
155  PRINT "  recommended in most applications.  The Gaussmeter must contain                       "
160  PRINT "  V1.7A or higher software. V1.8 or higher is recommended.  The                        "
165  PRINT "  software version is displayed immediately after power-up.                            "
170  PRINT
175  PRINT "The intent of this program is to provide the system programmer                         "
180  PRINT "  with operational code that can be used during the development                         "
185  PRINT "  of his or her own applications software.  This program can also                       "
190  PRINT "  be used to verify the hardware interface between the computer                         "
195  PRINT "  and the Gaussmeter.                                                                   "
200  PRINT
205  PRINT  "Press any key to continue.....                                                         "
210  IF INKEY$ = " " THEN 210 ELSE CLS
215  PRINT "The program is designed to operate from the PC's COM1 port, odd                        "
220  PRINT "  parity, 1 stop bit, 7 data bits, 9600 baud.  See the comments                         "
225  PRINT "  in the program to change these parameters.  At this point make                        "
230  PRINT "  sure that the Gaussmeter's RS-232 parameters match these by                           "
235  PRINT "  using the 'COMMUNICATIONS FORMAT' menu.  Place the Gaussmeter                         "
240  PRINT "  in the RUN mode before starting.                                                      "
245  PRINT
250  PRINT "The program will begin by locking out the front panel and then                         "
255  PRINT "  programming in the Gaussmeter MODE to GAUSS-DC, RANGE to 3 kG,                       "
260  PRINT " PEAK HOLD to OFF and DISPLAY DIGITS, BARGRAPH and BACKLIGHT ON,                        "
265  PRINT "  After this field measurements will be acquired and displayed                          "
270  PRINT "  until the user presses any key.  If using a SERIES-9900 only                          "
275  PRINT "  CHANNEL-1 will be programmed.                                                         "
280  PRINT
285  PRINT "Press any key to start.....                                                             "
290  IF INKEY4 = "" THEN 290 ELSE CLS
295  '
296  DIM RS232.IN$(255)                          'RESPONSE INPUT BUFFER.
297  MATCH% = 1
298  '
300  '====== Open COMM PORT on PC and build demo command strings =====
305  '
315  MODE$ = "MO12"                              'MODE = GAUSS-DC
320  RANGE$ = "RA14"                             'RANGE = 3 KG
325  MEAS$ = "ME100000000"                       'MEASURE (ZERO FILL)
330  PEAK$ = "PE11"                              'PEAK HOLD = OFF
335  DISP$ = "DI1222"                            'DISPLAY FORMAT (EVERYTHING ON)
340  LOKON$ = "LO2"                              'LOCKOUT ON
345  LOKOFF$ = "LO1"                             'LOCKOUT OFF
350  '
351  '=== On most PCs COM-1 is located at I/O address &H03F8 ====
352  '
```

RS-232 Demo Program continued

```
355   COMPORT1 = &H3F8                          'COM1 I/O ADDRESS
360   COMPORT1.LSR = COMPORT1 + 5               '8250 LINE STATUS REG
365   OPEN "COM1:9600,O,7,1,CS,DS,CD" AS #1     '9600 BAUD,ODD PARITY, 7 BITS
370   '
375   '===== Send LOCKOUT-ON command until MASTER mode is terminated. =====
380   '
385   PRINT "Terminating MASTER mode and locking front panel"
390   RS232.OUT$ = LOKON$: GOSUB 9000: GOSUB 8000
395   '
400   '==== Setup Gaussmeter for MODE, RANGE, PEAK HOLD and DISPLAY FORMAT ====
405   '
410   PRINT "Programming the MODE (GAUSS-DC)"
415   RS232.OUT$ = MODE$: GOSUB 9000: GOSUB 8000
420   PRINT "Programming the RANGE (3 KG)"
425   RS232.OUT$ = RANGE$: GOSUB 9000: GOSUB 8000
430   PRINT "Programming PEAK HOLD (OFF)"
435   RS232.OUT$ = PEAK$: GOSUB 9000: GOSUB 8000
440   PRINT "Programming DISPLAY FORMAT"
445   RS232.OUT$ = DISP$: GOSUB 9000: GOSUB 8000
450   '
455   '==== Take field measurements ====
460   '
462   MATCH% = 0
465   PRINT: PRINT"ACQUIRING FIELD MESUREMENTS...PRESS ANY KEY TO QUIT."
470   '
475   RS232.OUT$ = MEAS$
480   GOSUB 9000: GOSUB 8030
485   IF INKEY$ = "" THEN 480
490   '
495   '===== Send LOCKOUT-OFF command to resume MASTER mode. =====
500   '
502   MATCH% = 1
505   PRINT: PRINT "Enabling MASTER mode and unlocking front panel"
510   RS232.OUT$ = LOKOFF$: GOSUB 9000: GOSUB 8000
515   CLOSE #1: END
8000  '
8005  '*****************************************************************************************************************
8010  ' Print on screen the command string sent and the response received.
8015  '*****************************************************************************************************************
8020  PRINT"GAUSSMETER COMMAND WAS [";
8025  PRINT RIGHT$(RS232.OUT$,OUTLEN);:PRINT"]";: PRINT "  ";
8030  PRINT"GAUSSMETER RESPONSE WAS [";
8035  PRINT LEFT$(RS232.IN$,INLEN);:PRINT"]"
8040  RETURN
9000  '
9005  '*** ***********************************************************************************************************
9010  'THIS SUBROUTINE IS USED TO COMMUNICATE TO AND FROM THE GAUSSMETER.                                          *
9015  '                                                                                                            *
9020  'UPON ENTRY THE COMMAND STRING TO BE ISSUED TO THE GAUSSMETER MUST BE                                        *
9025  '*  IN THE "RS232.OUT$" GLOBAL BUFFER.  THE SUBROUTINE WILL TRANSMIT THE                                     *
9030  '*  COMMAND AND WAIT FOR THE GAUSSMETER TO TRANSMIT ITS RESPONSE.  IF ANY                                    *
9035  '*  OF THE FOLLOWING CONDITIONS OCCUR THE PROCESS WILL BE REPEATED:                                          *
9040  '*   1) IF 5 SECONDS HAS ELAPSED WITHOUT A RESPONSE.                                                         *
9045  '*   2) IF THE RESPONSE DID NOT CONTAIN THE  CORRECT NUMBER OF                                               *
9050  '*        CHARACTERS.                                                                                        *
```

RS-232 Demo Program continued

```
9055  '*   3) IF THE GLOBAL VARIABLE "MATCH%" IS SET TO A NON-ZERO VALUE                    *
9060  '*        (MUST BE INITIALIZED BEFORE CALLING THIS ROUTINE) AND THE                   *
9065  '*      THE RESPONSE DID NOT EXACTLY MATCH THE COMMAND STRING.                        *
9070  '* UPON FOUR UNSUCCESSFUL ATTEMPTS THE PROCESS WILL BE ABORTED AND AN                 *
9075  '* ERROR MESSAGE WILL BE PRINTED TO THE SCREEN.                                       *
9080  '*                                                                                   *
9085  '* UPON SUCCESS THE STRING RETURNED BY THE GAUSSMETER WILL BE IN THE                 *
9090  '* "RS232.IN$" GLOBAL BUFFER.  THE GLOBAL VARIABLES "OUTLEN" AND INLEN"              *
9092  '*  WILL INDICATE THE NUMBER OF CHARACTERS TRANSMITTED/RECEIVED, NOT                 *
9100  '*  INCLUDING THE INITIATOR (ESC) OR TERMINATOR (CR) CHARACTERS.  IF ALL             *
9102  '*  WENT WELL THE TWO WILL BE EQUAL.                                                 *
9105  '***********************************************************************************
9110  '
9115  ON ERROR GOTO 9290
9120  RETRY = 4
9125  '
9130  '==== Send initiator <ESC>. then send command. ====
9135  '
9140  OUTLEN = LEN(RS232.OUT$)
9145  START.TIME = TIMER                          'IF SYSTEM TIME IS APPROACHING ROLLOVER
9150  IF START.TIME > 86394! THEN 9145            ' THEN WAIT FOR IT TO ROLLOVER
9155  RS232.IN$ = ""                              'CLEAR INPUT BUFFER
9160  PRINT #1,CHR$(27):: PRINT #1.RS232.OUT$
9165  '
9170  '==== WAIT 5 SECONDS FOR ECHO FROM GAUSSMETER ====
9175  '
9180  IF EOF(1) <> -1 THEN 9235                   'ANY CHARACTER PENDING?
9190  IF (TIMER - START.TIME) < 5 THEN 9180
9195  RETRY = RETRY -1: IF RETRY > 0 THEN 9130
9200  '
9205  BEEP: PRINT "****** GAUSSMETER RS-232 INTERFACE FAILURE ******": PRINT
9206  PRINT  "Using the COMMUNICATIONS FORMAT menu verify that"
9207  PRINT          "the baud rate and other characteristics have been"
9208  PRINT          "correctly programmed.  Check your interface cable."
9210  CLOSE #1: END
9215  '
9220  '===== Load response string into input buffer until terminator =====
9225  '=====  character <CR> is found.                                  =====
9230  '
9235  RS232.IN$ = RS232.IN$ + INPUT$(LOC(1),#1)
9240  IF(INSTR(RS232.IN$,CHR$(13))) = 0 THEN 9180
9245  '
9250  INLEN = LEN(RS232.IN$)-1
9255  IF OUTLEN <> INLEN THEN 9130
9260  IF MATCH% = 0 THEN 9270
9265  IF(INSTR(RS232.IN$,RS232.OUT$)) = 0 THEN 9130
9270  ON ERROR GOTO 0: RETURN
9275  '
9280  '==== If a receiver error clear the receiver status and continue. ====
9285  '
9290  COMM.ERROR% =INP(COMPORT1.LSR): RESUME NEXT
9295  '
```

IEEE-488 DEMO PROGRAM

```
100   CLS
105   PRINT "*****************************************************************************************************"
110   PRINT "*              F.W. BELL SERIES-9900 / MODEL-9500 GAUSSMETER                                        *"
115   PRINT "*                        IEEE-488 DEMO PROGRAM                                                      *"
120   PRINT "*****************************************************************************************************"
130   PRINT
150   PRINT "This program was written to assist users of the SERIES-9900 or                                      "
160   PRINT "  MODEL-9500 Gaussmeters who wish to control the instrument                                         "
170   PRINT "  remotely using the IEEE-488 instrumentation bus.  The intent of                                   "
180   PRINT "  this program is to provide the system programmer with a                                           "
185   PRINT "  template that can be used during the development of his or her                                   "
190   PRINT "  own code.  The Gaussmeter must contain V1.7A or higher soft-                                     "
195   PRINT "  ware.  The software version is displayed immediately after                                       "
200   PRINT "  power-up.                                                                                         "
230   PRINT                                                                                                      "
233   PRINT "Press any key to continue.....                                                                      "
235   IF INKEY$ = "" THEN 235 ELSE CLS
240   PRINT "The program is designed to operate with a METRABYTE IE-488 con-                                    "
250   PRINT "  troller card set to memory address C0000 hex, an I/O base                                         "
260   PRINT "  address of 300 hex, DMA channel-3 and INTERRUPT-5.  The GAUSS-                                   "
265   PRINT "  METER should be set to a device address of 15 decimal using the                                  "
270   PRINT "  'COMMUNICATIONS FORMAT' menu.  To change these parameters see                                    "
275   PRINT "  lines 1080-1090 in the program and the METRABYTE user's manual.                                  "
285   PRINT
290   PRINT "The program will begin by locking out the front panel and then                                     "
295   PRINT "  programming the Gaussmeter MODE to GAUSS-DC, RANGE to 30 G,                                      "
300   PRINT "  PEAK HOLD to OFF and DISPLAY DIGITS, BARGRAPH and BACKLIGHT ON.                                  "
305   PRINT "  After this field measurements will be acquired and displayed                                     "
310   PRINT "  until the user presses any key.  If using a SERIES-9900 only                                     "
315   PRINT "  CHANNEL-1 will be programmed.                                                                    "
320   PRINT
350   PRINT "Press any key to start.....                                                                         "
355   IF INKEY$ = "" THEN 355 ELSE CLS
360   '
400   '====== Open COMM PORT on PC and build demo command strings =====
1000  '
1010  MODE$ = "MO12"                                  'MODE = GAUSS-DC
1020  RANGE$ = "RA12"                                 'RANGE = 30G
1030  MEAS$ = "ME100000000"                           'MEASURE (ZERO FILL)
1040  PEAK$ = "PE11"                                  'PEAK HOLD = OFF
1050  DISP$ = "DI1222"                                'DISPLAY FORMAT (EVERYTHING ON)
1060  LOKON$ = "LO2"                                  'LOCKOUT ON
1070  LOKOFF$ = "LO1"                                 'LOCKOUT OFF
1080  DEF SEG = &HC000: IE488 = 0: FLG% = 0: BA0% = 0: D% = 0: GM$ = "15"
1090  CMD$ = "SYSCON MAD=3,CIC=1,NOB=1,BA0=&H300": GOSUB 9070
1095  '
2000  '===== CLEAR GAUSSMETER AND LOCKOUT FRONT PANEL =====
2010  '
2015  CLS
2020  CMD$ = "CLEAR " + GM$: GOSUB 9070
2025  PRINT "PLACING GAUSSMETER IN REMOTE MODE."
2030  CMD$ = "REMOTE " + GM$: GOSUB 9070
2040  '
2050  '==== Setup Gaussmeter for MODE, RANGE, PEAK HOLD and DISPLAY FORMAT ====
```

IEEE-488 Demo Program continued

```
2060  '
2070  PRINT "Programming the MODE (GAUSS-DC)"
2080  COMMAND$ = MODE$: GOSUB 9500
2090  IF OUTLEN = INLEN THEN GOSUB 8000 ELSE GOTO 2070
2100  PRINT "Programming the RANGE (30G)"
2110  COMMAND$ = RANGE$: GOSUB 9500
2120  IF OUTLEN = INLEN THEN GOSUB 8000 ELSE GOTO 2100
2130  PRINT "Programming PEAK HOLD (OFF)"
2140  COMMAND$ = PEAK$: GOSUB 9500
2150  IF OUTLEN = INLEN THEN GOSUB 8000 ELSE GOTO 2130
2160  PRINT "Programming DISPLAY FORMAT"
2170  COMMAND$ = DISP$: GOSUB 9500
2180  IF OUTLEN = INLEN THEN GOSUB 8000 ELSE GOTO 2160
2190  '
2200  '==== Take field measurments ====
2210  '
2220  CLS
2230  PRINT " ": PRINT "TAKING FIELD MEASUREMENTS...PRESS ANY KEY TO QUIT."
2240  '
2250  IF INKEY$ <> "" THEN 2290
2260  COMMAND$ = MEAS$: GOSUB 9500
2270  IF OUTLEN = INLEN THEN GOSUB 8000 ELSE GOTO 2250
2280  GOTO 2250
2290  PRINT "PLACING GAUSSMETER IN LOCAL MODE."
2300  CMD$ = "LOCAL " + GM$: GOSUB 9070
2310  GOTO 9999
8000  '
8010  '*****************************************************************************************************************
8020  ' Print on screen the command string sent and the response received.
8030  '*****************************************************************************************************************
8040  PRINT"GAUSSMETER COMMAND WAS [";
8050  PRINT RIGHT$(COMMAND$,OUTLEN);:PRINT"]";: PRINT "  ";
8060  PRINT"GAUSSMETER RESPONSE WAS [";
8070  PRINT LEFT$(IEEE-488$,INLEN-1);:PRINT"]"
8080  RETURN
9000  '
9010  '***** METRABYTE IEEE-488 CARD I/O SUBROUTINE *****
9020  '
9030  CALL IE488(CMD$,IEEE488$,FLG%,BA0%)
9035  IF FLG% = &H200 THEN 9030
9040  IF FLG% = 0 THEN 9060
9050  BEEP: PRINT "IEEE-488 ERROR = &H";HEX$(FLG%)
9060  RETURN
9070  CALL IE488(CMD$,D%,FLG%,BAO%): GOTO 9040
9500  '
9510  '***** COMMAND / RESPONSE SUBROUTINE *****
9515  '
9520  '===== WAIT FOR GAUSSMETER IEEE-488 BUS TO BE IDLE =====
9503  '
9540  CMD$ = "STATUS " + GM$: GOSUB 9070: IF D% <> 0 THEN 9540
9550  '
9560  '===== CONSTRUCT COMMAND STRING AND SEND TO GAUSSMETER =====
9570  '
9580  IEEE488$ = CHR$(27) + COMMAND$ + CHR$(13)
9590  CMD$ = "OUTPUT " + GM$ + "[$]#": GOSUB 9000
```

IEEE-488 Demo Program continued

```
9600   CMD$ = "TRIGGER " + GM$: GOSUB 9070
9610   '
9660   '==== WAIT FOR GAUSSMETER TO FINISH COMMAND EXECUTION ====
9670   '
9680   CMD$ = "STATUS " + GM$: GOSUB 9070: IF D% <> &H40 THEN 9680
9690   '
9700   '==== INPUT COMMAND STRING ECHO AND DISPLAY IT =====
9710   '
9720   CMD$ = "ENTER " + GM$ + "[$]%": GOSUB 9000
9730   '
9740   '==== CALCULATE ASCII BUFFER LENGTHS ====
9750   '
9760   OUTLEN = LEN(COMMAND$) + 1:  INLEN = LEN(IEEE488$) - 1
9780   RETURN
9999   END
```

WARRANTY

F.W. BELL, INC. warrants each instrument of its manufacture to be free from defects in material and workmanship. Our obligation under this warranty is limited to servicing or adjusting any instrument returned to our factory for that purpose, and to replacing any defective parts thereof. This warranty covers instruments which, within one year after delivery to the original purchaser, shall be returned with transportation charges prepaid by the original purchaser, and which upon examination shall disclose to our satisfaction to be defective. If it is determined that the defect has been caused by misuse or abnormal conditions of operation, repairs will be billed at cost after submitting an estimate to the purchaser.

F.W. BELL, INC. reserves the right to make changes in design at any time without incurring any obligation to install same on units previously purchased.

This warranty is expressly in lieu of all other obligations or liabilities on the part of F.W. BELL, INC., and F.W. BELL, INC. neither assumes nor authorizes any other person to assume for them any other liability in connection with the sales of F.W. BELL, INC. instruments.

DAMAGE IN SHIPMENT

The instrument should be examined and tested as soon as it is received. If it does not operate properly, or is damaged in any way, immediately file a claim with the carrier. The claim agent will provide report forms. A copy of the completed form should be forwarded to us. We will then make the necessary arrangements for repair or replacement. All correspondence concerning this instrument should include model and serial numbers.

SHIPPING INSTRUCTIONS

Contact the factory for Return Material Authorization number (RMA #) prior to shipping. All returns must be shipped to the factory with an RMA #.

Use the original shipping carton and inserts, if possible, or pack the instrument in a sturdy container and surround the entire instrument with two to three inches of shock-absorbing material.

Ship to:
F.W. BELL, INC. • Repair Department
6120 Hanging Moss Road • Orlando, FL 32807
Phone: 407-678-6900