Established 1981
Advanced Test Equipment Rentals
www.atecorp.com 800-404-ATEC (2832)

INSTRUCTION MANUAL

MODEL 132

VCG/NOISE GENERATOR

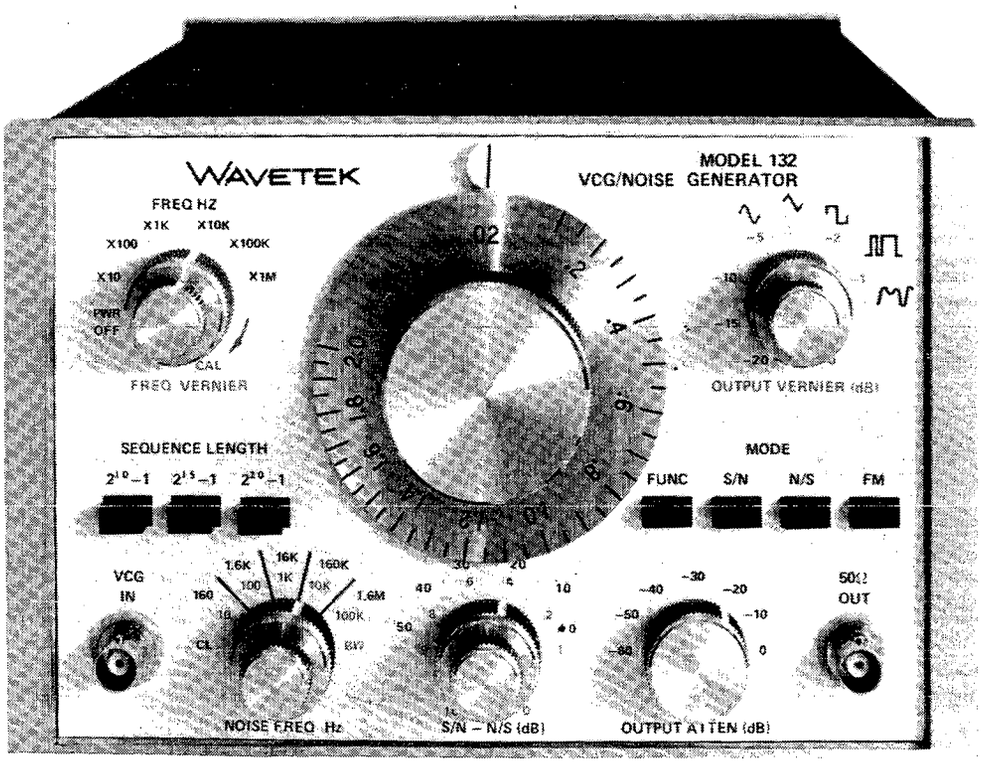

WAVETEK

WARRANTY

All Wavetek instruments are warranteed against defects in material and workmanship for a period of one year after date of manufacture. Wavetek agrees to repair or replace any assembly or component (except batteries) found to be defective, under normal use, during this period. Wavetek's obligation under this warranty is limited solely to repairing any such instrument which in Wavetek's sole opinion proves to be defective within the scope of the warranty when returned to the factory or to an authorized service center. Transportation to the factory or service center is to be prepaid by purchaser. Shipment should not be made without prior authorization by Wavetek.

This warranty does not apply to any products repaired or altered by persons not authorized by Wavetek, or not in accordance with instructions furnished by Wavetek. If the instrument is defective as a result of misuse, improper repair, or abnormal conditions or operations, repairs will be billed at cost.

Wavetek assumes no responsibility for its product being used in a hazardous or dangerous manner either alone or in conjunction with other equipment. High voltage used in some instruments may be dangerous if misused. Special disclaimers apply to these instruments. Wavetek assumes no liability for secondary charges or consequential damages and, in any event, Wavetek's liability for breach of warranty under any contract or otherwise, shall not exceed the purchase price of the specific instrument shipped and against which a claim is made.

Any recommendations made by Wavetek for use of its products are based upon tests believed to be reliable, but Wavetek makes no warranty of the results to be obtained. This warranty is in lieu of all other warranties, expressed or implied, and no representative or person is authorized to represent or assume for Wavetek any liability in connection with the sale of our products other than set forth herein.

CONTENTS

Section One	**SPECIFICATIONS**	
	Physical and Electrical Specifications	1
Section Two	**OPERATION**	
	Inspection	3
	Operating Controls	4
	Operation	7
Section Three	**CIRCUIT DESCRIPTION**	
	General Description	11
Section Four	**MAINTENANCE**	
	Introduction	13
	Recommended Test Equipment	13
	Checkout and Calibration	13
	Troubleshooting	16
Section Five	**DATA PACKAGE**	
	Introduction	21
	Recommended Spare Parts List	21

SCOPE OF MANUAL

This manual contains instructions for operating, testing, and maintaining the Wavetek Model 132 VCG/Noise Generator. The Wavetek product-improvement program ensures that the latest electronic developments are incorporated into the Wavetek instruments by the addition of circuit and component changes as rapidly as development and testing permit. Due to the time required to document and print this manual, it is not always possible to incorporate these changes into the manual. In this case, data will be found on engineering change sheets at the back of the manual. If there are no change sheets, the manual is correct as printed.

SCOPE OF EQUIPMENT

The Model 132 is a source of analog and digital noise, as well as a precision source of sine, triangle and square waveforms. Noise outputs, or waveforms can be used individually, or combined to provide selectable, calibrated signal-to-noise and noise-to-signal ratios to +60 dB. Waveforms can be varied over a frequency range of 0.2 Hz to 2 MHz. Length of the digital sequence is selectable to a maximum of $2^{20} - 1$ bits. Clock rates, variable from 160 Hz through 1.6 MHz, give added versatility to the noise generator. These clock rates allow selectable noise bandwidths variable from 10 Hz to 100 kHz.

SECTION 1
SPECIFICATIONS

VERSATILITY

Waveforms
Sine ∿, square ⊓⊔, triangle ∧∨ waveforms and analog noise ⌒⌒, or digital noise ⎍⎍

Frequency Range of Signal
0.2 Hz to 2 MHz in 6 decade ranges

Ranges

X10	0.2 Hz to 20 Hz
X100	2 Hz to 200 Hz
X1K	20 Hz to 2 kHz
X10K	200 Hz to 20 kHz
X100K	2 kHz to 200 kHz
X1M	20 kHz to 2 MHz

Function Outputs
Sine ∿, square ⊓⊔, and triangle ∧∨ selectable, with 60 dB step attenuator in 10 dB steps and overlapping calibrated vernier; 50Ω output impedance, 20 V p-p into open circuit and 10 V p-p into 50Ω load from 50Ω source impedance.

Sync Output
Greater than 1 V p-p square wave into open circuit at 600Ω output impedance.

DC Offset
±5 V offset (±2.5 V offset into 50Ω load) controlled from rear panel; peak amplitude limited by the dynamic range of the amplifier output.

VCG – Voltage Controlled Generator
Frequency of the generator may be dc-programmed, or ac-modulated by external 0 to ±5 V signal. Voltage control circuitry is capable of 1000:1 deviation. The VCG amplifier has a 100 kHz bandwidth and a slew rate of 0.1 V/μs. The instantaneous frequency is the result of the sum of the dial setting and the externally applied voltage.

Stability

Short term	±0.05% for 10 minutes
Long term	±0.25% for 24 hours

Percentages apply to amplitude, frequency, and dc offset.

HORIZONTAL PRECISION

Dial Accuracy
±2% of full scale, 1 Hz to 2 MHz

Frequency Vernier
One turn equals 1% of full scale.

Time Symmetry
±1% through X100K range

VERTICAL PRECISION

Sine Wave Frequency Response
Amplitude change with frequency less than:
0.1 dB from 0.2 Hz to 200 kHz
0.5 dB from 0.2 Hz to 2 MHz

PURITY

Sine Wave Distortion
Less than:
0.5% on X10, X100, X1K, X10K ranges
1.0% on X100K range
All harmonics 30 dB down on X1 MHz range

Square Wave Rise and Fall Time
Less than 50 ns terminated into 50Ω

NOISE

Outputs
Pseudo-random analog or digital noise with a maximum of 20 V p-p excursion (open circuit) with 60 dB step attenuator in 10 dB steps and overlapping calibrated vernier.

Sequence Lengths
Push buttons on the front panel provide a sequence length of $2^{10} - 1$, $2^{15} - 1$, or $2^{20} - 1$.

Noise Clock Frequency

Switch selectable noise frequencies are listed below.

Clock Frequency	Analog Noise Bandwidth
160 Hz	10 Hz
1.6 kHz	100 Hz
16 kHz	1 kHz
160 kHz	10 kHz
1.6 MHz	100 kHz

OPERATIONAL MODES

FUNC Function Mode — Provides the selected waveform at the main output.

S/N Signal-to-Noise operation adds noise to a selected signal of constant amplitude. The signal-to-noise ratio is variable from 0 to +60 dB.

N/S Noise-to-Signal operation adds a selected signal to a constant amplitude noise. The noise-to-signal ratio is variable from 0 to +60 dB.

FM Frequency Modulation — Provides random modulation of the frequency of the generator. The S/N - N/S (dB) ratio control also controls the amount of frequency deviation.

NOTE

When noise is added to the signal output, specifications apply up to 200 kHz and the square wave rise time is derated by a factor of 10. In the clock range of 1.6 MHz, the maximum calibrated signal-to-noise ratio is 30 dB.

ENVIRONMENTAL

Temperature

All specifications listed, except stability, are for 25°C ±5°C. For operation from 0°C to 55°C, derate all specifications by factor of 2.

MECHANICAL

Dimensions

8½ inches wide, 5¼ inches high, 11½ inches deep

Weight

8 lbs net, 12 lbs shipping

Power

105 V to 125 V or 200 V to 250 V, 50 Hz to 400 Hz. Less than 15 watts.

NOTE

All specifications apply for frequencies obtained when dial is between 0.1 and 2.0 and at 10 V p-p into a 50 ohm load.

It is possible to stop the generator from oscillating by applying a negative VCG voltage when the dial is already set at minimum frequency. VCG inputs up to 30 V will not permanently damage the instrument.

SECTION 2
OPERATION

INSPECTION

The following procedures should be performed to assure the user that the instrument has arrived at its destination in satisfactory operating condition. Complete calibration and checkout instructions are provided in Section 4 to determine compliance with electrical specifications.

Checking Visually

After carefully unpacking the instrument, visually inspect the external parts for damage to knobs, dials, indicators, surface areas, etc. If damage is discovered, file a claim with the carrier who transported the instrument. Retain the shipping container and packing material for use in case reshipment is required.

Checking Electrically

NOTE

Instruments are normally shipped connected for 115 V power unless 230 V power is ordered. Refer to the end of this section for conversion instructions.

The steps in this paragraph provide a quick checkout of the instrument operation. If electrical deficiencies exist, refer to the WARRANTY in the front of this manual. The following test equipment is recommended for performing this electrical inspection:

Name	Required Characteristics
Oscilloscope	To 30 MHz
Plug-In	Dual channel
Plug-In	Peak mV measuring capability
Counter-Timer	To 2 MHz with 5-digit resolution

1. Turn FREQ HZ selector to the X1K position. (This connects ac power to the unit and establishes the frequency multiplier.)
2. Depress MODE — FUNC push button.
3. Connect oscilloscope to the 50Ω OUT connector with a 50Ω terminator.
4. Set frequency dial to the 1.0 mark and FREQ VERNIER to CAL position.
5. Set function selector to the ∿ position.
6. Set OUTPUT ATTEN (dB) and OUTPUT VERNIER (dB) to maximum clockwise (cw) position (no attenuation).
7. Check for 1 kHz sine wave with at least 10 V p-p amplitude on oscilloscope.
8. Select ⩘ and ⎍ with function selector and check for 10 V p-p amplitude on oscilloscope.
9. Turn frequency dial from maximum counterclockwise (ccw) to maximum cw position and check for frequency change.
10. Step OUTPUT ATTEN (dB) selector through its range and verify attenuation at each step.
11. Rotate OUTPUT VERNIER (dB) control from maximum cw to maximum ccw position and check for decreasing amplitude.
12. Rotate FREQ VERNIER control and check for frequency change.
13. Set FREQ VERNIER control at maximum cw and frequency dial at 0.02. Set frequency to 20 Hz with counter. Connect a 0 to +5 Vdc input to the VCG IN connector. Slowly increase voltage input from 0 to +5 V and check that frequency of output waveform increases from approximately 20 Hz to 2 kHz.
14. Depress SEQUENCE LENGTH $2^{10} - 1$ push button.
15. Set NOISE FREQ HZ selector to the 16K/160K position and vernier control fully cw.
16. Connect a BNC cable from the NOISE SYNC connector (rear panel) to the external trigger input of the oscilloscope.
17. Rotate the function selector to ⎍⎍⎍ and check to assure oscilloscope displays digital noise.
18. Check to assure SEQUENCE LENGTH push buttons vary the bits in the sequence length.
19. Step NOISE FREQ HZ selector through its range and check to assure clock frequency changes. (Use NOISE CLOCK connector on rear panel.)

20. Verify that NOISE FREQ HZ vernier control provides approximately 10:1 variation in clock frequency at the NOISE CLOCK connector (rear panel).
21. Rotate function selector to position and check to assure oscilloscope displays analog noise.
22. Check to assure SEQUENCE LENGTH push buttons vary the length of the sequence of analog noise. (Use NOISE SYNC connector on rear panel.)
23. Connect oscilloscope external trigger cable to FUNCTION SYNC connector (rear panel) and set function selector to position.
24. Set S/N — N/S (dB) selector to −10 position and vernier control fully ccw.
25. Depress MODE — FM push button and check to assure square waveforms are frequency modulated by analog noise.
26. Release MODE — FM push button and depress MODE — S/N push button. Check to assure square wave and analog noise are mixed.
27. Depress MODE — N/S push button and rotate S/N — N/S (dB) selector ccw through each position, checking for reduction in signal level.
28. Verify that the S/N — N/S (dB) vernier attenuates the signal approximately 10 dB between each step of the S/N — N/S (dB) selector.

OPERATING CONTROLS

The operating controls and electrical connections for the Model 132 are shown in Figures 2-1 and 2-2. Each of the following paragraph numbers corresponds to a number appearing in Figure 2-1, front panel, or Figure 2-2, rear panel. The listing below discusses each control and its function.

FRONT PANEL

1. **FREQ HZ/PWR OFF** — Selects one of six decade ranges from X10 to X1M for generator frequency. This value multiplied by the frequency dial setting (3) gives the output frequency of the generator. Extreme ccw rotation will place the switch in the PWR OFF position, turning off all power to the function and noise generators. This control has no affect on the noise frequency.

2. **FREQ VERNIER** — Allows precision electronic control of the signal output frequency. A full turn of the control is approximately equal to 1% of full scale. When turned to the full cw position (CAL), settings on the main dial will be calibrated.

3. **Frequency Dial** — Allows coarse control of the signal output frequency.

4. **Frequency Index** — Indicates the frequency dial setting (3) by reading the dial position opposite the scribe line on the frequency index. The index is illuminated when power to the unit is on.

5. **Function Selector** — Selects the desired function or noise output. To select , , or waveforms, or or noise, the FUNC push button (7) must be depressed.

6. **OUTPUT VERNIER (dB)** — Provides vernier control of 0 through −20 dB from the OUTPUT ATTEN (dB) setting (12). This is the fine adjustment for the output signal and will attenuate signal and noise.

MODE

7. **FUNC** — When depressed, this control allows the selected waveform or noise, as determined by the position of the function selector (5), to be present at the 50Ω OUT connector (11). This push button must also be in the depressed position for the frequency modulation mode (10).

8. **S/N** — Depressing this push button allows a calibrated amount of analog noise to be added to the selected signal, either , , or wave. The signal-to-noise ratio (S/N) is determined by the S/N — N/S (dB) attenuator control (13). When in this mode, the peak to peak signal amplitude is reduced internally, since adding noise to the signal would overdrive the output amplifier.

9. **N/S** — Depressing this push button allows a calibrated amount of the selected signal, either , , or wave, to be added to the analog noise. The noise-to-signal ratio (N/S) is determined by the S/N — N/S (dB) attenuator control (13). When in this mode, the peak to peak signal amplitude is reduced internally, since adding the signal to the noise would overdrive the output amplifier.

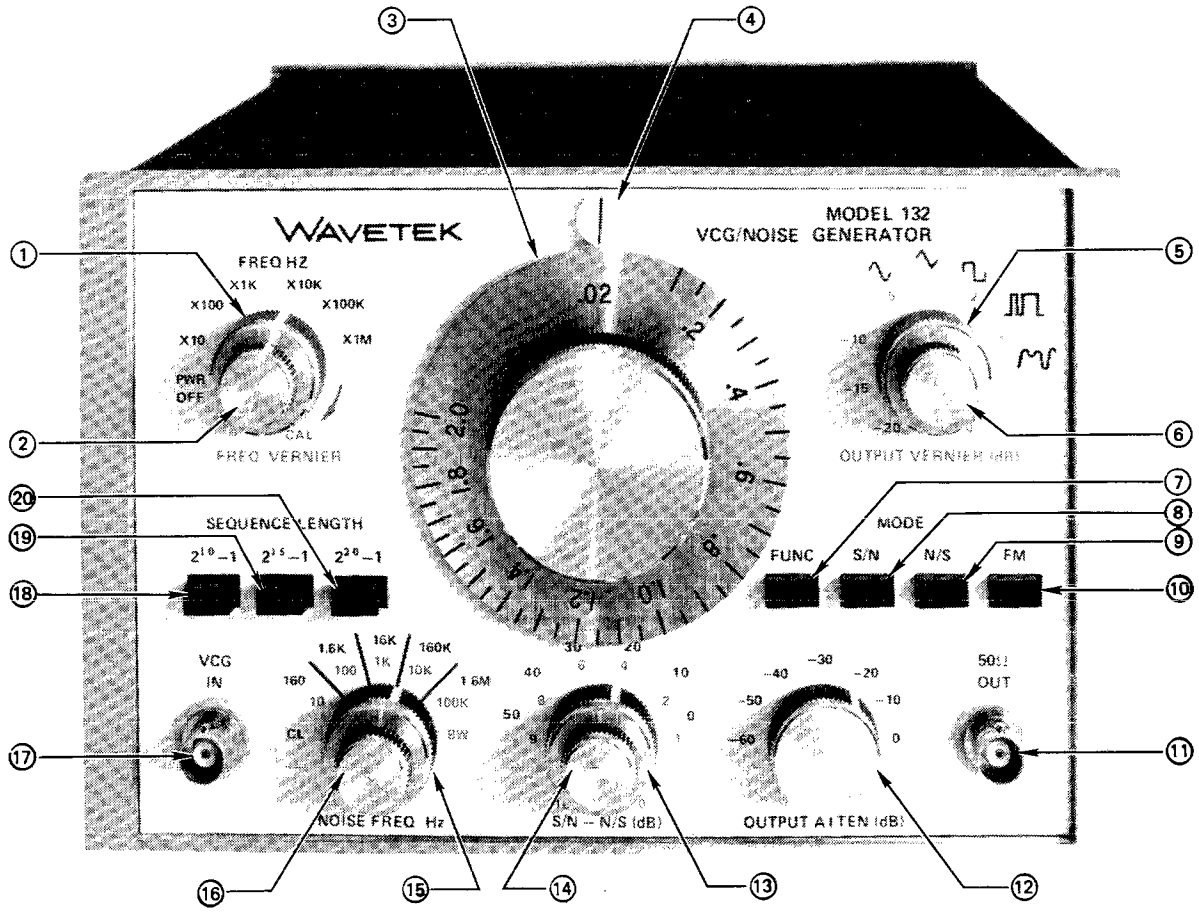

Figure 2-1. Operating Controls, Front Panel

10. **FM** – Depressing this push button along with the FUNC push button (7) allows the selected signal, either ∿ , ⩛ , or ⊓ wave, to be pseudo-randomly frequency modulated, or jittered. The modulating signal is provided by pseudo-random analog noise, and the S/N – N/S (dB) controls frequency deviation. The bandwidth of the modulating signal is controlled by the NOISE FREQ HZ selector (15) and vernier (16).

11. **50Ω OUT** – Provides the selected generator output function. The generator may operate into an open circuit providing 20 V peak to peak maximum, or into a 50Ω load providing a 10 V peak to peak output.

12. **OUTPUT ATTEN (dB)** – Attenuates the output (both signal and noise) from 0 dB to –60 dB in six calibrated 10 dB steps according to the following table:

Step Attenuator Position	Output peak to peak into 50Ω Load	
	Maximum Vernier fully cw	Minimum Vernier*
0 dB	10 V	1 V
–10 dB	3 V	0.3 V
–20 dB	1 V	0.1 V
–30 dB	0.3 V	0.03 V
–40 dB	0.1 V	0.01 V
–50 dB	0.03 V	0.003 V
–60 dB	0.01 V	0.001 V

* The values in this table are approximate. The OUTPUT VERNIER (dB) (6) will reduce the output approximately 20 dB in all cases, as shown.

13. **S/N – N/S (dB)** – In the S/N mode, this control attenuates the analog noise from 0 to –50 dB in five calibrated 10 dB steps. The selectable signal

amplitude remains constant, thus giving calibrated 0 to −50 dB signal-to-noise ratios. In the N/S mode, the signal is attenuated with the noise remaining unchanged, thus giving noise-to-signal ratios from 0 to −50 dB. The steps for this control are indicated in black numerals on the front panel.

14. **S/N — N/S (dB) Vernier** — Allows a calibrated fine adjustment of the S/N — N/S (dB) step attenuator (13). This control is continuously variable over at least a 10 dB range. When added to the coarse control (13), this amount equals the total S/N or N/S ratio. Approximate values of attenuation are indicated in red numerals on the front panel.

15. **NOISE FREQ HZ** — This range control selects the clock frequency, or bandwidth for the digital, or analog noise, respectively. When using the digital noise function, clock frequencies from 160 Hz through 1.6 MHz (indicated in black numerals and letters on the front panel) are available. When using analog noise or the S/N, N/S modes, the bandwidth of the analog noise may be selected from 10 Hz to 100 kHz (indicated in red numerals and letters on the front panel). In the FM mode, this control establishes the bandwidth of the analog noise used for frequency modulation. There are four detent positions with an overlapping vernier control (16). With the vernier in the full cw position, the clock frequency, or bandwidth, is equal to the value printed to the right of the detent mark.

16. **NOISE FREQ HZ Vernier** — As mentioned in number 15, this control provides a continuous, fine control between the detent positions of the coarse control. When in the full cw position, the clock frequency, or bandwidth, is equal to the value appearing at the right of the detent mark. As the knob is rotated ccw, the clock frequency, or bandwidth, is decreased. In the full ccw position, the actual value will be at least 10:1 (and as much as 100:1) lower than the value to the right of the detent mark.

17. **VCG IN** — This connector allows external voltage control of function generator frequency. Up to 1000:1 frequency change may be obtained. A positive voltage increases frequency and a negative voltage decreases frequency. Refer to "Operation as a Voltage Controlled Generator."

SEQUENCE LENGTH

18. $2^{10} - 1$ — Depressing this push button will provide 1,023 counts of the selected clock frequency, or bandwidth, determined by the NOISE FREQ HZ controls (15 and 16), for generation of a digital, or analog noise pattern. At the end of each sequence, the pattern is automatically repeated.

19. $2^{15} - 1$ — Depressing this push button will provide 32,767 counts of the selected clock frequency, or bandwidth, determined by the NOISE FREQ HZ controls (15 and 16), for generation of a digital, or analog noise pattern. At the end of each sequence, the pattern is automatically repeated.

20. $2^{20} - 1$ — Depressing this push button will provide 1,048,575 counts of the selected clock frequency, or bandwidth, determined by the NOISE FREQ HZ controls (15 and 16), for generation of a digital, or analog noise pattern. At the end of each sequence, the pattern is automatically repeated.

REAR PANEL

21. **DC OFFSET** — This control adjusts the ±5 V base line above or below ground (±2.5 V offset into 50Ω load). The OFF position gives normal vertical symmetry. Peak amplitude is limited by the dynamic range of the amplifier output.

22. **FUNCTION SYNC** — This connector provides a synchronizing signal output at the same frequency of the main generator; that is, at the same frequency as the sine, triangle or square wave. The amplitude is greater than 1 V peak to peak square wave into open circuit at 600Ω output impedance.

23. **NOISE SYNC** — This connector provides a synchronizing output signal for monitoring the digital or analog noise. A sync signal is generated at the beginning of each repetitive cycle for the selected sequence length of digital or analog noise.

24. **NOISE CLOCK** — This connector provides an external output of the basic clock frequency used to generate the digital sequence and analog noise.

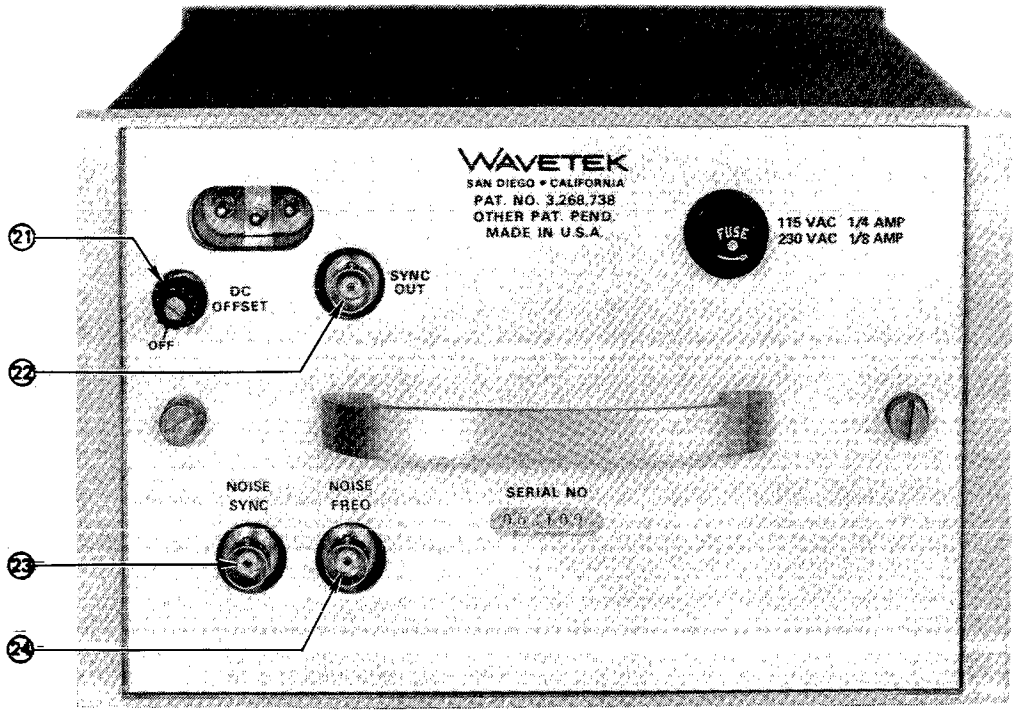

Figure 2-2. Operating Controls, Rear Panel

OPERATION

No preparation for operation is required beyond completion of the initial installation previously stated in this section. It is recommended that a one-half hour warm-up period be allowed for the associated equipment to reach a stabilized operating temperature and for the Model 132 to attain stated accuracies.

Operation as a Function Generator

1. Terminate 50Ω OUT connector with 50Ω ±1%, 2 watt termination.
2. Select the desired waveform by setting function selector to ∿ , ∧ , or ⊓ .
3. Set frequency dial and FREQ HZ range multiplier for desired output frequency.
4. Depress MODE – FUNC push button.
5. Select output signal amplitude by setting OUTPUT ATTEN (dB) control to appropriate attenuation position and fine adjusting signal to desired amplitude with OUTPUT VERNIER (dB) control.
6. A positive or negative dc offset may be applied to the waveform by setting the DC OFFSET (Rear Panel) to the desired level. The peak signal value plus the offset cannot exceed ±5.0 V into 50 ohms.

Operation as a Voltage Controlled Generator

The VCG input connector can be used to externally control the frequency of the generator. If a positive voltage is applied to the VCG input terminal, the frequency will increase from the dial setting. A negative voltage will cause the frequency to decrease from the dial setting. The VCG range of the Model 132 is 1000:1.

1. Terminate 50Ω OUT connector with 50 ohm ±1%, 2 watt termination.
2. Select the desired waveform by setting function selector to ∿ , ∧ , or ⊓ .
3. Set FREQ HZ selector to desired multiplier.
4. Connect external voltage source (dc programming or wideband ac signal) to VCG IN connector.

NOTE

VCG input requires 0 to ±5 volts for operation over full-scale range, but can withstand many times maximum input.

5. Set frequency dial as follows:
   a. For frequency modulation with ac input, set dial for center frequency.

b. For increasing frequency sweep with positive dc input, set dial to lower frequency limit.
c. For decreasing frequency sweep with negative dc input, set dial to upper frequency limit.

6. To sweep the audio range from 20 Hz to 20 kHz, set the controls to 20 Hz as follows:
   a. Set the main dial to 0.02.
   b. Set the frequency vernier to the full ccw position.
   c. Introduce a 0 to +5 V ramp into the VCG input connector.

The maximum frequency which may be obtained, when using the VCG input, is the range multiplier times the value at the top of the dial (2.0). The minimum frequency is the range multiplier times the value at the bottom of the dial (0.002 — frequency vernier must be in ccw position). Verify this using the nomograph in Figure 2-3.

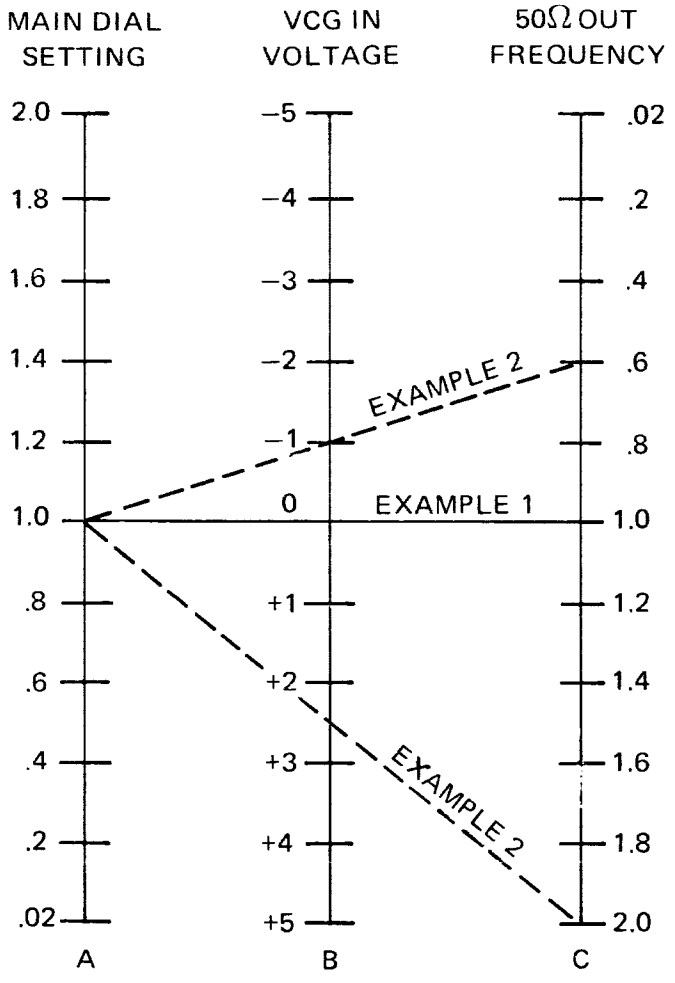

Figure 2-3 - VCG Voltage-to-Frequency Nomograph

In example 1, the dial is set at 1.0 and 0 voltage is applied to the VCG input. Extend a straight line from 1.0 (dial setting) through 0 voltage (VCG voltage) and obtain a dial frequency of 1.0. For the total output frequency, multiply the range by 1 with the same dial setting. Example 2 shows the results of using a ramp from −1 volt to +2.5 volts for the VCG voltage. This results in a swept output from 0.6 to 2.0 on the dial. Remember to multiply the dial times the range.

Operation as a Calibrated Signal-to-Noise Source

1. Select the desired signal waveform by setting function selector to ∿ , ⩘ , or ⎍ .
2. Set frequency dial and FREQ HZ range multiplier for desired signal output frequency.
3. Depress MODE — S/N push button.
4. Select noise bandwidth by setting NOISE FREQ HZ control to desired range and fine adjusting bandwidth by turning the noise frequency Hz vernier control.
5. Select desired SEQUENCE LENGTH by depressing appropriate push button.
6. Select signal-to-noise ratio by setting S/N — N/S (dB) control to appropriate attenuation position and fine adjusting attenuation to desired value with S/N — N/S vernier control.
7. Select total output amplitude by setting OUTPUT ATTEN (dB) control to appropriate attenuation position and fine adjusting signal to desired amplitude with OUTPUT VERNIER (dB) control.

Operation as a Calibrated Noise-to-Signal Source

1. Select the desired signal waveform by setting function selector to ∿ , ⩘ , or ⎍ .
2. Set frequency dial and FREQ HZ range multiplier for desired signal output frequency.
3. Depress MODE — N/S push button.
4. Select noise bandwidth by setting NOISE FREQ HZ control to desired range and fine adjusting bandwidth by turning the noise frequency Hz vernier control.
5. Select desired SEQUENCE LENGTH by depressing appropriate push button.
6. Select noise-to-signal ratio by setting S/N — N/S (dB) control to appropriate attenuation position and fine adjusting attenuation to desired value with S/N — N/S vernier control.
7. Select total output amplitude by setting OUTPUT ATTEN (dB) control to appropriate attenuation position and fine adjusting signal to de-

sired amplitude with OUTPUT VERNIER (dB) control.

Operation as a Random FM Source

Before using the generator as a random FM source, please note the following.

The frequency of the generator is being varied or modulated by a changing voltage in the same way as described in "Operation as a Voltage Controlled Generator." However, instead of using a dc ramp, or ac signal, a random analog voltage is used. When the FM push button is depressed, the analog noise is injected internally into the VCG circuit; therefore, the modulation is created by random noise. The S/N — N/S (dB) knob controls the maximum amount of frequency deviation, since it controls the amplitude of the noise. Bandwidth of the FM signal is controlled by the NOISE FREQ HZ control. Using the generator in the FM mode may be accomplished as follows:

1. Select the desired signal waveform by setting function selector to ∿ , ⩘ , or ⊓ .
2. Set frequency dial and FREQ HZ range multiplier for desired center output frequency.
3. Depress MODE — FUNC and FM push buttons.
4. Select the bandwidth by setting NOISE FREQ HZ control to desired range and fine adjusting frequency by turning the noise frequency Hz vernier control.
5. Select desired SEQUENCE LENGTH by depressing appropriate push button.
6. Select signal frequency deviation by setting S/N — N/S (dB) control to appropriate attenuation position and fine adjusting attenuation to desired deviation with S/N — N/S vernier control.
7. Select output signal amplitude by setting OUTPUT ATTEN (dB) control to appropriate attenuation position and fine adjusting signal to desired amplitude with OUTPUT VERNIER (dB) control.

Operation as a Digital or Analog Noise Source

1. Set function selector to digital or analog noise position.
2. Depress MODE — FUNC push button.
3. Select clock frequency for digital or bandwidth for analog noise by setting NOISE FREQ HZ control to desired range and fine adjusting frequency by turning the noise frequency Hz vernier control.
4. Select desired SEQUENCE LENGTH by depressing appropriate push button.
5. Select noise amplitude by setting OUTPUT ATTEN (dB) control to appropriate attenuation position and fine adjusting noise to desired amplitude with OUTPUT VERNIER (dB) control.

Connect Signal and Chassis Grounds

The instrument is shipped from the factory with the signal ground floating above chassis ground, unless otherwise specified. A common signal/chassis ground can be obtained as follows:

1. Remove power cord.
2. Loosen two captive thumb screws on rear panel and remove panel.
3. Solder a jumper wire between the ground lugs (green wires) of the SYNC OUT connector and the power connector (Figure 2-4).

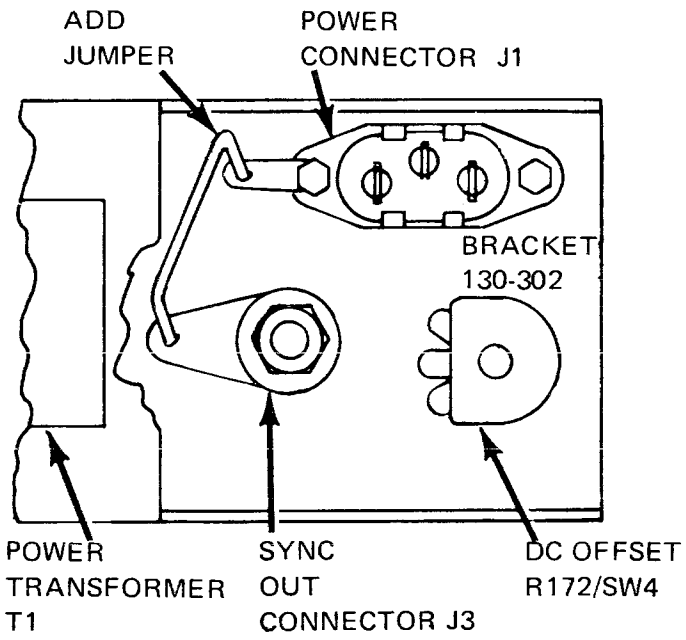

Figure 2-2. Common Ground Connection Diagram

Converting Output Impedance to 600 Ohms

Unless otherwise specified, this instrument was shipped with 50 ohm output impedance, but can be converted to 600 ohm output if needed. Place a 550Ω resistor in series with the wire leading from the center tap of the 50Ω OUT BNC and the attenuator control.

Converting to 230-Volt Line Power

Instruments are shipped from the factory with the power transformer connected for 115-volt line power, unless ordered for 230-volt use. Converting a 115-volt unit for 230-volt operation is a simple matter.

1. Remove power cord.
2. Loosen two captive thumb screws on rear panel and remove panel.
3. The conversion switch is located on the chassis. Use a thin-bladed screwdriver to move the 115-230 switch to the 230 position.
4. Replace 1/4-ampere fuse with a 1/8-ampere fuse of the same type.

SECTION 3
CIRCUIT DESCRIPTION

GENERAL DESCRIPTION

Refer to the block diagram of the Model 132 VCG/ Noise Generator, Figure 3-1.

Basically, a square wave is applied to the input of an integrator composed of a wide-band differential dc amplifier, integrating resistor and capacitor. Output of the integrator is fed into the hysteresis switch. The hysteresis and output switches function like a Schmitt trigger with the limit points set at the waveform extremes, firing when the triangle wave reaches +1.25 volts and −1.25 volts. When firing occurs, the hysteresis and output switches are set, reversing the square wave fed into the integrator. Reversal of the square wave causes the triangle wave to reverse direc-

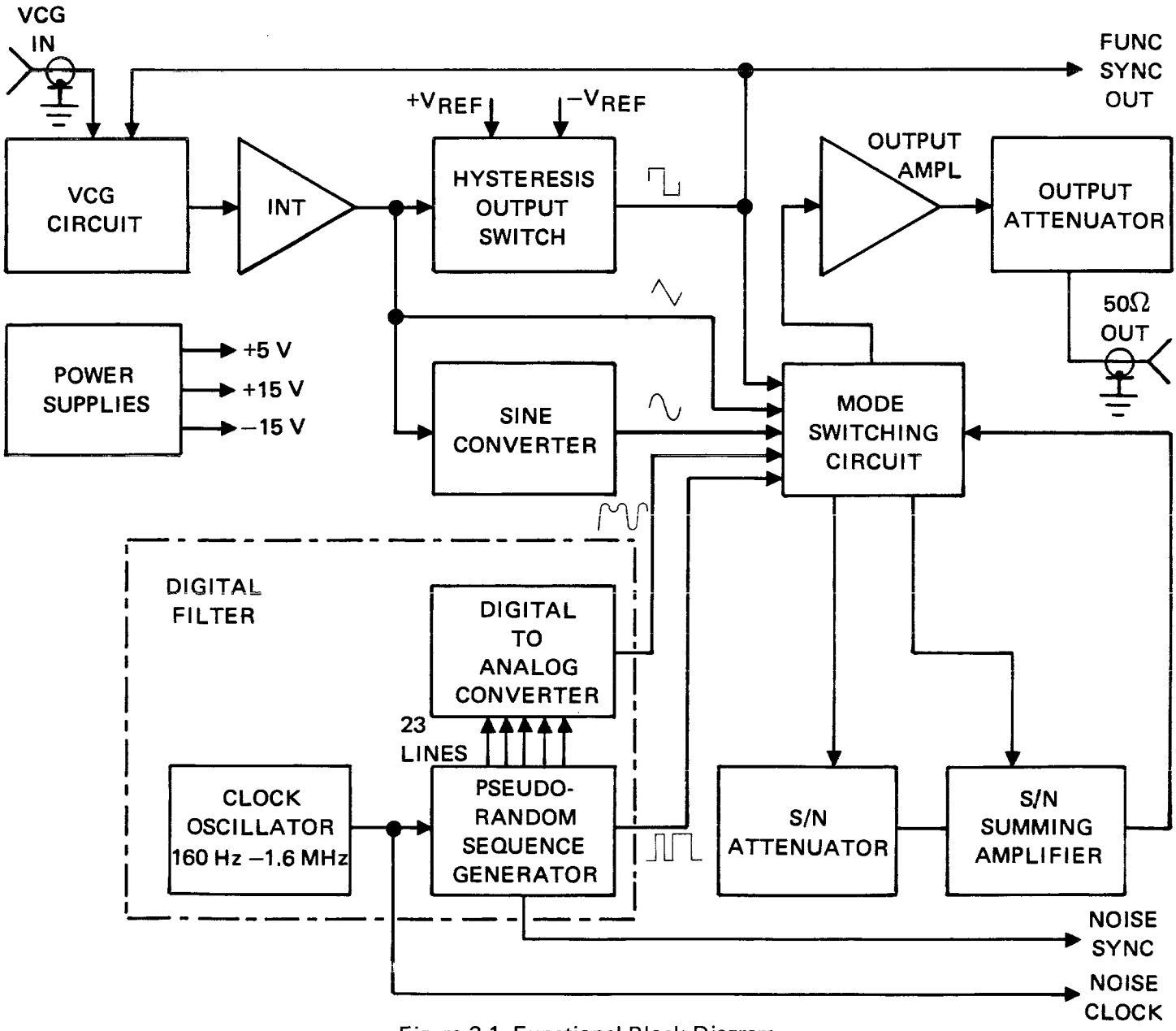

Figure 3-1. Functional Block Diagram

tion. The result is simultaneous generation of a square wave and triangle wave of the same frequency with the positive half cycle of the square wave coincident with the negative slope of the triangle wave.

The magnitude of the capacitor across the integrator and amplitude of the current into the integrator determine the frequency of oscillation. Capacitance across the integrator is changed by rotating the frequency Hz selector. Amplitude of the current into the integrator is determined by four parameters which are summed in the VCG circuit: (1) hysteresis switch output, (2) the frequency dial voltage, (3) the frequency vernier voltage, (4) the VCG analog voltage input and (5) the analog noise when in the FM mode.

The sine wave is produced by feeding the triangle wave into a shaping network composed of resistors and diodes. As the triangle wave voltage passes through zero, loading of the triangle wave is minimal and thus the slope is maximum. As the triangle voltage increases, diodes with current limiting resistors conduct and successively cause the slope of the output to be reduced.

Since the diode break points are mathematically computed and fitted to the true sine shape, the resultant waveform resembles a pure sine wave. Using a complementary pair of diodes on each break point, the circuitry is completely symmetrical about ground. The sine wave, produced by shaping, is considerably less in amplitude than the triangle wave input and is thus amplified to be equal to the triangle wave.

Either square, triangle, or sine waveforms can be selected as a signal source. The noise source is derived from a digital filter. A clock oscillator of 160 Hz to 1.6 MHz range functions as a trigger source for the digital pseudo-random sequence generator (PRSG). Output of the PRSG is a random binary signal that can function as digital noise. The number of bits in each sequence can be selected by the SEQUENCE LENGTH controls. Parallel data is fed from the PRSG to the digital-to-analog converter where the information is summed and filtered to provide a random analog noise signal.

The selected sine, triangle, square, analog noise, or digital noise signal is routed to the mode control circuitry where one of the following modes of operation is selected: Function (FUNC); frequency modulation (FM); signal-to-noise (S/N); or noise-to-signal (N/S). In the signal-to-noise and noise-to-signal modes, one signal is fed to the S/N attenuator and then mixed with the other signal in the S/N summing amplifier in a known dB ratio selected by the S/N attenuator. Output of the mode switching circuit is coupled to the output amplifier. From the output amplifier the signal is fed to the precision output attenuator and finally to a 50Ω output connector.

All circuits, except for the hysteresis switch, output amplifier, and PRSG, operate from ±15 volt supplies. The hysteresis switch and power amplifier require ±6 volts and ±22 volts, respectively. Operation of the PRSG requires a +5 V supply.

SECTION 4
MAINTENANCE

INTRODUCTION

This section provides instructions for testing, calibrating, troubleshooting, and repairing the Model 132. The instructions are concise and for the experienced electronics technician or field engineer. Wavetek maintains a factory-repair department for those customers not possessing the necessary personnel or test equipment to maintain the instrument. If an instrument is returned to the factory for calibration or repair, a detailed description of the specific problem should be attached to facilitate the turn around time. Test point and adjustment locations are illustrated in Section 5.

RECOMMENDED TEST EQUIPMENT

Table 4-1 contains a list of recommended test equipment. Any test equipment having equivalent accuracies may be substituted for those listed.

Table 4-1. TEST EQUIPMENT

Name	Required Characteristics
Oscilloscope	To 30 MHz
Plug-in	Dual Channel
Plug-in	Peak mV measuring capability
Distortion Analyzer	To 600 kHz
Spectrum Analyzer	To 50 MHz
Display	
IF Section	
RF Section	
Voltmeter	Millivolt dc measurement (10 millivolt resolution)
Counter	To 10 MHz
Scope Probe	X1 Attenuation

CHECKOUT AND CALIBRATION

The following paragraphs provide complete sequential calibration procedures for the Model 132. Instrument checkout procedures are indicated by a check mark (√) following the procedure title. A quick checkout of the instrument can be performed by comparing the indicated parameters with the tolerances given in the Specifications of Section 1.

NOTE

The entire calibration procedure must be read first to determine initial control settings and test equipment connections before attempting checkout.

Preliminary Procedures

1. Set FREQ HZ selector to X1K position.
2. Depress MODE – FUNC push button.
3. Set OUTPUT ATTEN (dB) selector to 0 position.
4. Allow one-half hour for warm-up.
5. DC OFFSET C.C.W. (DETENT) CE, 9-15-

Power Supply Regulation

1. Connect voltmeter between TP1 (common) and TP2 (+) on main board. Adjust R104 for +15 Vdc ±100 mV.
2. Connect voltmeter between TP1 (common) and TP3 (–). Since the negative supply is referenced to the +15 V supply, the voltmeter should indicate –15 Vdc ±100 mV.
3. Connect voltmeter between +5 V and location DG on ~~analog~~ ASSY LOGIC board. Verify that voltage is +4.75 to +5.25 volts.

Square Wave Amplitude Symmetry

1. Set function selector to ⊓⊔ .
2. Connect oscilloscope, with peak mV plug-in, to tab of switch SW3B, as illustrated below.

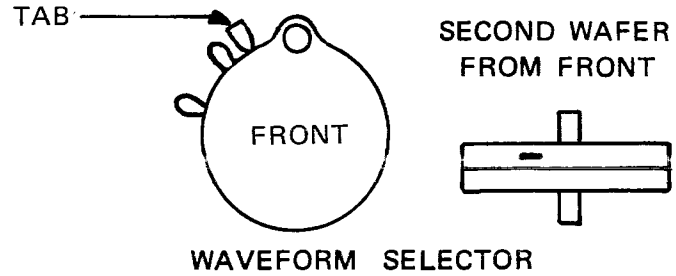

WAVEFORM SELECTOR

3. Using a comparator, set the positive peak to the center of the scope. Switch the comparator to the negative peak and adjust R121 so that the negative peak equals the positive peak.

Triangle Amplitude

1. Set frequency dial for 2.0 (X1K range) and function selector to $\wedge\!\vee$.
2. Connect oscilloscope, with peak mV plug-in, to tab of switch SW3B, as illustrated under "Square Wave Amplitude Symmetry."
3. Adjust R56 on main board for positive peak at +1.25 volts ±5 mV (see sketch).
4. Adjust R59 for negative peak at −1.25 V ±5 mV.

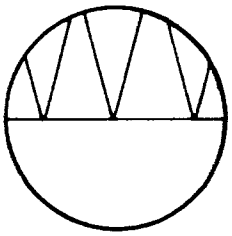

Negative Peak

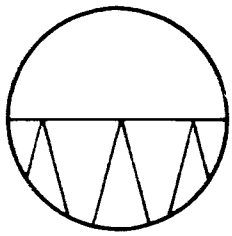

Positive Peak

Output Amplifier √

1. Connect oscilloscope to 50Ω OUT connector with 50Ω terminator loaded at oscilloscope (⌐¬ function).
2. Set FREQ HZ selector for X1K (FREQ VERNIER fully cw) and frequency dial at 2.0.
3. Turn OUTPUT VERNIER (dB) fully ccw.
4. Adjust R150 for amplitude symmetry about ground.
5. Set FREQ HZ selector for X1M (2.0 dial setting).
6. Turn OUTPUT VERNIER (dB) fully cw.
7. Adjust C64 to provide a flat square wave with 100 nanosecond rise time.

First VCG Null √

1. Connect oscilloscope to 50Ω OUT connector.
2. Set FREQ HZ selector to X1K. Set frequency dial to 0.02 and turn FREQ VERNIER to CAL position.
3. Short and open VCG IN to signal ground (outside of BNC connector) while monitoring output frequency variation. Adjust R11 for minimum frequency change using X20 horizontal magnification on oscilloscope.

Time Symmetry √

1. Connect unit and oscilloscope, with dual channel plug-in set for alternate display, as shown in Figure 4-1.
2. Set FREQ HZ selector for X100K with FREQ VERNIER in CAL position (⌐¬ function).
3. Set frequency dial to 0.02 to provide 2 kHz display on oscilloscope.
4. Adjust R28 for time symmetry with frequency dial set to 0.02.
5. Turn FREQ VERNIER fully ccw and adjust R22 for time symmetry.

NOTE

Interaction occurs between R28 and R22. Repeat steps 4 and 5 until 1% symmetry accuracy is met. (On oscilloscope 1% — 1 cm at 0.1 µsec with X10 horizontal magnification.)

6. Check for waveform time symmetry at the 0.2 and 2 frequency dial settings.
7. Check to assure FREQ HZ selector is set to X100K position with FREQ VERNIER turned fully ccw.
8. Turn frequency dial fully cw.
9. Check frequency ratio from top range setting to 1/1000 of range (not dial setting).
10. Adjust R8, if necessary, for slightly greater than 1000:1 ratio.

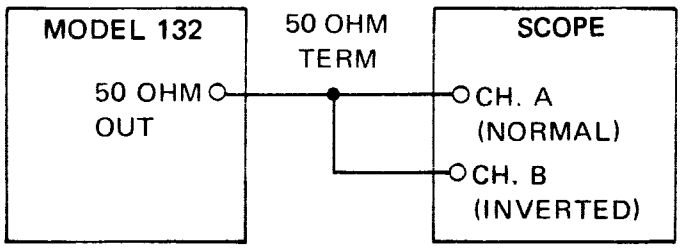

Trigger: Internal

Display: Alternate

Time Base: 50 microseconds/cm for 1/100 of 200 kHz

500 microseconds/cm for 1/1000 of 200 kHz

Figure 4-1.
Time Symmetry Measurement for Test Setup

Frequency Calibration ✓

1. Connect counter to 50Ω OUT connector.
2. Set FREQ HZ selector to X10K and FREQ VERNIER fully cw.
3. Align 2.0 dial mark with the dial indicator index and alternately switch from X10K to X1K range while adjusting R4 for a balanced error between the two positions of less than 2%.
4. Set FREQ HZ selector to X100K and dial at 2.0.
5. Adjust C16 to obtain 200.0 kHz on counter display.
6. Set FREQ HZ selector to X1M. Adjust C12 to obtain 2.00 MHz on counter display.
7. Dial alignment — No alignment is necessary if the dial is the push-on type. If it has a set screw, consult the factory for CAL procedure.

Sine Distortion, Amplitude, and Balance ✓

1. Set FREQ HZ selector for X1K, FREQ VERNIER fully cw, function selector to ∿ , and frequency dial at 2.0.
2. Connect oscilloscope, with peak mV plug-in, to orange wire on function switch.
3. Adjust R133 to obtain 2.5 V p-p ±25 mV output.
4. Adjust R128 to balance output.
5. Connect the unit, distortion analyzer, and oscilloscope as shown in Figure 4-2.
6. Adjust R126 and R127 for less than 0.5% sine distortion (see photo).
7. Set FREQ HZ selector to X10K.

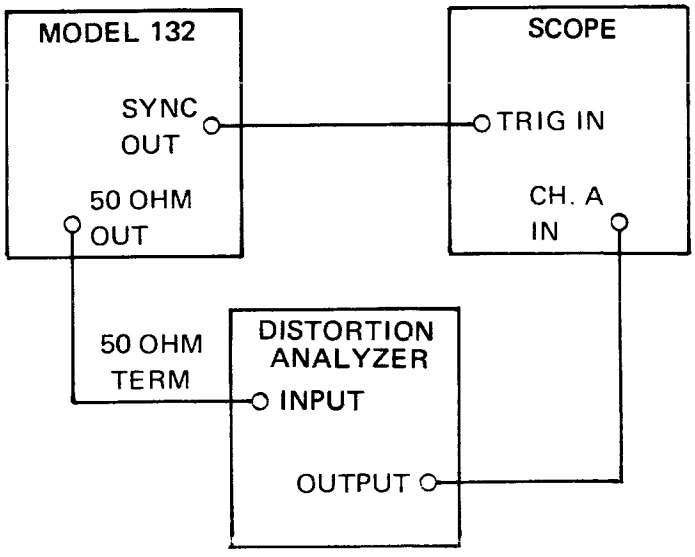

Figure 4-2. Distortion Analysis Test Setup

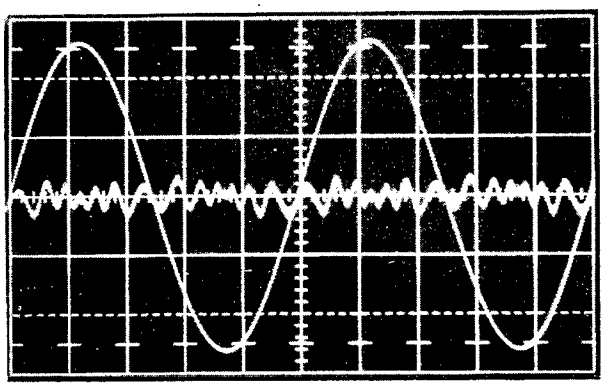

8. Repeat step 6 for steps 1 and 7 to obtain less than 0.5% distortion at both X1K and X10K ranges.
9. Repeat steps 2, 3 and 4.
10. Connect spectrum analyzer and check sine distortion at 2 MHz.

Clock Frequency Calibration ✓

1. Remove power from unit.
2. Remove two Phillips head screws from logic board (one from left side of board, one from right side).
3. Remove two 2½" standoff screws at rear of logic board.
4. Lift front edge of logic board until board is standing upright. (Right rear edge of logic board will now be resting on sine module.
5. Place at least ¼" of styrofoam, or other suitable insulating material, between BNC connectors and main board. (BNC connectors are located near left rear edge of logic board.)

CAUTION

Failure to adequately insulate BNC connectors from main board may result in electrical damage.

6. Apply power to unit.
7. Set function selector to ⎍⎍ position.
8. Set NOISE FREQ HZ selector to 1.6M position and NOISE FREQ HZ vernier fully cw.
9. Connect counter to NOISE CLOCK connector (rear panel).
10. Adjust C6 on digital board for 1.6 MHz (ideally 1.62 MHz).
11. Turn NOISE FREQ HZ vernier fully ccw and adjust R2 for 150 kHz ±1 kHz.

Digital Noise Amplitude Symmetry ✓

1. Set function selector to ⎍⎍⎍, NOISE FREQ HZ selector to 160 kHz, and depress SEQUENCE LENGTH — 2^{15} — 1 push button.
2. Connect oscilloscope, with peak mV plug-in, to location DN on digital board.
3. Adjust R36, using comparator, to provide a positive peak of +1.25 V ±10 mV.
4. Adjust R39, using comparator, to provide a negative peak of −1.25 V ±10 mV.

Analog Noise Amplitude Symmetry

1. Connect BNC cable to NOISE SYNC connector (rear panel) and sync connector on oscilloscope.
2. Depress SEQUENCE LENGTH — 2^{15} — 1 push button.
3. Connect oscilloscope to location AN on digital board.
4. Adjust R22 (gain) and R23 (balance) to provide a 2.5 V p-p signal centered about ground.

S/N Frequency Compensation ✓

1. Set function selector to ⎍⎍ .
2. Depress MODE — S/N push button.
3. Set frequency dial to 1.0 and FREQ HZ selector to X100K (100 kHz).
4. Set S/N — N/S (dB) selector to +50 position and turn vernier to +9 position to provide approximately +59 dB.
5. Turn OUTPUT VERNIER (dB) full cw.
6. Connect oscilloscope to 50Ω OUT connector with 50Ω terminator (⎍⎍ function).
7. Adjust C5 on analog board for a slightly peaked square wave response, as illustrated below.

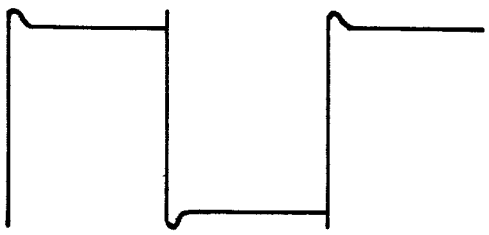

8. Remove power from unit.
9. Remove material insulating BNC connectors from main board.
10. Lower logic board and align holes in side of board with screw holes.
11. Install two side screws to secure logic board.
12. Install both 2½" standoff screws at rear of logic board.
13. Install cover on unit.

TROUBLESHOOTING

Basic Techniques

Troubleshooting the Model 132 requires no special technique. Listed below are a few reminders of basic electronics fault isolation.

1. Check control settings carefully. Many times an incorrect control setting, or a knob that has loosened on its shaft, will cause a false indication of a malfunction.
2. Check associated equipment connections. Make sure that all connections are securely connected to the correct connector.
3. Perform the checkout procedure. Many out-of-specification indications can be corrected by performing specific calibration procedures.
4. Visually check the interior of the instrument. Look for such indications as broken wires, charred components, loose leads, etc.

Troubleshooting Chart

Table 4-2 provides a list of possible malfunction symptoms, their probable causes, and the prescribed remedies. Also listed in this table are the test points at which measurements are to be made and the parameter tolerances at these points. To use the troubleshooting chart, locate the symptom listed in Column 1 and follow the corresponding procedures. Localize the fault to a specific stage by checking the parameters given for the major test points. Then check the dc operating voltages at the pins of solid-state devices. Check associated passive elements with a high input impedance ohmmeter (power off) before replacing a suspected semiconductor element.

Troubleshooting Hints

The interactive nature of a closed loop presents a somewhat special problem when approached from a troubleshooting standpoint. The simplest way to reduce problem complexity is to open the loop, thereby removing the interaction. The basic units of the loop can then be tested individually. The following step-by-step procedure describes how this is done. (The generator loop is all contained on the main board.) Consult the next paragraph for removal of cover and panels.

1. Set instrument controls for 20 V p-p, 2 kHz sine-wave output.

Table 4-2. TROUBLESHOOTING CHART

Symptom	Probable Cause	Corrective Procedures
No outputs at 50Ω OUT connector	Blown Fuse	Replace F1. a. 1/4A – 115 Vac b. 1/8A – 220 Vac
	Power Supply	Check TP1/TP2 for +15 V; +5 V/DG for +5 V; TP1/TP3 for –15 V; TP1/TP5 for +6 V; TP1/TP6 for –6 V. Troubleshoot associated regulator.
	Output Amplifier	Check at PH for waveform as selected by position of waveform switch. a. If waveform is present, troubleshoot output amplifier. b. If no waveforms are present, refer to Troubleshooting Hints.
	50Ω Attenuator	Check to see that output is present at switch. If it is, the switch is defective.
No sine wave output	Sine Amplifier	Check for 260 mV p-p sine wave at pin 4 of IC8. a. If present, check IC8 circuit. *NOTE: Triangle wave must be present at pin 2 of A1 to obtain sine wave output.* b. If not present, check A1 circuit.
No triangle, sine, or square wave	Generator Loop	Refer to Troubleshooting Hints.
No	Power Supply	Check for correct voltages.
	Clock Oscillator	Check Q1 – Q8 circuit.
	Faulty IC	Refer to Troubleshooting Hints.
	Shaping Amplifier	Check Q12 – Q14 circuit.
No	No	(See above.)
	Faulty Summing Amplifier	Check Q9 – Q11 circuit.
	Faulty Low Pass Filter	Check IC1 circuit.
No output in S/N or N/S	Faulty Summing Amplifier	Check IC2 circuit.
No noise in S/N mode	Faulty Attenuator	Check Test Point AW for noise. If not present and controllable by S/N – N/S (dB) switch, the switch is defective. If present, check IC1 and IC2 circuits.

Table 4-2. TROUBLESHOOTING CHART (Continued)

Symptom	Probable Cause	Corrective Procedures
All waveforms low in amplitude	Power Amplifier	a. Check front panel amplitude control. b. Perform balance adjustment for power amplifier.
	Power Supply	Check for correct voltages.
All waveforms low in amplitude	Power Amplifier	a. Check front panel amplitude control. b. Perform balance adjustment for power amplifier.
	Power Supply	Check for correct voltages.
Frequency out of tolerance	Power Supply	Check for correct power supply voltage as stated above.
	Maladjustment	Perform calibration procedure.
Sine wave not in spec	Maladjustment	Perform sine distortion, amplitude, and balance adjustments.
	Sine Converter	Check for 260 mV p-p sine wave at pin 4 of IC8. a. If normal, check sine amplifier IC8. b. If normal, check A1 circuit.
Time symmetry of waveforms not correct	Maladjustment	Perform time symmetry and frequency adjustments.

2. Check at coaxial-wire lug of function selector switch for a 2.5 V p-p square wave. If normal, check output amplifier (Q34 – Q40).
3. Unsolder and lift the end of R51 (TP7). This is the output of the integrator and input to the hysteresis switch. The generator loop has now been opened.
4. Inject a 2.5 V p-p triangle waveform into the hysteresis switch input lead (TP7).
5. Check at the coaxial-wire lug of the function selector switch for a 2.5 V p-p square wave at the injected frequency.
   a. If present, hysteresis and output switches are functioning normally. Proceed to Step 6.
   b. If abnormal, check Q6 – Q16 stages.
6. Vary frequency dial from ccw to cw while observing TP11 with a scope. Voltage at this point should remain at 0 volts throughout dial rotation. If a voltage variation is observed, check IC1 stage.
7. Vary frequency dial from ccw to cw while observing TP4. Voltage reading should vary from 0 to approximately –6 volts. If voltage does not vary, check IC2 stage and IC1 stage.
8. Vary frequency dial from ccw to cw while observing TP9. Voltage reading should remain at 0 volts. If voltage varies, check IC3 stage.
9. Vary frequency dial from ccw to cw while observing TP10. Voltage should vary from 0 V to approximately +6 V. If voltage does not vary, check IC2 stage and IC3 stage.
10. Vary frequency dial from ccw to cw while observing TP8. Voltage reading should remain at 0 volts. If voltage varies, check IC4 and IC5 stages.
11. Reinstall R51.

DIGITAL BOARD

If a fault in the logic circuit of the digital filter is sus-

pected, the following procedure may be used to isolate the bad IC.

1. Set clock frequency to 1.0 MHz.
2. Verify that a clock pulse appears at pins 9 and 12 of IC2 through IC13.
3. Short circuit test point RT to DG. (This opens the digital feedback loop.)
4. Check for logic "zero" at pins 3 and 5 of IC2 through IC13.
5. Check for logic "one" at pins 2 and 6 of IC2 through IC13.
6. Check logic states of all gates using the known states of the register.

REMOVAL OF DUST COVERS AND PANELS

1. To gain access for calibration or maintenance, proceed as follows:
   a. Remove power cord.
   b. Loosen the two knurled captive screws on the rear panel.
   c. Pull off the rear panel.
   d. Remove the cover.
2. To gain access to the digital board, proceed as follows:
   a. Remove the four screws holding the digital board.
   b. Rotate the board upward using the rear of the instrument as a pivot point.
3. To gain access to the analog board and/or the main board, proceed as follows:
   a. Remove digital board.
   b. Remove one screw and shoulder washer holding 5 V regulator to side plate.
   c. Remove all knobs below the push button switches.
   d. Remove two nuts, washers, and insulators holding the switch assembly to the front panel.
   e. Remove two screws holding rear bracket to chassis.
   f. Disconnect all AMP pin connections between main board and analog board.
   g. Unsolder two wires from 50Ω OUT connector.
   h. Unsolder coaxial cable from main board to 50Ω attenuator.
   i. Remove four screws holding analog board to side plates.
   j. Carefully lift rear of analog board to clear the sine converter and slide analog board, rear bracket and digital board away from the front panel.
4. To gain access to any part mounted on upper rear bracket, proceed as follows:
   a. Remove digital board.
   b. Remove two screws holding lower and upper rear brackets to chassis.
   c. Remove one heat sink mounting screw.
   d. Remove bottom transformer mounting block screw.
   e. Remove the two screws, lock washers and hex nuts holding two wafers of FREQ HZ switch to bracket assembly.
   f. Remove two screws holding bracket assembly to main board.
   g. Carefully pull bracket assembly to rear to obtain working room. Enough slack is available in the wiring for all normal operations.
5. To remove front panel, proceed as follows:
   a. Remove rear panel and dust cover as previously described.
   b. Remove all knobs, except frequency dial.
   c. Unsolder BNC connections.
   d. Tag and unsolder frequency-dial potentiometer leads.
   e. Pull light bulb from indicator lens.
   f. Remove four front panel retaining screws.
   g. Remove two hex nuts, lock washers, and shoulder washers holding switch bracket assembly to front panel.
   h. Carefully pull off front panel with frequency dial/potentiometer still attached.

REPLACEMENT OF SWITCH WAFERS AND POTENTIOMETERS

1. To replace FREQ HZ switch wafer C or D or the FREQ VERNIER potentiometer, proceed as follows:
   a. Remove rear panel and dust cover as previously described.
   b. Separate bracket assembly from chassis as previously described.
   c. Tag and unsolder leads to part being replaced.
   d. Pull defective part off shaft and repair or replace with recommended replacement part.
2. To replace FREQ HZ switch wafer A or B, proceed as follows:
   a. Remove rear panel and dust cover as previously described.
   b. Remove front panel as previously described.

c. Tag and unsolder wires to switch wafers A and B.
d. Remove digital and analog boards as previously described.
e. Unsolder wafer B PC-tabs from printed circuit boards.
f. Lift switch shaft slightly to free PC-tabs, rotate switch shaft so wafers clear board parts, and pull shaft end free of rear-mounted wafers C and D.
g. Repair or replace defective part.

3. To repair or replace function selector wafers or OUTPUT VERNIER (dB) potentiometer, proceed as follows:
a. Remove rear panel and dust cover as previously described.
b. Tag and unsolder wires to defective part.
c. Remove digital and analog boards as previously described.
d. Unsolder potentiometer PC-tabs, lift shaft slightly to free tabs, rotate switch shaft so wafers clear board parts, and pull switch/potentiometer assembly out of front panel hole.
e. Repair or replace defective part.

REPLACEMENT OF SINE CONVERTER

1. Remove rear panel and dust cover as previously described.
2. Remove digital board as previously described
3. Unsolder the five pins of sine converter A1 from top of the printed circuit board, using a solder syringe.
4. Lift assembly from bottom of the board; a thin pencil-type soldering iron can be used, if necessary, to apply temporary heat during removal.
5. Replace sine converter.

SECTION 5
DATA PACKAGE

INTRODUCTION

This section contains data packages for the Model 132. Each data package is a quick-access document, containing maintenance data arranged for convenient viewing of the schematic diagram and all supporting data. Each data package includes a parts-location illustration, a replaceable parts list, voltage/waveform data, and a schematic diagram. Voltage and waveform data are provided on the diagrams at indicated test points as an aid to troubleshooting.

RECOMMENDED SPARE PARTS LIST

Information is provided to maintain the instrument on a component level. Price and delivery information should be obtained from the Wavetek representative in your area or directly from the factory.

DESCRIPTION	MANUFACTURER	PART NO.	QTY
DIODE	FAIRCHILD	FD6666	2
DIODE	SEMTECH	SCE–1	2
DIODE	WAVETEK	130–506	1
FUSE 1/8A 250 V	BUSSMAN	MDL 1/8	1
FUSE 1/4A 115 V	LITTELFUSE	313–250	
IC	RCA	*CA3039 (–18)	1
IC	RCA	*CA3030 (–15)	1
IC	RCA	*CA3030 (–16)	1
IC	RCA	*CA3036 (–17)	1
IC	SIGNETICS	SG310	1
IC	NATIONAL SEMICONDUCTOR	NS7400	1
IC	NATIONAL SEMICONDUCTOR	NS7402	1
IC	NATIONAL SEMICONDUCTOR	NS7404	1
IC	NATIONAL SEMICONDUCTOR	NS7410	1
IC	NATIONAL SEMICONDUCTOR	NS7420	1
IC	NATIONAL SEMICONDUCTOR	NS7430	1
IC	NATIONAL SEMICONDUCTOR	NS7486	1
IC	NATIONAL SEMICONDUCTOR	NS74107	1
IC	NATIONAL SEMICONDUCTOR	LM301A	1
IC	FAIRCHILD	7805393	1
IC	FAIRCHILD	*μA709C (–14)	1
IC	FAIRCHILD	*μA709C (–13)	1
LAMP	MURA	L28/40	1
SINE MODULE	WAVETEK	130–011	1
TRANSISTOR	FAIRCHILD	2N2905A	1
TRANSISTOR	FAIRCHILD	2N2905	1
TRANSISTOR	FAIRCHILD	2N3299	1
TRANSISTOR	FAIRCHILD	2N3646	2
TRANSISTOR	FAIRCHILD	2N3638	1

DESCRIPTION	MANUFACTURER	PART NO.	QTY
TRANSISTOR	FAIRCHILD	2N3638A	1
TRANSISTOR	FAIRCHILD	2N3642	1
TRANSISTOR	FAIRCHILD	L08	1
TRANSISTOR	FAIRCHILD, MOTOROLA	2N3640	1
TRANSISTOR	FAIRCHILD	MPS L08	1
TRANSISTOR	FAIRCHILD	2N2369	1
MATCHED TRANSISTOR	FAIRCHILD	*2N2905 (−8)	2
MATCHED TRANSISTOR	FAIRCHILD	*2N3646 (−11)	2
MATCHED TRANSISTOR	FAIRCHILD	*2N3638 (−9)	2
MATCHED TRANSISTOR	MOTOROLA	*2N3640 (−10)	2
TRANSISTOR	MOTOROLA	MPS3640	1
TRANSISTOR	MOTOROLA	2N3903	1
TRANSISTOR	MOTOROLA	2N3905	1
TRANSISTOR	SPRAGUE	TD101	1
TRANSISTOR	TEXAS INST	*TIP 29	1
TRANSISTOR	TEXAS INST	*TIP 30	1

* Denotes special parts that should be ordered from Wavetek. These parts have been tested or selected by Wavetek for optimum performance.

CROSS REFERENCE FOR DRAWING NUMBERS

Drawings	Old Number	New Number
Chassis Assembly	132-000	0102-00-0281
Chassis Schematic	132-200	0004-00-0022
Chassis Parts List	*	1101-00-0022
Bracket Assembly	130-001	0102-00-0324
Bracket Parts List	*	1101-00-0065
Main Board Assembly	132-010	0101-00-0039
Main Board Schematic	132-210	0103-00-0039
Main Board Parts List	*	1101-00-0039
Amplifier Assembly	132-012	0101-00-0040
Amplifier Schematic	132-212	0103-00-0040
Amplifier Parts List	*	1100-00-0040
Logic Assembly	132-013	0101-00-0041
Logic Schematic	132-213	0103-00-0041
Logic Parts List	*	1100-00-0041
Output Attenuator Assembly	142-003	1202-00-0008
Output Attenuator Schematic	142-203	*
Output Attenuator Parts List	*	*
S/N - N/S (dB) Attenuator Assembly	132-001	1202-00-0003
S/N - N/S (dB) Attenuator Parts List	*	*
Freq Sw Assembly	132-002	1202-00-0004
Freq Sw Parts List	*	*

*Same as Assembly Number

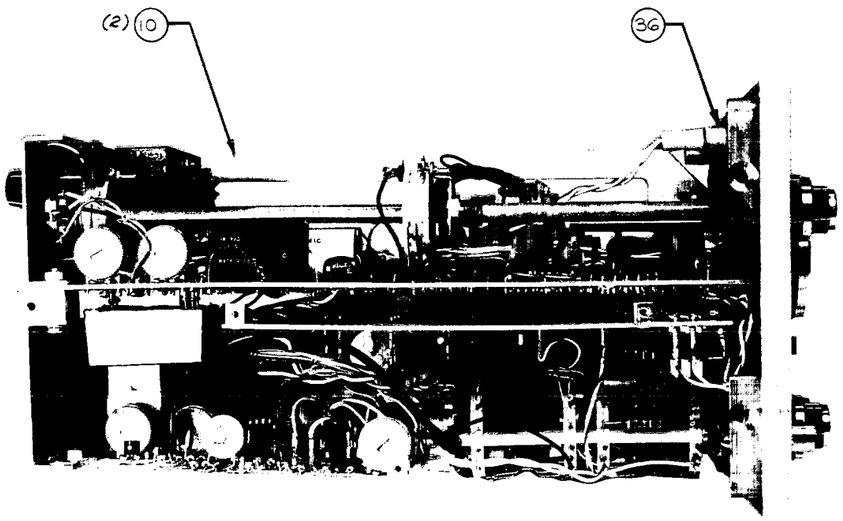

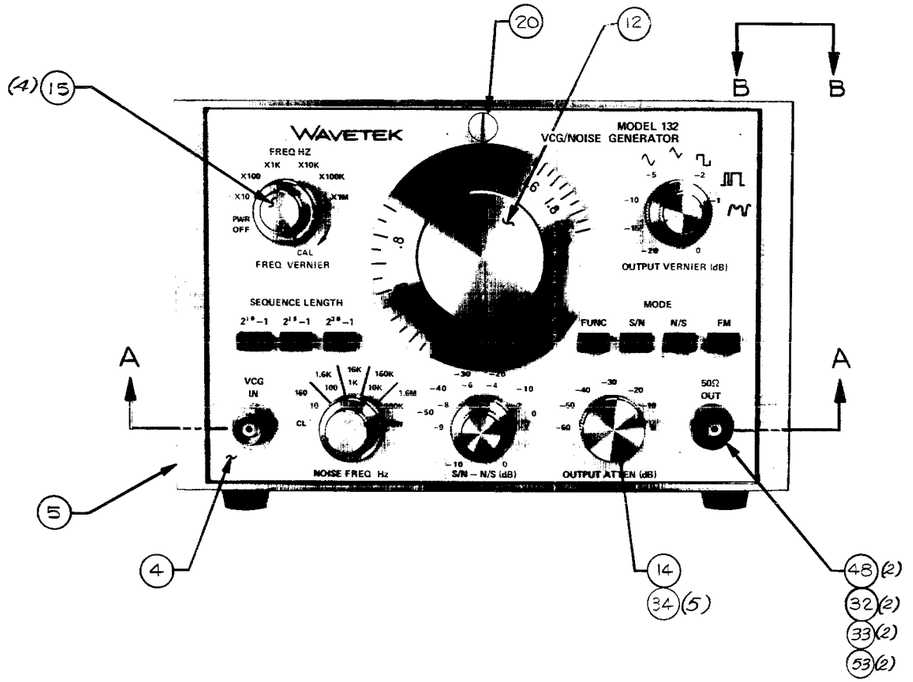

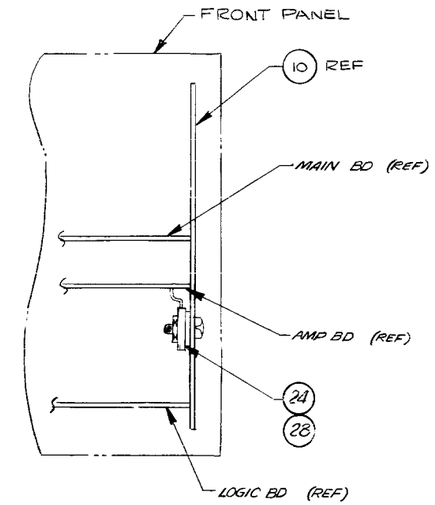

IC3 INSTALLATION
(VIEWED FROM FRONT PANEL)

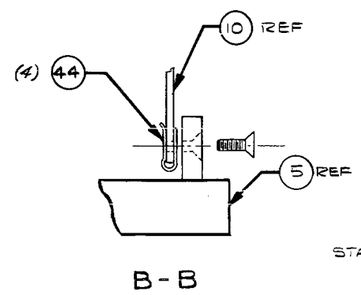

B-B

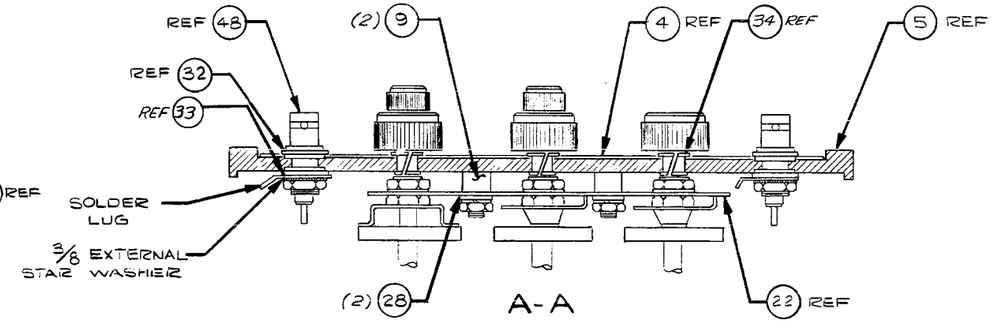

A-A

rev	ecn	by	date	app.
F	ECN 1482	RO	10-20-76	
E	ECN [illegible]	[illegible]	5/21/74	[illegible]
D	ECN 674	[illegible]	[illegible]	RC
C	ECN-491	[illegible]	[illegible]	RC
B	ECN 441	[illegible]	[illegible]	RC
A	ECN #422	B.R.	4-21-72	R.C.

tolerance unless otherwise specified
.XXX ± .010
.XX ± .030

WAVETEK san diego, calif

scale N/A

by B. REDMAN | date 23 FEB 72 | app. [illegible]

material N/A

title CHASSIS ASSY

model no. 132 | dwg no. 0102-00-0281 | rev F

finish N/A

this document contains proprietary information and design rights belonging to WAVETEK and may not be used or reproduced for any reason except calibration, operation and maintenance without written authorization.

REVISIONS			
REV	DESCRIPTION	DATE	APPROVED

MAIN BOARD
ASSY 0101-00-0039
SCHEM 0103-00-0039

TP1 TP2 TP3

REAR PANEL

DC OFFSET

R172

SW4

CAL

J3 SYNC OUT

SW1-C

115/230

SW2

T1 1204-00-0478

BLK

W/BLK

RED

W/RED

RED

GRY

W/GRY

SW1-D

FUSE 1/4A (115V) 1/8A (230V)

J1

HI

GND

NEUT

SW3

GRN/YEL

WHT/VEL

POWER

FRONT PANEL CONTROL

FREQ VERNIER

R10

BRACKET ASSY
1202-00-0001

BRACKET
1400-00-1633

T2 1204-00-0482

GRN

W/GRN

GRN

GRN/BLK

WHT/GRY

GRY

WHT/BLK

BLK

NOISE SYNC J5

NOISE CLOCK J6

AMPLIFIER BOARD
ASSY 1100-00-0040
SCHEM 0103-00-0040

TERMINAL BOARD
1700-00-0188

LOGIC BOARD
ASSY 1100-00-0041
SCHEM 0103-00-0041

FRONT PANEL

J1 POWER

R1 5K FREQ CONTROL

J2 VCG IN

J4 50Ω OUT

IN OUT

OUTPUT ATTEN (dB)
ASSY 1202-00-0008

NOISE FREQ Hz
ASSY 1202-00-0004

S/N - N/S (dB)
ASSY 1202-00-0003

HI
VAR
LOW

A	ECN 1735	RC	5-1-72	R.C.
REV	ECN	BY	DATE	APP

TOLERANCE UNLESS OTHERWISE SPEC
.XXX ± .010
.XX ± .030
ANGLES ± 0°30'

WAVETEK SAN DIEGO, CALIFORNIA

SCALE N/A

BY B. REDMAN DATE 2-8-72 APP R. C.

MATERIAL N/A

FINISH N/A

TITLE SCHEMATIC — INSTRUMENT

MODEL NO. 132 DWG NO. 0004-00-0022 REV A

THIS DOCUMENT CONTAINS PROPRIETARY INFORMATION AND DESIGN RIGHTS BELONGING TO WAVETEK AND MAY NOT BE REPRODUCED FOR ANY REASON EXCEPT CALIBRATION, OPERATION, AND MAINTENANCE WITHOUT WRITTEN AUTHORIZATION.

THIS DOCUMENT CONTAINS PROPRIETARY INFORMATION AND DESIGN RIGHTS BELONGING TO WAVETEK AND MAY NOT BE REPRODUCED FOR ANY REASON EXCEPT CALIBRATION, OPERATION, AND MAINTENANCE WITHOUT WRITTEN AUTHORIZATION.

REV	ECN	BY	DATE	APP

REFERENCE DESIGNATORS	PART DESCRIPTION	ORIG-MFGR-PART-NO	MFGR	WAVETEK NO.	QTY/PT
ASE	ASSY DRAG, CHASSIS	0102-00-0201	WVTK	1102-00-0201	1
12	DIAL ASSY	130-353-4	WVTK	1401-00-1004	1
17	COVER ASSY	130-355-1	WVTK	1401-00-1017	1
1	PANEL,REAR FROM:1400-00-1022	132-303	WVTK	1401-00-1049	1
10	RAIL,SIDE	130-304	WVTK	1400-00-1075	2
4	PANEL,FT	132-300	WVTK	1401-00-1020	1
9	SPACER	132-306	WVTK	1400-00-1045	2
3	CASTING,FRONT FROM:1400-00-1081	132-301	WVTK	1400-00-1729	1
5	CASTING,REAR FROM:1400-00-1001	132-304	WVTK	1400-00-1759	1
8	SCREW	135-302	WVTK	1400-00-2004	2
20	INDICATOR,DIAL	141-317	WVTK	1400-00-2020	1
24	INSULATOR,MICA	142-311	WVTK	1400-00-2080	1
NONE	LABEL,I.D.	1400-00-8470	WVTK	1400-00-8470	1
48	BNC CONN	RC-7946	KING	2100-01-0002	2
55	SOLDER LUG	1497	SMITH	2100-04-0012	2
14	STD KNOB	RB-67-1-56-M	ROGAN	2400-01-0008	1

WAVETEK PARTS LIST	TITLE STD CHASSIS	ASSEMBLY NO. 1101-00-0022	REV G
		PAGE: 1	

REFERENCE DESIGNATORS	PART DESCRIPTION	ORIG-MFGR-PART-NO	MFGR	WAVETEK NO.	QTY/PT
15	COAX KNOB SET	RB-67-1-56+0-M-9	ROGAN	2400-01-0009	4
54	BUSHING NYLINER	4L2FF	THOMAS	2600-01-0002	3
44	SPEEDNUT,TYPE"U"	C0051-032-4	TINN	2600-04-0004	4
45	PRESS BOLT	RB-6-32-SM-10	ROGAN	2600-04-0004	2
27	PLUG BUTTON	PLM7241	UNCAR	2600-04-0010	2
52	FAST,CHASSIS	1541-811	USECO	2600-04-0021	4
37	CAPTIVE SCREW	CA1570-10-3-9	TRIUM	2600-25-0001	2
28	WASHER,SHOULDER	2660	SMITH	2600-26-0001	3
32	WASHER,SHOULDER	2668	SMITH	2600-27-0004	2
53	NYLON FLAT WASHER	2264-N-385	ANIXM	2600-28-0005	2
50	RETAINING RING	5305-31	TRUMB	2600-36-0002	1

WAVETEK PARTS LIST	TITLE STD CHASSIS	ASSEMBLY NO. 1101-00-0022	REV G
		PAGE: 2	

NOTE: UNLESS OTHERWISE SPECIFIED

REMOVE ALL BURRS AND BREAK SHARP EDGES	DRAWN	DATE	WAVETEK SAN DIEGO, CALIFORNIA
MATERIAL	PROJ ENGR		TITLE STD CHASSIS
FINISH WAVETEK PROCESS	TOLERANCE UNLESS OTHERWISE SPECIFIED .XXX ±.010 ANGLES ±1 .XX ±.030		
	DO NOT SCALE DWG		MODEL NO. 32 / DWG NO. 1101-00-0022 / REV G
	SCALE		CODE IDENT. 23338 / SHEET 1 OF 1

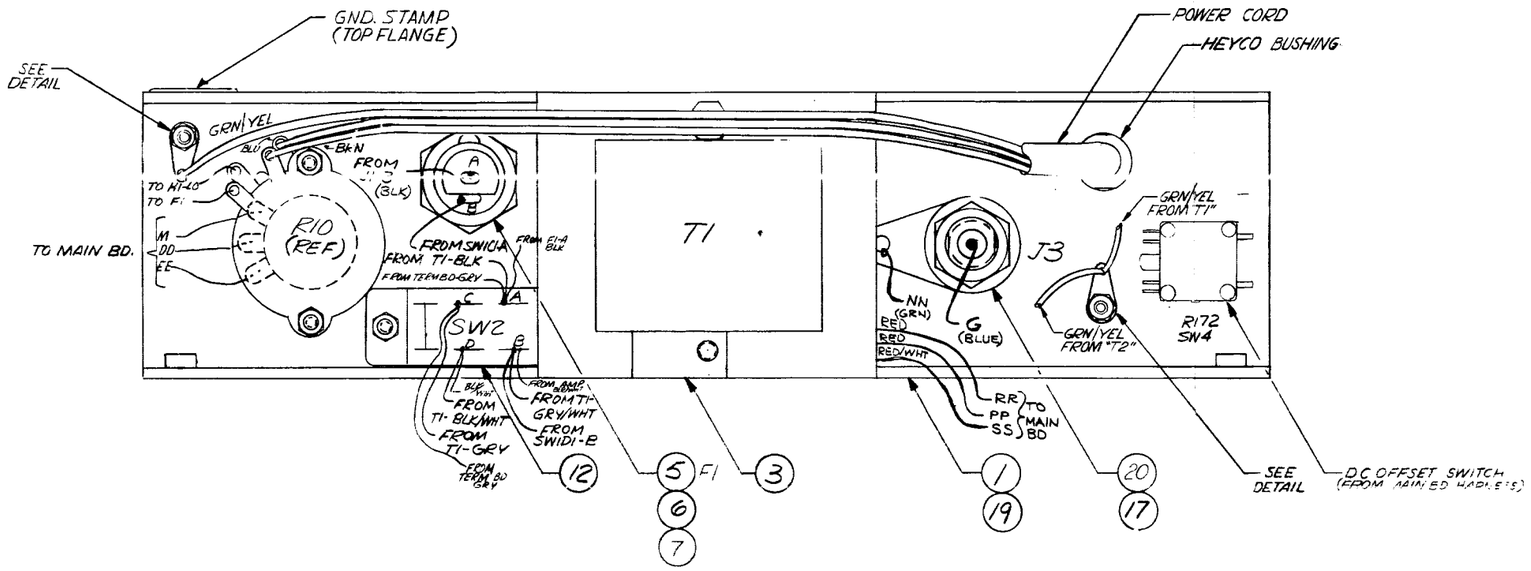

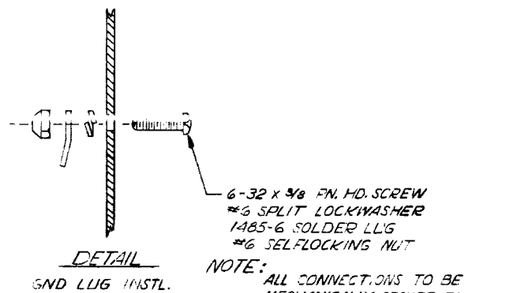

DETAIL
GND LUG INSTL.

NOTE: ALL CONNECTIONS TO BE MECHANICALLY SECURE TO LUGS PRIOR TO SOLDERING GROUND WIRES

USE THIS WIRING FOR 130 SERIES (NOT INCLUDING MODEL 136)

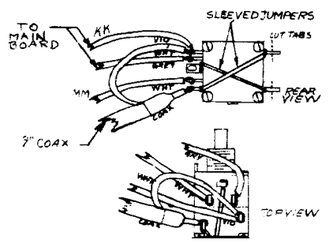

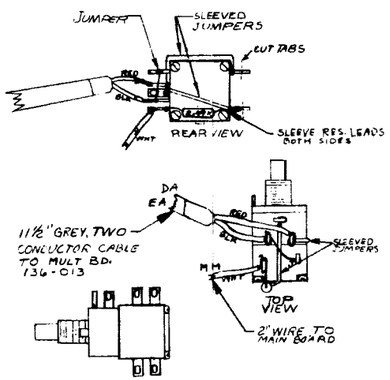

*J INDICATES JUMPER
USE #24 GAUGE BUSS WIRE & SLEEVING
SLEEVE RESISTOR LEADS WITH 24GA. TEFLON

SWITCH WIRING
FOR MODEL 136

rev	ecn	by	date	app.
K	ECN 1735	RO	5-16-78	RC
J	DDC #1462	DC	7/66	
H	ECN 1346	RO	10-27-75	
G	ECN 1242	RO	4-16-75	
F	ECN 898	BA	5-21-74	RC
E	ECN 501	JL	4-4-72	
D	J1 WAS AC3-G	JL	2/11/72	
C	ECN 341	NG	4/15/71	
B	COP 29	NG	2/16/70	
A	ECN 283	BB	11-11-69	

tolerance unless otherwise specified .XXX ± .010 .XX ± .030

scale N/A

material N/A

finish N/A

WAVETEK san diego, calif

by BOCHICHIO date 7-21-69 app'd

title ASS'Y, BRACKET

model no. 130-136

dwg no. 0102-00-0324

rev. K

this document contains proprietary information and design rights belonging to WAVETEK and may not be used or reproduced for any reason except calibration, operation and maintenance without written authorization.

REV	ECN	BY	DATE	APP

THIS DOCUMENT CONTAINS PROPRIETARY INFORMATION AND DESIGN RIGHTS BELONGING TO WAVETEK AND MAY NOT BE REPRODUCED FOR ANY REASON EXCEPT CALIBRATION, OPERATION, AND MAINTENANCE WITHOUT WRITTEN AUTHORIZATION.

REFERENCE DESIGNATORS	PART DESCRIPTION	ORIG-MFGR-PART-NO	MFGR	WAVETEK NO.	QTY/PT
NONE	ASSY DRWG, BRACKET	0102-00-0324	WVTK	0102-00-0324	1
11	TRANSFORMER	130-500	WVTK	1204-00-0478	1
3	BRKT	130-306	WVTK	1400-00-1093	1
15	HEAT SINK	130-311	WVTK	1400-00-1163	1
14	INSULATOR	740-307	WVTK	1400-00-4790	1
1	BRKT,REAR MOUNTING	1400-00-8813	WVTK	1400-00-8813	1
33	BNC CONN	KC-7946	KING	2100-01-0002	1
20	SOLDER LUG	1497	SMITH	2100-04-0012	1
21	SOLDER LUG	1485-6	SMITH	2100-04-0025	2
5	FUSE,250V,1/8A,SB	MDL 1/8	BUSMN	2400-05-0001	1
6	FUSE,125V,1/4A,SB	313.250	LITFU	2400-05-0008	1
7	FUSE HOLD	345001	LITFU	2400-05-0012	1
24	INSERT # 6	74-11-106-13	SOTCO	2800-09-0017	4
17	WASHER,SHOULDER	2668	SMITH	2800-27-0004	2
NONE	STRAIN RELIEF BUSH	SR6W-1	HEYCO	2800-37-0003	1
13	SWITCH ASSY SLIDE	46256-LF	SWCFT	5105-00-0002	1
12	SOLDER GUARD	46256-LF-SG	SWCFT	5105-09-0001	1
51	PWR CORD	0-7789-006-GY	PACRD	6001-80-0004	1

WAVETEK PARTS LIST	TITLE BRACKET ASSY	ASSEMBLY NO. 1101-00-0065 PAGE: 1	REV K

NOTE UNLESS OTHERWISE SPECIFIED

REMOVE ALL BURRS AND BREAK SHARP EDGES	DRAWN	DATE	WAVETEK SAN DIEGO • CALIFORNIA
MATERIAL	PROJ ENGR		TITLE BRACKET ASSY
	RELEASE APPROV		
FINISH WAVETEK PROCESS	TOLERANCE UNLESS OTHERWISE SPECIFIED .XXX ±.010 .XX ±.030 ANGLES ±1°		
	DO NOT SCALE DWG		MODEL NO. 132 / DWG NO. 1101-00-0065 / REV K
	SCALE		CODE IDENT 23338 / SHEET 1 OF 1

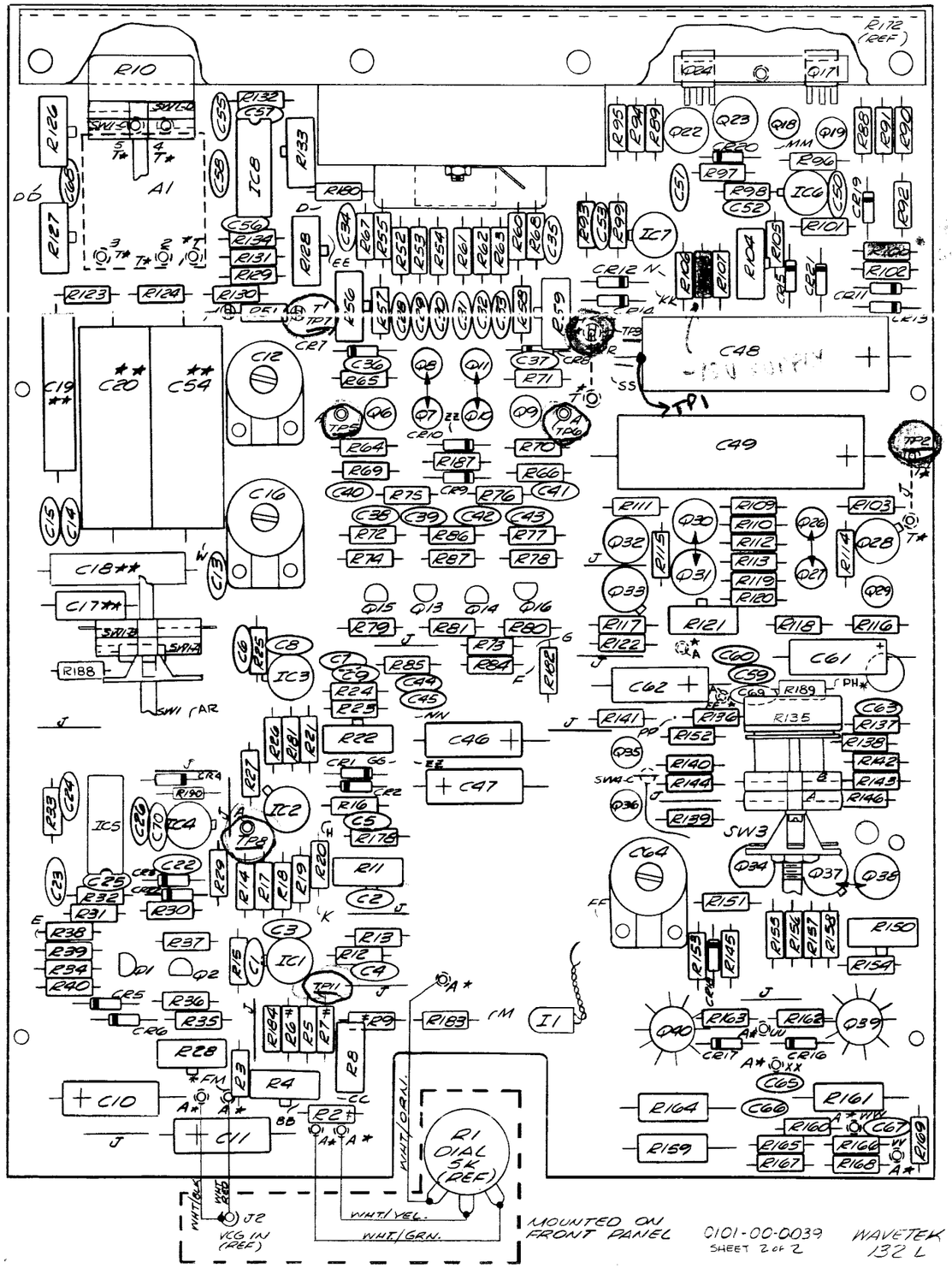

MOUNTED ON FRONT PANEL

0101-00-0039
SHEET 2 OF 2

WAVETEK
132 L

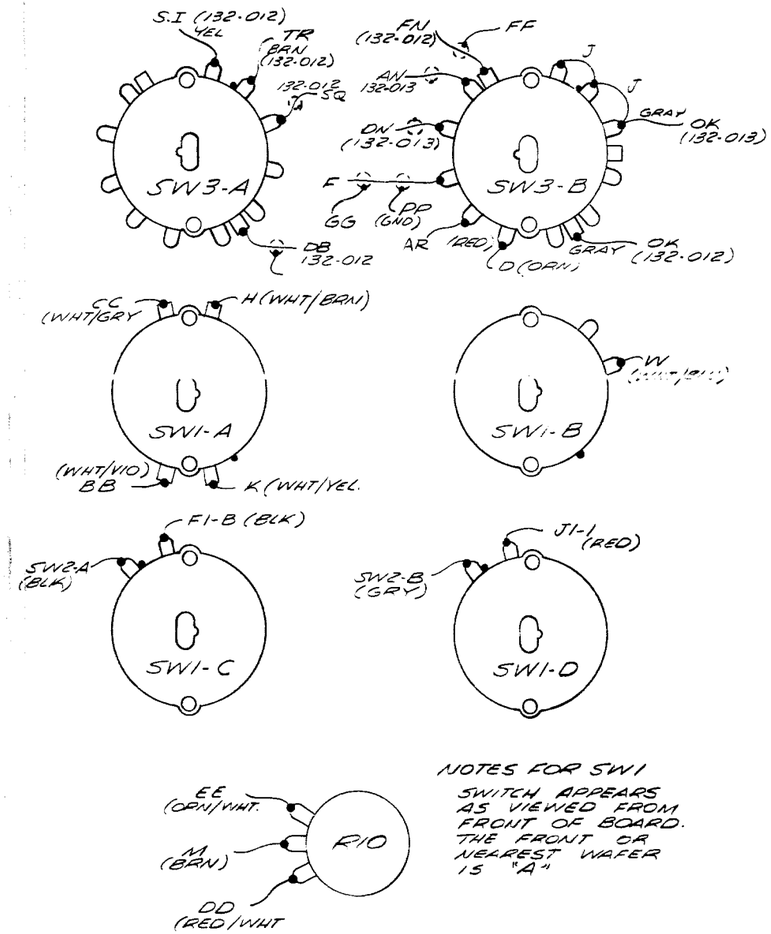

NOTES FOR SW1
SWITCH APPEARS AS VIEWED FROM FRONT OF BOARD. THE FRONT OR NEAREST WAFER IS "A"

8. ←→ = MATCHED TRANSISTORS
7. ★★ = MATCHED SET
6. # = SELECTED VALUE
5. PH, FM,* = FARSIDE
4. A = AMP PINS NEARSIDE
3. A* = AMP PINS FARSIDE
2. T*, T'* = TERMINALS FARSIDE
1. T' = TERMINALS NEARSIDE

NOTES

REVISIONS			
REV	DESCRIPTION	DATE	APPROVED

REV	ECN	BY	DATE	APP
L	ECN 1347	RO	10/7/75	R.
K	ECN 1291	RO	[illegible]	R.
J	ECN 1223	RO	3-19-75	R.
H	ECN 1216	[illegible]	2-25-75	R.
G	ECN 1181	RO	1-17-75	[illegible]
F	ECN 794	BA	6-18-74	RC
E	ECN 77[illegible]	BA	[illegible]	RC
D	ECN 726	BA	9-5-73	RC
C	ECN 635	[illegible]	[illegible]	RC
B	ECN 441	[illegible]	[illegible]	RC
A	ECN # 421	B.R.	4-2-72	R.C.

TOLERANCE UNLESS OTHERWISE SPEC
.XXX ± .010
.XX ± .030
ANGLES ± 0°30'

WAVETEK SAN DIEGO, CALIFORNIA

SCALE N/A | BY GRAY | DATE 2-14-72 | APP R. C.

MATERIAL N/A

TITLE ASSY MAIN BOARD

MODEL NO. 132 | DWG NO. SHT 1 OF 2 0101-00-0039 | REV L

FINISH N/A

THIS DOCUMENT CONTAINS PROPRIETARY INFORMATION AND DESIGN RIGHTS BELONGING TO WAVETEK AND MAY NOT BE REPRODUCED FOR ANY REASON EXCEPT CALIBRATION, OPERATION, AND MAINTENANCE WITHOUT WRITTEN AUTHORIZATION.

VCG

HYS/OUTPUT SWITCH

POWER SUPPLY

SW3B

OUTPUT AMPL

SINE CONV

DC OFFSET

SW4

FREQ VERNIER

VCG IN

SW1-A

SW1-C

SW1-D

SW2

T1

J1

J2

J3

FM

XIMHz

1MHz

CCW

CW

PH

FF

PP

FN

AN

ON

OFF

SYNC OUT

TP1 TP2 TP3 TP4 TP5 TP6 TP7 TP8 TP9 TP10 TP11

IC1 µA709C

IC2 LM318

IC3 µA709C

IC4 ADB11 or KLG150

IC5 CA3030

IC6 µA709C

IC7 µA709C

IC8 CA3030

Q1 2N3903

Q2 2N3905

Q6 2N3640

Q7 MATCH 2N3646 (2)

Q8 MATCH 2N3646 (2)

Q9 2N3646

Q10 (2) 2N3640 MATCH

Q11

Q13 2N2369

Q14 LOB

Q15 LOB

Q16 2N2369

Q17 TIP29

Q18 2N3646

Q19 2N3646

Q22 2N3638

Q23 2N3638

Q24 TIP30

Q27 MATCHED 2N3696 (2)

Q28 2N3299

Q29 2N3646

Q30

Q31 2N3638 MATCHED (2)

Q32 2N3638

Q33 2N2905

Q34a TD101

Q34b

Q35 2N3646

Q36 2N3646

Q37 2N2905

Q38 2N2905

Q39 2N2222 SA HEATSINK

Q40 2N2905A HEATSINK

CR1 CR2 CR3 CR4 CR5 CR6 CR7 CR8 CR9 CR10 CR11 SCE-1 CR12 SCE-1 CR13 SCE-1 CR14 SCE-1 CR15 CR16 CR17 CR18 CR19 CR20 CR21 CR22

FI 1/5A 250V-1/8A

SWITCH (SHOWN IN 115V POSITION)

115V-230V

BLK BLK/WHT GRY GRY/WHT

GND

+15V -15V +22V -22V +6V -6V

10V P-P

NOTES UNLESS OTHERWISE SPECIFIED

1. * INDICATES MATCHED SET (R14, R18, R19, R21, R181, R27) (R118; R119) (R109, R110) (R103, R111) (R106, R108)
2. DIODES ARE FDG666
3. RESISTORS ARE ±5% - A, 1/8W 1%
4. * C17, C18, C19, C20, C54 ARE A MATCHED SET
5. IC2: CA3039
6. IC2, & IC 5 ARE SELECTED.
7. # INDICATES SELECTED VALUE; NOMINAL VALUE AS SHOWN.

LAST REF DESIG.

A1	IC8
C70	R190
CR22	T1
I1	Q40

					C	ECN 1181	BC 6-6-74
					B	ECN 555	BA 6-26-73
					D	ECN 685	CA K 2-20-73 R.C.
J	ECN 1638	BC	11-9-73		C	ECN 641	BC 1-4-73 R.C.
H	ECN 1347	BC	10-7-73	R.C.	B	ECN 441	SK 6-25-72 R.C.
G	ECN 12.6 A	[illegible]			A	ECN 421	BR 4-21-72 R.C.

	rev	ecn	by	date	app.
tolerance unless otherwise specified .XXX ± .010 .XX ± .030		WAVETEK san diego, calif.			
scale N/A	by GRAY	date 2-8-72	app. R.C.		
material N/A	title SCHEMATIC MAIN BOARD				
finish N/A	model no. 132	dwg no. 0103-00-0039	rev J		

This document contains proprietary information and design rights belonging to WAVETEK and may not be used or reproduced for any reason except calibration, operation and maintenance without written authorization.

µA709C: FREQ COMP (INPUT), +Vcc, OUTPUT, INPUT, FREQ COMP (OUTPUT), -Vcc

CA3030: FREQ COMP, GND, INPUT, -V, FREQ COMP, +V, OUTPUT, FREQ COMP

AD 811 OR KLG 150

CA3039: PIN IC CONNECTED TO BASE

A1 (WAVETEK 130-011): -V, INPUT, GND, +V, OUTPUT

THIS DOCUMENT CONTAINS PROPRIETARY INFORMATION AND DESIGN RIGHTS BELONGING TO WAVETEK AND MAY NOT BE REPRODUCED FOR ANY REASON EXCEPT CALIBRATION, OPERATION, AND MAINTENANCE WITHOUT WRITTEN AUTHORIZATION.

REV	ECN	BY	DATE	APP

REFERENCE DESIGNATORS	PART DESCRIPTION	ORIG-MFGR-PART-NO	MFGR	WAVETEK NO.	QTY/PT
NONE	ASSY DWG, MAIN	0101-00-0039	WVTK	0101-00-0039	1
NONE	SCHEMATIC, MAIN	0103-00-0039	WVTK	0103-00-0039	1
A1	SINE MOD	130-011	WVTK	1200-00-0001	1
NONE	BLOCK,MOUNTING	130-305	WVTK	1400-00-1083	2
101	BLOCK,SUPPORT	130-328	WVTK	1400-00-1283	1
C05 C22	CAP,CER,10PF,1KV	00-100	CRL	1500-01-0011	2
C70	CAP,CER,100PF,1KV	00-101	CRL	1500-01-0111	1
C65 C66	CAP,CER,.01MF,50V	CK-103	CRL	1500-01-0310	2
C4 C25 C26 C44 C45 C36 C37 C4 C44 C45 C57 C58 C59 C60 C7 C9	CAP,CER,.1MF,20V	UK20-104	ANCO	1500-01-0413	16
C67 C68	CAP,CER,150PF,1KV	00-151	CRL	1500-01-5111	2
C23 C24 C35	CAP,CER,220PF,1KV	00-220	CRL	1500-02-2011	3
C08 C3 C30 C31	CAP,CER,220PF,1KV	00-221	CRL	1500-02-2111	4
C56	CAP,CER,300PF,1KV	00-300	CRL	1500-03-0001	1
C36 C43	CAP,CER,330PF,1KV	00-330	CRL	1500-03-3011	2
C65	CAP,CER,330PF,1KV	00-331	CRL	1500-03-3111	1
C39 C42 C69	CAP,CER,470PF,1KV	00-470	CRL	1500-04-7011	3
C01 C06 C52 C55	CAP,CER,.005MF,50V	CK-502	CRL	1500-05-0210	4

WAVETEK PARTS LIST | TITLE MAIN | ASSEMBLY NO. 1100-00-0039 PAGE: 1 | REV L

REFERENCE DESIGNATORS	PART DESCRIPTION	ORIG-MFGR-PART-NO	MFGR	WAVETEK NO.	QTY/PT
	CAP,SET,POLYC CONSIST:1509-90-0001 THRU:0004			1509-80-0005	
C19	CAP,POLYC,1MF,100V PART OF 1509-80-0005 QTY:01:1500-41-0504				
C20 C54	CAP,POLYC,5MF,100V PART OF 1509-80-0005 QTY:02:1500-45-0504				
NONE	MAIN	130-110	AVTK	1700-00-0037	1
152	TERM	2000M1	USECO	2100-05-0009	6
151	TERM	2010E1	USECO	2100-05-0011	5
153	PIN,MALE	61182-2	AMP	2100-05-0020	12
NONE	KNOB	020-222	ELMA	2400-01-0001	1
11	LAMP	CM7-7876	CHMIN	2400-02-0013	1
148	HEAT SINK	WF-207	WAKE	2800-11-0001	2
149	TRANSIPAD	10123N	METHS	2800-11-0003	9
150	TRANSIPAD	10160	METRS	2800-11-0004	2
R56 R59	POT,TRIM,100	91AR100	BECK	4600-01-0103	2
R104	POT,TRIM,1K	91AR1K	BECK	4600-01-0209	1
R10	POT,CONT,10K	130-41A	AVTK	4600-01-0305	1

WAVETEK PARTS LIST | TITLE MAIN | ASSEMBLY NO. 1100-00-0039 PAGE: 3 | REV L

REFERENCE DESIGNATORS	PART DESCRIPTION	ORIG-MFGR-PART-NO	MFGR	WAVETEK NO.	QTY/PT
R086 R087 R155 R156 R157 R158	RES,MF,1/8W,1%,10	RN55D-10R0F	TRW	4701-03-1009	6
R85	RES,MF,1/8W,1%,124	RN55D-1240F	TRW	4701-03-1240	1
R141	RES,MF,1/8W,1%,140	RN55D-1400F	TRW	4701-03-1400	1
R124	RES,MF,1/8W,1%,150	RN55D-1500F	TRW	4701-03-1500	1
R15 R25 R98 R99	RES,MF,1/8W,1%,1.5K	RN55D-1501F	TRW	4701-03-1501	4
R5	RES,MF,1/8W,1%,15K	RN55D-1502F	TRW	4701-03-1502	1
R145 R153	RES,MF,1/8W,1%,1.78K	RN55D-1781F	TRW	4701-03-1781	2
R114 R115	RES,MF,1/8W,1%,18.2K	RN55D-1822F	TRW	4701-03-1822	2
R139 R140 R166	RES,MF,1/8W,1%,21.5	RN55D-21R5F	TRW	4701-03-2159	3
R034 R035 R180 R36	RES,MF,1/8W,1%,2.21K	RN55D-2211F	TRW	4701-03-2211	4
R44 R184	RES,MF,1/8W,1%,2.32K	RN55D-2321F	TRW	4701-03-2321	2
R053 R074 R078 R151 R32	RES,MF,1/8W,1%,249	RN55D-2490F	TRW	4701-03-2490	5
R31 R54 R61	RES,MF,1/8W,1%,27.4K	RN55D-2742F	TRW	4701-03-2742	3
R024 R073 R100 R112 R113	RES,MF,1/8W,1%,2.87K	RN55D-2871F	TRW	4701-03-2871	5
R64 R70	RES,MF,1/8W,1%,3.01K	RN55D-3011F	TRW	4701-03-3011	2
R084 R137 R142	RES,MF,1/8W,1%,316	RN55D-3160F	TRW	4701-03-3160	3

WAVETEK PARTS LIST | TITLE MAIN | ASSEMBLY NO. 1100-00-0039 PAGE: 5 | REV L

REFERENCE DESIGNATORS	PART DESCRIPTION	ORIG-MFGR-PART-NO	MFGR	WAVETEK NO.	QTY/PT
C40 C41	CAP,CER,.68PF,1KV	00-681	CRL	1500-06-R111	2
C28 C33	CAP,MICA,150PF,500V	CM15-151J	RMCO	1500-11-0100	2
C29 C32	CAP,MICA,300PF,500V	CM15-301J	RMCO	1500-13-0100	2
C141	CAP,MICA,560PF,500V	CM15-561J	RMCO	1500-15-0000	1
C30 C31	CAP,MICA,560PF,500V	CM15-561J	RMCO	1500-15-0100	2
C15	CAP,MICA,680PF,500V	CM15-681J	RMCO	1500-16-0000	1
C17	CAP,MICA,910PF,500V	CM15-911F	RMCO	1500-19-1101	1
C10 C11 C46 C47 C61 C62	CAP,ELECT,1000MF,16V	5WX01076015DC7	SPRAG	1500-31-0101	6
C48 C49	CAP,ELECT,1000MF,35V	36D108G035DL6	SPRAG	1500-31-0212	2
C12 C16 C64	VAR1,4.5-65PF,50V	5C8-001-E9A	ERIE	1500-32-0000	3
	CAP,SET,POLYC CONSIST:1509-90-0001 THRU:0004	130-311-5	AVTK	1509-80-0005	1
C17	CAP,POLYC,.01MF,100V PART OF 1509-80-0005 QTY:01:1500-41-0304				
C18	CAP,POLYC,.1MF,100V PART OF 1509-80-0005 QTY:01:1500-41-0404				

WAVETEK PARTS LIST | TITLE MAIN | ASSEMBLY NO. 1100-00-0039 PAGE: 2 | REV L

REFERENCE DESIGNATORS	PART DESCRIPTION	ORIG-MFGR-PART-NO	MFGR	WAVETEK NO.	QTY/PT
R172	POT,SWITCH,10K	7(A)6036M10504	BH	4600-01-0311	1
R008 R011 R022 R026 R126 R150	POT,TRIM,100	91A100R	BECK	4600-01-0402	6
R126 R127	POT,TRIM,200	91AR200	BECK	4600-02-0101	2
R004 R121 R133	POT,TRIM,500	91AR500	BECK	4600-03-0104	3
R38 R39	RES,C,1/2W,5%,47	RC20GF-470	STKPL	4700-25-0479	2
R90 R95	RES,C,1/2W,5%,5.6	RC20GF-5R6	STKPL	4700-25-0569	2
R102 R103	RES,C,1/2W,5%,6.2	RC20GF-6R2	STKPL	4700-25-0629	2
R07 R23	RES,C,1/2W,5%,3.9K	RC20GF-395	STKPL	4700-25-3909	2
R12	RES,C,1/2W,10%,4.7K	RC20GF-475	STKPL	4700-25-4709	1
R145	RES,C,1/2W,10%,560K	RC20GF-564	STKPL	4700-25-5603	1
R184	RES,C,1/2W,10%,6.8M	RC20GF-685	STKPL	4700-25-6805	1
R29	RES,C,1/2W,10%,8204	RC20GF-824	STKPL	4700-25-8203	1
R161 R164	RES,C,2W,5%,47	RC42GF-470	STKPL	4700-45-0470	2
R057 R058 R079 R080 R189	RES,MF,1/8W,1%,100	RN55D-1000F	TRW	4701-03-1000	5
R030 R075 R076 R130 R160	RES,MF,1/8W,1%,1K	RN55D-1001F	TRW	4701-03-1001	5
R178	RES,MF,1/8W,1%,10K	RN55D-1002F	TRW	4701-03-1002	1

WAVETEK PARTS LIST | TITLE MAIN | ASSEMBLY NO. 1100-00-0039 PAGE: 4 | REV L

REFERENCE DESIGNATORS	PART DESCRIPTION	ORIG-MFGR-PART-NO	MFGR	WAVETEK NO.	QTY/PT
R187	RES,MF,1/8W,1%,33.2	RN55D-33R2F	TRW	4701-03-3322	1
R120 R122	RES,MF,1/8W,1%,3.83K	RN55D-3831F	TRW	4701-03-3831	2
R52 R63	RES,MF,1/8W,1%,392	RN55D-3920F	TRW	4701-03-3920	2
R013 R101	RES,MF,1/8W,1%,3.92K	RN55D-3921F	TRW	4701-03-3921	2
R65 R71 R91 R94	RES,MF,1/8W,1%,464	RN55D-4640F	TRW	4701-03-4640	4
R002 R017 R026 R037 R040 R109	RES,MF,1.8W,1%,46.4	RN55D-46R4F	TRW	4701-03-4649	6
R066 R067 R088 R094 R092 R093 R096 R097 R107	RES,MF,1/8W,1%,4.75K	RN55D-4751F	TRW	4701-03-4751	9
R55 R60	RES,MF,1/8,1%,499	RN55D-4990F	TRW	4701-03-4990	2
R003 R144 R190	RES,MF,1/8W,1%,4.99K	RN55D-4991F	TRW	4701-03-4991	3
R138	RES,MF,1/8W,1%,5.62	RN55D-5R62F	TRW	4701-03-5629	1
R132 R134	RES,MF,1/8W,1%,576	RN55D-5760F	TRW	4701-03-5760	2
R033 R062 R105	RES,MF,1/8W,1%,6.19K	RN55D-6191F	TRW	4701-03-6191	3
R16	RES,MF,1/8W,1%,681	RN55D-6810F	TRW	4701-03-6810	1
R67 R68	RES,MF,1/8W,1%,6.98K	RN55D-6981F	TRW	4701-03-6981	2
R182	RES,MF,1/8W,1%,750	RN55D-7500F	TRW	4701-03-7500	1
R102 R131	RES,MF,1/8W,1%,8.25K	RN55D-8251F	TRW	4701-03-8251	2

WAVETEK PARTS LIST | TITLE MAIN | ASSEMBLY NO. 1100-00-0039 PAGE: 6 | REV L

NOTE: UNLESS OTHERWISE SPECIFIED

REMOVE ALL BURRS AND BREAK SHARP EDGES	DRAWN	DATE	WAVETEK SAN DIEGO • CALIFORNIA
MATERIAL	PROJ ENGR		TITLE: MAIN BOARD
	RELEASE APPROV		
FINISH WAVETEK PROCESS	TOLERANCE UNLESS OTHERWISE SPECIFIED XXX ±.010 ANGLES ±1 XX ±.030		MODEL NO. 132 / DWG NO. 1100-00-0039 / REV L
	DO NOT SCALE DWG		CODE IDENT 23338 / SHEET 1 OF 2
	SCALE		

THIS DOCUMENT CONTAINS PROPRIETARY INFORMATION AND DESIGN RIGHTS BELONGING TO WAVETEK AND MAY NOT BE REPRODUCED FOR ANY REASON EXCEPT CALIBRATION, OPERATION, AND MAINTENANCE WITHOUT WRITTEN AUTHORIZATION.

REV	ECN	BY	DATE	APP

REFERENCE DESIGNATORS	PART DESCRIPTION	CM1G-MFGR-PART-NO	MFGR	WAVETEK NO.	QTY/PT
R081 R123 R136	RES,MF,1/8W,1%,82.5	RN55D-82R5F	TRW	4701-03-8259	3
R152	RES,MF,1/8W,1%,8.87K	RN55D-8871F	TRW	4701-03-8871	1
R72 R77	RES,MF,1/8W,1%,909	RN55D-9090F	TRW	4701-03-9090	2
R20	RES,MF,1/8W,1%,90.9K	RN55D-9092F	TRW	4701-03-9092	1
R009 R129	RES,MF,1/4W,1%,1M	RN60D-1004F	TRW	4701-13-1004	2
R116 R117	RES,MF,1/4W,1%,332	RN60D-3320F	TRW	4701-13-3320	2
R154	RES,MF,1/4W,1%,40.2	RN60D-40R2F	TRW	4701-13-4029	1
R051 R165 R166 R167 R168	RES,MF,1/4W,1%,49.9	RN60D-49R9F	TRW	4701-13-4999	5
R183	RES,MF,1/4W,1%,6.19K	RN60D-6193F	TRW	4701-13-6193	1
R159	RES,MF,1W,1%,681	RM700-6810F	TRW	4701-33-6810	1
R109 R110	RES,SET,2-2.49K,1/8W QTY:2:4701-03-2491	130-501-1	AVTK	4769-00-0010	1
R115 R114	RES,SET,2-4.02K,1/8W QTY:2:4701-03-4021	130-501-2	AVTK	4769-00-0014	1
R014 R015 R019 R021 R027 R181	RES,SET,6-6.19K,1/8W QTY:6:4701-03-6191	130-501-3	AVTK	4784-00-0015	1
R105 R106 R108 R111	RES,SET,4-10K,1/8W QTY:4:4701-03-1002	130-501-4	AVTK	4784-00-0017	1
CR19 CR21 RL20	DIODE	1N4581	MICRO	4801-01-4581	3

WAVETEK PARTS LIST	TITLE MAIN	ASSEMBLY NO. 1100-00-0039 PAGE: 7	REV L

REFERENCE DESIGNATORS	PART DESCRIPTION	CM1G-MFGR-PART-NO	MFGR	WAVETEK NO.	QTY/PT
Q30 Q31	TRANS,M/PR,2N3636 QTY:2:4901-03-3636	130-501-9	AVTK	4998-00-0012	1
Q10 Q11	TRANS,M/PR,2N3640 QTY:2:4901-03-6400	130-501-10	AVTK	4998-00-0013	1
Q07 Q08 Q26 Q27	TRANS,M/PR,2N3646 QTY:2:4901-03-6460	130-501-11	AVTK	4998-00-0014	2
SW3	SWITCH ASSY ROTARY	132-SW1	AVTK	5104-00-0013	1
SW1A	WAFER	T-106	CTS	5104-02-0002	1
SW1C SW1D	WAFER	130-SW1-3	AVTK	5104-02-0007	2
SW1B	WAFER	133-SW1-1	AVTK	5104-02-0008	1
NONE	SWITCH STOP	212-33-006	CTS	5104-07-0002	1
SW1	DETENT MOD FROM:5104-01-0010	5104-94-0045	AVTK	5104-94-0045	1
IC4	IC	AD 611	ANDEV	7000-06-1100	1
IC5	IC,CLASS I,CA-3030 QTY:1:7000-30-3000	130-501-15	AVTK	7200-00-0001	1
IC6	IC,CLASS II,CA-3030 QTY:1:7000-30-3000	130-501-16	AVTK	7200-00-0002	1
IC2	IC,CLASS I,CA-3039 QTY:1:7000-30-3900	130-501-18	AVTK	7200-00-0004	1
IC1 IC3	IC,CLASS I,MA-709 QTY:1:7000-07-0900	130-501-13	AVTK	7200-00-0005	2

WAVETEK PARTS LIST	TITLE MAIN	ASSEMBLY NO. 1100-00-0039 PAGE: 9	REV L

REFERENCE DESIGNATORS	PART DESCRIPTION	CM1G-MFGR-PART-NO	MFGR	WAVETEK NO.	QTY/PT
CR11 CR12 CR13 CR14	DIODE	SCE-1	SEMTC	4801-02-0001	4
CR01 CR02 CR03 CR04 CR05 CR06 CR07 CR08 CR09 CR10 CR15 CR16 CR17 CR18 CR22	DIODE	FD-6666	FAIR	4807-02-6666	15
Q39	TRANS	2N2219A	FAIR	4901-02-2191	1
Q33 Q40	TRANS	2N2905A	FAIR	4901-02-9051	2
Q28	TRANS	2N3299	FAIR	4901-03-2990	1
Q22 Q23 Q32	TRANS	2N3638	FAIR	4901-03-6380	3
Q6	TRANS	2N3640	FAIR	4901-03-6400	1
Q18 Q19 Q24 Q35 Q36 Q9	TRANS	2N3646	FAIR	4901-03-6460	6
Q1	TRANS	2N3903	FAIR	4901-03-9030	1
Q5	TRANS	2N3905	FAIR	4901-03-9050	1
Q13 Q15	TRANS	MPS-L06	FAIR	4902-00-0080	2
Q17	TRANS	TIP-29	TI	4902-00-0290	1
Q24	TRANS	TIP-30	TI	4902-00-0300	1
Q34	TRANS	TO-101	TI	4902-00-1010	1
Q12 Q16	TRANS	VPS-2369	FAIR	4902-02-3690	2
Q37 Q38	TRANS,M/PR,2N4903A QTY:2:4901-02-4051	130-501-8	AVTK	4998-00-0011	1

WAVETEK PARTS LIST	TITLE MAIN	ASSEMBLY NO. 1100-00-0039 PAGE: 8	REV L

REFERENCE DESIGNATORS	PART DESCRIPTION	CM1G-MFGR-PART-NO	MFGR	WAVETEK NO.	QTY/PT
IC8 IC7	IC,CLASS II,MA-709 QTY:1:7000-07-0900	130-501-14	AVTK	7200-00-0006	2

WAVETEK PARTS LIST	TITLE MAIN	ASSEMBLY NO. 1100-00-0039 PAGE: 10	REV L

NOTE UNLESS OTHERWISE SPECIFIED

REMOVE ALL BURRS AND BREAK SHARP EDGES	DRAWN	DATE	WAVETEK SAN DIEGO • CALIFORNIA
MATERIAL	PROJ ENGR		TITLE MAIN BOARD
FINISH WAVETEK PROCESS	RELEASE APPROV		
	TOLERANCE UNLESS OTHERWISE SPECIFIED XXX ±.010 ANGLES ±1 XX ±.030		
	DO NOT SCALE DWG		MODEL NO. 132 / DWG NO. 1100-00-0039 / REV L
	SCALE		CODE IDENT 23338 / SHEET 2 OF 2

REVISIONS			
REV	DESCRIPTION	DATE	APPROVED

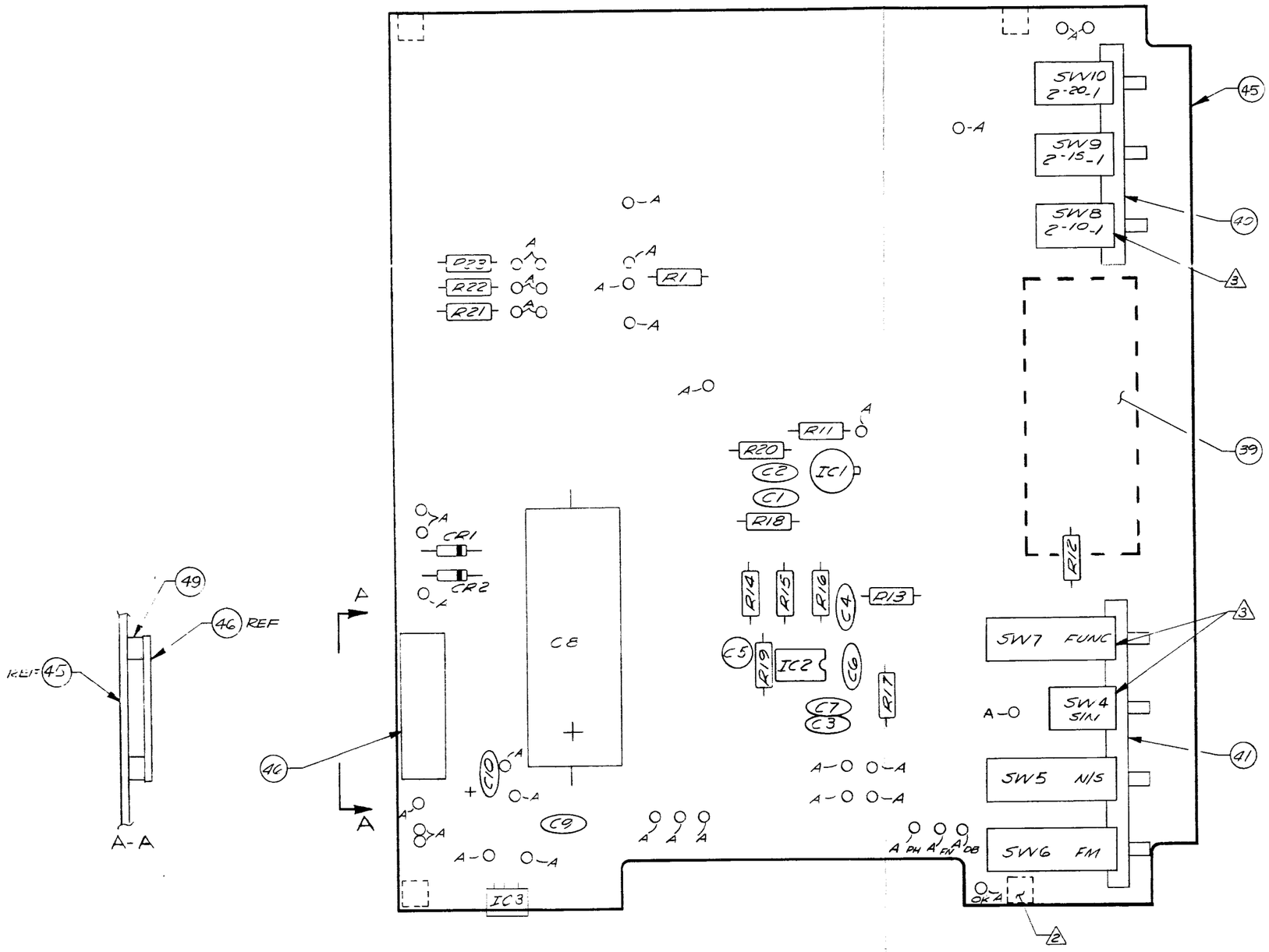

3. CUT P.C. PINS OFF NEAR COMPONENT BODY (TOP SIDE) ON SWITCHES SW4, SW7 & SW8

2. USECO BLOCK, SWAGE IN BOARD (FARSIDE), 1. A = INSERT AMP PINS (NEARSIDE)

NOTES:

REV	ECN	BY	DATE	APP
F	ECN 1550	RD	6-9-72	
E	ECN 1229	RD	3-20-72	
D	ECN 771	BA	10-26-71	R.C.
C	ECN 491	SLW	6/30/71	R.C.
B	ECN # 422	B.Z.	4-21-72	R.C.

TOLERANCE UNLESS OTHERWISE SPEC
.XXX ± .010
.XX ± .030
ANGLES ± 0°30'

WAVETEK SAN DIEGO, CALIFORNIA

SCALE N/A | BY GRAY | DATE 2-14-72 | APP R. C.

MATERIAL N/A

TITLE ASSY, AMP BOARD

MODEL NO. 132 | DWG NO. SHT 1 OF 2 0101-00-0040 | REV F

FINISH N/A

THIS DOCUMENT CONTAINS PROPRIETARY INFORMATION AND DESIGN RIGHTS BELONGING TO WAVETEK AND MAY NOT BE REPRODUCED FOR ANY REASON EXCEPT CALIBRATION, OPERATION, AND MAINTENANCE WITHOUT WRITTEN AUTHORIZATION.

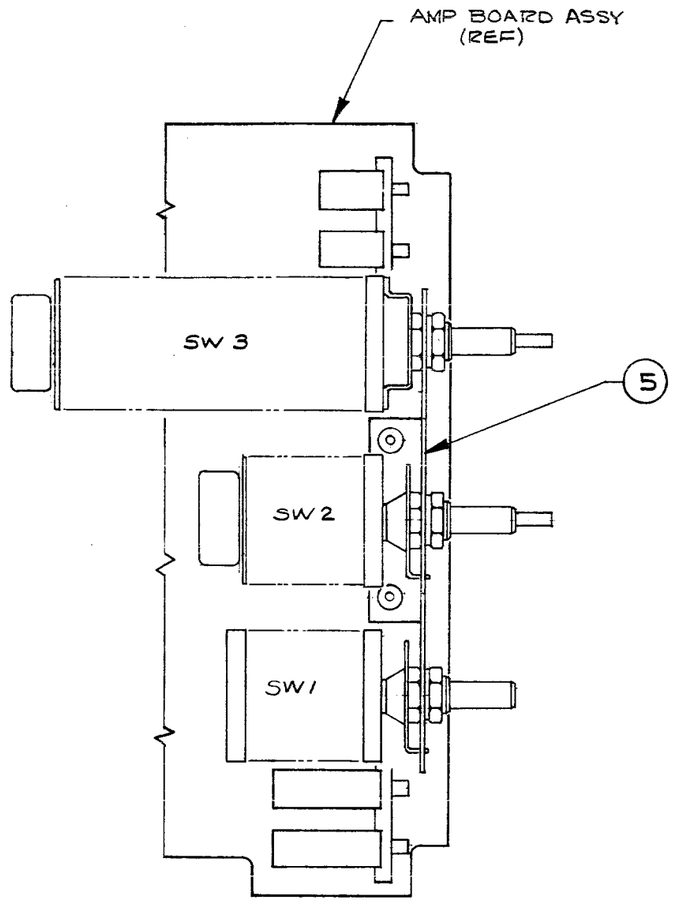

SWITCH INSTALLATION
(SW1, SW2, SW3)

SEE SHEET 1

FULL	B. REDMAN	2-15-72	R. C.
N/A	SWITCH BRACKET, SUB-ASSY AMP BOARD		
N/A	132	0101-00-0040 SHT 2 of 2	F

REVISIONS			
REV	DESCRIPTION	DATE	APPROVED

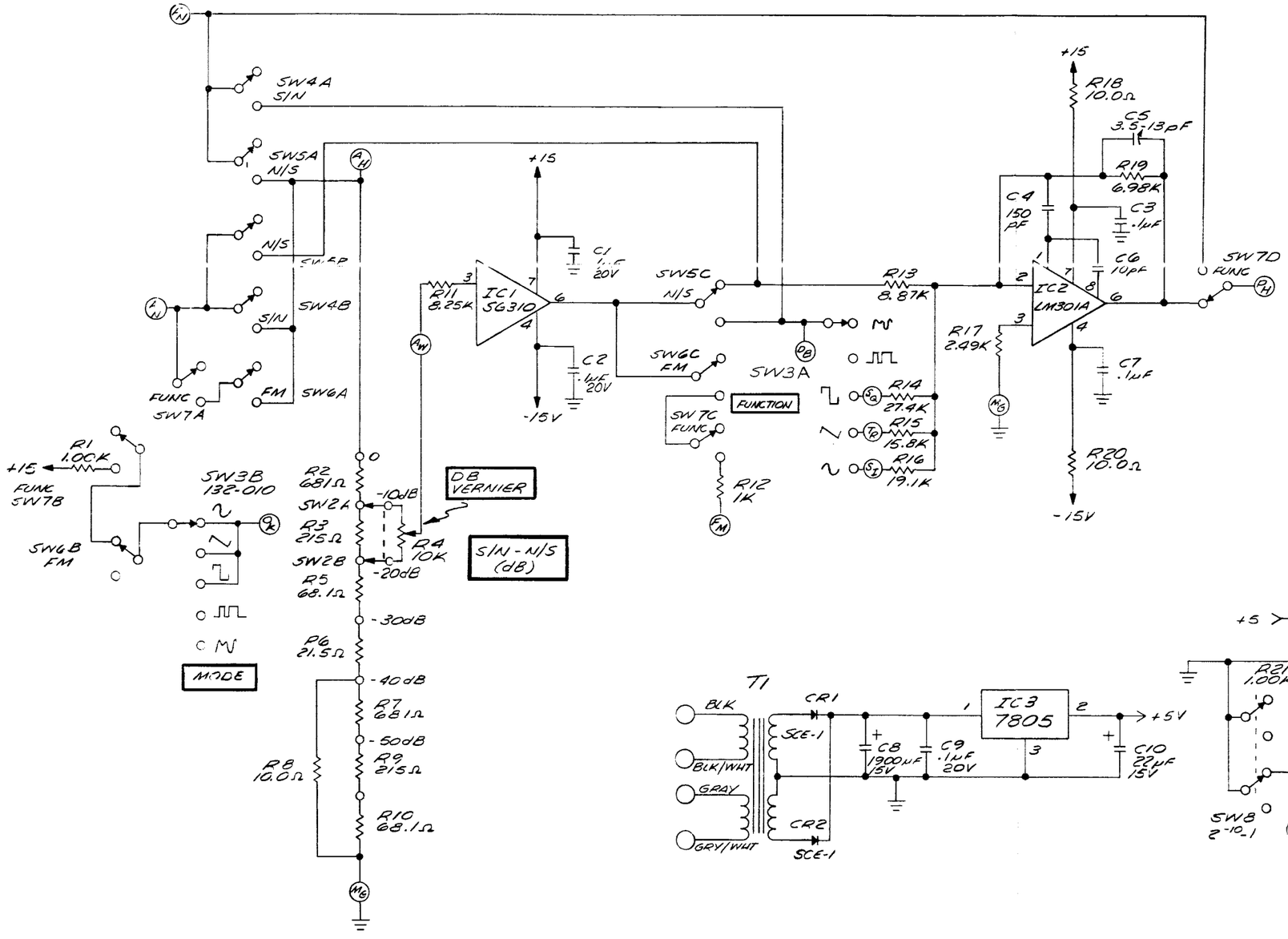

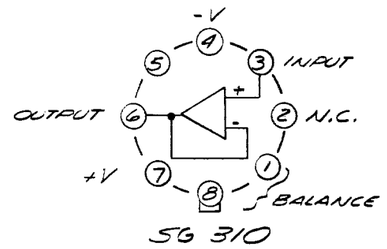

SG 310

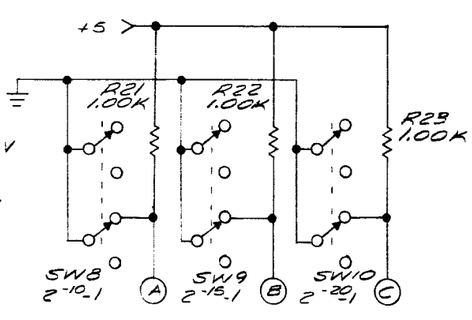

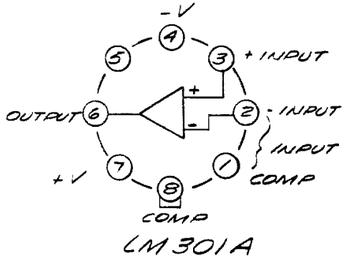

LM 301A

5. ALL PUSHBUTTON SWITCHES SHOWN IN "OUT" POSITION
4. ALL RESISTORS ARE METAL FILM, 1/8 W, 1%
3. ATTENUATOR RESISTORS MOUNTED ON SWITCH
2. FM PUSH ON, PUSH OFF
1. FUN, S/N, N/S INTERLOCKING PUSHBUTTON SWITCHES

NOTES: UNLESS OTHERWISE SPECIFIED

LAST REF DESIG

C10	R23
CR2	T1
IC3	SW10

REV	ECN	BY	DATE	APP
B	#771	BA	10-26-71	R.C.
A	#425	B.R.	4-7-71	R.C.

TOLERANCE UNLESS OTHERWISE SPEC
.XXX ± .010
.XX ± .030
ANGLES ± 0°30'

WAVETEK SAN DIEGO, CALIFORNIA

SCALE —

BY GRAY DATE 12-15-71 APP R.C.

MATERIAL —

TITLE SCHEMATIC, AMP BOARD

FINISH —

MODEL NO. 132 DWG NO. 0103-00-0040 REV B

THIS DOCUMENT CONTAINS PROPRIETARY INFORMATION AND DESIGN RIGHTS BELONGING TO WAVETEK AND MAY NOT BE REPRODUCED FOR ANY REASON EXCEPT CALIBRATION, OPERATION, AND MAINTENANCE WITHOUT WRITTEN AUTHORIZATION.

THIS DOCUMENT CONTAINS PROPRIETARY INFORMATION AND DESIGN RIGHTS BELONGING TO WAVETEK AND MAY NOT BE REPRODUCED FOR ANY REASON EXCEPT CALIBRATION, OPERATION, AND MAINTENANCE WITHOUT WRITTEN AUTHORIZATION.

REV	ECN	BY	DATE	APP

REFERENCE DESIGNATORS	PART DESCRIPTION	ORIG-MFGR-PART-NO	MFGR	WAVETEK NO.	QTY/PT
NONE	ASSY DRWG,AMP	0101-00-0040	WVTK	0101-00-0040	1
NONE	SCHEMATIC, AMP	0103-00-0040	WVTK	0103-00-0040	1
SW2	ATTEN SW ASSY	132-001	WVTK	1202-00-0003	1
SW3	FREQ SW ASSY	132-002	WVTK	1202-00-0004	1
SW1	ATTEN SW ASSY	142-003	WVTK	1202-00-0008	1
49	SPACER	8486	WVTK	1400-00-0653	2
39	BRKT	132-309	WVTK	1400-00-1653	1
C6	CAP,CER,10PF,1KV	DD-100	CRL	1500-01-0011	1
C1 C2 C3 C7 C9	CAP,CER,.1MF,20V	UK20-104	AMCO	1500-01-0413	5
C4	CAP,CER,150PF,1KV	DD-151	CRL	1500-01-5111	1
C8	CAP,ELECT,1900MF,15V	39D19860I5GL4	SPRAG	1500-51-9201	1
C5	VAR1,3.5-13PF,250V	7S-TM1K0-02 3.5/13PF	TMIKO	1500-51-3000	1
C10	CAP,TANT,22MF,15V	196D226X9015KA1	SPRAG	1500-72-2601	1
45	AMP	132-112	WVTK	1700-00-0040	1
46	TERMINAL	135-113	WVTK	1700-00-0188	1
50	PIN,MALE	61182-2	AMP	2100-05-0020	37
51	INSERT # 6	74-11-106-13	SUTCO	2800-09-0017	2
38	FAST,CHASSIS	1591-B11	USECO	2800-09-0021	4

WAVETEK PARTS LIST	TITLE AMPLIFIER	ASSEMBLY NO. 1100-00-0040	REV F
		PAGE: 1	

REFERENCE DESIGNATORS	PART DESCRIPTION	ORIG-MFGR-PART-NO	MFGR	WAVETEK NO.	QTY/PT
R11 R12 R21 R22 R23	RES,MF,1/8W,1%,1K	RN55D-1001F	TRW	4701-03-1001	5
R18 R20	RES,MF,1/8W,1%,10	RN55D-10R0F	TRW	4701-03-1009	2
R15	RES,MF,1/8W,1%,15.8K	RN55D-1582F	TRW	4701-03-1582	1
R16	RES,MF,1/8W,1%,19.1K	RN55D-1912F	TRW	4701-03-1912	1
R17	RES,MF,1/8W,1%,2.49K	RN55D-2491F	TRW	4701-03-2491	1
R14	RES,MF,1/8W,1%,27.4K	RN55D-2742F	TRW	4701-03-2742	1
R19	RES,MF,1/8W,1%,6.98K	RN55D-6981F	TRW	4701-03-6981	1
R11	RES,MF,1/8W,1%,8.25K	RN55D-8251F	TRW	4701-03-8251	1
R13	RES,MF,1/8W,1%,8.87K	RN55D-8871F	TRW	4701-03-8871	1
CR1 CR2	DIODE	SCE-1	SEMTC	4801-02-0001	2
41	SWITCH ASSY PB	132-400	WVTK	5103-00-0004	1
40	SWITCH ASSY PB	132-401	WVTK	5103-00-0005	1
52	BUTTON	J-52505-BLACK	CRL	5103-04-0003	7
IC2	IC	LM 301AN	NSC	7000-03-0100	1
IC1	IC	7000-03-1000	WVTK	7000-03-1000	1
IC3	VOLTAGE REGULATOR	7805393	FAIR	8000-78-0500	1

WAVETEK PARTS LIST	TITLE AMPLIFIER	ASSEMBLY NO. 1100-00-0040	REV F
		PAGE: 2	

B
R
O

NOTE UNLESS OTHERWISE SPECIFIED

REMOVE ALL BURRS AND BREAK SHARP EDGES	DRAWN	DATE	WAVETEK SAN DIEGO • CALIFORNIA
MATERIAL	PROJ ENGR		TITLE AMPLIFIER
	RELEASE APPRO.		
FINISH WAVETEK PROCESS	TOLERANCE UNLESS OTHERWISE SPECIFIED .XXX ±.010 ANGLES ±1° XX ±.030		MODEL NO. 132 / DWG NO. 1100-00-0040 / REV F
	DO NOT SCALE DWG		CODE IDENT 23338 / SHEET OF
	SCALE		

REVISIONS			
REV	DESCRIPTION	DATE	APPROVED

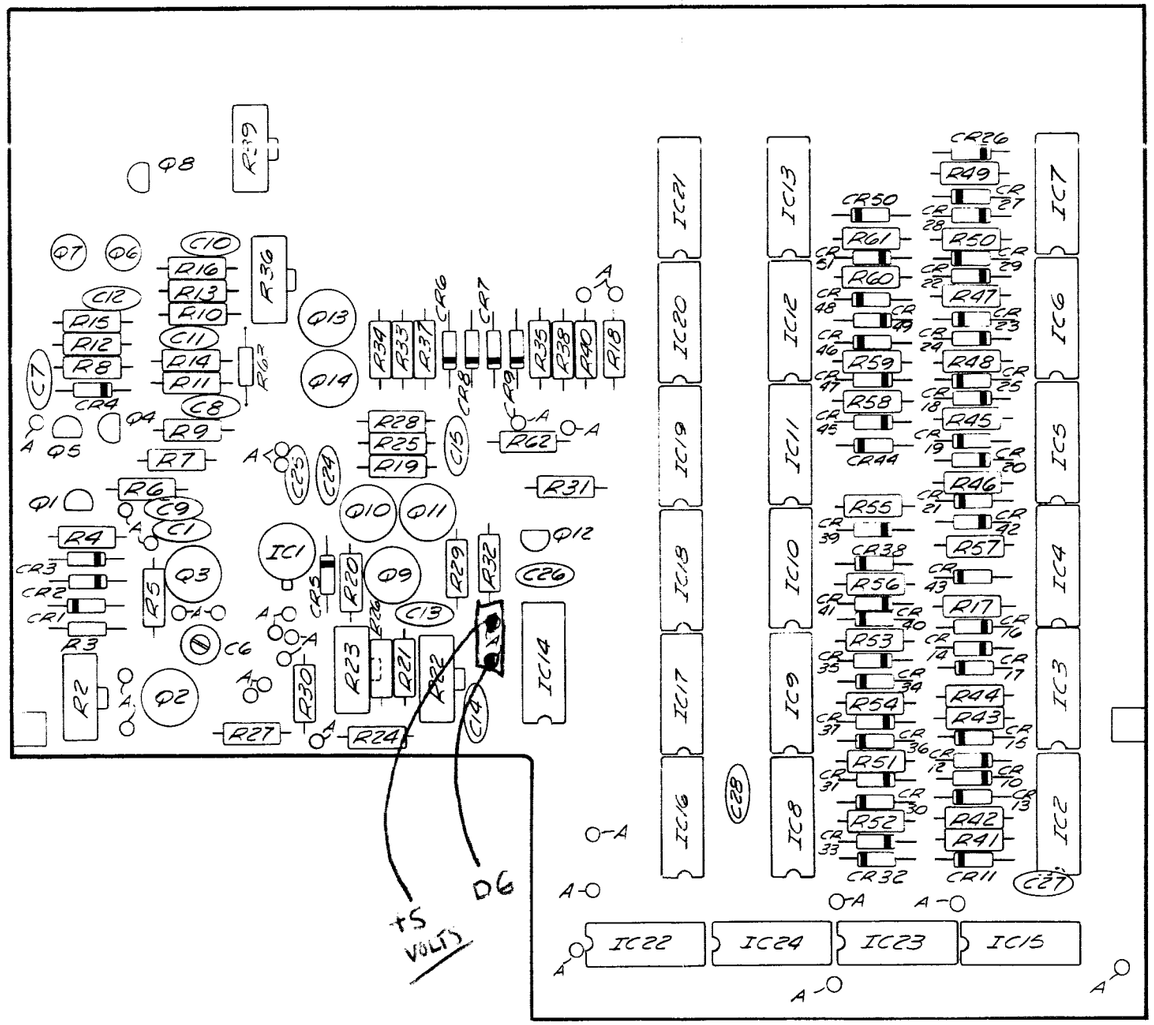

2. USECO BLOCK, SWAGE IN BOARD (NEARSIDE)
1. A = INSERT AMP PINS (NEARSIDE)

NOTES:

REV	ECN	BY	DATE	APP
C	#24	EC 327	12-[illegible]	
B	#25	B.R. 4/3/72		

TOLERANCE UNLESS OTHERWISE SPEC
.XXX ± .010
.XX ± .030
ANGLES ± 0°30'

WAVETEK SAN DIEGO, CALIFORNIA

SCALE N/A | BY GRAY | DATE 2-10-72 | APP R. S.

MATERIAL: N/A

TITLE: ASSY LOGIC BOARD

FINISH: N/A

MODEL NO. 132 | DWG NO. 2131-60-0041 | REV C

THIS DOCUMENT CONTAINS PROPRIETARY INFORMATION AND DESIGN RIGHTS BELONGING TO WAVETEK AND MAY NOT BE REPRODUCED FOR ANY REASON EXCEPT CALIBRATION, OPERATION, AND MAINTENANCE WITHOUT WRITTEN AUTHORIZATION.

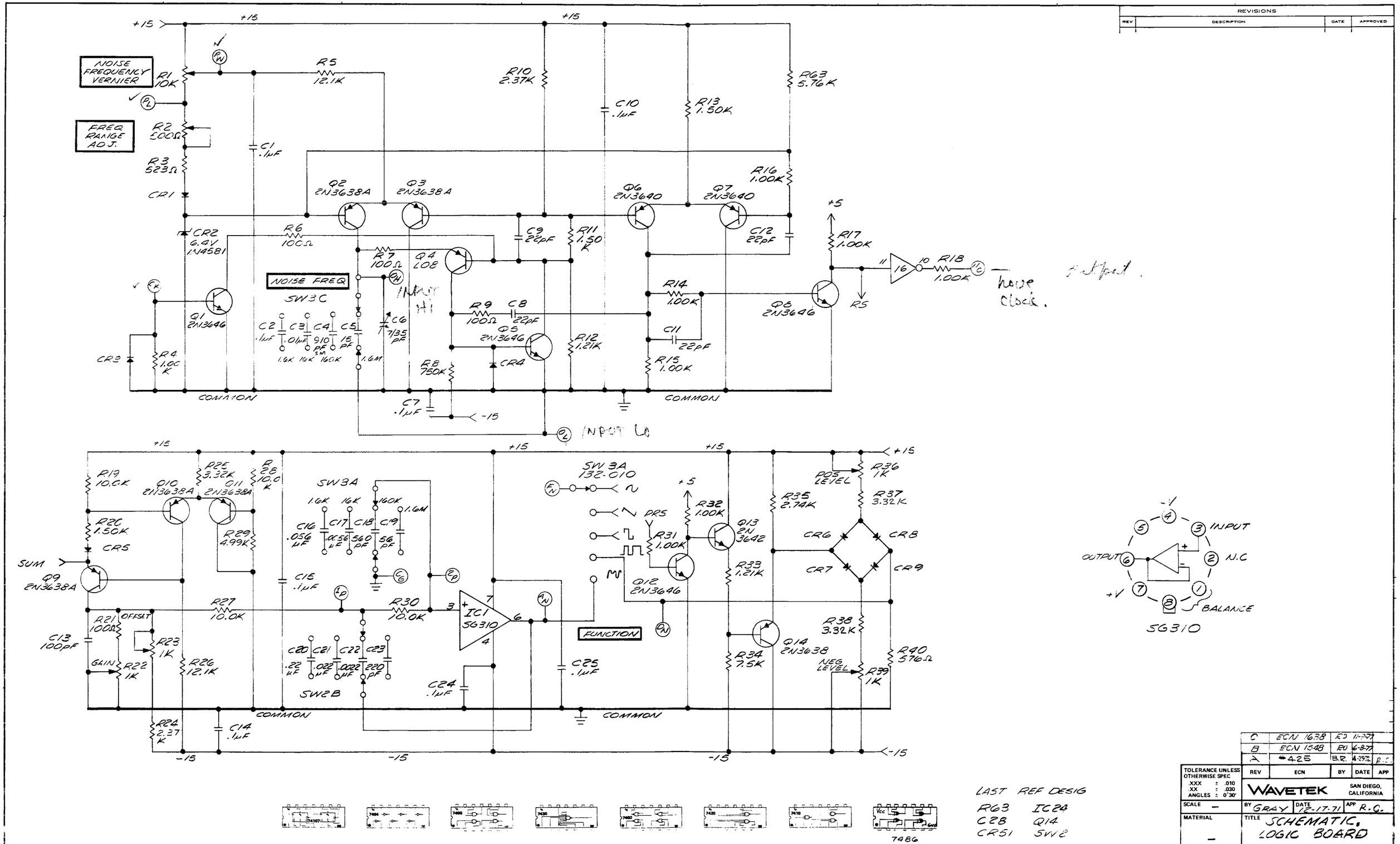

LAST REF DESIG

R63	IC24
C28	Q14
CR51	SW2

2. ALL RESISTORS ARE METAL FILM, 1/8W, 1%
1. ALL DIODES ARE FD6666
NOTES: UNLESS OTHERWISE SPECIFIED

REVISIONS			
REV	DESCRIPTION	DATE	APPROVED

REV	ECN	BY	DATE	APP
C	ECN 1638	RD	11-9-77	
B	ECN 1548	RD	6-8-77	
A	#425	B.R.	4-25-72	R.C.

TOLERANCE UNLESS OTHERWISE SPEC
.XXX ± .010
.XX ± .030
ANGLES ± 0°30'

WAVETEK SAN DIEGO, CALIFORNIA

SCALE –
MATERIAL –
FINISH –

BY GRAY DATE 12-17-71 APP R.C.

TITLE SCHEMATIC, LOGIC BOARD

MODEL NO. 132 DWG NO. SHEET 1 OF 2 0103-00-00541 REV C

THIS DOCUMENT CONTAINS PROPRIETARY INFORMATION AND DESIGN RIGHTS BELONGING TO WAVETEK AND MAY NOT BE REPRODUCED FOR ANY REASON EXCEPT CALIBRATION, OPERATION, AND MAINTENANCE WITHOUT WRITTEN AUTHORIZATION.

REVISIONS			
REV	DESCRIPTION	DATE	APPROVED

IC 2 - 13 SN 74107
IC 14, 16, 19 SN 7404
IC 22, 23 SN 7400
IC 21 SN 7430
IC 20 SN 7402
IC 15 SN 7486
IC 17 SN 7420
IC 18, 24 SN 7410
+5 TO PIN 14 ALL IC'S
GND TO PIN 7 ALL IC'S
NOTES: UNLESS OTHERWISE SPECIFIED

SEE SHEET 1

REV	ECN	BY	DATE	APP
A	# 425	B.R.	4-25-72	R.G.

TOLERANCE UNLESS OTHERWISE SPEC
.XXX ± .010
.XX ± .030
ANGLES ± 0°30'

WAVETEK SAN DIEGO, CALIFORNIA

SCALE –
BY GRAY DATE 12-21-71 APP R.G.
MATERIAL –
TITLE SCHEMATIC, LOGIC BOARD
FINISH –
MODEL NO. 132
DWG NO. SHEET 2 OF 2 0103-00-0041
REV C

THIS DOCUMENT CONTAINS PROPRIETARY INFORMATION AND DESIGN RIGHTS BELONGING TO WAVETEK AND MAY NOT BE REPRODUCED FOR ANY REASON EXCEPT CALIBRATION, OPERATION, AND MAINTENANCE WITHOUT WRITTEN AUTHORIZATION.

THIS DOCUMENT CONTAINS PROPRIETARY INFORMATION AND DESIGN RIGHTS BELONGING TO WAVETEK AND MAY NOT BE REPRODUCED FOR ANY REASON EXCEPT CALIBRATION, OPERATION, AND MAINTENANCE WITHOUT WRITTEN AUTHORIZATION.

REV	ECN	BY	DATE	APP

REFERENCE DESIGNATORS	PART DESCRIPTION	ORIG-MFGR-PART-NO	MFGR	WAVETEK NO.	QTY/PT
NONE	ASSY DRWG, LOGIC	0101-00-0041	WVTK	0101-00-0041	1
NONE	SCHEMATIC,LOGIC	0103-00-0041	WVTK	0103-00-0041	1
T2	TRANSFORMER	132-500	WVTK	1204-00-0482	1
NONE	BRKT	130-306	WVTK	1400-00-1093	1
26	BRKT	132-302	WVTK	1400-00-1633	1
C13	CAP,CER,100PF,1KV	DD-101	CRL	1500-01-0111	1
C01 C07 C10 C14 C15 C24 C25 C26 C27 C28	CAP,CER,,1MF,20V	UK20-104	AMCO	1500-01-0413	10
C08 C09 C11 C12	CAP,CER,22PF,1KV	DD-220	CRL	1500-02-2011	4
C6	VAR1,7-35PF,250V	7S-THIKO-02 7/35 PF	THIKO	1500-53-5000	1
73	LUGIC	132-113	WVTK	1700-00-0041	1
J5 J6	BNC CONN	KC-7946	KING	2100-01-0002	2
75	SKT,IC,14PIN	14-D1F	LINCH	2100-03-0011	23
71	SOLDER LUG	1497	SMITH	2100-04-0012	2
76	PIN,MALE	61182-2	AMP	2100-05-0020	27
77	INSERT # 6	74-11-106-13	SOTCO	2800-09-0017	2
78	FAST,CHASSIS	1541-811	USECO	2800-09-0021	2
79	WASHER,SHOULDER	2668	SMITH	2800-27-0004	4

WAVETEK PARTS LIST	TITLE LOGIC	ASSEMBLY NO. 1100-00-0041	REV C
		PAGE: 1	

REFERENCE DESIGNATORS	PART DESCRIPTION	ORIG-MFGR-PART-NO	MFGR	WAVETEK NO.	QTY/PT
R42 R60	RES,MF,1/8W,1%,294K	RN55D-2943F	TRW	4701-03-2943	2
R25 R37 R38	RES,MF,1/8W,1%,3.32K	RN55D-3321F	TRW	4701-03-3321	3
R46 R56	RES,MF,1/8W,1%,46.4K	RN55D-4642F	TRW	4701-03-4642	2
R29	RES,MF,1/8W,1%,4.99K	RN55D-4991F	TRW	4701-03-4991	1
R3	RES,MF,1/8W,1%,523	RN55D-5230F	TRW	4701-03-5230	1
R40	RES,MF,1/8W,1%,576	RN55D-5760F	TRW	4701-03-5760	1
R63	RES,MF,1/8W,1%,5.76K	RN55D-5761F	TRW	4701-03-5761	1
R34	RES,MF,1/8W,1%,7.5K	RN55D-7501F	TRW	4701-03-7501	1
R41 R61	RES,MF,1/4W,1%,432K	RN60D-4323F	TRW	4701-13-4323	2
R8	RES,MF,1/4W,1%,750K	RN60D-7503F	TRW	4701-13-7503	1
CR2	DIODE	1N4581	MICRO	4801-01-4581	1
CR03 CR04 CR05 CR06 CR07 CR08 CR09 CR1 CR10 CR11 CR12 CR13 CR14 CR15 CR16 CR17 CR18 CR19 CR20 CR21 CR22 CR23 CR24 CR25 CR26 CR27 CR28 CR29 CR30 CR31 CR32 CR33 CR34 CR35 CR36 CR37 CR38 CR39 CR40 CR41 CR42 CR43 CR44 CR45 CR46 CR47 CR48 CR49 CR50 CR51	DIODE	FD-6666	FAIR	4807-02-6666	50

WAVETEK PARTS LIST	TITLE LOGIC	ASSEMBLY NO. 1100-00-0041	REV C
		PAGE: 3	

REFERENCE DESIGNATORS	PART DESCRIPTION	ORIG-MFGR-PART-NO	MFGR	WAVETEK NO.	QTY/PT
R22 R23 R36 R39	POT,TRIM,1K	91AR1K	BECK	4600-01-0209	4
R2	POT,TRIM,500	91AR500	BECK	4600-05-0104	1
R06 R07 R09 R21	RES,MF,1/8W,1%,100	RN55D-1000F	TRW	4701-03-1000	4
R04 R14 R15 R16 R17 R18 R31 R32 R62	RES,MF,1/8W,1%,1K	RN55D-1001F	TRW	4701-03-1001	9
R19 R27 R28 R30 R51	RES,MF,1/8W,1%,10K	RN55D-1002F	TRW	4701-03-1002	5
R50 R52	RES,MF,1/8W,1%,10.5K	RN55D-1052F	TRW	4701-03-1052	2
R12 R33	RES,MF,1/8W,1%,1.21K	RN55D-1211F	TRW	4701-03-1211	2
R65 R66	RES,MF,1/8W,1%,12.1K	RN55D-1212F	TRW	4701-03-1212	2
R49 R55	RES,MF,1/8W,1%,12.4K	RN55D-1242F	TRW	4701-03-1242	2
R45 R57	RES,MF,1/8W,1%,124K	RN55D-1243F	TRW	4701-03-1243	2
R11 R13 R20	RES,MF,1/8W,1%,1.5K	RN55D-1501F	TRW	4701-03-1501	3
R48 R54	RES,MF,1/8W,1%,16.5K	RN55D-1652F	TRW	4701-03-1652	2
R10 R24	RES,MF,1/8W,1%,2.37K	RN55D-2371F	TRW	4701-03-2371	2
R43 R59	RES,MF,1/8W,1%,243K	RN55D-2433F	TRW	4701-03-2433	2
R47 R53	RES,MF,1/8W,1%,24.9K	RN55D-2492F	TRW	4701-03-2492	2
R35	RES,MF,1/8W,1%,2.74K	RN55D-2741F	TRW	4701-03-2741	1
R44 R58	RES,MF,1/8W,1%,287K	RN55D-2873F	TRW	4701-03-2873	2

WAVETEK PARTS LIST	TITLE LOGIC	ASSEMBLY NO. 1100-00-0041	REV C
		PAGE: 2	

REFERENCE DESIGNATORS	PART DESCRIPTION	ORIG-MFGR-PART-NO	MFGR	WAVETEK NO.	QTY/PT
Q10 Q11 Q14 Q2 Q3 Q4	TRANS	2N5838A	FAIR	4901-05-0381	6
Q6 Q7	TRANS	2N3640	FAIR	4901-03-6400	2
Q13	TRANS	2N3642	FAIR	4901-03-6420	1
Q1 Q12 Q5 Q8	TRANS	2N3646	FAIR	4901-03-6460	4
Q9	TRANS	MPS-L08	FAIR	4902-00-0080	1
IC1	IC	7000-03-1000	WVTK	7000-03-1000	1
IC22 IC23	IC	7400	TI	8000-74-0000	2
IC20	IC	7402	TI	8000-74-0200	1
IC14 IC16 IC19	IC	7404	TI	8000-74-0400	5
IC18 IC24	IC	7410	TI	8000-74-1000	2
IC17	IC	7420	TI	8000-74-2000	1
IC21	IC	7430	TI	8000-74-3000	1
IC15	IC	7486	TI	8000-74-8600	1
IC02 IC03 IC04 IC05 IC06 IC07 IC08 IC09 IC10 IC11 IC12 IC13	IC	74107	TI	8007-41-0700	12

WAVETEK PARTS LIST	TITLE LOGIC	ASSEMBLY NO. 1100-00-0041	REV C
		PAGE: 4	

NOTE UNLESS OTHERWISE SPECIFIED

REMOVE ALL BURRS AND BREAK SHARP EDGES	DRAWN	DATE	WAVETEK SAN DIEGO • CALIFORNIA
MATERIAL	PROJ ENGR		TITLE: LOGIC
FINISH WAVETEK PROCESS	RELEASE APPROV.		
	TOLERANCE UNLESS OTHERWISE SPECIFIED .XXX ±.010 ANGLES ±1 .XX ±.030		
	DO NOT SCALE DWG		MODEL NO. 132 / DWG NO. 1100-00-0041 / REV C
	SCALE		CODE IDENT. 23338 / SHEET / OF

THIS DOCUMENT CONTAINS PROPRIETARY INFORMATION AND DESIGN RIGHTS BELONGING TO WAVETEK AND MAY NOT BE REPRODUCED FOR ANY REASON EXCEPT CALIBRATION, OPERATION, AND MAINTENANCE WITHOUT WRITTEN AUTHORIZATION.

REV	ECN	BY	DATE	APP

REFERENCE DESIGNATORS	PART DESCRIPTION	ORIG-MFGR-PART-NO	MFGR	WAVETEK NO.	QTY/PT
R7	RES,MF,1/8W,1%,249	RN55D-2490F	TRW	4701-03-2490	1
R3	RES,MF,1/8W,1%,27.4	RN55D-27R4F	TRW	4701-03-2749	1
R4	RES,MF,1/8W,1%,54.9	RN55D-54R9F	TRW	4701-03-5499	1
R13 R5	RES,MF,1/8W,1%,59	RN55D-59R0F	TRW	4701-03-5909	2
R11	RES,MF,1/8W,1%,61.9	RN55D-61R9F	TRW	4701-03-6199	1
R06 R12	RES,MF,1/8W,1%,825	RN55D-8250F	TRW	4701-03-8250	2
R1 R10 R2 R9	RES,MF,1/4W,1%,196	RN60D-1960F	TRW	4701-13-1960	4
R8	RES,MF,1/4W,1%,71.5	RN60D-71R5F	TRW	4701-13-7159	1
13	SWITCH ASSY ROTARY	156-SM16	WVTK	5104-00-0016	1

WAVETEK PARTS LIST	TITLE ATTEN SW ASSY	ASSEMBLY NO. 1202-00-0008 PAGE: 1	REV B

NOTE: UNLESS OTHERWISE SPECIFIED

REMOVE ALL BURRS AND BREAK SHARP EDGES	DRAWN	DATE	WAVETEK SAN DIEGO • CALIFORNIA
MATERIAL	PROJ ENGR		TITLE OUT PUT ATTEN SW ASSY
	RELEASE APPROV		
FINISH WAVETEK PROCESS	TOLERANCE UNLESS OTHERWISE SPECIFIED .XXX ±.010 ANGLES ±1° .XX ±.030		
	DO NOT SCALE DWG	MODEL NO. 132	DWG NO. 1202-00-0008 REV B
	SCALE	CODE IDENT. 23338	SHEET 1 OF 3

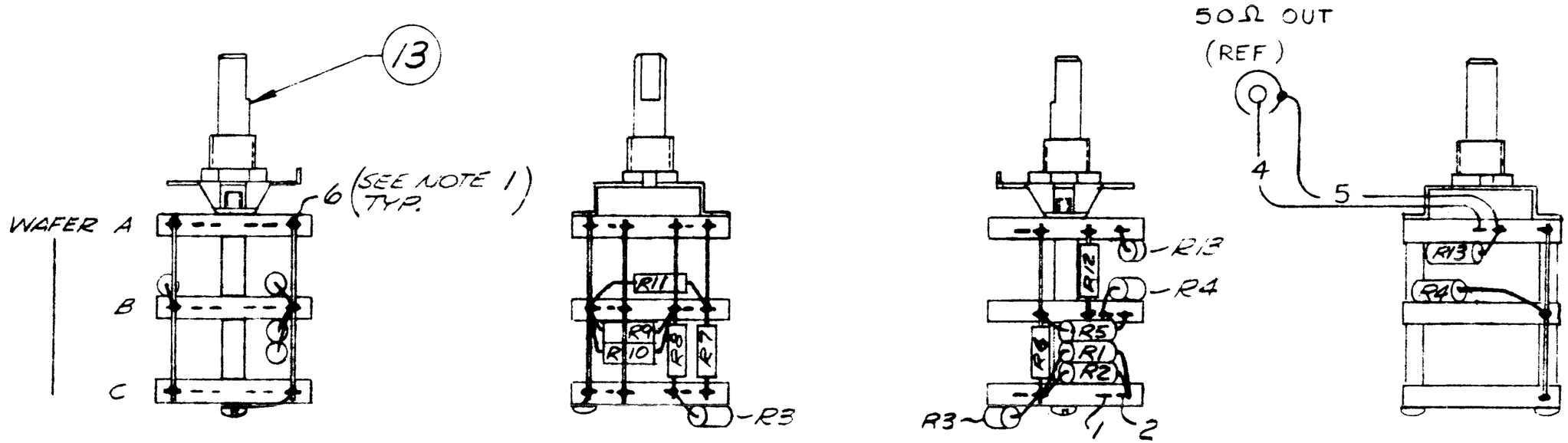

NOTES: UNLESS OTHERWISE SPECIFIED

1) NUMBERS INDICATE WIRE TERMINATION POINTS.

REV	ECN	BY	DATE	APP
B	ECN 308	S	11/17/77	S
A	ECN 321	N G	11/12/77	

TOLERANCE UNLESS OTHERWISE SPECIFIED
XXX .010
XX .030
ANGLES 0.30

WAVETEK SAN DIEGO CALIF

SCALE N/A | BY BO | DATE 5-20 | APP K S

MATERIAL N/A

TITLE ASSEMBLY, ATTENUATOR SH 2 OF 2

MODEL NO 142/144 | DWG NO 1202-00-0008 | REV B

FINISH N/A

THIS DOCUMENT CONTAINS INFORMATION AND DESIGN RIGHTS BELONGING TO WAVETEK AND MAY NOT BE REPRODUCED OR USED FOR REASON EXCEPT CALIBRATION, OPERATION, MAINTENANCE WITHOUT WRITTEN PERMISSION.

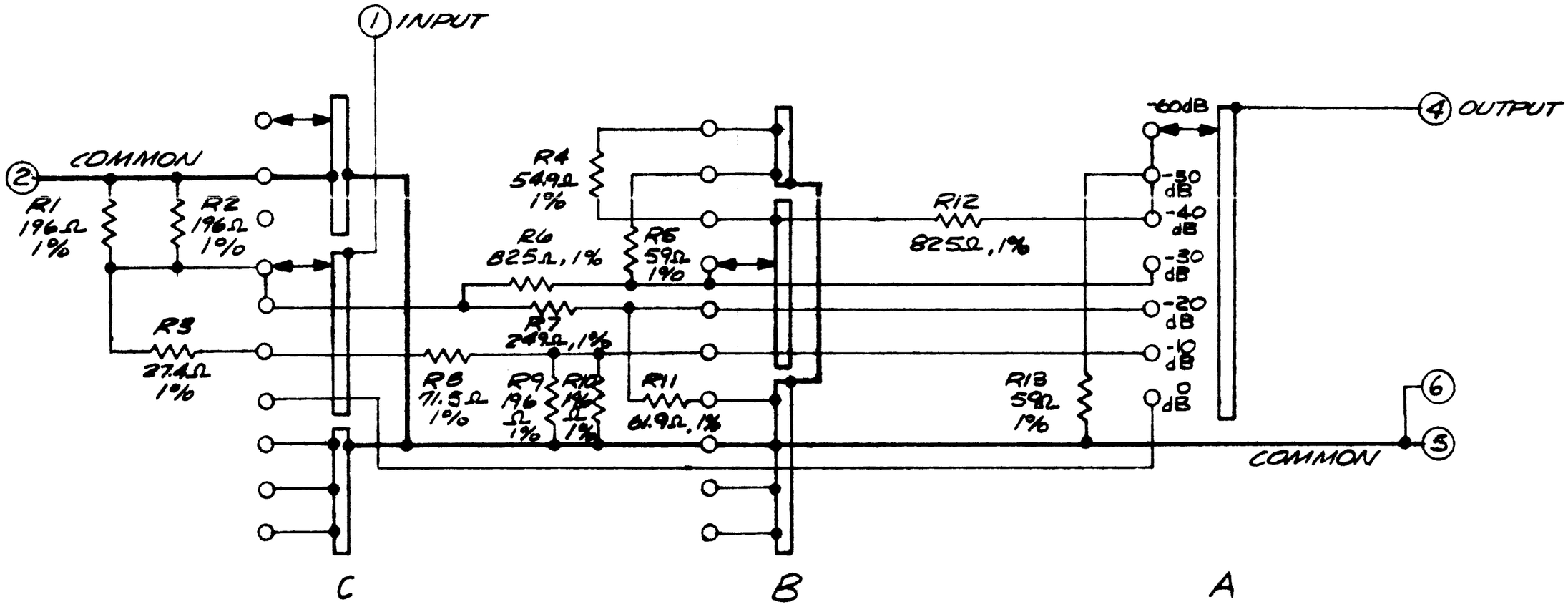

NOTES: UNLESS OTHERWISE SPECIFIED

1. CIRCLED NUMBERS, I.E. (1) ETC, INDICATE WIRING INTERCONNECTIONS.

REV	ECN	BY	DATE	APP
B	UPDATE TO COMPUTER SYS	BJ		
A	ECN 321			

TOLERANCE UNLESS OTHERWISE SPEC
.XX ± .010
.XX ± .030
ANGLES ± 0°30'

WAVETEK SAN DIEGO, CALIF

SCALE
MATERIAL
FINISH

BY
DATE
APP

TITLE SCHEMATIC, ATTENUATOR

MODEL NO. 1444
DWG NO. A202-00-0008
SH 3 OF 3
REV. B

THIS DOCUMENT CONTAINS [redacted] MATION AND DESIGN [redacted] WAVETEK AND MAY NOT [redacted] REASON EXCEPT CALIBRATION [redacted] MAINTENANCE WITHOUT [redacted]

THIS DOCUMENT CONTAINS PROPRIETARY INFORMATION AND DESIGN RIGHTS BELONGING TO WAVETEK AND MAY NOT BE REPRODUCED FOR ANY REASON EXCEPT CALIBRATION, OPERATION, AND MAINTENANCE WITHOUT WRITTEN AUTHORIZATION.

REV	ECN	BY	DATE	APP

REFERENCE DESIGNATORS	PART DESCRIPTION	OMIG-MFGR-PART-NO	MFGR	WAVETEK NO.	QTY/PT
R8	RES,MF,1/8W,1%,10	RN55D-10R0F	TRW	4701-03-1009	1
R3 R9	RES,MF,1/8W,1%,215	RN55D-2150F	TRW	4701-03-2159	2
R6	RES,MF,1/8W,1%,21.5	RN55D-21R5F	TRW	4701-03-2159	1
R2 R7	RES,MF,1/8W,1%,681	RN55D-6810F	TRW	4701-03-6810	2
R05 R10	RES,MF,1/8W,1%,68.1	RN55D-68R1F	TRW	4701-03-6819	2
1	SWITCH ASSY ROTARY	132-SA2	WVTK	5104-00-0014	1
3	SWITCH STOP	212-33-006	CTS	5104-07-0002	1

WAVETEK PARTS LIST	TITLE ATTEN SW ASSY	ASSEMBLY NO. 1202-00-0003 PAGE: 1	REV

NOTE: UNLESS OTHERWISE SPECIFIED

REMOVE ALL BURRS AND BREAK SHARP EDGES	DRAWN	DATE	WAVETEK SAN DIEGO • CALIFORNIA
MATERIAL	PROJ ENGR		TITLE S/N - N/S ATTEN SW ASSY
	RELEASE APPROV		
FINISH WAVETEK PROCESS	TOLERANCE UNLESS OTHERWISE SPECIFIED XXX ±.010 ANGLES ±1 XX ±.030		MODEL NO 132 / DWG NO 1202-00-0003 / REV
	DO NOT SCALE DWG		
	SCALE		CODE IDENT 23338 / SHEET 1 OF 3

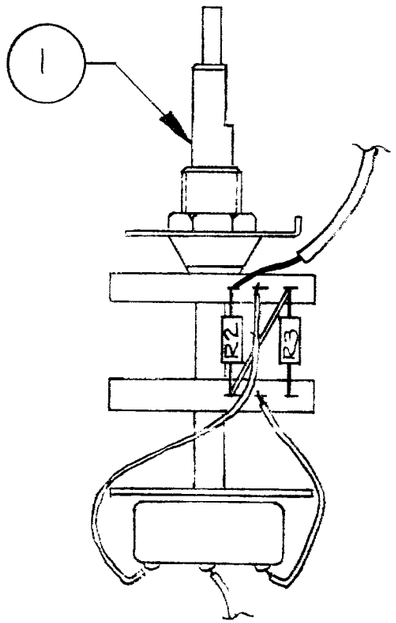

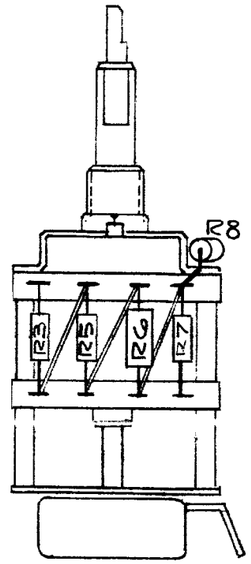

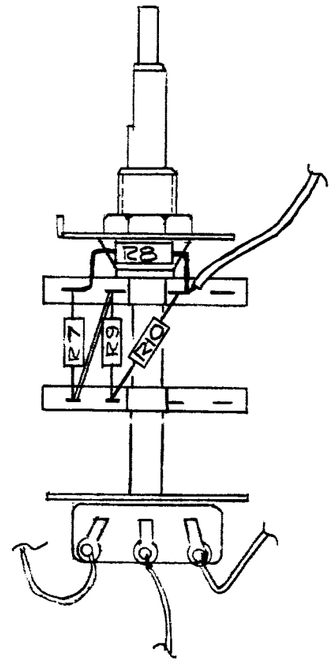

N/A	B. REDMAN 2-2-72 R. C.
N/A	SWITCH ASSY, S/N ATTN
	132 1202-00-C003 2 of 3
N/A	

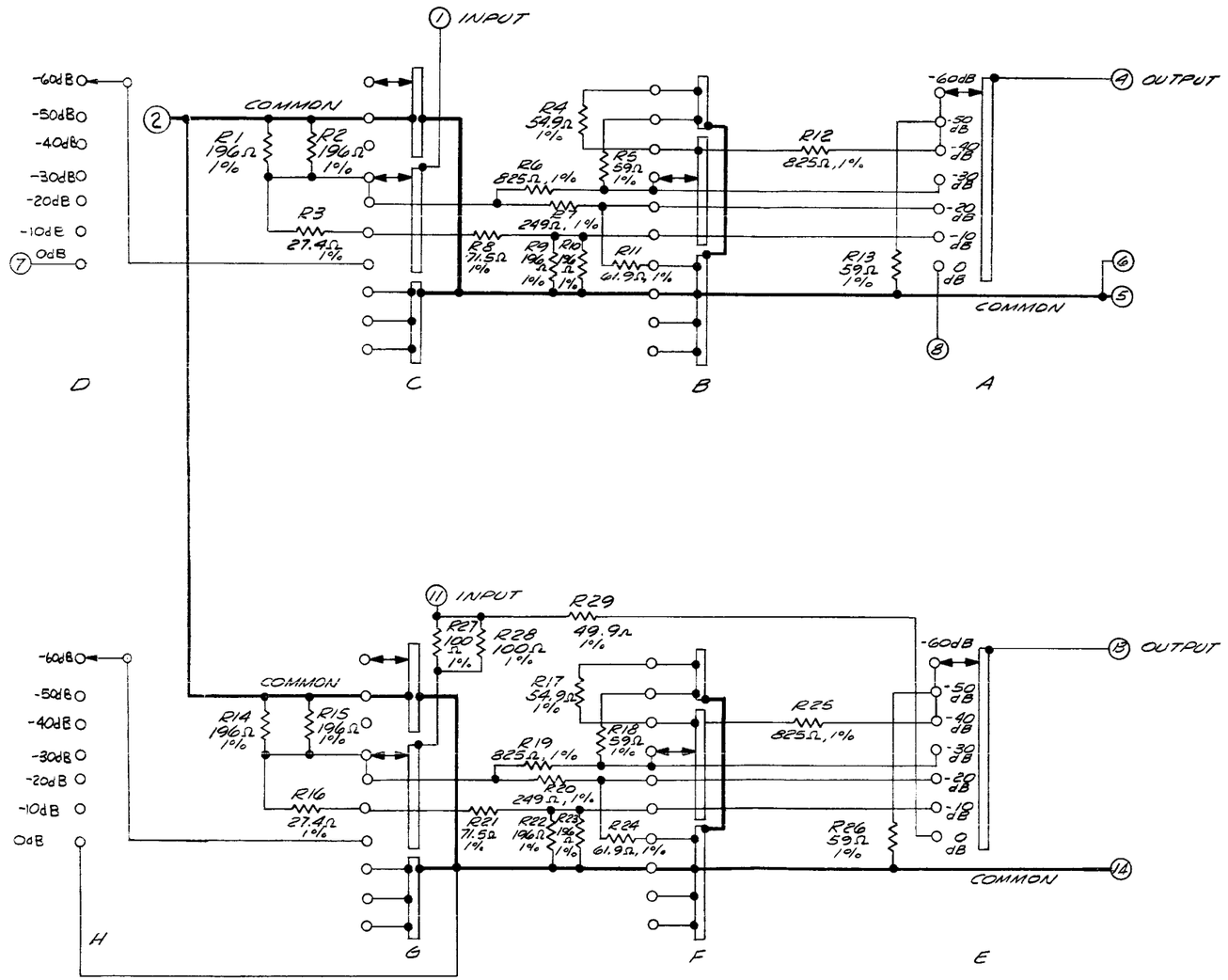

NOTES: UNLESS OTHERWISE SPECIFIED

1. CIRCLED NUMBERS, I.E. (1) ETC, INDICATE WIRING INTERCONNECTIONS.
2. SEE SCHEMATIC 131A-200

	VANTEK
N/A	GRAY 12-12-71
N/A	SCHEMATIC ATTENUATOR
	131A 1202-00-0003
N/A	

THIS DOCUMENT CONTAINS PROPRIETARY INFORMATION AND DESIGN RIGHTS BELONGING TO WAVETEK AND MAY NOT BE REPRODUCED FOR ANY PURPOSE EXCEPT CALIBRATION, OPERATION, AND MAINTENANCE WITHOUT WRITTEN AUTHORIZATION.

REV	ECN	BY	DATE	APP

REFERENCE DESIGNATORS	PART DESCRIPTION	DWG-MFGR-PART-NO	MFGR	WAVETEK NO.	QTY/PT
NONE	SCHEMATIC,LOGIC	0103-00-0041	WVTK	0103-00-0041	1
C5	CAP,MICA,15PF,500V	DM15-150J	ARCO	1500-11-5000	1
C23	CAP,MICA,220PF,500V	DM15-221J	ARCO	1500-12-2100	1
C19	CAP,MICA,56PF,500V	DM15-560J	ARCO	1500-15-6000	1
C18	CAP,MICA,560PF,500V	DM15-561J	ARCO	1500-15-6100	1
C4	CAP,MICA,910PF,500V	DM15-911F	ARCO	1500-19-1101	1
C3	CAP,POLYC,.01MF,100V	PA26103F	IMB	1500-41-0304	1
C2	CAP,POLYC,.1MF,100V	PA26104F	IMB	1500-41-0404	1
C22	POLYC,.0022MF,200V	192P22292	SPRAG	1500-42-2204	1
C21	POLYC,.0033MF,200V	192P33292	SPRAG	1500-42-2304	1
C20	CAP,POLYE,.22MF,80V	192P22494R8	SPRAG	1500-42-2403	1
C17	POLYE,.0056MF,200V	192P56292	SPRAG	1500-45-6204	1
C16	POLY,.056MF,200V	192P56392	SPRAG	1500-45-6304	1
1	SWITCH ASSY ROTARY	132-563	WVTK	5104-00-0015	1
3	SWITCH STOP	212-33-006	CTS	5104-07-0002	1

WAVETEK PARTS LIST	TITLE FREQ SW ASSY	ASSEMBLY NO. 1202-00-0004 PAGE: 1	REV B

NOTE UNLESS OTHERWISE SPECIFIED

REMOVE ALL BURRS AND BREAK SHARP EDGES	DRAWN	DATE	WAVETEK SAN DIEGO • CALIFORNIA
MATERIAL	PROJ ENGR		TITLE FREQ SW ASSY
	RELEASE APPROV		
FINISH WAVETEK PROCESS	TOLERANCE UNLESS OTHERWISE SPECIFIED .XXX ±.010 ANGLES ±1° .XX ±.030		MODEL NO. 132 / DWG NO. 1202-00-0004 / REV B
	DO NOT SCALE DWG		CODE IDENT 23338 / SHEET OF
	SCALE		

REVISIONS			
REV	DESCRIPTION	DATE	APPROVED

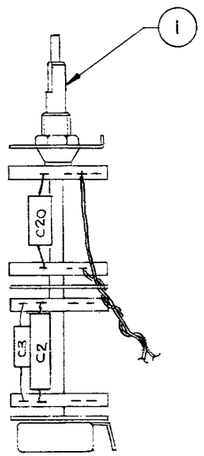

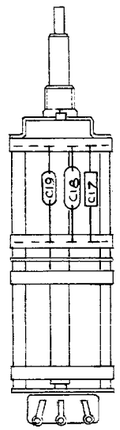

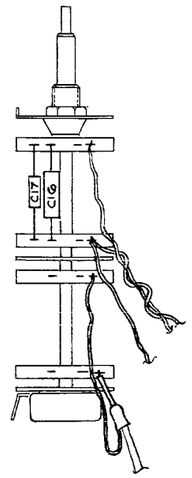

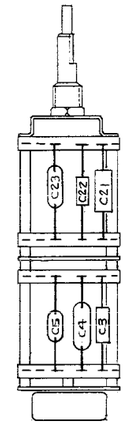

B	ECN 15-3	RR	5-3-7
A	#425	BR	1-25-7

TOLERANCE UNLESS OTHERWISE SPEC	REV	ECN	BY	DATE	APP
.XXX ± .010 .XX ± .030 ANGLES ± 0°30'	WAVETEK		SAN DIEGO, CALIFORNIA		
SCALE N/A	BY B. REDMAN	DATE 2-2-72	APP R. C.		
MATERIAL N/A	TITLE SWITCH ASSY; FREQ RG				
FINISH N/A	MODEL NO. 132	DWG NO. 1202-CC-0004	REV B		

THIS DOCUMENT CONTAINS PROPRIETARY INFORMATION AND DESIGN RIGHTS BELONGING TO WAVETEK AND MAY NOT BE REPRODUCED FOR ANY REASON EXCEPT CALIBRATION, OPERATION, AND MAINTENANCE WITHOUT WRITTEN AUTHORIZATION.

9045 Balboa Ave., San Diego, California Tel. 279-2200, P.O. Box 651, San Diego, California 92112