KONICA MINOLTA

Illuminance Spectrophotometer

CL-700A

Advanced, High-Speed, Multi-Point Light Measurement for Diverse Industries

The Standard in Measuring Color & Light

Giving Shape to Ideas

CL-700A

High-Precision, Multi-Point Spectral Analysis and Illuminance Measurement in a Compact, Integrable Platform

Engineered for environments demanding precise, rapid, and versatile light measurement, the CL-700A delivers advanced spectral analysis, broad illuminance coverage, and efficient multi-point capability—all in a compact, easily integrated design. Unlock reliable results and streamlined workflows with the CL-700A's powerful performance and intuitive operation.

Functions and features that make **your daily work faster and easier**

1 - Wide Wavelength Range: From Visible to NIR

2 - Wide Illuminance Measuring Range

3 - High-Speed Measurement for Improved Efficiency

4 - Multi-Point Measurement with Up to 15 Units

5 - Compact Design for Flexible Integration

6 - CL-S30 Software Included: Real-Time Control and Visualization for CL-700A

1- Wide Wavelength Range: From Visible to NIR

The CL-700A offers spectroscopic measurement capabilities across a wide wavelength range, from visible light to near-infrared (360nm–1,000nm). This enables precise evaluation of LEDs, lighting, projectors, image sensors, smartphone cameras, AR/VR devices, security systems and more.

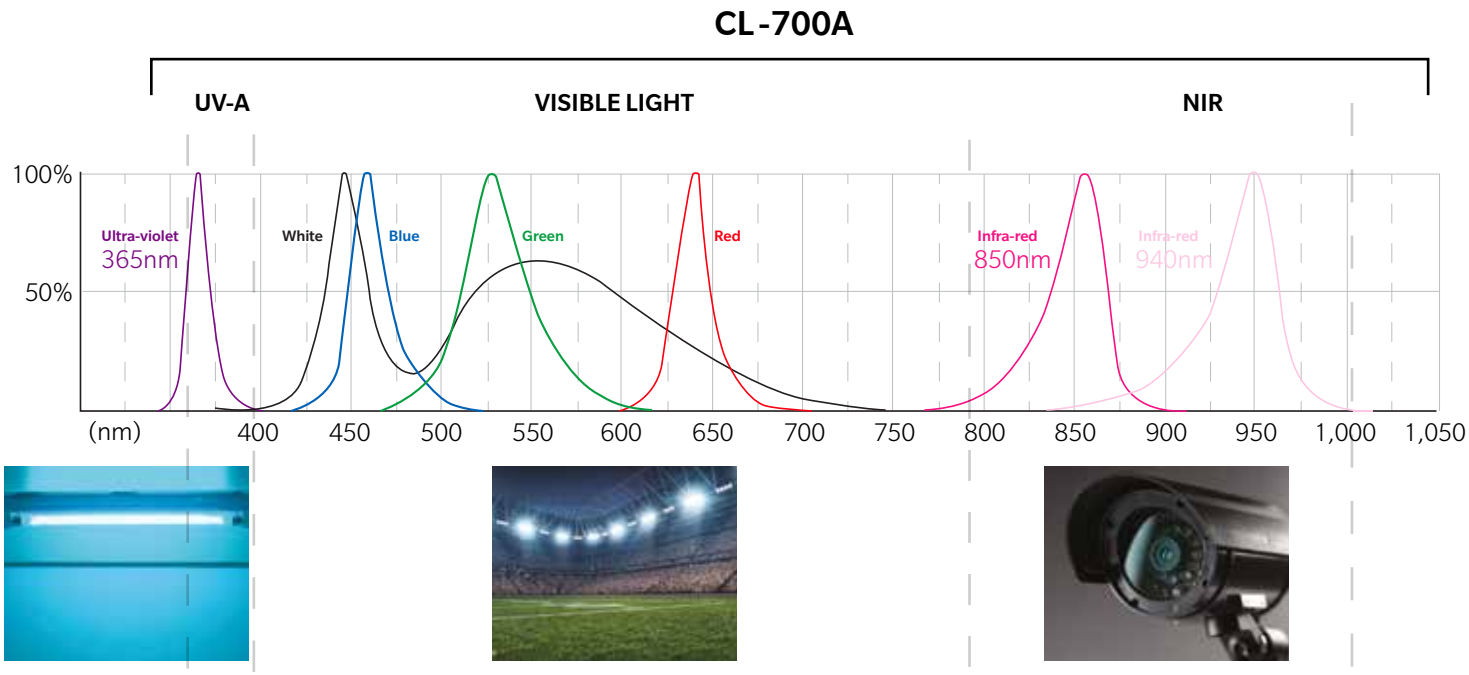

2 - Wide Illuminance Measuring Range

The device supports a wide illuminance range from 0.01 lx to 200,000 lx, enabling accurate evaluation from weak light sources to high-brightness environments.

a) Ultra-Low Illuminance (0.01 lx and above)

- Evaluation of weak light sources in darkrooms or nighttime environments
- Low-light performance testing of smartphone cameras
- Low-illuminance response evaluation of image sensors
- Inspection and illuminance measurement of industrial light sources (including 360 nm)

b) Medium Illuminance (Tens to Thousands of lx)

- Uniformity evaluation of indoor lighting
- ANSI lumen measurement of projectors
- Uniformity evaluation using multi-point setups

c) High Illuminance (Tens of Thousands to 200,000 lx)

- Illuminance evaluation of outdoor lighting (e.g., stadiums, streetlights)
- Peak illuminance measurement of industrial LED sources
- Evaluation of lighting for agriculture and plant factories

3 - High-Speed Measurement for Improved Efficiency

With the ability to measure as low as 0.01 lx in just 5 seconds, the CL-700A excels in low-light environments, making it ideal for projector and NIR measurements.

4 - Multi-Point Measurement with Up to 15 Units

CL-700A enables simultaneous measurement at up to 15 distinct locations, allowing for comprehensive evaluation of both illuminance and color distribution across wide or complex areas. This capability is particularly valuable for applications such as projector calibration, stadium and road lighting, and large-scale architectural or industrial environments, where uniformity and consistency are critical. By capturing synchronized data from multiple points in a single operation, users can efficiently analyze spatial variations, identify inconsistencies, and ensure compliance with stringent lighting standards.

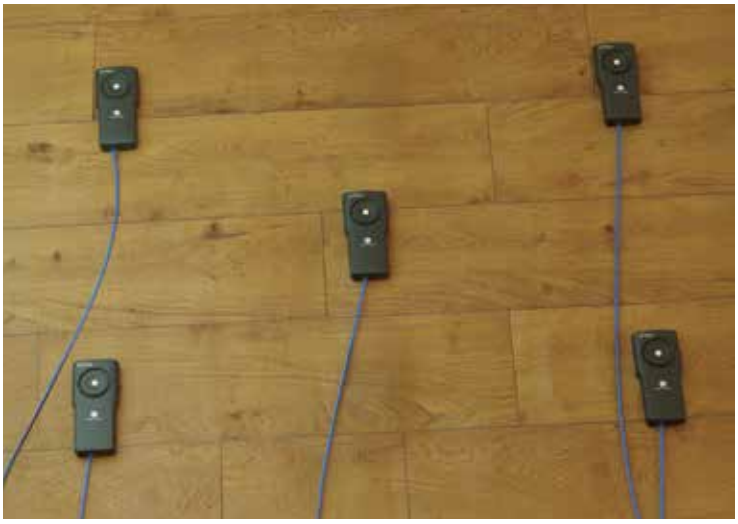

5 - Compact Design for Flexible Integration

The lightweight and compact CL-700A is engineered for seamless integration into inspection and manufacturing equipment. Its small footprint allows it to be embedded directly into a variety of automated systems—including inkjet printers, exposure machines, and more—making it ideal for space-constrained or specialized industrial environments. It can be incorporated into automated workflows for continuous, unattended measurement and real-time data acquisition as part of a larger system.

6 - CL-S30 Software Included: Real-Time Control and Visualization for CL-700A

The CL-700A comes equipped with CL-S30, a dedicated measurement software that offers complete device control, real-time visualization of optical data, chromaticity diagrams, and spectral distributions, along with simple options for data output and storage.

CL-700A

Universal Lighting Measurement for Diverse Industries

Stadium lighting

Achieve flawless stadium illumination with the CL-700A. Its advanced spectral analysis and multi-point measurement capabilities ensure uniform brightness and color across vast venues, helping you meet international standards and deliver an exceptional experience for every event.

Studio lighting

Elevate your studio lighting precision with the CL-700A. Rapid, accurate measurements across a wide illuminance range empower you to create optimal lighting environments for broadcast, photography, and production—ensuring every detail is perfectly captured.

Architectural lighting

Transform architectural spaces with confidence using the CL-700A. Its broad wavelength coverage and efficient multi-point analysis enable designers and engineers to verify lighting quality, enhance aesthetics, and ensure compliance with design specifications.

Street lighting

Optimize public safety and energy efficiency with the CL-700A. Its high-speed, low-light measurement and wide illuminance range allow for thorough evaluation of street lighting installations, ensuring consistent performance and reliable illumination in any environment.

Horticulture

Maximize plant growth and yield with the CL-700A. Its precise spectral measurement capabilities help you fine-tune lighting conditions for horticultural applications, supporting healthy development and efficient energy use in controlled environments.

Illuminance & Color Calibration of Mobile Devices

Advance smartphone camera innovation with the CL-700A. Its ability to measure both visible and near-infrared light, combined with rapid, multi-point analysis, enables accurate sensor calibration and quality assurance for next-generation imaging technologies.

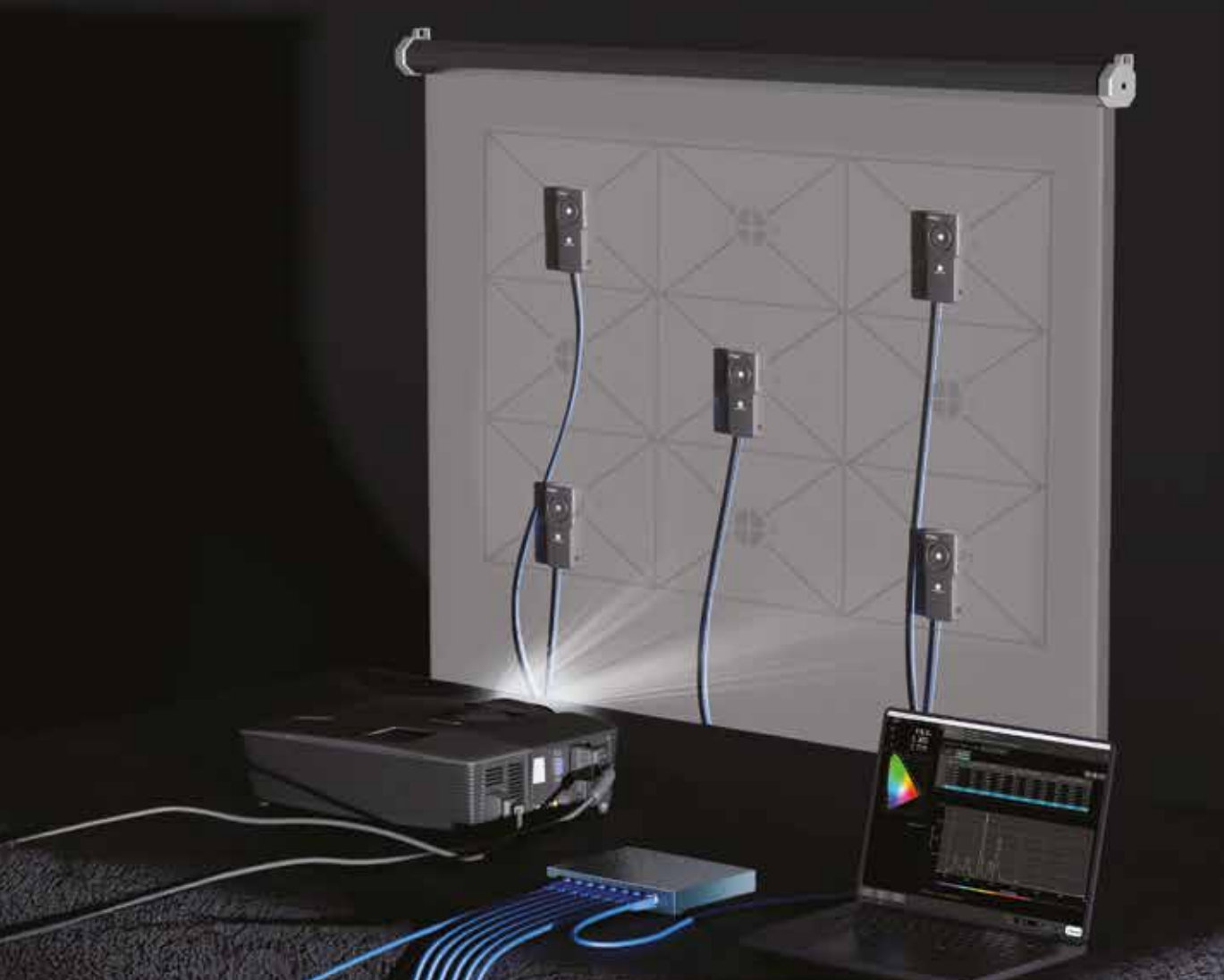

CL-700A
Specifications

Model	Illuminance Spectrophotometer CL-700A
Illuminance meter class	Complies with JIS C 1609-1:2006 Special type illuminance measuring instruments *1 Complies with DIN 5032-7:1985 classB *2
Wavelength range	360 to 1000 nm
Output wavelength pitch	1 nm
Spectral bandwidth	Approx. 10 nm (half bandwidth)
Wavelength precision *3	±0.3 nm (Centroid wavelengths of 435.8 nm, 546.1 nm, 696.5 nm, and 912.3 nm as specified in JIS Z 8724:2015)
Measuring range	0.01 to 200,000 lx (chromaticity accuracy guaranteed range is 0.5lx or more)
Accuracy *4 (Standard Illuminant A)	Ev (Illuminance) : ±2%±1 digit of displayed value xy: ±0.0015 (5 to 200,000 lx) xy: ±0.003 (0.5 to 5 lx)
Repeatability (2σ) *4 (Standard Illuminant A)	xy: 0.0005 (50 to 200,000 lx) xy: 0.001 (10 to 50 lx) xy: 0.002 (5 to 10 lx) xy: 0.004 (0.5 to 5 lx)
V(λ) mismatch (f_1')	Within 1.5% of spectral luminous efficiency V (λ)
Directional response (f_2)	Ev: Within 3%
Temperature dependence (f_T)	Ev: ±3% xy: ±0.003
Humidity resistance (f_H)	Ev: ±3% xy: ±0.003
Measurement time *5	Super FAST mode: Within 0.3 seconds FAST mode: Within 0.5 seconds NORMAL mode: Approximately 0.5 to 5 seconds
Measurement function	X,Y,Z Ev,x,y u',v' Tcp (Correlated color temperature), duv λd (Dominant wavelength), Pe (Excitation purity) Ra (General color-rendering index) Ri (i=1~15) (Special color-rendering indexes) TM-30-20 (when using CL-S30) *6 TLCI (when using CL-S30) *6 SDCM (when using CL-S30) *6 Ev',S/P EML(Equivalent Melanopic Lux) PPFD Ee(Irradiance) (when using CL-S30) *6 Ee(λ) (Spectral irradiance) Spectral graph, Peak wavelength *6
Other functions	Automatic zero calibration/wavelength correction User calibration data input/output *6 Averaged measurement Continuous measurement (when using CL-S30) *6 Multi-point measurement (up to 15 units) *6 Color matching functions: CIE 1931(2° Standard Observer), CIE1964(10° Standard Observer), CIE170-2(2°), CIE170-2(10°)
Display languages	English, Japanese, Simplified Chinese
Interface	USB 2.0, Ethernet
Power	USB bus power (when using USB), PoE (when using Ethernet, compliant with IEEE 802.3af)
Operation temperature / humidity range	0 to 40°C, relative humidity of 85% or less (at 35°C) with no condensation
Storage temperature / humidity range	-10 to 45°C, relative humidity of 85% or less (at 35°C) with no condensation
Size (W × H × D)	80 × 170.5 × 35 mm
Weight	Approx.214 g

* **1** This instrument does not comply with the following requirements for JIS C1609-1:2006 General type AA class illuminance meters:
  - When Speed Mode is set to NORMAL mode, Range 7-10 do not comply with "5.5 Display characteristics (response time)"
  - Temperatures below 0°C are outside the Operation temperature range, non-compliant with "5.7 Temperature characteristics"
  - No display, non-compliant with "6.3 Display"
  All other requirements are compliant.
* **2** Within an illuminance range of 1 lx or higher
* **3** Based on Konica Minolta test standards (temperature change ≤2°C after zero calibration).
* **4** NORMAL mode (at 23°C ±2°C, relative humidity ≤75%).
* **5** The measurement time is the value under the following conditions:
  - Time from measurement request from the operating terminal to completion of result reception from the measuring instrument
  - When connected via USB
  - Super FAST mode when Manual range setting is active
  - When Buzzer Drive Mode is OFF
  Note: When 15 points are connected (via Ethernet), the measurement time is within measurement time shown + 1 second
* **6** CL-S30 can be used when connected. There are no communication commands to execute these functions

- KONICA MINOLTA, the Konica Minolta logo and symbol mark, and "Giving Shape to ideas" are registered trademarks or trademarks of KONICA MINOLTA, INC.
- Windows® and Excel® are trademarks of Microsoft Corporation in the USA and other countries.

- The specifications and appearance shown herein are subject to change without notice.
- Screens shown are for illustration purpose only.
- Some lamp control methods may make accurate measurements difficult. For details, please contact your nearest Konica Minolta sales office or dealer

Dimensions
& System Diagram

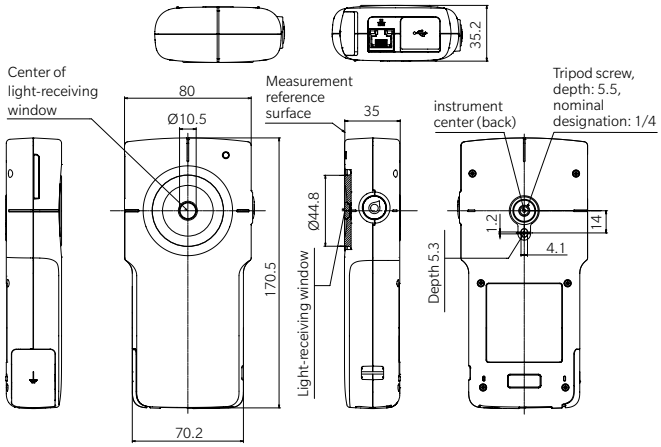

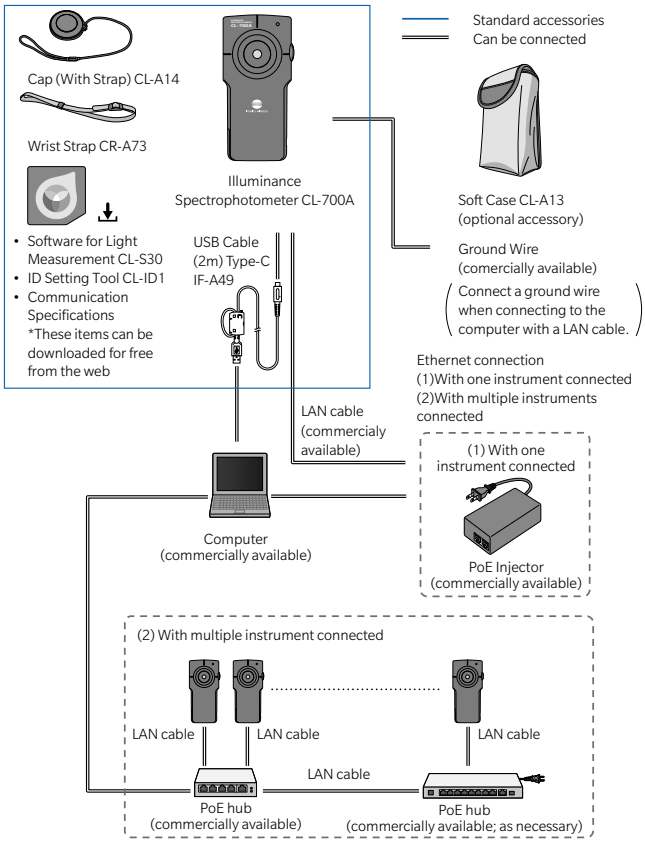

System requirements	Software for Light Measurement CL-S30
OS	Windows® 11 Pro 64bit, macOS® Ventura, macOS® Sonoma • The required computer system configuration is the recommended configuration for the operating system above or the specifications below (whichever is more advanced).
CPU	At least as advanced as the Intel® Core™ i Series At least as advanced as the Apple Silicon M1 chip
Memory	8 GB or more (16 GB or more is recommended if the total number of measurements [number of connected instruments × maximum number of measurements] exceeds 40,000.)
Storage	At least 100 MB of free space. At least 50 MB of the hard disk's free space needs to be on the system drive (the drive where the operating system is installed).
Display resolution	Must support at least 1,280 × 768 pixel, 16 bit color display
Other	USB port supporting at least USB 2.0 is needed for instrument connection A connection to the internet is needed to download software A CAT6A cable is needed when connecting over Ethernet
Display language	English, Japanese, Simplified Chinese

SAFETY PRECAUTIONS

For correct use and for your safety, be sure to read the instruction manual before using the instrument.

- Always connect the instrument to the specified power supply voltage. Improper connection may cause a fire or electric shock.

ISO Certifications of KONICA MINOLTA, Inc., Sakai Site

ISO 9001
JQA-QMA15888
Design, development, manufacture/manufacturing management, calibration, and service of measuring instruments

ISO 14001
JQA-E-80027
Design, development, manufacture, service and sales of measuring instruments

CONTACT US-Global Network

https://www.konicaminolta.com/instruments/network/

©2025 KONICA MINOLTA, INC.

9242-AF5U-41 CFLXZ-1